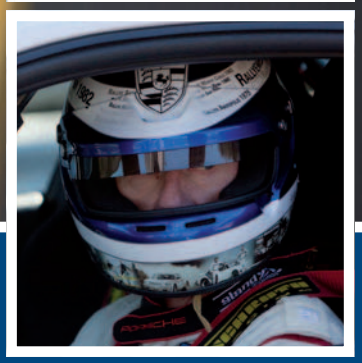

BILSTEIN Range

Shock Absorbers & Suspension Systems

2012/2013

BILSTEIN®

The benchmark in technology and quality.

Foreword

A warm welcome to the world of BILSTEIN: a name which, for over 50 years now, has been synonymous with the highest level of quality in suspension technology. Countless national and international motor sports successes with BILSTEIN products at the wheel and “Best Brand“ media accolades can all testify to this. As part of their serial development, the world’s most renowned automotive brands place their trust in the innovation and quality of BILSTEIN suspension technology. As a result, we have been able to offer tailored shock absorbers and suspension technology for a number of cars over recent decades – whether for timely and efficient repairs, suspension optimisation, or the high demands of motor sports. Here, you can get a detailed insight into our world and range of products - but the only way you can truly experience BILSTEIN is to set off on your first journey and savour the feel of BILSTEIN products at the helm. We hope you enjoy it.

ThyssenKrupp BILSTEIN GmbH
Division Aftermarket

Contents

The BILSTEIN Brand M4
BILSTEIN History M6
Nordschleife Test Programme M8
Motor Sports Success Stories M10
Original Equipment Manufacturer M12
Automotive Fine-Tuning M14
Classic Cars and Off-Roading M16
BILSTEIN Development M18

Technology Highlights M20
BILSTEIN Technologies M22
Lowering / Round Threads M24
Adjustment Range / It's all about the setting M26
BILSTEIN Road Testing M28

BILSTEIN Product Range M30
Universal Spare Parts M33
BILSTEIN B1 – B2 M34
BILSTEIN B3 – B4 M36
BILSTEIN B4 air suspension modules M38
High-Performance Shock Absorbers M39
BILSTEIN B6 – B8 M40
BILSTEIN B6 – B8 Offroad M42

Sport and Threaded Ride Height Adjustable Kits M43
BILSTEIN B12 Pro-Kit – B12 Sportline M44
BILSTEIN B14 – B16 M46

Electronic Suspensions M48
BILSTEIN B16 ridecontrol® &
BILSTEIN B16 DampTronic® M50
BILSTEIN Clubsport M52
Motor sports-/individual suspensions M55
BILSTEIN-Shock-Finder – Product description M62

Catalogue range 1-747
New order number – Old order number 748
New in the range 778
Obsolete range 780
Protection Kits 787
Motorsport 791
Current certificates for download M65
Notes and explanations M66

Catalogue range

Acura 1
Alfa Romeo 1
Alpina 12
Aston Martin 14
Audi 14
Audi-FAW 84
Austin 87
Austin-Healey 87
Autobianchi 87
Auto Union 87
Bentley 87
BMW 87
Brilliance BMW 141
Buick 143
Buick SGM 146
Cadillac 147
Caterham 148
Chevrolet 148
SGM Chevrolet 161
Chrysler 161
Chrysler (BBDC) 162
Citroën 163
Dacia 179
Daewoo 181
Daihatsu 184
Daimler 185
De Lorean 186
Dodge 186
Fiat 187
Ford 213
Changan Ford Mazda 250
Ford USA 251
FSO 253
Gaz 253
Geo 254
Holden 254
Honda 263
Hummer 276
Hyundai 276
Infiniti 280
Innocenti 281
Irmscher 281
Isuzu 281
Jaguar 282
Jeep 285
Kia 287
Lada 288
Lancia 291
Land Rover 293
Jiangling Landwind 295
Lexus 295
Lincoln 296
Lotus 297
Mahindra Renault 297
Maruti Suzuki 297
Mazda 297
Changan Mazda 312
Mercedes Benz 313
Mercury 372
MG 372
Mini 372
Mitsubishi 378
Moskvich 389
Nissan 390
NSU 407
Opel 407
Peugeot 471
Pontiac 496
Porsche 496
Proton 510
Puch 511
Renault 511
Rover 531
Saab 532
Seat 538
Skoda 561
Smart 574
Ssangyong 576
Subaru 576
Suzuki 579
Tofas 583
Toyota 584
Vauxhall 603
Volvo 649
Changan Volvo 664
VW 664
VW-FAW 746
SVW 747
Wartburg 747
Zastava 747

Your **demands** are what drive us.

„For me, arriving at the finish line is everything – and I always want to get there first.“

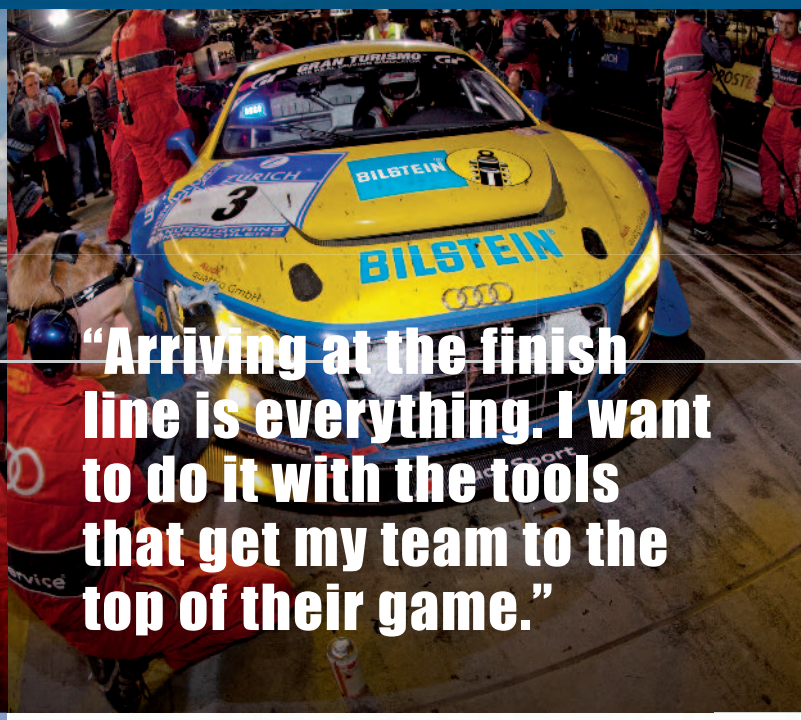

“Arriving at the finish line is everything. I want to do it with the tools that get my team to the top of their game.”

“I want to arrive with all out performance supporting me.”

“For me arriving at my destination in perfect safety is everything.”

"I want to keep going to the end when all the others have given up."

"For us, arriving at our destination is what counts – with a standard of quality that meets the demands of our brand."

„I want to keep going to the end in style. Wherever I go."

"When the road is your destination, you want pure driving enjoyment."

BILSTEIN®

Our innovation is a tradition.

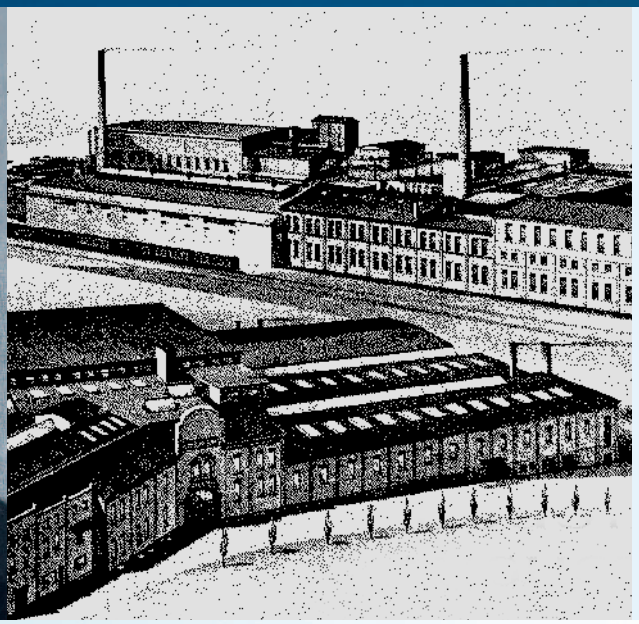

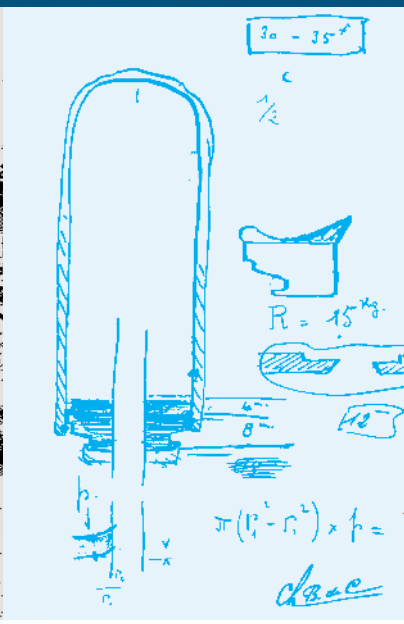

August Bilstein

When the foundations were laid for the BILSTEIN innovation incubator in 1873, nobody could have anticipated the illustrious future that lay in front of the company. Despite starting out in the field of window fittings production, from 1928 onwards the emphasis was increasingly placed on automotive technology. In 1954 came the breakthrough: Hans Bilstein recognised the huge potential of the idea for a mono-tube gas pressure shock absorber developed by French researcher Bourcier de Carbon. We have since gone on to have a huge impact on the course of automotive history. For over 50 years, eminent brands such as Mercedes-Benz have been putting their trust in the strength of innovation and quality demonstrated by our products.

1873
Company founded as a manufacturer of window fittings

1927
First venture into the automotive industry and production of chrome-plated fenders

1929
Development of innovative car jacks

1954
Development of the first mono-tube gas pressure shock absorbers, following the De-Carbon principle

1957
Series production of mono-tube gas pressure shock absorbers for Mercedes-Benz

1961
BILSTEIN shock absorbers' first outing in Porsche Formula 1 racing cars

1983
Development of fully computerised shock absorbers for McLaren Formula 1 racing cars

1990
Development of the first electronically controlled semi-active damping systems

First venture into the automotive industry

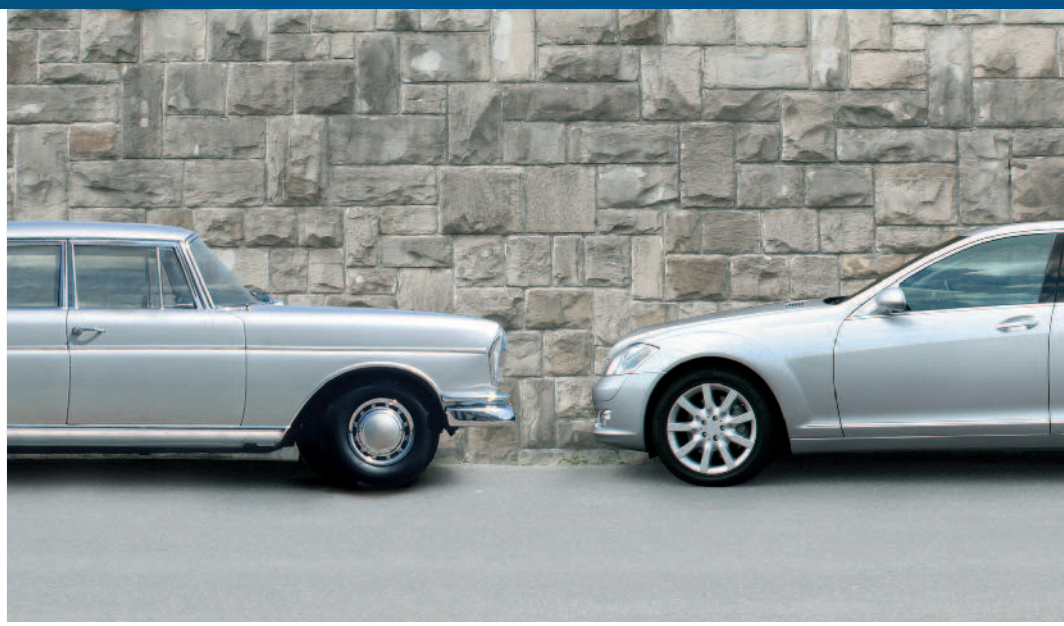

Progress through innovation

1999
Series production of the first active electronic air spring systems for the Mercedes-Benz S-Class (W220)

2004
Innovative DampMatic® for Mercedes-Benz and DampTronic® for Porsche launched onto the market

2005
Series production of innovative air spring systems for the Mercedes-Benz S-Class (W221)

2006
The BILSTEIN B16 PSS 10 adjustment system sets new benchmarks

2007
Introduction of the innovative electronic BILSTEIN B16 ridecontrol® adjustment system

2009
Series production of the innovative lift system for the front axle of Porsche 911 GT3 models

2012
Introduction of the high-end coilover package BILSTEIN Clubsport for race track and road

20,832 kilometers on the grünen Hölle: lik to a Hamburg – Munich trip every day for a

e subjecting a suspension year, only faster!

Some combinations are simply unbeatable. Take, for example, the “Genius on Wheels” plus the “grünen Hölle“: Walter Röhrl on the Nordschleife of the Nürburgring. There’s no better combination for putting a car’s suspension through its paces. Why? This kind of devilish testing programme – combining the merciless Eifel mountain range with one of the most skilful rally drivers of all time – soon separates the good suspensions from the perfect ones. What‘s more, this is the minimum requirement prescribed by all of our test engineers – whether it takes place on the Nürburgring itself or the test track in Papenburg. Because we know you won’t settle for anything less than perfection.

BILSTEIN®

All of them have two things in common:
their innate driving ability that makes them

unique, and perfect equipment.

24h
1. 2. 3.
WINNER
2012

There's no future without a past. Take Formula 1 champions like Niki Lauda and Alain Prost, 24-hour winners such as Jacky Ickx and Hans-Joachim Stuck, rally champions like Walter Röhrl and DTM champions like Bernd Schneider. All of them have two things in common: their innate driving ability that makes them unique, and the perfect equipment. And for all of them, the biggest success stories have happened with BILSTEIN suspensions. For over 40 years, we have been right by the side of international motor sports, offering innovative technology such as threaded ride height adjustable kits, gas pressure technology, Upside-Down technology and parallel damping adjustment. Our experience and commitment equips every ambitious racing driver with the right tools for success, at all levels, in all of our roles – whether acting as the equipment manufacturer for the HWA team of the DTM or for the Land Porsche in the VLN – and on every track around the world.

BILSTEIN®

Many competitors but none who can match the BILSTEIN driving experience.

VW//BMW//BUGATTI//JAGUAR//PORSCHE//MERCEDES-BENZ//MAZDA//LOTUS//MITSUBISHI//

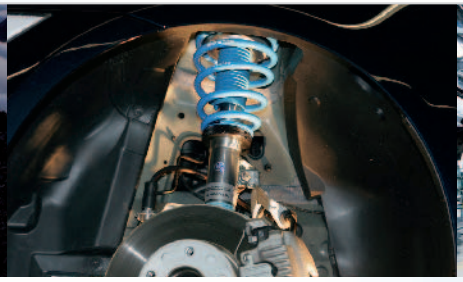

When it comes to driving enjoyment, the world's most renowned automotive manufacturers place their confidence in just one name: BILSTEIN. The legendary driving characteristics demonstrated by such cars as the Porsche 911, Mercedes-Benz S-Class, Bugatti Veyron, Audi R8, Nissan GT-R, and many more, stem from the innovation and experience of our engineers. As a serial development partner, we provide not only shock absorbers, springs and stabilisers, but also unrivalled knowledge garnered from our success in motor sports. Armed with this know-how, we can offer high-quality series production and spare parts for virtually every vehicle model – so you can enjoy that unique BILSTEIN driving experience in your own car too.

BILSTEIN®

There's nothing we can't enhance. That goes for **individuality** too.

We share a motto in common with the world's best-known motor vehicle tuners: Making good even better. That's why we support all the big names – from AC Schnitzer and BRABUS, right through to TechArt – in their endeavours to offer you the ultimate in individual vehicle settings and excellent driving dynamics. It's not just our level of competence in terms of high-tech quality and sportiness that ensures this, but also our meticulous and comprehensive testing programme on the toughest of courses, such as the Nürburgring. Because we know that we'll gladly go through hell to give you a heavenly driving experience!

ABT//PROJEKTZWO//BRABUS//RUF
TECHART//AC SCHNITZER//HARTGE
CARGRAPHIC//CARLSSON//

BILSTEIN®

We don’t see old bangers – only **classics.**

BMW 2002 tii, Ford Escort RS 2000, Opel Kadett GTE, VW Golf GTI. Legends in automotive history – and in motor sports. Never before has there been such enthusiasm for cars from decades gone by. With this in mind, we’re constantly expanding our range to accommodate these classics. In addition to high-quality universal spare parts featuring the latest technology, we also offer high-performance shock absorbers for sport driving and true motor sports/tailored suspensions for the pride and joy in your garage. Because every car is only as young as it drives.

Please request our classic catalogue as well!

Even when things are rough, we'll quickly get you on the right **track.**

Where driving is concerned, there is always one thing that matters: staying on track. Even when you're off the beaten one. It's also our off-road components that benefit from our unrivalled knowledge gained from over 40 years of success in motor sports, coupled with our competence as an industry partner to the world's most renowned automotive brands. As such, for many years now BILSTEIN has gained success in equipping numerous teams in the Baja 500 and 1000 races with BILSTEIN products. Particularly on rough terrain, shock absorbers must be able to withstand extreme loads while at the same time offering maximum traction. So there's no need to place your trust in tarmac capability alone – you can rely on our extremely finely-tuned technology, tested on the world's toughest runs, too.

BILSTEIN®

High performance:
a question of the right approach

For that special driving experience, you need a combination of expertise and an exceptional car. In our development department, we have brought these qualities together in unparalleled fashion. Here, our engineers construct tailored suspension solutions for top-class cars such as the Lotus Elise, Wiesmann, Bugatti Veyron, Mitsubishi Evo X and many more. With their help, you can live out your driving dreams and achieve a limitless level of driving enjoyment.

We have the right absorber for every situation.

As one of the world's leading specialists in the field of shock absorbers, we feel at home on any type of route. Whether it's a race track, off-road terrain, a rally route or an everyday street, our experts can find the right technical solutions for any project and rise to other challenges involving vibration damping too – even when these are on a larger scale, such as constructing Germany's longest car bridge from the mainland to the Baltic Sea island of Rügen, or a heavier one, like creating armoured limousines. The engineers in our "Kunden-sonderwunsch" ("Special Customer Requirements") department will fulfil any wish and ensure that you can have the BILSTEIN driving experience and technology wherever you go. Get in touch with us!

BILSTEIN®

Our technology highlights at a glance.

Technology transferred from motor sports and original equipment manufacturing

OE

Threaded body adjustable range

20 TÜV

Lowering

60/40 30 30-50

Mono-tube technology

1

Twin-tube technology

2

Air suspension

Gas pressure technology

Road-test

Adjustment system

Triple-C-Technology®

Round threads

Don’t settle for standard: go for **BILSTEIN** technology.

smart

BILSTEIN Original Equipment

The world’s foremost automotive brands put their confidence in our quality. Why? Because we develop and series-produce suspension components in collaboration with our partners from the automotive industry. By placing your trust in our experience too, you’ll be opting for the BILSTEIN driving experience when you exchange your suspension components.

- Technology transfer from original equipment manufacturing and motor sports
- Expert knowledge of the world’s most renowned brands, such as Mercedes-Benz, Porsche, BMW, Audi, Bugatti, Ferrari, Lotus, Jaguar and many more
- Comprehensive product range
- High market coverage and availability

BILSTEIN gas pressure technology

Over time, the mono-tube gas pressure technology developed by BILSTEIN has established itself as a standard in automotive construction. This technology involves keeping the oil in the absorber under pressure, which prevents it from foaming when temperatures and loads are increasing. As a result, full damping power is retained even when the system is placed under extreme stress, a feature that can be observed in the self-lowering piston.

- Ensures a high level of traction and more precise handling
- A must-have for powerful sport suspensions
- Added safety in all dynamic driving situations

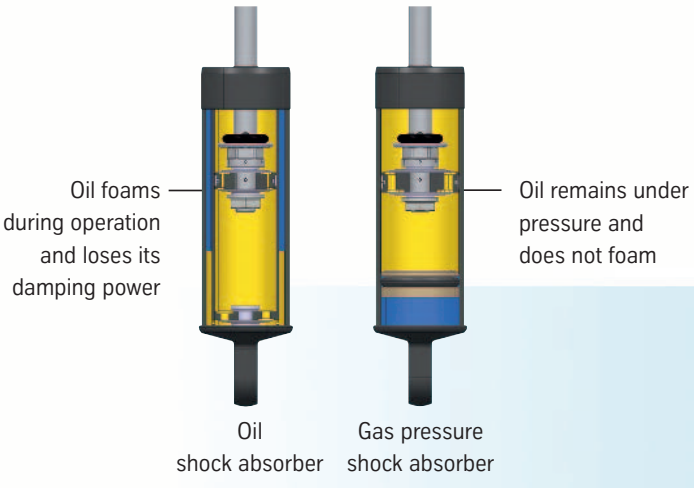

BILSTEIN mono-tube/Upside-Down technology

The original and best: The original mono-tube gas pressure shock absorbers bore the BILSTEIN name, and we're still responsible for producing the best there is. BILSTEIN's mono-tube technology is the number-one choice in motor sports and series-production sports cars: no other type gives engineers the same freedom to choose the perfect installation location or position (e.g. Upside-Down technology).

- Large effective surface on the working piston creates increased damping power and better handling
- Improved dissipation of thermal energy outwards enables a consistently high level of absorber performance
- Sturdy structure for added safety in Upside-Down technology

Twin-tube technology

The proven technology of a twin-tube absorber is applied in the vast majority of all vehicles. BILSTEIN's twin-tube absorbers, featuring "original equipment manufacturer" quality that has undergone rigorous testing, offer a marked improvement in driving characteristics with universal spare parts replaced in a timely and efficient manner.

- Oil or gas pressure technology
- Only tested, OEM quality is provided
- A favourably priced alternative at the highest level
- Technology transfer from series production

BILSTEIN lowering at the highest level.

When it comes to lowering, not only must the vehicle's character be kept in mind, but the driver's too. A multitude of tests involving a wide variety of equipment helps our test engineers determine what the perfect lowering height should be. During this process, we consider aerodynamics, residual spring travel, driving characteristics, comfort, suitability for everyday use, behaviour in limited applications, and aesthetics. This gives rise to our three tenets of lowering.

60/40

Wedge-shaped suspensions involve lowering of approx. 60 mm at the front axle and approx. 40 mm at the rear axle. This creates a sporty appearance which packs a huge visual punch.

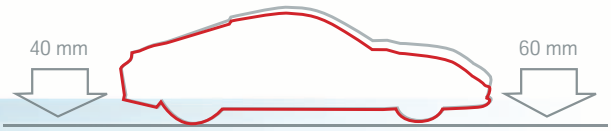

30

With uniform lowering, the entire vehicle is lowered by approx. 30 mm. This accentuates the sporty appearance and emphasises the driving dynamics, without compromising on comfort and or spring travel.

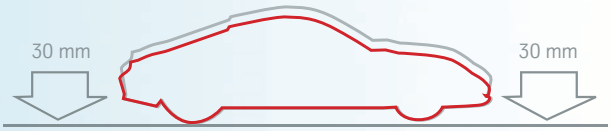

30-50

The threaded ride height adjustable kit enables variable and uniform lowering by approx. 30-50 mm, allowing you to create your own personal balance of sportiness and comfort.

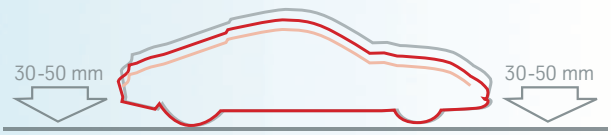

The perfect balance in no time at all.

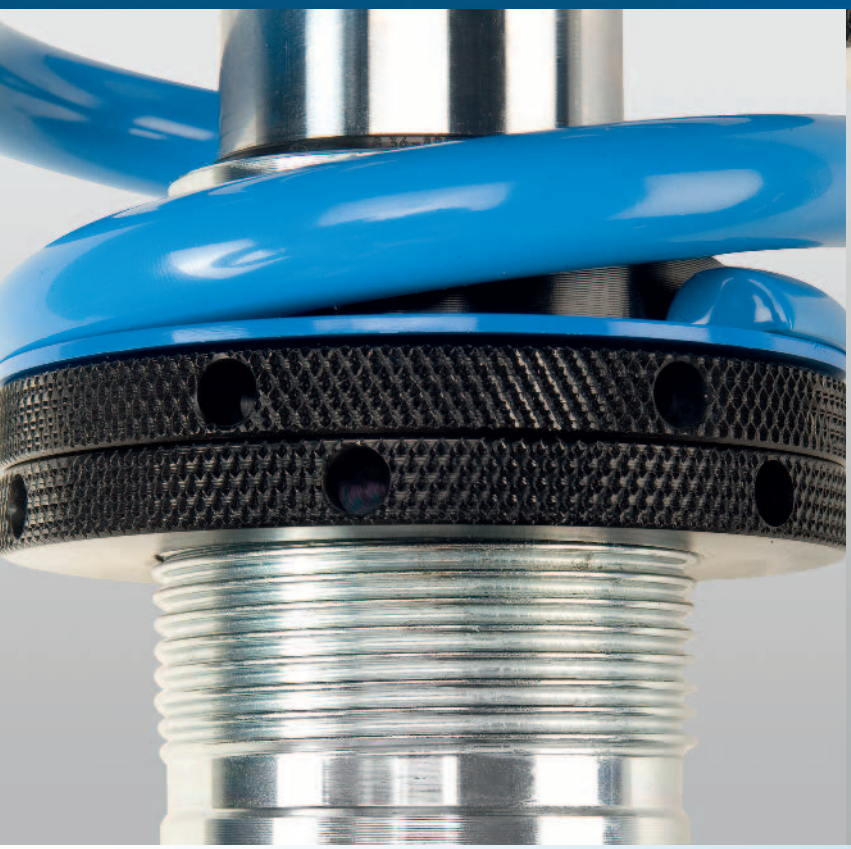

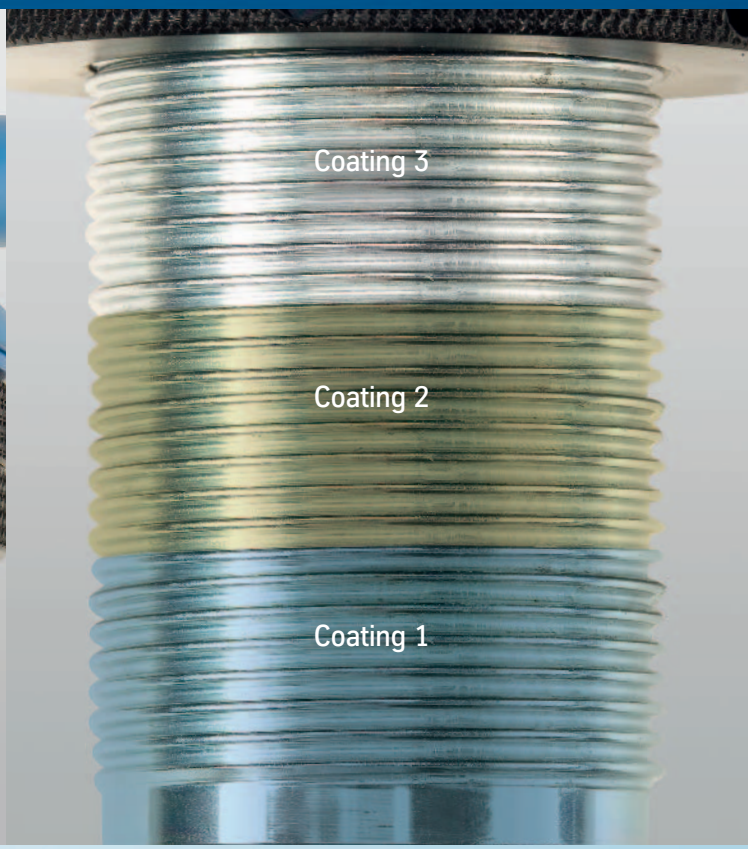

BILSTEIN round threads
To ensure that you can fine-tune your vehicle exactly how you want it, our threaded ride height adjustable kits are easy to adjust – even when they're installed. Allowing you to find the perfect balance for your vehicle.

- The special thread has no sharp edges that could be open to aggressive environmental influences
- The secured aluminium spring plates ensure the utmost level of safety
- The right hook spanners are provided in the kit

BILSTEIN-Triple-C-Technology®
Our 3-layer coating system, developed especially with threaded ride height adjustable kits in mind, guarantees high-quality, enduring corrosion protection.

Coating 1: The special zinc alloy ensures excellent adherence to the base material, and forms the basis for long-lasting corrosion protection.

Coating 2: The middle coating transforms the zinc layer into a closed-formation, homogenous surface.

Coating 3: Not only is the top coat aesthetically pleasing, it also provides additional, long-term protection against mechanical wear and corrosion. Endurance tests to DIN 50021 SS also testify to this: for our material, being subjected to salt spray for over 600 hours is like water off a duck's back – compare that with the 418 hours boasted by stainless steel.

As individual as you are.

+/–20

Threaded body adjustable range
Just as no two vehicles are the same, each driver has their own unique style too. As a result, our threaded ride height adjustable kits even enable you to alter the height of your vehicle when they are installed.

- Spring plates and lock nuts made from a special aluminium alloy ensure maximum stability at a minimum weight
- Specially developed round threads and coating technology for easy adjustment by up to 20 mm; with German TÜV certificate
- Perfect pre-tensioning of sport springs made from highly durable material, at each setting and in every situation, for solid driving characteristics

Air suspension
- Perfect support for the functionality of the car manufacture's active suspension systems

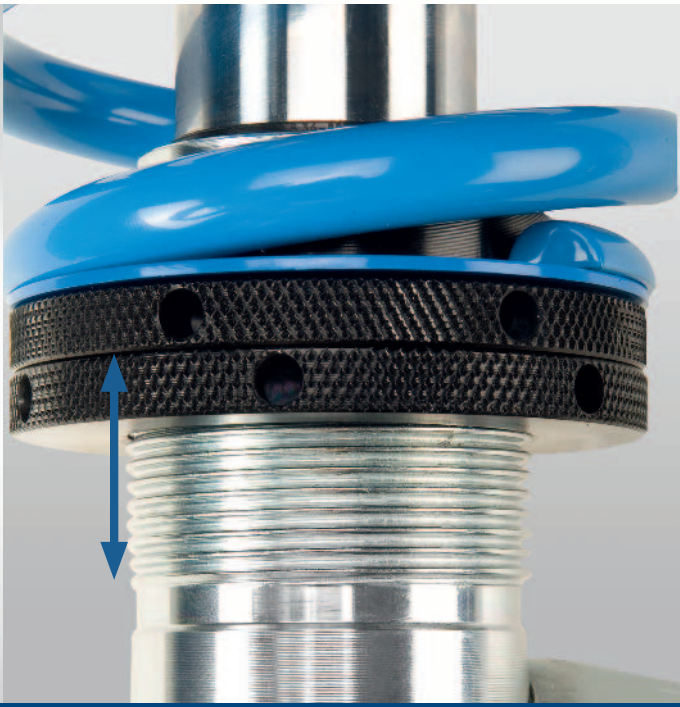

The perfect settings for every setting.

It's all about the setting

Take the children to school in the morning, go to the shops in convenience and comfort in the afternoon – and get the most out of every curve in the road in between. For drivers who don't want to compromise on comfort or sportiness, our engineers have developed the perfect technology.

- Characteristic curve pairs given a multitude of road tests
- Parallel settings in rebound and compression cycles, for balanced driving characteristics
- Driving characteristics settings that suit individual needs perfectly

PSS 9/10

- 9/10 settings for parallel damping adjustment
- Option of changing the settings while kit is installed, by simply turning the adjustment wheel on the absorber

Clubsport

- 100 setting variations that can be experienced and manually selected with tangible differences
- Adjustment wheels with clearly visible and distinct scaling from 1 (soft) to 10 (hard)

ridecontrol®

- An exclusive system that enables settings to be made by means of pushbutton inside the car/or on the dashboard
- Lightning-quick switching from convenient "normal" mode to high-powered "sport" setting

You can never get enough of some good things. Like **experience**, for example.

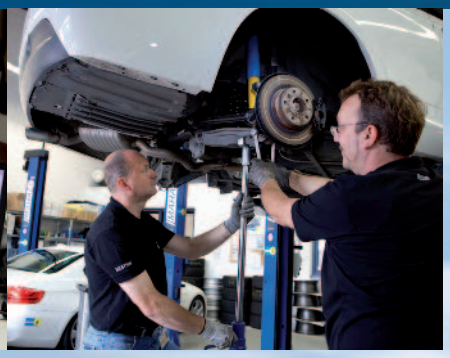

Road-tested by BILSTEIN

To achieve that celebrated BILSTEIN driving experience, our BILSTEIN engineers rely on not only technology that is truly at the cutting edge, but also something that has withstood the test of time: how it feels to the driver. As a result, all of our high-performance absorbers, as well as our sport suspensions and threaded ride height adjustable kits, undergo a rigorous testing programme. On the Nürburgring and in our own test centre at the Papenburg test track, our drivers test how balanced the driving characteristics of various vehicles are in a variety of different driving situations. Only when they have passed this programme of tests with distinction are they allowed to bear the BILSTEIN name. This way, we can guarantee that celebrated BILSTEIN driving experience.

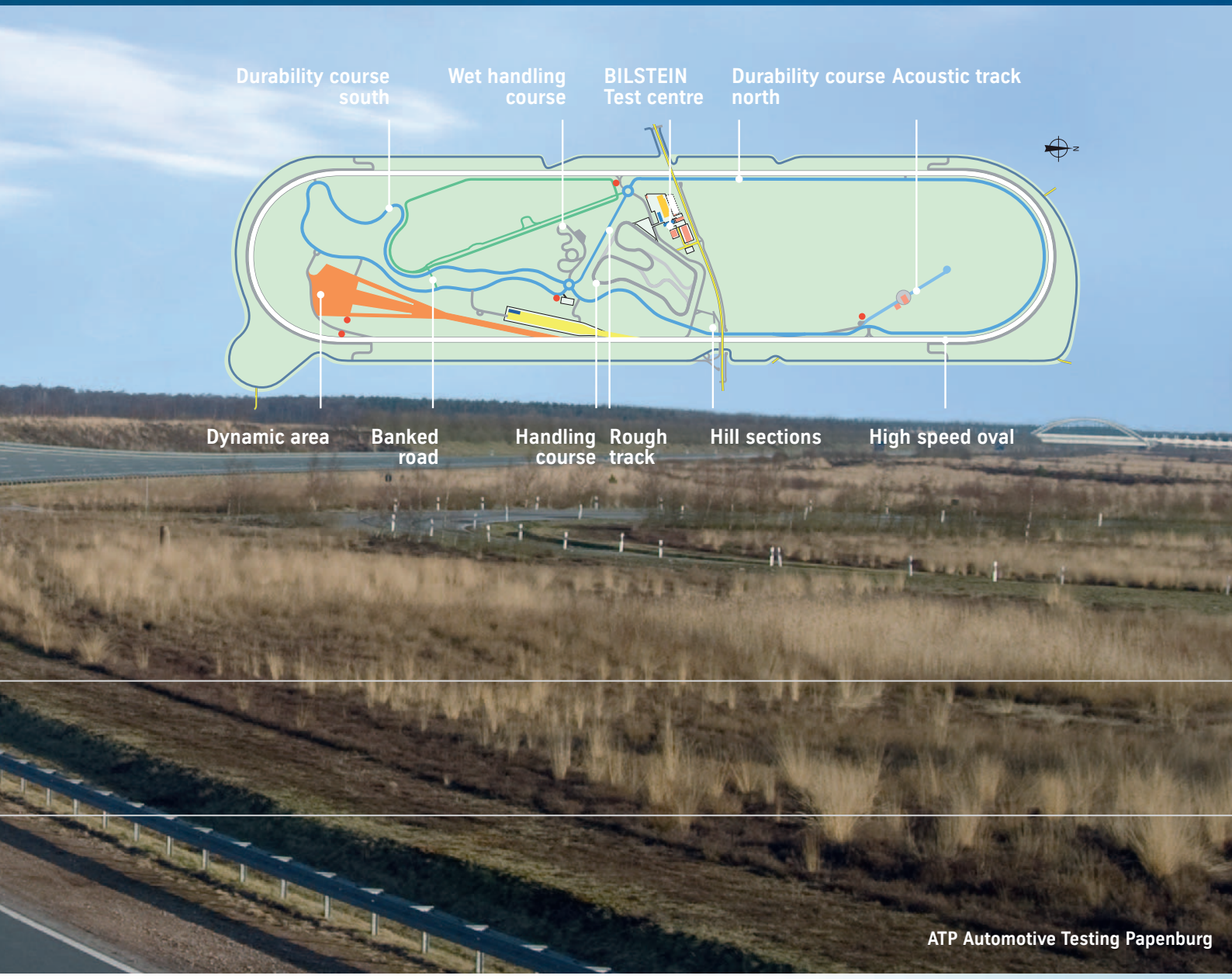

ATP Automotive Testing Papenburg

BILSTEIN-TECHNOLOGY *tested on*
NÜRBURGRING-NORDSCHLEIFE®

The complete **portfolio:** Find the right product range for every requirement.

BILSTEIN B1–B4
universal spare parts

The BILSTEIN technology for practically every type of vehicle. With our “black beauties” – our range of universal spare parts – every driver can find the right suspension components, no matter what their budget. Naturally, these feature high OEM quality and offer the full BILSTEIN experience.

BILSTEIN B6–B8
high-performance shock absorbers

Anyone who has experienced our high-performance shock absorbers knows how much more powerful their vehicle can be. Whether you’re engaged in sporting pursuits or frequently driving with heavy loads, BILSTEIN’s “yellow range“ will take your vehicle further than you ever thought possible.

BILSTEIN B10–B16
sport suspensions

Experience a new dimension in sportiness with BILSTEIN's sport suspensions and threaded ride height adjustable kits. With an individual appearance, a tailored approach and driving characteristics that can be moulded to suit your demands, you can enjoy every street, every curve and every metre of tarmac.

BILSTEIN ridecontrol® & DampTronic®
electronic suspensions

Our electronic suspensions offer individuality at the touch of a button. Top-class technology for all those for whom compromise isn't an option – either in life or when driving. Simply touch a button to switch from a comfort setting to a sport one – and back again – in a matter of seconds.

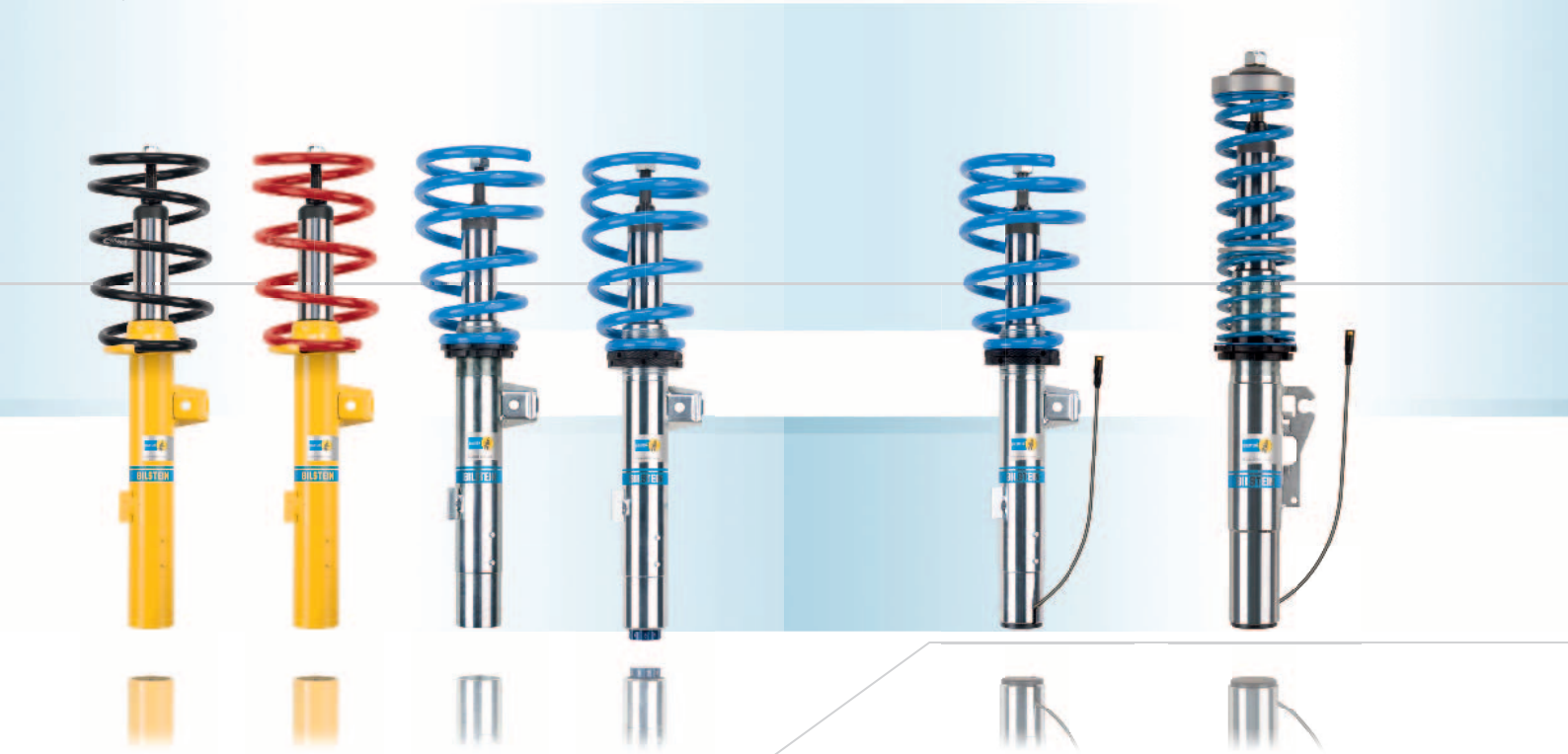

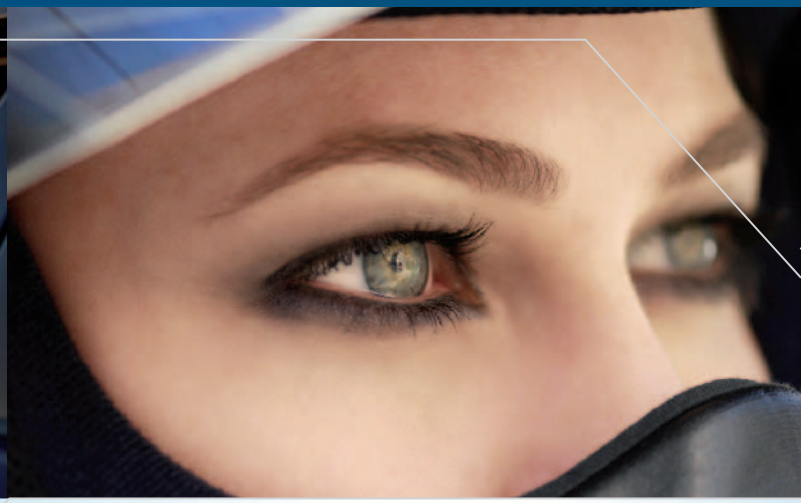

BILSTEIN Clubsport
Racing and road driving united

The BILSTEIN Clubsport suspension kit is a fully street-legal, TÜV-certified high-end coilover package that is also designed for uncompromising use in the fields of racing and clubsport. The suspension combines the tried-and-tested BILSTEIN mono-tube gas pressure technology with the highest levels of engineering from the field of motor sport.

BILSTEIN Motorsport
Motorsport suspensions

Racing cars fitted with our BILSTIEN Motorsport suspensions experience maximum contact between the tire and the road. Many racing teams trust the BILSTEIN MDS with its independently adjustable rebound and compression settings and use these suspensions for a podium finish.

The foundation of that special driving experience: **universal spare parts**

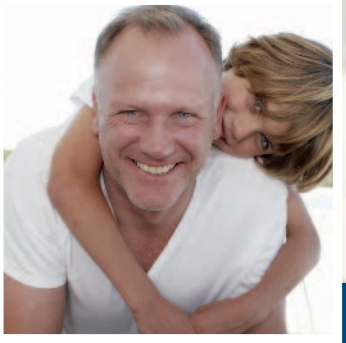

BILSTEIN®

BILSTEIN B1
Perfectly tailored accessories.

Support bearing

Mounting kit

OE

Any shock absorber is only as good as the equipment around it. So when you're replacing shock absorbers, make sure you have the right service parts. Replacing bump stops and dust tubes is an absolute must.

The product benefits at a glance:

- All components designed to suit our BILSTEIN shock absorbers, down to the last detail
- Wide range of support bearings for almost every type of car
- Original BILSTEIN service parts with the high level of OEM quality that is expected from us

BILSTEIN B2
This is how simple quality can be.

OE

Our BILSTEIN B2 oil dampers are cost-effective alternatives for timely and efficient repair work.

The product benefits at a glance:

- Only, tested OEM quality is provided
- A favourably priced alternative at the highest level
- Technology transfer from series production

BILSTEIN®

BILSTEIN B3 If you're looking for quality, look no further.

By choosing BILSTEIN springs, you're backing an uncontested champion: a successful motor sports supplier and a leading original equipment manufacturer of automotive springs.

The product benefits at a glance:

- Innovative technical designs, such as Pigtail ends, Minibloc forms and central force design
- High-quality chrome vanadium or chrome silicone steel for an extremely high level of break resistance
- Seated after forming process to prevent heat losses
- Careful surface compression and coating for a long service life
- Uncompromising OEM quality

BILSTEIN B4
Power under pressure.

The original and best: For over 50 years now, the original mono-tube gas pressure shock absorbers have come from their founding source – BILSTEIN – and used in practically every car model of recent decades.

The product benefits at a glance:

- Constant damping power under any load
- High power reserves for maximum safety
- Drive as though it's the first time, every time
- High OEM quality
- BILSTEIN gas pressure technology

OE GAS

BILSTEIN B4 Air Suspension Module
Like driving on a cloud.

BILSTEIN B4 air suspension modules
Working together with Mercedes-Benz, our engineers have developed a top-of-the-range suspension for top-of-the-range models: the air suspension system. The Mercedes-Benz S-Class (W220/ C215) has this system to thank for its famed driving comfort – not to mention the fact that it is one of the world's first series production vehicles to be equipped with active springs and absorbers.

The product benefits at a glance:

- High OEM quality
- BILSTEIN gas pressure technology
- Lightning-quick reactions to road and vehicle conditions
- Excellent comfort and perfect driving characteristics

When performance is everything:
high-performance shock absorbers

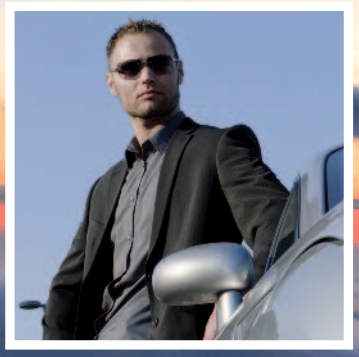

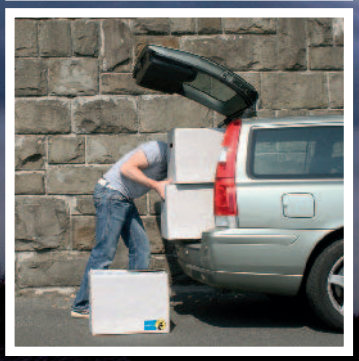

BILSTEIN®

BILSTEIN B6
Performance you can feel.

If you expect more damping power from your shock absorber – even under load – but don't want to opt for an all-out sports model, the BILSTEIN B6 is the ideal solution.

The product benefits at a glance:

- Increased power reserves and service life, even when pulling transporters and trailers or during frequent journeys with loads
- Optimum adhesion and enhanced lane change stability in both day-to-day and extreme situations
- Marked improvement in safety and performance without additional spring changes (lowering)
- BILSTEIN gas pressure technology
- BILSTEIN mono-tube/Upside-Down technology, made in Germany
- Road and track tested by BILSTEIN for fine tuning
- No German TÜV registration required

BILSTEIN-TECHNOLOGY *tested on*
NÜRBURGRING-NORDSCHLEIFE®

BILSTEIN B8
Performance you can feel and see.

What lowering or sport springs are to aesthetics, BILSTEIN B8 is to performance!

The product benefits at a glance:

- Shortened high-performance shock absorbers for virtually every lowering spring set and series production sport vehicles
- Sports settings with high level of comfort
- Precision handling and optimised vehicle control
- BILSTEIN gas pressure technology
- BILSTEIN mono-tube/Upside-Down technology, made in Germany
- Road and track tested by BILSTEIN for fine tuning

BILSTEIN-TECHNOLOGY *tested on*
NÜRBURGRING-NORDSCHLEIFE

BILSTEIN B6/BILSTEIN B8 Offroad
For off-road performance too.

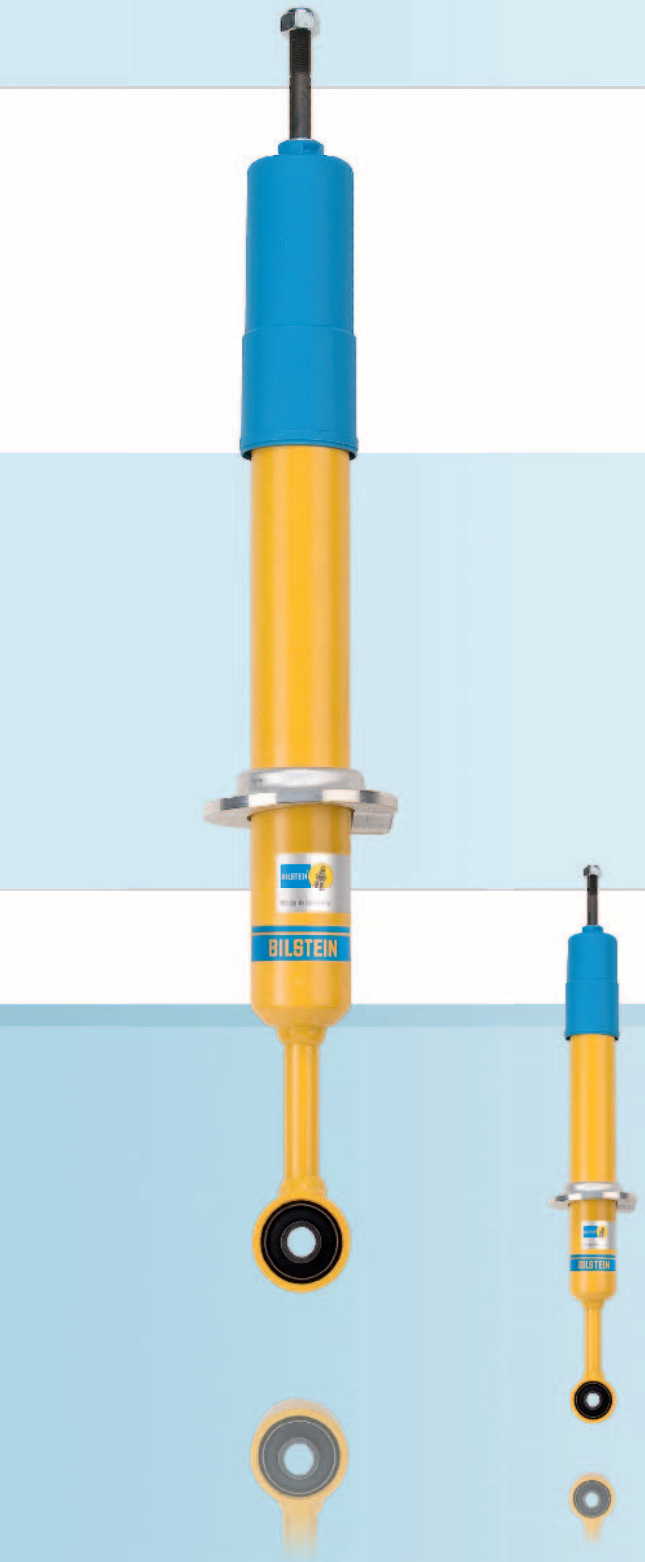

For off-road vehicles, we offer a version of the BILSTEIN B6 that is adapted to special requirements. The precise settings reduce uncontrolled movements by the high structure and increase steering precision and the suspension's load carrying capacity, as well as guaranteeing more vehicle control and, therefore, safer handling and better traction.

The product benefits at a glance:

- Greater performance reserves and service life, even when towing or in off-road applications
- Optimum adhesion and enhanced lane change stability in both day-to-day and extreme situations
- Marked improvement in safety and performance without additional spring changes (standard springs can be used)
- BILSTEIN gas pressure technology
- BILSTEIN mono-tube/Upside-Down technology, made in Germany
- Road and track tested by BILSTEIN for fine tuning
- No German TÜV registration required

BILSTEIN B8 Offroad
Performance at a higher level.

The ideal shock absorber for increased ground clearance and optimum adhesion. The freedom to find enjoyment off the beaten track.

A new dimensions in sportiness: sport suspensions and threaded ride height adjustable kits

BILSTEIN B12 Pro-Kit
The choice of professionals.

If you're looking for the perfect combination of a superior appearance, sporty dynamics and high performance, you're on exactly the right track with this sport suspension.

The product benefits at a glance:

- Professional Cornering System PCS
- Precise response, excellent driving performance and high reserves of safety
- Lowering up to 40 mm
- EIBACH Pro-Kit performance springs with progressive characteristic
- Springs and shock absorbers road-tested and fine-tuned to complement one other perfectly
- BILSTEIN gas pressure technology
- BILSTEIN mono-tube/Upside-Down technology
- German TÜV certificate
- Made in Germany

BILSTEIN B12 Sportline
Sporty look and technology for great performance.

You will impress others with the sporty lowering – and yourself with the fantastic handling: precise responses, dynamics and comfort rolled into one.

The product benefits at a glance:

- Professional Cornering System Sport PCSS
- Direct response, good driving perfomance and sporty look
- Lowering up to 50 mm
- EIBACH Sportline Performance sports springs with progressive characteristic
- Springs and shock absorbers road-tested and fine-tuned to complement one other perfectly
- BILSTEIN gas pressure technology
- BILSTEIN mono-tube/Upside-Down technology
- German TÜV certificate
- Made in Germany

BILSTEIN B14
Sport makes you flexible.

With the BILSTEIN B14 threaded ride height adjustable kit, we're bringing technology from the race track onto the street.

The product benefits at a glance:

- Threaded body adjustable range of 20 mm at both axles, while installed
- Lowering of approx. 30-50 mm at front and rear
- Road-tested by BILSTEIN under motor sports conditions and fine-tuned
- Spring plates and lock nuts made from a special aluminium alloy
- Surface coating using Triple-C-Technology® for long-lasting corrosion resistance
- Round threads for ease of adjustment
- Quality sport springs made from highly durable material
- BILSTEIN gas pressure technology
- BILSTEIN mono-tube/Upside-Down technology, made in Germany
- German TÜV certificate

BILSTEIN-TECHNOLOGY *tested on*
NÜRBURGRING-NORDSCHLEIFE®

BILSTEIN B16
Driving enjoyment – it's all about the setting

The new power class created by BILSTEIN engineers aims to achieve the ultimate in driving enjoyment based on individual requirements.

The product benefits at a glance:

- 9/10 characteristic curve pairs can be selected by adjustment wheel while installed
- Threaded body adjustable range of 20 mm at both axles while installed
- Individual settings ranging from extreme sportiness right up to the highest level of driving comfort
- Lowering of approx. 30-50 mm at front and rear
- Road-tested by BILSTEIN under motor sports conditions and fine-tuned
- Spring plates and lock nuts made from a special aluminium alloy
- Surface coating using Triple-C-Technology® for long-lasting corrosion resistance
- Round threads for ease of adjustment
- Quality sport springs made from highly durable material
- BILSTEIN gas pressure technology
- BILSTEIN mono-tube/Upside-Down technology, made in Germany
- German TÜV certificate

BILSTEIN-TECHNOLOGY *tested on*
NÜRBURGRING-NORDSCHLEIFE®

The benchmark in sportiness and comfort: **electronic suspensions.**

BILSTEIN®

BILSTEIN B16 ridecontrol®
Sportiness at the touch of a button.

BILSTEIN-TECHNOLOGY *tested on*
NÜRBURGRING-NORDSCHLEIFE®

In the blink of an eye, you can switch the suspension setting from "comfort" to "sport" mid-journey by simply touching a button in the cockpit.

The product benefits at a glance:

- "Comfort" mode creates smooth compensation for uneven surfaces
- "Sport" mode for excellent driving dynamics and maximum power reserves in all situations
- Illuminated operator button for controlling settings
- Threaded body adjustable range of 20 mm at both axles, while installed
- Lowering of approx. 30-50 mm at front and rear
- Road-tested by BILSTEIN under motor sports conditions and fine-tuned
- Spring plates and lock nuts made from a special aluminium alloy
- Surface coating using Triple-C-Technology® for long-lasting corrosion resistance
- Round threads for ease of adjustment
- Quality sport springs made from highly durable material
- BILSTEIN gas pressure technology
- BILSTEIN mono-tube/Upside-Down technology, made in Germany
- German TÜV certificate

BILSTEIN B16 DampTronic®
Dynamics without compromise.

An exclusive power class for exclusive cars: Porsche or Nissan GT-R owners, who have already chosen to experience the pleasure of a groundbreaking active suspension (in the case of the Nissan GT-R, a series), can now get better acquainted with this individual solution.

The product benefits at a glance:

- Perfectly adapted to suit series-production electronic adjustment system
- Superior driving dynamics with three setting levels
- Ability to switch rapidly from comfortable, everyday mode to sporty setting for journeys across rural roads and right up to a racing setting for championship sport
- Threaded body adjustable range of 20 mm at both axles, while installed
- Lowering of approx. 30-50 mm at front and rear
- Road-tested by BILSTEIN under motor sports conditions and fine-tuned
- Spring plates and lock nuts made from a special aluminium alloy
- Surface coating using Triple-C-Technology® for long-lasting corrosion resistance
- Round threads for ease of adjustment
- Quality sport springs made from highly durable material
- BILSTEIN gas pressure technology
- BILSTEIN mono-tube/Upside-Down technology, made in Germany
- German TÜV certificate

BILSTEIN-TECHNOLOGY *tested on*
NÜRBURGRING-NORDSCHLEIFE®

3/06
CLUBSPORT
approved by Walter Röhrl
BILSTEIN

Racing and road driving united
Clubsport suspension kits

BILSTEIN®

BILSTEIN Clubsport
Racing and road driving united.

The BILSTEIN Clubsport suspension kit is a fully street-legal, TÜV-certified high-end coilover package that is also designed for uncompromising use in the fields of racing and clubsport. The suspension combines the tried-and-tested BILSTEIN mono-tube gas pressure technology with the highest levels of engineering from the field of motor sport.

The product benefits at a glance:

- 100 setting variations that can be experienced and manually selected with tangible differences
- Adjustment wheels with clearly visible and distinct scaling from 1 (soft) to 10 (hard)
- Clear click resolution and colour-coding: red for rebound force, blue for bump force
- Simple setup changes in installed state without additional tools
- Camber adjustment with uniball supporting bearing
- Weight and Installation Space advantages thanks to integrated reservoir
- Quality racing springs made from highly durable material
- Spring plates and lock nuts made from special aluminium alloy
- Aluminium uniball supporting bearing
- Aluminium adjustment wheels
- Highest force closure by BILSTEIN mono-tube gas pressure technology from the field of motorsport „Made in Germany“
- 2-way adjustment system, independent adjustment of rebound and bump force
- Surface coating using Triple-C-Technology® for long-lasting corrosion resistance
- Foundation for further customisations for use in the field of racing
- Street-legal: German TÜV certificate

BILSTEIN-TECHNOLOGY *tested on*
NÜRBURGRING-NORDSCHLEIFE®

No more Limits.
Motor sports/individual suspensions.

Working principle: shock absorbers for individual suspension.

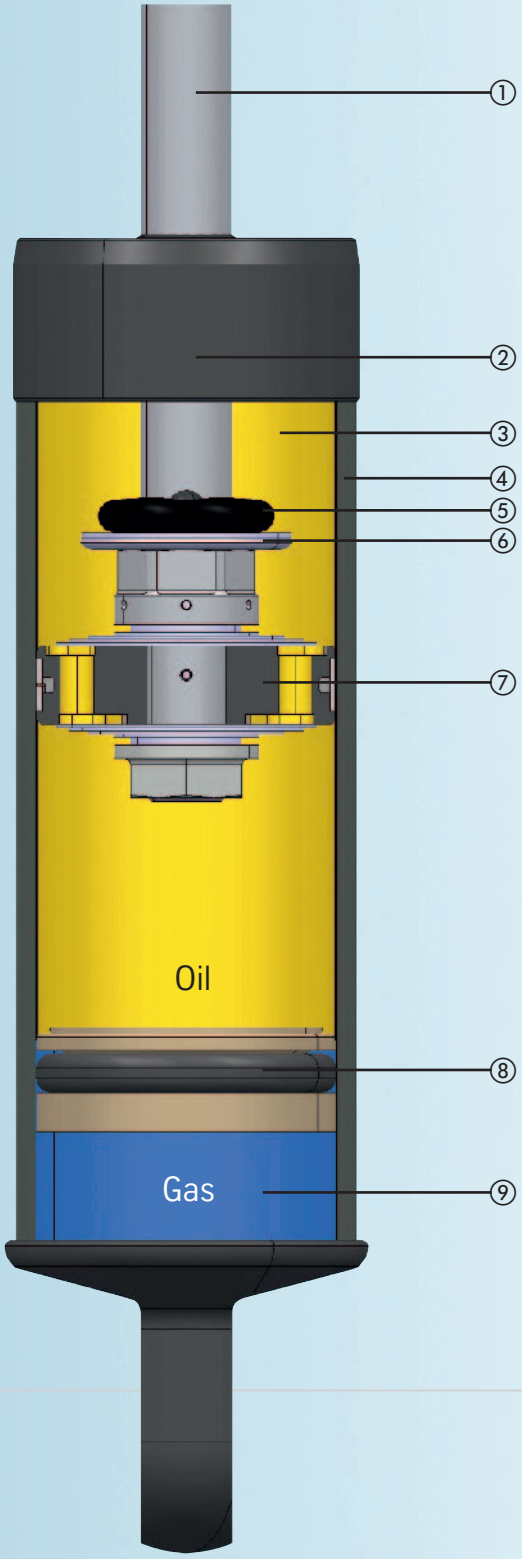

① Piston rod: Hard chrome-plated with oscillating finish grinding – higher stability against lateral forces, minimised friction

② Teflon-coated piston rod guide with super-elastic high-pressure seals – zero-play guidance throughout entire service life

③ Work chamber filled with oil – minimum possible oil quantity – good response rates

④ Shock absorber pipe - generous surface dimensions – good heat dissipation

⑤ Rebound stop

⑥ Brake

⑦ Generous and effective piston area – low working pressures at high forces – low damping force hysteresis

⑧ Dividing piston: Can be relied upon to separate oil and gas throughout entire service life

⑨ Gas chamber – volume compensation, temperature compensation and support of compression forces – no damping force lost through cavitation erosion

Design options

The BILSTEIN mono-tube shock absorber is a closed system and functions in every installation position. This offers special advantages in restricted space. The weight of the unsprung masses in vehicles can also be reduced by fitting the piston rod to the axle support.

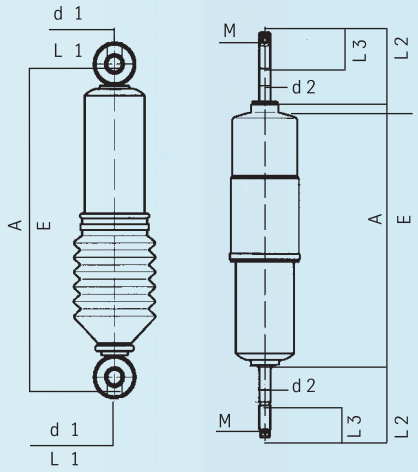

Examples for types of fitting and installation positions

Eye – Eye

For eye fitting, different types of rubber/metal connection are available.

Pin – Pin

For pin fitting, different diameters and types of thread are available.

Alternative

Other types of fitting version can be designed; e.g. eye-pin or pin-eye.

Please use the experience of BILSTEIN specialists to define the design.

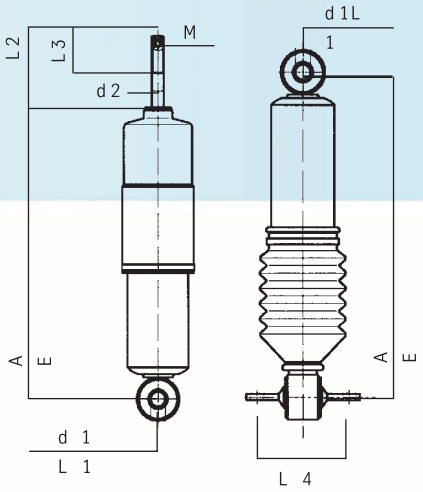

d1 Bush ID
d2 Diameter of pin
A Extended length
E compressed length
L1 Length of bush
L2 Length of pin
L3 Length of thread
L4 Hole clearance
M Thread

Overview of standard measurements

Type	Standard tubes		Standard piston rods	Overall length	Maximum damping forces	
	Ø outer	Ø inner	Rod diameter	Maximum extended	V=0.524 m/s	
	mm				Rebound (N)	Compression (N)
B 22	Ø 25	Ø 22	8	400	1.500	1.000
B 30	Ø 33,5	Ø 30	11	450	2.300	1.500
B 36	Ø 39,4	Ø 36	11	500	2.500	2.000
B 46	Ø 50	Ø 46	11,14	600	5.000	3.500
B 60	Ø 65	Ø 60	14	800	15.000	6.000

Height-adjustable spring-supported high-performance shock absorber.

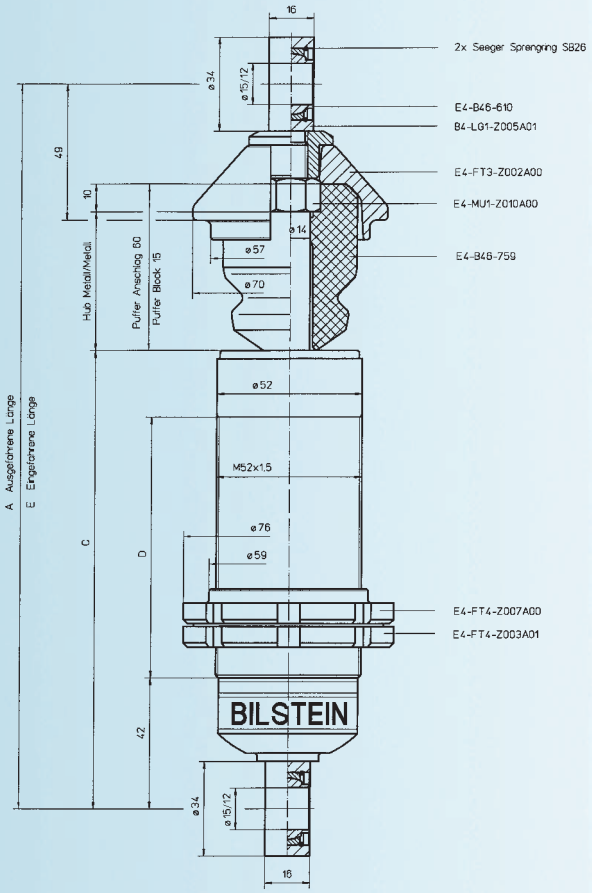

- Steel or hard-coated aluminium damper tubes available for delivery
- Aluminium models have 30% higher heat conductivity with extremely low weight and outstanding service life
- Individual setting adapted for the application in consultation with the customer
- Installation and function in all mounting positions
- Height adjustment in built-in condition
- High performance reserves and extreme sturdiness

(Special models built on request)

Threaded shock absorber (please specify steel or aluminium model when placing your order) with Ø 15 mm hinge bearing

Ø 15 mm hinge bearing	Order no.	A	E	Stroke	C	D
	BS5-6396	245	191	54	145	65
	BS5-6397	288	214	74	168	88
	BS5-6398	309	225	84	180	100
	BS5-6399	331	237	94	191	111
	BS5-6400	374	260	114	214	134
	BS5-6401	417	283	134	237	157
	BS5-6402	460	306	154	260	180
	BS5-6403	503	329	174	283	203
	BS5-6404	546	352	194	306	226
	BS5-6405	589	375	214	329	249
	BS5-6406	632	398	234	352	272
	BS5-6407	675	421	254	375	295

Dimensions in mm

Motor sports
Modular Damper System MDS.

2-way MDS adjuster optimised for ease of use

- Adjustment wheels – numbered from 1 (soft) to 10 (hard)
- 10 positions clearly marked to ensure accuracy when clicking in
- Red rebound
- Blue bump
- Easy-to-read click setting
- Can be adjusted easily by hand
- No tool required for adjustment
- Directions of rotation cannot be mixed up

2-way MDS shock absorber optimised for ideal performance

- Mono-tube shock absorber for maximum piston diameter
- High damping power – optimum heat dissipation
- Light in weight – no external tank
- Low damping force hysteresis – minimum oil content
- Low susceptibility to failure – no external components

2-way MDS shock absorber optimised for ease of use

- Springs can be replaced quickly simply by removing the spring retainer
- Bump stop can be replaced quickly simply be removing and replacing the adjuster head

Motor sports MDS

- Individual damping characteristic
- Configurable adjustment range
- 10 well defined clicks
- Low hysteresis
- Low friction
- Perfect reproducibility
- Easy to handle
- Configurable standard dimensions
- Customer dimensions on request

MDS, 1-Way

- One adjuster
- Combined Compression-/ Rebound adjustment

MDS, 2-Way

- Two adjuster
- Independent Compression-/ Rebound adjustment

BILSTEIN®

Functional principle
Modular Damper System MDS.

MDS 1500 2-Way / 1-Way, MDS 860 2-Way / 1-Way

Stroke [mm]	50	55	60	65	70	75	80	85	90	95	100	105	110	115	120
Damperlength [mm] $L_{extended}/L_{compressed}$	290/240	300/245	310/250	320/255	340/270	350/275	360/280	370/285	380/290	390/295	400/300	410/305	420/310	430/315	440/320
	300/250	310/255	320/260	330/265	350/280	360/285	370/290	380/295	390/300	400/305	410/310	420/315	430/320		
	310/260	320/265	330/270	340/275	360/290	370/295	380/300	390/305	400/310	410/315	420/320				
	320/270	330/275	340/280	350/285	370/300	380/305	390/310	400/315	410/320						
	330/280	340/285	350/290	360/295	380/310	390/315	400/320								
	340/290	350/295	360/300	370/305	390/320										
	350/300	360/305	370/310	380/315											
	360/310	370/315	380/320												
	370/320														

Customer dimensions on request

MDS 1500
2-Way / 1-Way

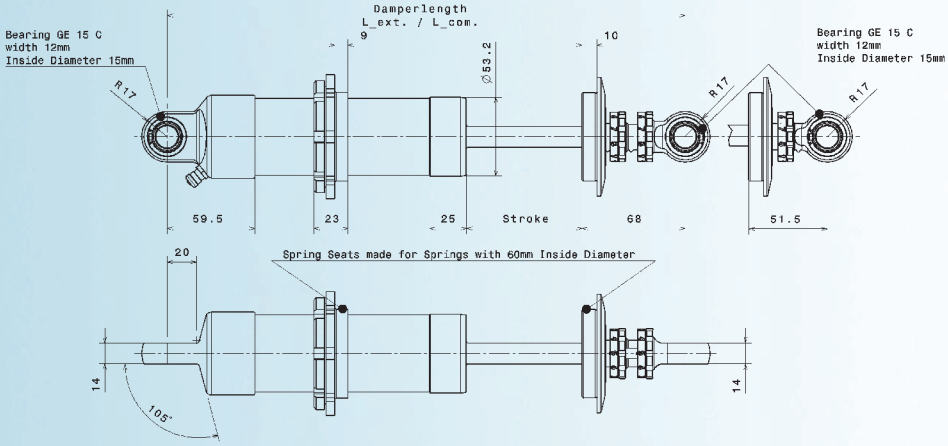

All dimensions in mm

MDS 860
2-Way / 1-Way

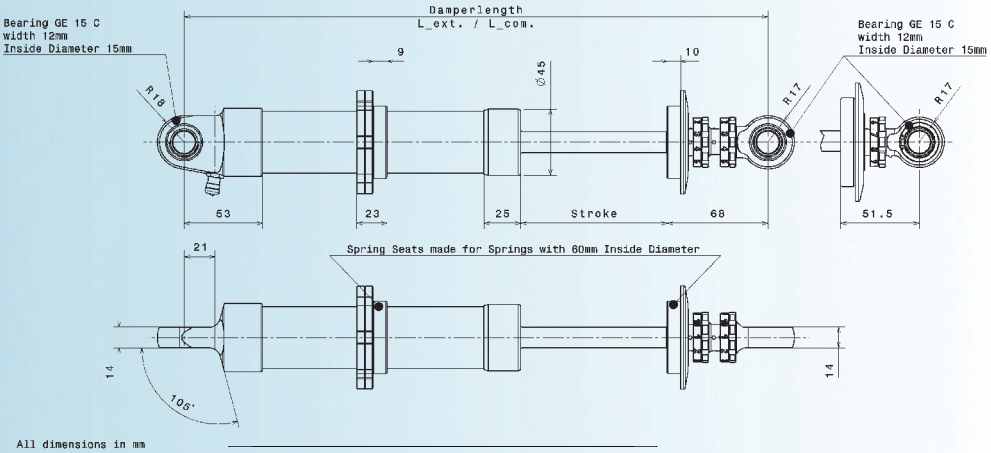

All dimensions in mm

Order number example: MDS- 080 360 A

- Version
  A= MDS 1500 2-Way, B= MDS 860 2-Way
  C= MDS 1500 1-Way, D= MDS 860 1-Way
- Extended length
  Example: 360 mm
- Damper stroke
  Example: 80 mm
- Type

Vehicle-specific applications MDS 2-Way (1-Way) (Excerpt)

Aston Martin DBR9 GT1 Rundkurs
VA: MDS-0028860 / HA: MDS-0028861

Aston Martin DBRS9 GT3 VLN*
VA: MDS-0037419 / HA: MDS-0037420

Audi R8 LMS VLN
VA: MDS-0041410 / HA: MDS-0041367

Audi RS4 VLN*
VA: MDS-0028412 / HA: MDS-0028413

BMW Alpina B6 GT3 VLN
VA: MDS-0035930 / HA: MDS-0035940

BMW E46 VLN*
VA: MDS-0041687 / HA: MDS-0043271

BMW Z4 VLN*
VA: MDS-0041687 / HA: MDS-0041692

BMW E9X M3 VLN*
VA: MDS-0035602 / HA: MDS-0035304

Corvette C6 GT2 VLN
VA: MDS-080350AAA00 / HA: MDS-0043220

Corvette C6 GT2 VLN (1-Way)
VA: MDS-0041480 / HA: MDS-0041481

Corvette C6R GT1 Rundstrecke
VA: MDS-0036439 / HA: MDS-0036440

Ferrari F430 VLN
VA: MDS-0034917 / HA: MDS-0034918

Ford GT VLN
VA: MDS-0034907 / HA: MDS-0034908

Formula 3
VA: MDS-0028122 / HA: MDS-0028122

Lamborghini Gallardo GT3 VLN
VA: MDS-080400AAA00 / HA: MDS-110425AAA00

Nissan 370Z VLN*
VA: MDS-099498AAA00 / HA: MDS-0042631

Porsche 997 GT4 VLN
VA: MDS-0035751 / HA: MDS-0042584

Porsche 997 Cup VLN*
VA: MDS-0035751 / HA: MDS-0035650

Porsche 997 Cup Grand AM
VA: MDS-0040896 / HA: MDS-0040900

Porsche 997 Cup Rundkurs
VA: MDS-0040896 / HA: MDS-0040900

Porsche 997 Cup Rallye*
VA: MDS-0035751 / HA: MDS-0042250

Porsche 997 Cup S VLN*
VA: MDS-0035751 / HA: MDS-0035650

Porsche 997 RSR VLN*
VA: MDS-0035751 / HA: MDS-0035650

Porsche 997 RSR Rundkurs
VA: MDS-0040896 / HA: MDS-0042364

Seat CUP VLN
VA: MDS-0042556 / HA: MDS-112473AAA00

* Additional adjustments to the vehicle required.

Contact
+49 (0)2333 791-4720
+49 (0)2333 791-4675
motorsport@bilstein.de
www.motorsport.bilstein.de

BILSTEIN-Shock-Finder:
All products at a glance.

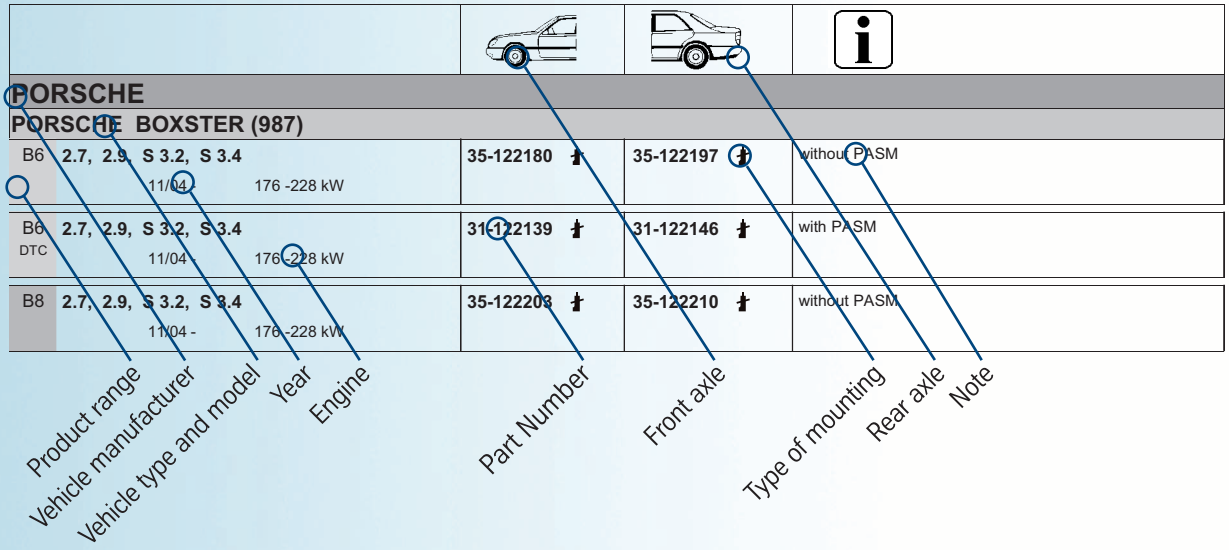

Type of fastening

e.g. pin top / eye bottom

Top mounting

Lower mounting

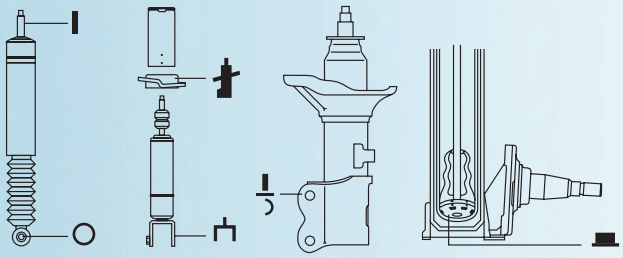

Eye

Base piece

McPherson strut

Yoke

Clip

Pin

Special version

Front left

Front right

Rear left

Rear right

Up

Down

PK Accessory

Steering damper

VA Front axle

HA Rear axle

i. V. In preparation

ACURA

ACURA CL Coupe

B6 Sport	**2.2** 10/96 - 09/97 108 kW	**24-023719**	**24-021142**	

ACURA INTEGRA Saloon

B6 Sport	**1.8 LS** 10/93 - 09/01 125 kW	**24-016032** **24-016049**	**24-016056**	
B8	**1.8 GS-R** 10/93 - 09/01 147 kW	**24-023405**	**24-023412**	

ACURA INTEGRA Coupe

B6 Sport	**1.8 Sport** 10/93 - 09/01 125 kW	**24-016032** **24-016049**	**24-016056**	
B8	**1.8 GS-R** 10/93 - 09/01 147 kW	**24-023405**	**24-023412**	

ACURA LEGEND

B6 Sport	**2.0, 2.0 Turbo, 2.7** 01/87 - 08/91 107 -140 kW	*24-011990* *24-012003*		mark: Heavy Duty
B6 Sport	**2.5** 01/86 - 12/87 122 kW	*24-011990* *24-012003*		

ACURA LEGEND Coupe

B6 Sport	**2.7** 01/87 - 08/91 130 kW	*24-011990* *24-012003*		mark: Heavy Duty

ACURA NSX

B6 Sport	**3.0, 3.2, R 3.0** 01/90 - 02/02 188 -206 kW	**24-016636**	**24-016650**	mark: Heavy Duty

ACURA NSX Targa (NA1)

B6 Sport	**3.0, T 3.0** 01/95 - 02/02 188 -201 kW	**24-016636**	**24-016650**	mark: Heavy Duty

ALFA ROMEO

ALFA ROMEO 6 (119)

B4	**2.5 TD** 07/81 - 05/86 77 kW	*19-019567*		

ALFA ROMEO 33 (905)

B3	**1.2, 1.3, 1.3 i.e., 1.5, 1.5 QV, 1.7, 1.7 i.e., 1.7 QV, 1.8 TD** 05/83 - 06/90 50 -95 kW	**36-202720**		with standard chassis

ALFA ROMEO 75 (162B)

B4	**1.6, 1.6 CAT, 1.8, 1.8 Turbo, 1.8 Turbo i.e., 2.0, 2.0 T.S CAT, 2.0 T.S., 2.0 TD, 2.4 TD, 2.5 V6, 2.5 V6 CAT, 3.0 V6, 3.0 V6 CAT** 05/85 - 02/92 70 -141 kW	*19-019789*	*19-019796*	

ALFA ROMEO				
ALFA ROMEO 75 (162B)				
B6 Sport	**1.6, 1.6 CAT, 1.8, 1.8 Turbo, 1.8 Turbo i.e., 2.0, 2.0 T.S CAT, 2.0 T.S., 2.0 TD, 2.4 TD, 2.5 V6, 2.5 V6 CAT, 3.0 V6, 3.0 V6 CAT** 05/85 - 02/92 70 -141 kW	**24-011754**	**24-011761**	
ALFA ROMEO 90 (162)				
B4	**1.8, 2.0 i.e., 2.4 TD, 2.5 i.e. V6** 10/84 - 07/87 81 -114 kW	*19-019789*	*19-019796*	
B6 Sport	**1.8, 2.0 i.e., 2.4 TD, 2.5 i.e. V6** 10/84 - 07/87 81 -114 kW	**24-011754**	**24-011761**	
ALFA ROMEO 145 (930)				
B1	**1.4 i.e., 1.4 i.e. 16V T.S., 1.6 i.e., 1.6 i.e. 16V T.S., 1.7 i.e. 16V, 1.8 i.e. 16V, 1.8 i.e. 16V T.S., 1.9 D, 1.9 JTD, 1.9 TD, 2.0 16V T.S.** 07/94 - 01/01 66 -110 kW	**12-117727** **12-117710**		VA: without ball bearing
B3	**1.4 i.e., 1.6 i.e., 1.8 i.e. 16V** 07/94 - 01/01 66 -106 kW	**36-195565**	**36-163021**	with standard chassis
B3	**1.4 i.e. 16V T.S., 1.8 i.e. 16V T.S.** 12/96 - 01/01 76 -103 kW	**36-195596**	**36-218585**	with standard chassis
B3	**1.6 i.e. 16V T.S.** 12/96 - 01/01 88 kW	**36-195589**	**36-218585**	with standard chassis; without AC
B3	**2.0 16V T.S.** 10/95 - 01/01 110 kW		**36-218585**	with standard chassis
B3	**1.9 D, 1.9 TD** 07/94 - 02/99 66 -68 kW	**36-195602**	**36-163021**	with standard chassis; without AC
B4	**1.4 i.e., 1.6 i.e., 1.7 i.e. 16V, 1.9 D, 1.9 TD** 07/94 - 12/96 66 -95 kW	i.V. i.V.	**19-019826**	
B4	**1.4 i.e. 16V T.S., 1.6 i.e. 16V T.S., 1.8 i.e. 16V, 1.8 i.e. 16V T.S., 2.0 16V Quadrifoglio, 2.0 16V T.S.** 10/95 - 01/01 76 -114 kW	**22-045461** **11-101918** SP	**19-019826**	
B4	**1.9 D, 1.9 TD** 12/96 - 02/99 66 -68 kW	**22-045461** **11-101918** SP	**19-019826**	
B4	**1.9 JTD** 02/99 - 01/01 77 kW	*22-107985* **11-101918** SP	**19-132334**	
B6 Sport	**1.4 i.e. 16V T.S., 1.6 i.e. 16V T.S., 1.8 i.e. 16V, 1.8 i.e. 16V T.S., 1.9 D, 1.9 TD, 2.0 16V Quadrifoglio, 2.0 16V T.S.** 11/96 - 01/01 66 -114 kW	**22-040374**	**24-021685**	
B6 Sport	**1.4 i.e. 16V T.S., 1.6 i.e. 16V T.S., 1.8 i.e. 16V, 1.8 i.e. 16V T.S., 1.9 D, 1.9 TD, 2.0 16V Quadrifoglio, 2.0 16V T.S.** 11/96 - 01/01 66 -114 kW	**22-040374**	**24-015714**	HA: firmer setting
B6 Sport	**1.9 JTD** 02/99 - 01/01 77 kW	*22-040381*	**24-021685**	
B6 Sport	**1.9 JTD** 02/99 - 01/01 77 kW	*22-040381*	**24-015714**	HA: firmer setting

ALFA ROMEO				
ALFA ROMEO 146 (930)				
B1	**1.4 i.e., 1.4 i.e. 16V T.S., 1.6 i.e., 1.6 i.e. 16V T.S., 1.7 i.e. 16V, 1.8 i.e. 16V T.S., 1.9 D, 1.9 JTD, 1.9 TD, 2.0 16V T.S.** 12/94 - 01/01 66 -110 kW	**12-117727** **12-117710**		VA: without ball bearing
B3	**1.4 i.e., 1.6 i.e.** 12/94 - 12/96 66 -76 kW	36-195565	**36-163021**	with standard chassis
B3	**1.4 i.e. 16V T.S., 1.8 i.e. 16V T.S.** 11/96 - 01/01 76 -106 kW	36-195596	36-218585	with standard chassis
B3	**1.6 i.e. 16V T.S.** 11/96 - 01/01 88 kW	36-195589	36-218585	with standard chassis
B3	**1.7 i.e. 16V, 1.9 D, 1.9 TD** 12/94 - 02/99 66 -95 kW		**36-163021**	with standard chassis
B3	**2.0 16V T.S.** 10/95 - 01/01 110 kW		36-218585	with standard chassis
B3	**1.9 JTD** 02/99 - 01/01 77 kW	36-195602	36-218585	with standard chassis; with AC
B4	**1.4 i.e., 1.6 i.e., 1.9 TD** 12/94 - 12/96 66 -76 kW		**19-019826**	
B4	**1.4 i.e. 16V T.S., 1.6 i.e. 16V T.S., 1.8 i.e. 16V T.S., 2.0 16V T.S.** 10/95 - 01/01 76 -110 kW	**22-045461** **11-101918** SP	**19-019826**	
B4	**1.7 i.e. 16V, 1.9 D** 12/94 - 12/96 68 -95 kW		**19-019826**	
B4	**2.0 16V Quadrifoglio** 03/98 - 01/01 114 kW		**19-019826**	
B4	**1.9 TD** 12/96 - 02/99 66 kW	**22-045461** **11-101918** SP	**19-019826**	
B4	**1.9 JTD** 02/99 - 01/01 77 kW	*22-107985* **11-101918** SP	**19-132334**	
B6 Sport	**1.4 i.e. 16V T.S., 1.6 i.e. 16V T.S., 1.8 i.e. 16V T.S., 2.0 16V T.S.** 11/96 - 01/01 76 -110 kW	**22-040374**	**24-021685**	
B6 Sport	**1.4 i.e. 16V T.S., 1.6 i.e. 16V T.S., 1.8 i.e. 16V T.S., 2.0 16V T.S.** 11/96 - 01/01 76 -110 kW	**22-040374**	**24-015714**	HA: firmer setting
B6 Sport	**1.9 JTD** 02/99 - 01/01 77 kW	*22-040381*	**24-021685**	
B6 Sport	**1.9 JTD** 02/99 - 01/01 77 kW	*22-040381*	**24-015714**	HA: firmer setting
ALFA ROMEO 147 (937)				
B3	**1.6 16V T.SPARK, 1.6 16V T.SPARK ECO** 01/01 - 77 -88 kW	36-195435	36-195428	with standard chassis
B3	**2.0 16V T.SPARK** 01/01 - 09/05 110 kW	36-195442	36-195428	with standard chassis
B3	**2.0 16V T.SPARK** 10/05 - 110 kW	36-195633	36-195428	with standard chassis
B3	**3.2 GTA** 02/03 - 184 kW	36-195459		with standard chassis

ALFA ROMEO				
ALFA ROMEO 147 (937)				
B3	**1.9 JTD, 1.9 JTD 16V, 1.9 JTDM 16V** 11/02 - 74 -103 kW	36-195619	36-195428	with standard chassis
B4	**1.6 16V T.SPARK, 1.6 16V T.SPARK ECO, 1.9 JTD, 1.9 JTD 16V, 1.9 JTDM 16V, 1.9 JTDM 8V, 2.0, 2.0 16V T.SPARK** 01/01 - 74 -121 kW	**19-132471**	**22-132482**	with standard chassis
B6 Sport	**1.6 16V T.SPARK, 1.6 16V T.SPARK ECO, 1.9 JTD, 1.9 JTD 16V, 1.9 JTDM 16V, 2.0, 2.0 16V T.SPARK, 3.2 GTA** 01/01 - 74 -184 kW	**24-027960**	**35-100324**	with standard chassis
B8	**1.6 16V T.SPARK, 1.6 16V T.SPARK ECO, 1.9 JTD, 1.9 JTD 16V, 1.9 JTDM 16V, 1.9 JTDM 8V, 2.0, 2.0 16V T.SPARK, 3.2 GTA** 01/01 - 74 -184 kW	**24-027977**	**35-100331**	with sports suspension
B12 PK	**1.6 16V T.SPARK, 1.6 16V T.SPARK ECO, 2.0, 2.0 16V T.SPARK** 01/01 - 77 -121 kW	**46-182852**		without ride height adjustment; Conditions see certificates VA: lowering (expertise): 30 mm; axle load to: 980 kg HA: lowering (expertise): 30 mm; axle load to: 980 kg
B12 PK	**1.9 JTD, 1.9 JTD 16V, 1.9 JTDM 16V, 1.9 JTDM 8V, 3.2 GTA** 02/03 - 74 -184 kW	**46-182883**		without ride height adjustment; Conditions see certificates VA: lowering (expertise): 30 mm; axle load to: 1040 kg HA: lowering (expertise): 30 mm; axle load to: 980 kg
B12 SL	**1.6 16V T.SPARK, 1.6 16V T.SPARK ECO, 1.9 JTD, 1.9 JTD 16V, 1.9 JTDM 16V, 1.9 JTDM 8V, 2.0 16V T.SPARK** 01/01 - 74 -125 kW	**46-182937**		without ride height adjustment; Conditions see certificates VA: lowering (expertise): 45-50 mm; axle load to: 1040 kg HA: lowering (expertise): 40 mm; axle load to: 980 kg
B14	**1.6 16V T.SPARK, 1.6 16V T.SPARK ECO, 1.9 JTD, 1.9 JTD 16V, 1.9 JTDM 16V, 1.9 JTDM 8V, 2.0, 2.0 16V T.SPARK, 3.2 GTA** 01/01 - 74 -184 kW	**47-119215**		with standard chassis; without ride height adjustment; Conditions see certificates; Only in connection with 2 x 60613572 VA: lowering (expertise): 30-50 mm; axle load to: 1060 kg HA: lowering (expertise): 30-50 mm; axle load to: 1000 kg
B16 PSS9	**1.6 16V T.SPARK, 1.6 16V T.SPARK ECO, 1.9 JTD, 1.9 JTD 16V, 1.9 JTDM 16V, 1.9 JTDM 8V, 2.0, 2.0 16V T.SPARK, 3.2 GTA** 01/01 - 74 -184 kW	**48-100724**		with standard chassis; Conditions see certificates; Only in connection with 2 x 60613572 VA: lowering (expertise): 30-50 mm; axle load to: 1060 kg HA: lowering (expertise): 30-50 mm; axle load to: 1000 kg
ALFA ROMEO 155 (167)				
B1	**1.6 16V T.S., 1.7 T.S., 1.7 T.S. 16V, 1.8 T.S., 1.8 T.S. Sport, 1.9 TD, 2.0 T.S., 2.0 T.S. 16V, 2.5 TD, 2.5 V6** 02/92 - 12/97 66 -121 kW	**12-117727** **12-117710**		VA: without ball bearing
B3	**1.6 16V T.S., 1.7 T.S., 1.7 T.S. 16V, 1.8 T.S., 1.8 T.S. Sport, 1.9 TD, 2.0 T.S., 2.0 T.S. 16V, 2.5 TD** 04/93 - 12/97 66 -110 kW	**36-163014**	**36-163021**	with standard chassis
B3	**2.0 16V Turbo Q4** 01/92 - 12/97 137 -140 kW	**36-163007**		with standard chassis
B3	**2.5 V6** 02/92 - 12/97 120 -121 kW	**36-163007**	**36-163021**	with standard chassis; without AC
B4	**1.6 16V T.S., 1.7 T.S., 1.7 T.S. 16V, 1.8 T.S., 1.8 T.S. Sport, 1.9 TD, 2.0 T.S., 2.0 T.S. 16V** 03/95 - 12/97 66 -110 kW	**22-045461** **11-101918** SP	**19-019826** OIO	HA: without ride height adjustment
B4	**2.5 TD, 2.5 V6** 02/92 - 09/96 92 -121 kW	*22-107985* **11-101918** SP	**19-132334** OIO	HA: without ride height adjustment

ALFA ROMEO				
ALFA ROMEO 155 (167)				
B6 Sport	**1.8 T.S., 1.8 T.S. Sport, 1.9 TD, 2.0 T.S.** 02/92 - 02/95 66 -106 kW	**22-040374**	**24-015714**	HA: firmer setting
B6 Sport	**2.5 TD, 2.5 V6** 02/92 - 09/96 92 -121 kW	*22-040381*	**24-015714**	HA: firmer setting
ALFA ROMEO 156 (932)				
B3	**1.6 16V T.SPARK, 1.8 16V T.SPARK** 09/97 - CH-Nr. 88 -106 kW	**36-195657**	**36-195428**	-> CH.Nr.: 491629; with standard chassis
B3	**1.6 16V T.SPARK, 1.8 16V T.SPARK** CH-Nr. - 09/05 88 -106 kW	**36-195640**	**36-195428**	CH.Nr.: 491630 ->; with standard chassis
B3	**2.0 16V T.SPARK** 09/97 - 10/00 114 kW	**36-195657**	**36-195428**	with standard chassis
B3	**2.0 16V T.SPARK** 09/97 - 10/00 114 kW	**36-195664**	**36-195428**	with standard chassis; with AC
B3	**3.2 GTA** 03/02 - 09/05 184 kW	**36-195688**		with standard chassis
B3	**1.9 JTD, 2.0 16V T.SPARK, 2.0 JTS** 09/97 - 09/05 77 -122 kW	**36-195664**	**36-195428**	with standard chassis
B3	**1.9 JTD** 09/97 - 05/01 77 -81 kW	**36-195671**	**36-195428**	with standard chassis; with AC
B3	**1.9 D, 1.9 JTD, 1.9 JTD 16V, 2.4 JTD, 2.5 V6 24V** 10/00 - 09/05 85 -141 kW	**36-195671**	**36-195428**	with standard chassis
B3	**2.4 JTD, 2.5 V6 24V** 09/97 - 12/01 100 -140 kW	**36-195688**	**36-195428**	with standard chassis; with AC
B3	**2.4 JTD** 03/02 - 09/05 110 kW	**36-195756**	**36-195428**	with standard chassis
B4	**1.6 16V T.SPARK, 1.8 16V T.SPARK, 1.9 JTD, 1.9 JTD 16V, 2.0 16V T.SPARK, 2.0 GLX, 2.0 JTS, 2.4 JTD, 2.5 V6 24V** 09/97 - 09/05 77 -141 kW	**22-052544** **11-101918** SP	**22-196606** i.V. SP	with standard chassis
B6 Sport	**1.6 16V T.SPARK, 1.8 16V T.SPARK, 1.9 JTD, 1.9 JTD 16V, 2.0 16V T.SPARK, 2.0 GLX, 2.0 JTS, 2.4 JTD, 2.5 V6 24V, 3.2 GTA** 09/97 - 09/05 77 -184 kW	**24-027960**	**35-047209**	with standard chassis
B8	**1.6 16V T.SPARK, 1.8 16V T.SPARK, 1.9 JTD, 1.9 JTD 16V, 2.0 16V T.SPARK, 2.0 GLX, 2.0 JTS, 2.4 JTD, 2.5 V6 24V, 3.2 GTA** 09/97 - 09/05 77 -184 kW	**24-027977**	**35-047216**	with sports suspension
B12 PK	**1.6 16V T.SPARK, 1.8 16V T.SPARK, 2.0 16V T.SPARK, 2.0 GLX, 2.0 JTS** 09/97 - 09/05 88 -122 kW	**46-182739**		without ride height adjustment; Conditions see certificates VA: lowering (expertise): 30 mm; axle load to: 1060 kg HA: lowering (expertise): 30 mm; axle load to: 1000 kg
B12 PK	**1.9 JTD, 1.9 JTD 16V, 2.4 D, 2.4 JTD, 2.5 V6 24V, 3.2 GTA** 09/97 - 09/05 77 -184 kW	**46-182753**		without ride height adjustment; Conditions see certificates VA: lowering (expertise): 30 mm; axle load to: 1060 kg HA: lowering (expertise): 30 mm; axle load to: 1000 kg
B12 SL	**1.6 16V T.SPARK, 1.8 16V T.SPARK, 2.0 16V T.SPARK, 2.0 GLX, 2.0 JTS** 09/97 - 09/05 88 -122 kW	**46-182913**		without ride height adjustment; Conditions see certificates VA: lowering (expertise): 45-50 mm; axle load to: 990 kg HA: lowering (expertise): 45-50 mm; axle load to: 980 kg
B12 SL	**1.9 JTD, 1.9 JTD 16V, 2.4 D, 2.4 JTD, 2.5 V6 24V, 3.2 GTA** 09/97 - 09/05 77 -184 kW	**46-182920**		without ride height adjustment; Conditions see certificates VA: lowering (expertise): 45-50 mm; axle load to: 1060 kg HA: lowering (expertise): 45-50 mm; axle load to: 980 kg

ALFA ROMEO

ALFA ROMEO 156 (932)

B14	**1.6 16V T.SPARK, 1.8 16V T.SPARK, 1.9 JTD, 1.9 JTD 16V, 2.0 16V T.SPARK, 2.0 GLX, 2.0 JTS, 2.4 JTD, 2.5 V6 24V, 3.2 GTA** 09/97 - 09/05 77 -184 kW	**47-119215**		with standard chassis; without ride height adjustment; Conditions see certificates VA: lowering (expertise): 30-50 mm; axle load to: 1060 kg HA: lowering (expertise): 30-50 mm; axle load to: 1000 kg
B16 PSS9	**1.6 16V T.SPARK, 1.8 16V T.SPARK, 1.9 JTD, 1.9 JTD 16V, 2.0 16V T.SPARK, 2.0 GLX, 2.0 JTS, 2.4 JTD, 2.5 V6 24V, 3.2 GTA** 09/97 - 09/05 77 -184 kW	**48-100724**		with standard chassis; without ride height adjustment; Conditions see certificates VA: lowering (expertise): 30-50 mm; axle load to: 1060 kg HA: lowering (expertise): 30-50 mm; axle load to: 1000 kg

ALFA ROMEO 156 Sportwagon (932)

B3	**1.6 16V T.SPARK., 1.8 16V T.SPARK** 05/00 - 12/01 88 -103 kW	36-195640	36-195718	without AC
B3	**1.6 16V T.SPARK.** 01/02 - 05/06 88 kW	36-195657	36-195749	CH.Nr.: 491629 ->
B3	**1.8 16V T.SPARK, 1.9 D, 1.9 JTD, 2.4 D, 2.4 JTD, 2.5 V6 24V** 01/02 - 05/06 85 -141 kW	36-195640	36-195749	CH.Nr.: 491629 ->; with standard chassis
B3	**2.0 JTS** 03/02 - 05/06 122 kW	36-195664	36-195749	with standard chassis
B4	**1.6 16V T.SPARK., 1.8 16V T.SPARK, 1.9 JTD, 1.9 JTD 16V, 2.0 16V T.SPARK, 2.0 JTS, 2.4 JTD, 2.5 V6 24V** 05/00 - 05/06 77 -141 kW	**22-052544**		with standard chassis
B6 Sport	**1.6 16V T.SPARK., 1.8 16V T.SPARK, 1.9 JTD, 1.9 JTD 16V, 2.0 16V T.SPARK, 2.0 JTS, 2.4 JTD, 2.5 V6 24V, 3.2 GTA** 05/00 - 05/06 77 -184 kW	**24-027960**	**35-047209**	without ride height adjustment
B8	**1.6 16V T.SPARK., 1.8 16V T.SPARK, 1.9 JTD, 1.9 JTD 16V, 2.0 16V T.SPARK, 2.0 JTS, 2.4 JTD, 2.5 V6 24V, 3.2 GTA** 05/00 - 05/06 77 -184 kW	**24-027977**	**35-047216**	without ride height adjustment
B12 PK	**1.6 16V T.SPARK., 1.8 16V T.SPARK, 2.0 16V T.SPARK, 2.0 JTS** 05/00 - 05/06 88 -122 kW	**46-182739**		without ride height adjustment; Conditions see certificates VA: lowering (expertise): 30 mm; axle load to: 1060 kg HA: lowering (expertise): 30 mm; axle load to: 1000 kg
B12 PK	**1.9 JTD, 1.9 JTD 16V, 2.4 JTD, 2.5 V6 24V, 3.2 GTA** 05/00 - 05/06 77 -184 kW	**46-182753**		without ride height adjustment; Conditions see certificates VA: lowering (expertise): 30 mm; axle load to: 1060 kg HA: lowering (expertise): 30 mm; axle load to: 1000 kg
B12 SL	**1.6 16V T.SPARK., 1.8 16V T.SPARK, 2.0 16V T.SPARK, 2.0 JTS** 05/00 - 05/06 88 -122 kW	**46-182913**		without ride height adjustment; Conditions see certificates VA: lowering (expertise): 45-50 mm; axle load to: 990 kg HA: lowering (expertise): 45-50 mm; axle load to: 980 kg
B12 SL	**1.9 JTD, 1.9 JTD 16V, 2.4 JTD, 2.5 V6 24V, 3.2 GTA** 05/00 - 05/06 77 -184 kW	**46-182920**		without ride height adjustment; Conditions see certificates VA: lowering (expertise): 45-50 mm; axle load to: 1060 kg HA: lowering (expertise): 45-50 mm; axle load to: 980 kg
B14	**1.6 16V T.SPARK., 1.8 16V T.SPARK, 1.9 JTD, 1.9 JTD 16V, 2.0 16V T.SPARK, 2.0 JTS, 2.4 JTD, 2.5 V6 24V, 3.2 GTA** 05/00 - 05/06 77 -184 kW	**47-119215**		without ride height adjustment; Conditions see certificates; Only in connection with 2 x 60613572 VA: lowering (expertise): 30-50 mm; axle load to: 1060 kg HA: lowering (expertise): 30-50 mm; axle load to: 1000 kg
B16 PSS9	**1.6 16V T.SPARK., 1.8 16V T.SPARK, 1.9 JTD, 1.9 JTD 16V, 2.0 16V T.SPARK, 2.0 JTS, 2.4 JTD, 2.5 V6 24V, 3.2 GTA** 05/00 - 05/06 77 -184 kW	**48-100724**		without ride height adjustment; Conditions see certificates; Only in connection with 2 x 60613572 VA: lowering (expertise): 30-50 mm; axle load to: 1060 kg HA: lowering (expertise): 30-50 mm; axle load from: 1000 kg

ALFA ROMEO 159

B3	**1.8 MPI** 03/07 - 103 kW		36-196128	with standard chassis

ALFA ROMEO				
ALFA ROMEO 159				
B3	**2.4 JTDM** 09/05 - 147 -154 kW	36-196081	36-196128	with standard chassis; manual transmission
B3	**2.4 JTDM** 09/05 - 147 -154 kW	36-196098	36-196128	with standard chassis; automatic transmission
B4	**1.9 JTDM 16V, 1.9 JTDM 8V, 1.9 JTS, 2.0 JTDM, 2.2 JTS, 2.4 JTDM** 09/05 - 85 -147 kW	**19-169200**	**19-169538**	
B6 Sport	**1.8 MPI, 1.8 TBi, 1.9 JTDM 16V, 1.9 JTDM 8V, 1.9 JTS, 2.0 JTDM, 2.2 JTS, 2.4 JTDM, 2.4 JTDM Q4, 3.2 JTS, 3.2 JTS Q4** 12/05 - 85 -191 kW	**24-128780**	**24-128797**	
B8	**1.8 MPI, 1.8 TBi, 1.9 JTDM 16V, 1.9 JTDM 8V, 1.9 JTS, 2.0 JTDM, 2.2 JTS, 2.4 JTDM, 2.4 JTDM Q4, 3.2 JTS, 3.2 JTS Q4** 12/05 - 85 -191 kW	**24-128803**	**24-128810**	
B12 PK	**1.8 MPI, 1.8 TBi, 1.9 JTDM 16V, 1.9 JTDM 8V, 1.9 JTS, 2.0 JTDM, 2.2 JTS** 09/05 - 85 -147 kW	**46-182760**		without ride height adjustment; Conditions see certificates VA: lowering (expertise): 30-35 mm; axle load to: 1200 kg HA: lowering (expertise): 30-35 mm; axle load to: 1100 kg
B12 PK	**2.4 JTDM, 3.2 JTS** 09/05 - 147 -191 kW	**46-182777**		without ride height adjustment; Conditions see certificates VA: lowering (expertise): 30-35 mm; axle load to: 1300 kg HA: lowering (expertise): 30-35 mm; axle load to: 1100 kg
B12 PK	**2.4 JTDM Q4, 3.2 JTS Q4** 12/05 - 154 -191 kW	**46-182807**		without ride height adjustment; Conditions see certificates VA: lowering (expertise): 30-35 mm; axle load to: 1300 kg HA: lowering (expertise): 30 mm; axle load to: 1100 kg
B12 SL	**1.8 MPI, 1.8 TBi, 1.9 JTDM 16V, 1.9 JTDM 8V, 1.9 JTS, 2.0 JTDM, 2.2 JTS** 09/05 - 85 -147 kW	**46-182951**		without ride height adjustment; Conditions see certificates VA: lowering (expertise): 40-45 mm; axle load to: 1200 kg HA: lowering (expertise): 45-50 mm; axle load to: 1000 kg
B14	**1.8 MPI, 1.8 TBi, 1.9 JTDM 16V, 1.9 JTDM 8V, 1.9 JTS, 2.0 JTDM, 2.2 JTS, 2.4 JTDM, 2.4 JTDM Q4, 3.2 JTS, 3.2 JTS Q4** 12/05 - 85 -191 kW	**47-139275**		Conditions see certificates VA: lowering (expertise): 30-50 mm; axle load to: 1300 kg HA: lowering (expertise): 30-50 mm; axle load to: 1100 kg
B16 PSS10	**1.8 MPI, 1.8 TBi, 1.9 JTDM 16V, 1.9 JTDM 8V, 1.9 JTS, 2.0 JTDM, 2.2 JTS, 2.4 JTDM, 2.4 JTDM Q4, 3.2 JTS, 3.2 JTS Q4** 12/05 - 85 -191 kW	**48-139243**		Conditions see certificates VA: lowering (expertise): 30-50 mm; axle load to: 1300 kg HA: lowering (expertise): 30-50 mm; axle load to: 1100 kg
ALFA ROMEO 159 Sportwagon				
B4	**1.8 MPI, 1.8 TBi, 1.9 JTDM 16V, 1.9 JTDM 8V, 1.9 JTS, 2.0 JTDM, 2.2 JTS, 2.4 JTDM, 2.4 JTDM Q4, 3.2 JTS, 3.2 JTS Q4** 03/06 - 85 -191 kW	**19-169200**	**19-169538**	
B6 Sport	**1.8 MPI, 1.8 TBi, 1.9 JTDM 16V, 1.9 JTDM 8V, 1.9 JTS, 2.0 JTDM, 2.2 JTS, 2.4 JTDM, 2.4 JTDM Q4, 3.2 JTS, 3.2 JTS Q4** 03/06 - 85 -191 kW	**24-128780**	**24-128797**	
B8	**1.8 MPI, 1.8 TBi, 1.9 JTDM 16V, 1.9 JTDM 8V, 1.9 JTS, 2.0 JTDM, 2.2 JTS, 2.4 JTDM, 2.4 JTDM Q4, 3.2 JTS, 3.2 JTS Q4** 03/06 - 85 -191 kW	**24-128803**	**24-128810**	
B12 PK	**1.8 MPI, 1.8 TBi, 1.9 JTDM 16V, 1.9 JTDM 8V, 1.9 JTS, 2.0 JTDM, 2.2 JTS** 03/06 - 85 -147 kW	**46-182784**		without ride height adjustment; Conditions see certificates VA: lowering (expertise): 30-35 mm; axle load to: 1200 kg HA: lowering (expertise): 25-30 mm; axle load to: 1100 kg
B12 PK	**2.4 JTDM, 3.2 JTS** 03/06 - 147 -191 kW	**46-182791**		without ride height adjustment; Conditions see certificates VA: lowering (expertise): 30-35 mm; axle load to: 1300 kg HA: lowering (expertise): 25-30 mm; axle load to: 1100 kg
B12 PK	**2.4 JTDM Q4, 3.2 JTS Q4** 03/06 - 154 -191 kW	**46-182814**		without ride height adjustment; Conditions see certificates VA: lowering (expertise): 30-35 mm; axle load to: 1300 kg HA: lowering (expertise): 30 mm; axle load to: 1100 kg

ALFA ROMEO

ALFA ROMEO 159 Sportwagon

B12 SL	**1.8 MPI, 1.8 TBi, 1.9 JTDM 16V, 1.9 JTDM 8V, 1.9 JTS, 2.0 JTDM, 2.2 JTS** 03/06 - 85 -147 kW	**46-182944**		without ride height adjustment; Conditions see certificates VA: lowering (expertise): 40-45 mm; axle load to: 1200 kg HA: lowering (expertise): 45-50 mm; axle load to: 1000 kg
B14	**1.8 MPI, 1.8 TBi, 1.9 JTDM 16V, 1.9 JTDM 8V, 1.9 JTS, 2.0 JTDM, 2.2 JTS, 2.4 JTDM, 2.4 JTDM Q4, 3.2 JTS, 3.2 JTS Q4** 03/06 - 85 -191 kW	**47-139275**		Conditions see certificates VA: lowering (expertise): 30-50 mm; axle load to: 1300 kg HA: lowering (expertise): 30-50 mm; axle load to: 1100 kg
B16 PSS10	**1.8 MPI, 1.8 TBi, 1.9 JTDM 16V, 1.9 JTDM 8V, 1.9 JTS, 2.0 JTDM, 2.2 JTS, 2.4 JTDM, 2.4 JTDM Q4, 3.2 JTS, 3.2 JTS Q4** 03/06 - 85 -191 kW	**48-139243**		Conditions see certificates VA: lowering (expertise): 30-50 mm; axle load to: 1300 kg HA: lowering (expertise): 30-50 mm; axle load to: 1100 kg

ALFA ROMEO 164 (164)

B3	**2.0 Twin Spark** 06/87 - 10/92 106 -109 kW	**36-160099**		with standard chassis; Heavy Duty Version .
B3	**2.0 T.S., 2.0 Twin Spark** 06/87 - 10/92 105 -109 kW		**36-160068**	with standard chassis
B3	**3.0, 3.0 24V, 3.0 24V Q4, 3.0 24V QV, 3.0 i.e. QV, 3.0 V6** 06/87 - 09/92 132 -171 kW	**36-160099**	**36-160051**	with standard chassis
B3	**2.5 TD** 06/87 - 09/98 84 -92 kW		**36-160068**	with standard chassis

ALFA ROMEO 166 (936)

B3	**2.0 V6** 09/98 - 151 kW	**36-196142**	**36-196173**	with standard chassis
B3	**2.5 V6 24V, 3.0 V6 24V** 09/98 - 01/03 138 -166 kW	**36-196142**	**36-196173**	with standard chassis; manual transmission
B3	**2.5 V6 24V, 3.0 V6 24V** 09/98 - 01/03 138 -166 kW	**36-196166**	**36-196173**	with standard chassis; automatic transmission
B6 Sport	**2.0 T.Spark, 2.0 V6, 2.4 JTD, 2.5 V6 24V, 3.0 V6 24V, 3.2 V6 24V** 09/98 - 100 -176 kW	**24-060974**	**24-060981**	with standard chassis
B8	**2.0 T.Spark, 2.0 V6, 2.4 JTD, 2.5 V6 24V, 3.0 V6 24V, 3.2 V6 24V** 09/98 - 100 -176 kW	**24-060998**	**24-061001**	with standard chassis

ALFA ROMEO 1750-2000

B6 Sport	**1.7, 1750, 2000** 03/68 - 12/83 80 -97 kW	**24-004633**	**24-004732**	

ALFA ROMEO ALFASUD (901)

MS	**1.2, 1.2 ti, 1.3, 1.3 SC/ti Super, 1.3 Super, 1.3 ti, 1.5 ti, 1.5 ti Sprint** 01/79 - 12/84 44 -77 kW		*24-004626*	HA: Quick Repair Service .; Used part return required !

ALFA ROMEO ALFETTA (116)

B4	**1.6, 1.8, 2.0, 2.0 TD, 2.4 TD** 07/74 - 12/84 60 -97 kW	*19-019567*	*19-019574*	
B6 Sport	**1.6, 1.8, 2.0, 2.0 TD** 07/74 - 12/84 60 -97 kW	**24-004657**	**24-004756**	

ALFA ROMEO				
ALFA ROMEO ALFETTA GT (116)				
B4	**1.6, 1.8, 2.0** 01/74 - 12/84 79 -96 kW	*19-019567*	*19-019574*	
B6 Sport	**1.6, 1.8, 2.0** 01/74 - 12/84 79 -96 kW	**24-004657**	**24-004756**	
ALFA ROMEO ARNA (920)				
B3	**1.2** 03/83 - 12/86 44 -50 kW	**36-202720**		with standard chassis
ALFA ROMEO BRERA				
B4	**1.8 TBi, 2.0 JTDM, 2.2 JTS, 2.4 JTDM 20V, 3.2 JTS, 3.2 JTS Q4** 01/06 - 125 -191 kW	**19-169200**	**19-169538**	
B6 Sport	**1.8 TBi, 2.0 JTDM, 2.2 JTS, 2.4 JTDM 20V, 3.2 JTS, 3.2 JTS Q4** 01/06 - 125 -191 kW	**24-128780**	**24-128797**	
B8	**1.8 TBi, 2.0 JTDM, 2.2 JTS, 2.4 JTDM 20V, 3.2 JTS, 3.2 JTS Q4** 01/06 - 125 -191 kW	**24-128803**	**24-128810**	
B12 PK	**2.2 JTS** 01/06 - 136 kW	**46-000057**		without ride height adjustment; Conditions see certificates VA: lowering (expertise): 25-30 mm; axle load to: 1300 kg HA: lowering (expertise): 25 mm; axle load to: 1100 kg
B12 PK	**2.4 JTDM 20V, 3.2 JTS Q4** 01/06 - 147 -191 kW	**46-000064**		without ride height adjustment; all-wheel drive; Conditions see certificates VA: lowering (expertise): 25-30 mm; axle load to: 1300 kg HA: lowering (expertise): 25 mm; axle load to: 1100 kg
B12 PK	**2.4 JTDM 20V, 3.2 JTS** 01/06 - 147 -191 kW	**46-000071**		without ride height adjustment; front wheel drive; Conditions see certificates VA: lowering (expertise): 25-30 mm; axle load to: 1300 kg HA: lowering (expertise): 25 mm; axle load to: 1100 kg
B14	**1.8 TBi, 2.0 JTDM, 2.2 JTS, 2.4 JTDM 20V, 3.2 JTS, 3.2 JTS Q4** 01/06 - 125 -191 kW	**47-139275**		Conditions see certificates VA: lowering (expertise): 30-50 mm; axle load to: 1300 kg HA: lowering (expertise): 30-50 mm; axle load to: 1100 kg
B16 PSS10	**1.8 TBi, 2.0 JTDM, 2.2 JTS, 2.4 JTDM 20V, 3.2 JTS, 3.2 JTS Q4** 01/06 - 125 -191 kW	**48-139243**		Conditions see certificates VA: lowering (expertise): 30-50 mm; axle load to: 1300 kg HA: lowering (expertise): 30-50 mm; axle load to: 1100 kg
ALFA ROMEO GIULIA				
B6 Sport	**1300 Super, 1300 TI, 1600 Super** 06/64 - 12/78 62 -76 kW	**24-004633**	**24-004732**	
ALFA ROMEO GIULIA GT				
B6 Sport	**1300 Super, 1600 Super** 01/74 - 12/78 64 -76 kW	**24-004633**	**24-004732**	
ALFA ROMEO GIULIETTA (116)				
B4	**1.3, 1.6, 1.8, 1.8 Turbo, 2.0, 2.0 TD, 2.0 Turbo** 10/77 - 06/84 61 -125 kW	*19-019567*	*19-019574*	
B6 Sport	**1.3, 1.6, 1.8, 1.8 Turbo, 2.0, 2.0 Turbo** 10/77 - 06/84 66 -125 kW	**24-004657**	**24-004756**	
ALFA ROMEO GIULIETTA (940)				
B4	**1.4 TB, 1.6 JTDM, 1.8 TBi, 1.9 CDTI 16V, 2.0 JTDM** 04/10 - 77 -173 kW	**22-195302** **22-195319**	**19-195322**	with standard chassis

ALFA ROMEO

ALFA ROMEO GIULIETTA (940)

B6 Sport	**1.4 TB, 1.6 JTDM, 1.8 TBi, 1.9 CDTI 16V, 2.0 JTDM** 04/10 - 77 -173 kW	**35-195047** **35-195054**	**24-195065**	with standard chassis
B8	**1.4 TB, 1.6 JTDM, 1.8 TBi, 1.9 CDTI 16V, 2.0 JTDM** 04/10 - 77 -173 kW	**35-195078** **35-195085**	**24-195096**	with sports suspension
B12 PK	**1.4 TB, 1.6 JTDM, 1.8 TBi, 1.9 CDTI 16V, 2.0 JTDM** 04/10 - 77 -173 kW	**46-223500**		Conditions see certificates VA: lowering (expertise): 30-35 mm; axle load to: 1100 kg HA: lowering (expertise): 30 mm; axle load to: 850 kg

ALFA ROMEO GT

B6 Sport	**1.7, 1300 Junior, 1600, A 1600, V 1750, V 2000** 01/67 - 12/77 64 -96 kW	**24-004633**	**24-004732**	

ALFA ROMEO GT

B3	**1.8 TS** 11/03 - 103 kW	**36-195435**	**36-195428**	with standard chassis
B3	**2.0 JTS** 11/03 - 119 -121 kW	**36-195435**		with standard chassis
B3	**1.9 JTD** 11/03 - 09/05 110 kW	**36-195442**	**36-195428**	
B4	**1.8 TS, 1.9 JTD, 2.0 JTS, 3.2 GTA** 11/03 - 103 -176 kW	**22-052544** **11-101918** SP	**i.V.** SP	with standard chassis
B6 Sport	**1.8 TS, 1.9 JTD, 2.0 JTS, 3.2 GTA** 11/03 - 103 -176 kW	**24-027960**	**35-047209**	with standard chassis
B8	**1.8 TS, 1.9 JTD, 2.0 JTS, 3.2 GTA** 11/03 - 103 -176 kW	**24-027977**	**35-047216**	with sports suspension
B12 PK	**1.8 TS, 1.9 JTD, 2.0 JTS** 11/03 - 103 -125 kW	**46-188434**		Conditions see certificates VA: lowering (expertise): 25 mm; axle load to: 990 kg HA: lowering (expertise): 25 mm; axle load to: 980 kg
B12 PK	**3.2 GTA** 11/03 - 176 kW	**46-188441**		Conditions see certificates VA: lowering (expertise): 20 mm; axle load to: 1040 kg HA: lowering (expertise): 25 mm; axle load to: 980 kg
B14	**1.8 TS, 1.9 JTD, 2.0 JTS, 3.2 GTA** 11/03 - 103 -176 kW	**47-119215**		with standard chassis; Conditions see certificates VA: lowering (expertise): 30-50 mm; axle load to: 1060 kg HA: lowering (expertise): 30-50 mm; axle load to: 1000 kg
B16 PSS9	**1.8 TS, 1.9 JTD, 2.0 JTS, 3.2 GTA** 11/03 - 103 -176 kW	**48-100724**		with standard chassis; Conditions see certificates VA: lowering (expertise): 30-50 mm; axle load to: 1060 kg HA: lowering (expertise): 30-50 mm; axle load to: 1000 kg

ALFA ROMEO GTA Coupe

B6 Sport	**1.3 Junior** 05/68 - 12/76 81 -117 kW	**24-004633**	**24-004732**	

ALFA ROMEO GTV (116)

B4	**2.0, 2.0 Turbodelta, 6 2.5** 11/80 - 02/87 94 -116 kW	*19-019789*	*19-019796*	
B6 Sport	**2.0** 07/78 - 01/86 94 -96 kW	**24-004657**	**24-004756**	

ALFA ROMEO GTV (916C_)

B3	**1.8 16V, 2.0 T.SPARK 16V** 06/95 - 03/03 106 -114 kW	**36-195473**	**36-195480**	with standard chassis

ALFA ROMEO				
ALFA ROMEO GTV (916C_)				
B3	**2.0 V6 Turbo** 06/95 - 148 kW		36-195480	with standard chassis
B3	**3.0 V6 24V** 10/96 - 160 -162 kW	36-195503	36-195480	
B6 Sport	**1.8 16V, 2.0 T.SPARK 16V** 06/95 - 106 -114 kW	*35-043126*	*24-026055* OIL	
B6 Sport	**2.0 JTS, 2.0 V6 Turbo** 06/95 - 121 -148 kW		*24-026055* OIL	
B6 Sport	**3.0 V6 24V, 3.2 V6 24V** 10/96 - 160 -176 kW		*24-026055* OIL	
ALFA ROMEO MITO (ZAR 955)				
B1	**1.3 JTDM, 1.4, 1.4 TB, 1.4 Turbo, 1.6 JTDM** 09/08 - 51 -125 kW		**12-226467** **12-226450**	
B4	**1.3 JTDM, 1.4, 1.4 TB, 1.4 Turbo, 1.6 JTDM** 09/08 - 58 -125 kW	**22-172839** **22-172846**	**19-172859** O	
B6 Sport	**1.3 JTDM, 1.4, 1.4 TB, 1.4 Turbo, 1.6 JTDM** 09/08 - 58 -125 kW	**35-140238** **35-140245**	**24-140256** O	
B8	**1.3 JTDM, 1.4, 1.4 TB, 1.4 Turbo, 1.6 JTDM** 09/08 - 58 -125 kW	**35-158790** **35-158806**	**24-158879** O	
B12 PK	**1.3 JTDM, 1.4, 1.4 TB, 1.4 Turbo** 09/08 - 58 -125 kW	**46-182890**		without electronic suspension control; Conditions see certificates VA: lowering (expertise): 30 mm; axle load to: 955 kg HA: without ride height adjustment; lowering (expertise): 30 mm; axle load to: 850 kg
B12 PK	**1.6 JTDM** 09/08 - 85 -88 kW	**46-182906**		without electronic suspension control; Conditions see certificates VA: lowering (expertise): 30 mm; axle load to: 1000 kg HA: without ride height adjustment; lowering (expertise): 30 mm; axle load to: 850 kg
B14	**1.3 JTDM, 1.4, 1.4 TB, 1.4 Turbo, 1.6 JTDM** 09/08 - 58 -125 kW	**47-164499**		VA: Conditions see certificates; lowering (expertise): 35-45 mm; axle load to: 1000 kg HA: lowering (expertise): 30-45 mm; axle load to: 850 kg
ALFA ROMEO MONTREAL				
B6 Sport	**2.6** 12/72 - 03/79 143 kW	**24-004633** O	**24-004732** I	
ALFA ROMEO SPIDER (105)				
B6 Sport	**1.7, 1300, 1600, 1750, 2000** 01/67 - 12/77 64 -96 kW	**24-004633** O	**24-004732** I	
ALFA ROMEO SPIDER (115)				
B3	**1600, 2000, 2000 Veloce** 03/76 - 12/93 76 -93 kW	36-195473	36-195480	with standard chassis
B6 Sport	**1600, 2.0, 2000, 2000 Veloce** 01/74 - 12/93 76 -93 kW	**24-004633** O	**24-004732** I	
ALFA ROMEO SPIDER (916S_)				
B3	**1.8 16V, 2.0 T.SPARK 16V** 01/99 - 03/03 106 -110 kW	36-195473	36-195534	with standard chassis
B3	**2.0 T.SPARK 16V** 06/95 - 06/97 110 kW		36-195480	with standard chassis

ALFA ROMEO				
ALFA ROMEO SPIDER (916S_)				
B3	**2.0 T.SPARK 16V** 07/97 - 12/98 110 kW	**36-195473**	**36-195480**	with standard chassis
B3	**2.0 JTS, 2.0 T.SPARK 16V** 05/98 - 04/05 114 -121 kW	**36-195473**	**36-195534**	with standard chassis
B3	**2.0 V6 Turbo, 3.0 V6** 01/98 - 04/05 141 -160 kW		**36-195534**	with standard chassis
B3	**3.0 V6** 06/95 - 12/97 141 kW		**36-195480**	with standard chassis
B3	**3.0 V6 24V, 3.2 V6 24V** 01/99 - 04/05 162 -176 kW	**36-195503**	**36-195497**	with standard chassis
B6 Sport	**1.8 16V, 2.0 JTS, 2.0 T.SPARK 16V** 06/95 - 04/05 106 -121 kW	*35-043126*	*24-026055* OHC	
B6 Sport	**2.0 V6 Turbo, 3.0 V6** 01/98 - 04/05 141 -148 kW		*24-026055* OHC	
B6 Sport	**3.0 V6** 06/95 - 12/97 141 kW		*24-026055* OHC	
B6 Sport	**3.0 V6, 3.0 V6 24V, 3.2 V6 24V** 01/99 - 04/05 160 -176 kW		*24-026055* OHC	
ALFA ROMEO SPIDER (939)				
B4	**1.8 TBi, 2.0 JTDM, 2.2 JTS, 2.4 JTDM, 3.2 JTS, 3.2 JTS Q4** 09/06 - 125 -191 kW	**19-169200** L	**19-169538** O	
B6 Sport	**1.8 TBi, 2.0 JTDM, 2.2 JTS, 2.4 JTDM, 3.2 JTS, 3.2 JTS Q4** 09/06 - 125 -191 kW	**24-128780** X	**24-128797** O	
B8	**1.8 TBi, 2.0 JTDM, 2.2 JTS, 2.4 JTDM, 3.2 JTS, 3.2 JTS Q4** 09/06 - 125 -191 kW	**24-128803** X	**24-128810** O	
B12 PK	**1.8 TBi, 2.2 JTS** 09/06 - 136 -147 kW	**46-000088**		without ride height adjustment; Conditions see certificates VA: lowering (expertise): 20 mm; axle load to: 1300 kg HA: lowering (expertise): 20 mm; axle load to: 1100 kg
B12 PK	**3.2 JTS Q4** 09/06 - 191 kW	**46-000040**		without ride height adjustment; Conditions see certificates VA: lowering (expertise): 20 mm; axle load to: 1300 kg HA: lowering (expertise): 20 mm; axle load to: 1100 kg
B12 PK	**2.4 JTDM, 3.2 JTS** 04/07 - 147 -191 kW	**46-000095**		without ride height adjustment; Conditions see certificates VA: lowering (expertise): 20 mm; axle load to: 1300 kg HA: lowering (expertise): 20 mm; axle load to: 1100 kg
B14	**1.8 TBi, 2.0 JTDM, 2.2 JTS, 2.4 JTDM, 3.2 JTS, 3.2 JTS Q4** 09/06 - 125 -191 kW	**47-139275**		Conditions see certificates VA: lowering (expertise): 30-50 mm; axle load to: 1300 kg HA: lowering (expertise): 30-50 mm; axle load to: 1100 kg
B16 PSS10	**1.8 TBi, 2.0 JTDM, 2.2 JTS, 2.4 JTDM, 3.2 JTS, 3.2 JTS Q4** 09/06 - 125 -191 kW	**48-139243**		Conditions see certificates VA: lowering (expertise): 30-50 mm; axle load to: 1300 kg HA: lowering (expertise): 30-50 mm; axle load to: 1100 kg
ALPINA				
ALPINA B3 (E30)				
B6 Sport	**2.7** 09/87 - 06/92 150 kW	**34-003350**	**24-020275** O	VA: outside diameter strut 51 mm HA: charakteristic: 160/55
B6 Sport	**2.7** 09/87 - 06/92 150 kW	**34-003350**	**24-060653** O	VA: outside diameter strut 51 mm HA: charakteristic: 140/60

ALPINA			
ALPINA B3 Estate (E30)			
B6 Sport **2.7** 09/87 - 06/92 150 kW	**34-003350**	**24-020275**	VA: outside diameter strut 51 mm HA: charakteristic: 160/55
B6 Sport **2.7** 09/87 - 06/92 150 kW	**34-003350**	**24-060653**	VA: outside diameter strut 51 mm HA: charakteristic: 140/60
ALPINA B3 Convertible (E30)			
B6 Sport **2.7** 09/87 - 06/92 150 kW	**34-003350**	**24-020275**	VA: outside diameter strut 51 mm HA: charakteristic: 160/55
B6 Sport **2.7** 09/87 - 06/92 150 kW	**34-003350**	**24-060653**	VA: outside diameter strut 51 mm HA: charakteristic: 140/60
ALPINA B3 (E36)			
B6 Sport **3.0, 3.2** 04/93 - 04/99 184 -195 kW	**35-044024** **35-044031**	**24-024532**	
ALPINA B3 Estate (E36)			
B6 Sport **3.0, 3.2** 04/93 - 03/99 184 -195 kW	**35-044024** **35-044031**	**24-024532**	
ALPINA B3 Coupe (E36)			
B6 Sport **3.2** 04/96 - 03/99 195 kW	**35-044024** **35-044031**	**24-024532**	
ALPINA B3 Convertible (E36)			
B6 Sport **3.0, 3.2** 04/93 - 03/99 184 -195 kW	**35-044024** **35-044031**	**24-024532**	
ALPINA B3 (E46)			
B8 **3.3 All-wheel Drive** 09/01 - 07/02 206 kW	**22-052834** **22-052841**	**24-068666**	VA: serie production spring seat must be used
ALPINA B3 Estate (E46)			
B8 **3.3 All-wheel Drive** 09/01 - 07/02 206 kW	**22-052834** **22-052841**	**24-068666**	VA: serie production spring seat must be used
ALPINA B10 (E39)			
B8 **3.2, 3.3, 4.6 V8, 4.8 V8** 12/96 - 191 -276 kW	**35-114093**	**24-028295**	with M-technics; without electronic suspension control; without ride height adjustment; without pneumatic suspension
ALPINA B10 Estate (E39)			
B8 **3.2, 3.3, 4.6 V8, 4.8 V8** 08/97 - 191 -276 kW	*35-118657*	**24-060967**	with M-technics HA: with air suspension
ALPINA B12 Coupe (E31)			
B6 Sport **5.0, 5.7** 06/90 - 12/96 258 -306 kW	**34-110096**	**24-108096**	without electronic suspension control

ASTON MARTIN				
ASTON MARTIN DB9 Coupe				
MS MDS	**4.2 V8, 5.9 V12** 01/04 - 283 -331 kW	*26-181943*	*26-181950*	mark: GT1 VA: Mechanically adjustable shock strength; Height Adjustable HA: Mechanically adjustable shock strength; Height Adjustable
MS MDS	**4.2 V8, 5.9 V12** 01/04 - 283 -331 kW	*26-182025*	*26-182032*	mark: GT3 VA: Mechanically adjustable shock strength; Height Adjustable HA: Mechanically adjustable shock strength; Height Adjustable
ASTON MARTIN DB9 Convertible				
MS MDS	**5.9** 04/04 - 331 kW	*26-181943*	*26-181950*	mark: GT1 VA: Mechanically adjustable shock strength; Height Adjustable HA: Mechanically adjustable shock strength; Height Adjustable
MS MDS	**5.9** 04/04 - 331 kW	*26-182025*	*26-182032*	mark: GT3 VA: Mechanically adjustable shock strength; Height Adjustable HA: Mechanically adjustable shock strength; Height Adjustable
AUDI				
AUDI A1				
B1	**1.2 TFSI, 1.6 TDI, 2.0 TDI** 05/10 - 63 -105 kW	**12-116966**		VA: with ball bearing
B1	**1.4 TFSI** 05/10 - 90 -136 kW	**12-116966**		VA: with ball bearing; Engine Code: CAXA
B4	**1.2 TFSI, 1.4 TFSI, 1.6 TDI, 2.0 TDI** 05/10 - 63 -136 kW	**22-183705**	**19-109572**	
B6 Sport	**1.2 TFSI, 1.4 TFSI, 1.6 TDI, 2.0 TDI** 05/10 - 63 -136 kW	**35-168560**	**24-067898**	
B8	**1.2 TFSI, 1.4 TFSI, 1.6 TDI, 2.0 TDI** 05/10 - 63 -136 kW	**35-168577**	**24-067904**	
B12 PK	**1.2 TFSI, 1.4 TFSI** 05/10 - 63 -136 kW	**46-195197**		Conditions see certificates VA: lowering (expertise): 20 mm; axle load to: 880 kg HA: lowering (expertise): 15 mm; axle load to: 800 kg
B12 PK	**1.4 TFSI, 1.6 TDI** 05/10 - 66 -136 kW	**46-195203**		Conditions see certificates VA: lowering (expertise): 20 mm; axle load to: 930 kg HA: lowering (expertise): 15 mm; axle load to: 800 kg
B14	**1.2 TFSI, 1.4 TFSI, 1.6 TDI, 2.0 TDI** 05/10 - 63 -136 kW	**47-168091**		Conditions see certificates VA: lowering (expertise): 30-45 mm; axle load to: 920 kg HA: lowering (expertise): 30-45 mm; axle load to: 775 kg
B16 PSS9	**1.2 TFSI, 1.4 TFSI, 1.6 TDI, 2.0 TDI** 05/10 - 63 -136 kW	**48-168229**		Conditions see certificates VA: lowering (expertise): 30-45 mm; axle load to: 920 kg HA: lowering (expertise): 30-45 mm; axle load to: 775 kg
AUDI A1 Sportback (8XA)				
B1	**1.2 TFSI, 1.4 TFSI, 1.6 TDI, 2.0 TDI** 11/11 - 63 -136 kW	**12-116966**		VA: with ball bearing
B4	**1.2 TFSI, 1.4 TFSI, 1.6 TDI, 2.0 TDI** 11/11 - 63 -136 kW	**22-183705**	**19-109572**	
B6 Sport	**1.2 TFSI, 1.4 TFSI, 1.6 TDI, 2.0 TDI** 11/11 - 63 -136 kW	**35-168560**	**24-067898**	
B8	**1.2 TFSI, 1.4 TFSI, 1.6 TDI, 2.0 TDI** 11/11 - 63 -136 kW	**35-168577**	**24-067904**	

AUDI

AUDI A1 Sportback (8XA)

B12 PK	**1.2 TFSI, 1.4 TFSI** 11/11 - 63 -136 kW	**46-195197**		Conditions see certificates VA: lowering (expertise): 20 mm; axle load to: 880 kg HA: lowering (expertise): 15 mm; axle load to: 800 kg
B12 PK	**1.4 TFSI, 1.6 TDI** 11/11 - 66 -136 kW	**46-195203**		Conditions see certificates VA: lowering (expertise): 20 mm; axle load to: 930 kg HA: lowering (expertise): 15 mm; axle load to: 800 kg
B14	**1.2 TFSI, 1.4 TFSI, 1.6 TDI, 2.0 TDI** 11/11 - 63 -136 kW	**47-168091**		Conditions see certificates VA: lowering (expertise): 30-45 mm; axle load to: 920 kg HA: lowering (expertise): 30-45 mm; axle load to: 775 kg
B16 PSS9	**1.2 TFSI, 1.4 TFSI, 1.6 TDI, 2.0 TDI** 11/11 - 63 -136 kW	**48-168229**		Conditions see certificates VA: lowering (expertise): 30-45 mm; axle load to: 920 kg HA: lowering (expertise): 30-45 mm; axle load to: 775 kg

AUDI A2 (8Z0)

B1	**1.2 TDI, 1.4, 1.4 TDI, 1.6 FSI** 02/00 - 08/05 45 -81 kW	**12-225323**	**12-117840**	VA: with ball bearing
B3	**1.4** 02/00 - 08/05 55 kW	**37-147662**	**36-147700**	with standard chassis; with AC
B3	**1.4** 02/00 - 08/05 55 kW	**37-147679**	**36-147717**	with standard chassis; Heavy Duty Version .
B3	**1.2 TDI** 03/01 - 08/05 45 kW	**37-147686**	**36-147694**	with standard chassis
B3	**1.2 TDI** 03/01 - 08/05 45 kW	**37-147662**	**36-147700**	with standard chassis; Heavy Duty Version .
B3	**1.4 TDI, 1.6 FSI** 02/00 - 08/05 55 -81 kW	**37-147679**	**36-147717**	with standard chassis
B4	**1.4, 1.4 TDI, 1.6 FSI** 02/00 - 08/05 55 -81 kW	**22-105813** **11-101321** SP	**19-106120** i.V. SP	with standard chassis
B4	**1.2 TDI** 03/01 - 08/05 45 kW		**19-106120** i.V. SP	
B6 Sport	**1.4, 1.4 TDI, 1.6 FSI** 02/00 - 08/05 55 -81 kW	**35-052173**	**24-067898**	
B8	**1.4, 1.4 TDI, 1.6 FSI** 02/00 - 08/05 55 -81 kW	**35-052180**	**24-067904**	

AUDI A3 (8L1)

B1	**1.6, 1.8, 1.8 T, 1.8 T quattro, 1.9 TDI, 1.9 TDI quattro** 09/96 - 66 -132 kW	**12-116966**	**12-117079**	VA: with ball bearing HA: without ball bearing; Material: Rubber/Metal; Material: Aluminium
B3	**1.6** 09/96 - 74 -75 kW	**37-131333**	**36-131044**	with standard chassis
B3	**1.8, 1.8 T, 1.9 TDI** 09/96 - 66 -132 kW	**37-131197**	**36-131044**	with standard chassis
B4	**1.6, 1.8, 1.8 T, 1.9 TDI** 09/96 - 66 -132 kW	**22-045744** **11-103455** SP	**19-029160** **11-115755** SP	with standard chassis
B4	**1.6, 1.8, 1.8 T, 1.9 TDI** 09/96 - 66 -132 kW	**22-045751** **11-103455** SP	**19-029177** **11-115755** SP	with sports suspension
B4	**1.6, 1.8, 1.8 T, 1.9 TDI** 09/96 - 66 -132 kW	**22-045744** **11-103455** SP	**19-140032** **11-115755** SP	with off-road suspension
B4	**1.8 T quattro, 1.9 TDI quattro** 12/96 - 96 -132 kW	**22-145550**	**19-145570**	with standard chassis

AUDI

AUDI A3 (8L1)

B4	**1.8 T quattro, 1.9 TDI quattro** 12/96 - 96 -132 kW	**22-045751** **11-103455** SP	i.V.	with sports suspension
B6 Sport	**1.6, 1.8, 1.8 T, 1.9 TDI** 09/96 - 66 -132 kW	**35-044079**	**24-025430** **11-115755** SP	VA: Mono Tube Upside Down
B6 Sport	**1.8 T quattro, 1.9 TDI quattro, S3 quattro** 12/96 - 96 -165 kW	**35-046370**	**24-060349**	
B8	**1.6, 1.8, 1.8 T, 1.9 TDI** 09/96 - 66 -132 kW	**35-044086**	**24-025447** **11-115755** SP	VA: Mono Tube Upside Down
B8	**1.6, 1.8, 1.8 T, 1.9 TDI** 09/96 - 66 -132 kW	**11-103455** SP	**24-025447** **11-115755** SP	VA: twin-tube
B8	**1.8 T quattro, 1.9 TDI quattro, S3 quattro** 12/96 - 96 -165 kW	**35-046387**	**24-060356**	VA: Mono Tube Upside Down
B10	**1.6, 1.8, 1.8 T, 1.9 TDI** 09/96 - 66 -132 kW	**46-111890**		Conditions see certificates VA: lowering (expertise): 50 mm; axle load to: 980 kg HA: lowering (expertise): 40 mm; axle load to: 1070 kg
B10	**1.6, 1.8, 1.8 T, 1.9 TDI** 09/96 - 66 -132 kW	**46-111906**		Conditions see certificates VA: lowering (expertise): 50 mm; axle load from: 981 kg HA: lowering (expertise): 40 mm; axle load to: 1070 kg
B12 PK	**1.6, 1.8, 1.8 T** 09/96 - 74 -132 kW	**46-180148**		Conditions see certificates; manual transmission VA: lowering (expertise): 30 mm; axle load to: 990 kg HA: without ride height adjustment; lowering (expertise): 25 mm; axle load to: 930 kg
B12 PK	**1.8 T, 1.9 TDI** 09/96 - 66 -132 kW	**46-180162**		Conditions see certificates; automatic transmission VA: lowering (expertise): 30 mm; axle load to: 1020 kg HA: without ride height adjustment; lowering (expertise): 30 mm; axle load to: 930 kg
B12 PK	**1.8 T quattro, 1.9 TDI quattro** 12/96 - 96 -132 kW	**46-180179**		Conditions see certificates VA: lowering (expertise): 30 mm; axle load to: 1050 kg HA: without ride height adjustment; lowering (expertise): 25 mm; axle load to: 1120 kg
B12 PK	**S3 quattro** 03/99 - 154 -165 kW	**46-180186**		Conditions see certificates VA: lowering (expertise): 25 mm; axle load to: 1050 kg HA: without ride height adjustment; lowering (expertise): 20 mm; axle load to: 1120 kg
B12 PK	**1.9 TDI** 09/96 - 66 -96 kW	**46-180155**		Conditions see certificates; manual transmission VA: lowering (expertise): 30 mm; axle load to: 990 kg HA: without ride height adjustment; lowering (expertise): 25 mm; axle load to: 930 kg
B12 SL	**1.6, 1.8, 1.8 T, 1.9 TDI** 09/96 - 66 -132 kW	**46-180216**		Conditions see certificates VA: lowering (expertise): 45-50 mm; axle load to: 950 kg HA: without ride height adjustment; lowering (expertise): 35-40 mm; axle load to: 1000 kg
B12 SL	**1.8, 1.8 T, 1.9 TDI** 09/96 - 66 -132 kW	**46-180223**		Conditions see certificates VA: lowering (expertise): 45-50 mm; axle load to: 1000 kg HA: without ride height adjustment; lowering (expertise): 35-40 mm; axle load to: 1000 kg
B14	**1.6, 1.8, 1.8 T, 1.9 TDI** 09/96 - 66 -132 kW	**47-124851**		Spacers required for several wheel/tyre combinations; Conditions see certificates VA: lowering (expertise): 25-45 mm; axle load to: 1060 kg HA: lowering (expertise): 20-40 mm; axle load to: 1010 kg
B14	**1.8 T quattro, 1.9 TDI quattro, S3 quattro** 12/96 - 96 -165 kW	**47-080416**		Spacers required for several wheel/tyre combinations; Conditions see certificates VA: lowering (expertise): 30-50 mm; axle load to: 1110 kg HA: lowering (expertise): 30-50 mm; axle load to: 1080 kg
B16 PSS9	**1.6, 1.8, 1.8 T, 1.9 TDI** 09/96 - 66 -132 kW	**48-080651**		Spacers required for several wheel/tyre combinations; Conditions see certificates VA: lowering (expertise): 25-45 mm; axle load to: 1060 kg HA: lowering (expertise): 20-40 mm; axle load to: 1010 kg
B16 PSS9	**1.8 T quattro, 1.9 TDI quattro, S3 quattro** 12/96 - 96 -165 kW	**48-080422**		Spacers required for several wheel/tyre combinations; Conditions see certificates VA: lowering (expertise): 30-50 mm; axle load to: 1110 kg HA: lowering (expertise): 30-50 mm; axle load to: 1080 kg

AUDI				
AUDI A3 (8P1)				
B1	**1.2 TSI, 1.4 TFSI, 1.6, 1.6 FSI, 1.6 TDI, 1.8 T, 1.8 TFSI, 1.8 TFSI quattro, 1.9 TDI, 2.0, 2.0 FSI, 2.0 TDI, 2.0 TDI quattro, 2.0 TDI 16V, 2.0 TDI 16V quattro, 2.0 TDI quattro, 2.0 TFSI, 2.0 TFSI quattro, 3.2 V6 quattro, S3 quattro** 11/06 - 66 -195 kW	**12-224074**	**12-224081**	VA: with ball bearing HA: without ball bearing
B3	**1.4 TFSI** 09/07 - 92 kW	**37-133030**	**36-147786**	with standard chassis
B3	**1.6, 1.6 FSI** 05/03 - 75 -85 kW	**37-133030**	**36-147762**	with standard chassis
B3	**1.6, 1.6 FSI** 05/03 - 75 -85 kW	**37-147747**	**36-147786**	with standard chassis; Heavy Duty Version .
B3	**1.8 TFSI** 11/06 - 118 kW	**36-199624**		with sports suspension
B3	**2.0 TFSI quattro** 09/04 - 147 kW	**37-147754**	**36-147786**	with standard chassis; Heavy Duty Version .
B3	**1.6 TDI** 05/09 - 66 -77 kW	**37-147747**	**36-147762**	with standard chassis
B3	**1.6 TDI** 05/09 - 66 -77 kW	**37-147730**	**36-147786**	with standard chassis; Heavy Duty Version .
B3	**1.9 TDI, 2.0 FSI** 05/03 - 77 -110 kW	**37-147747**	**36-147762**	with standard chassis
B3	**1.9 TDI, 2.0 FSI** 05/03 - 77 -110 kW	**37-147730**	**36-147786**	with standard chassis; Heavy Duty Version .
B3	**2.0 TDI, 2.0 TFSI quattro** 05/03 - 100 -147 kW	**37-147730**	**36-147786**	with standard chassis
B3	**2.0 TDI** 05/03 - 100 -125 kW	**37-147754**	**36-147793**	with standard chassis; Heavy Duty Version .
B3	**2.0 TDI quattro, 2.0 TDI quattro** 05/03 - 100 -125 kW	**37-147754**	**36-147786**	with standard chassis
B3	**2.0 TDI quattro, 2.0 TDI quattro** 05/03 - 100 -125 kW		**36-147793**	with standard chassis; Heavy Duty Version .
B3	**2.0 TDI 16V** 05/03 - 103 kW	**37-147730**	**36-147786**	with standard chassis
B3	**2.0 TDI 16V** 05/03 - 103 kW	**37-147754**	**36-147793**	with standard chassis; Heavy Duty Version .
B3	**2.0 TDI 16V quattro** 08/04 - 103 kW	**37-147754**	**36-147786**	with standard chassis
B3	**2.0 TDI 16V quattro** 08/04 - 103 kW		**36-147793**	with standard chassis; Heavy Duty Version .
B4	**1.2 TSI, 1.4 TFSI, 1.6, 1.6 FSI, 1.6 TDI, 1.8 T, 1.8 TFSI, 1.8 TFSI quattro, 1.9 TDI, 2.0, 2.0 FSI, 2.0 TDI, 2.0 TDI quattro, 2.0 TDI 16V, 2.0 TDI 16V quattro, 2.0 TDI quattro, 2.0 TFSI, 2.0 TFSI quattro** 09/04 - 66 -147 kW	**22-131607**	**19-127439**	with standard chassis; without electronic suspension control; mark: G02 VA: Øa: 50 mm

AUDI

AUDI A3 (8P1)

B4	**1.2 TSI, 1.4 TFSI, 1.6, 1.6 FSI, 1.6 TDI, 1.8 T, 1.8 TFSI, 1.8 TFSI quattro, 1.9 TDI, 2.0, 2.0 FSI, 2.0 TDI, 2.0 TDI quattro, 2.0 TDI 16V, 2.0 TDI 16V quattro, 2.0 TDI quattro, 2.0 TFSI, 2.0 TFSI quattro, 3.2 V6 quattro** 07/03 - 66 -184 kW	**22-131614**	**19-127439**	with standard chassis; without electronic suspension control; mark: G07, G08 VA: Øa: 55 mm
B4	**1.2 TSI, 1.4 TFSI, 1.6, 1.6 FSI, 1.6 TDI, 1.8 T, 1.8 TFSI, 1.8 TFSI quattro, 1.9 TDI, 2.0, 2.0 FSI, 2.0 TDI, 2.0 TDI quattro, 2.0 TDI 16V, 2.0 TDI 16V quattro, 2.0 TDI quattro, 2.0 TFSI, 2.0 TFSI quattro** 09/04 - 66 -147 kW	**22-139184**	**19-127439**	with sports suspension; without electronic suspension control; mark: G02 VA: Øa: 50 mm
B4	**1.2 TSI, 1.4 TFSI, 1.6, 1.6 FSI, 1.6 TDI, 1.8 T, 1.8 TFSI, 1.8 TFSI quattro, 1.9 TDI, 2.0, 2.0 FSI, 2.0 TDI, 2.0 TDI quattro, 2.0 TDI 16V, 2.0 TDI 16V quattro, 2.0 TDI quattro, 2.0 TFSI, 2.0 TFSI quattro, 3.2 V6 quattro** 07/03 - 66 -184 kW	**22-139191**	**19-127439**	with sports suspension; without electronic suspension control; mark: G07, G08 VA: Øa: 55 mm
B6 Sport	**1.2 TSI, 1.4 TFSI, 1.6, 1.6 FSI, 1.6 TDI, 1.8 T, 1.8 TFSI, 1.8 TFSI quattro, 1.9 TDI, 2.0, 2.0 FSI, 2.0 TDI, 2.0 TDI quattro, 2.0 TDI 16V, 2.0 TDI 16V quattro, 2.0 TDI quattro, 2.0 TFSI, 2.0 TFSI quattro** 09/04 - 66 -147 kW	**35-113751**	**24-172936**	with standard chassis; without electronic suspension control; mark: G02 VA: Øa: 50 mm
B6 Sport	**1.2 TSI, 1.4 TFSI, 1.6, 1.6 FSI, 1.6 TDI, 1.8 T, 1.8 TFSI, 1.8 TFSI quattro, 1.9 TDI, 2.0, 2.0 FSI, 2.0 TDI, 2.0 TDI quattro, 2.0 TDI 16V, 2.0 TDI 16V quattro, 2.0 TDI quattro, 2.0 TFSI, 2.0 TFSI quattro, 3.2 V6 quattro** 07/03 - 66 -184 kW	**35-108177**	**24-172936**	with standard chassis; without electronic suspension control; mark: G07 , G08 VA: Øa: 55 mm
B8	**1.2 TSI, 1.4 TFSI, 1.6, 1.6 FSI, 1.6 TDI, 1.8 T, 1.8 TFSI, 1.8 TFSI quattro, 1.9 TDI, 2.0, 2.0 FSI, 2.0 TDI, 2.0 TDI quattro, 2.0 TDI 16V, 2.0 TDI 16V quattro, 2.0 TDI quattro, 2.0 TFSI, 2.0 TFSI quattro** 09/04 - 66 -147 kW	**35-113768**	**24-178006**	with standard chassis; with sports suspension; without electronic suspension control; mark: G02 VA: Øa: 50 mm
B8	**1.2 TSI, 1.4 TFSI, 1.6, 1.6 FSI, 1.6 TDI, 1.8 T, 1.8 TFSI, 1.8 TFSI quattro, 1.9 TDI, 2.0, 2.0 FSI, 2.0 TDI, 2.0 TDI quattro, 2.0 TDI 16V, 2.0 TDI 16V quattro, 2.0 TDI quattro, 2.0 TFSI, 2.0 TFSI quattro, 3.2 V6 quattro** 07/03 - 66 -184 kW	**35-108191**	**24-178006**	with sports suspension; without electronic suspension control; mark: G07, G08 VA: Øa: 55 mm
B12 PK	**1.2 TSI, 1.4 TFSI, 1.6 TDI, 1.8 T, 1.8 TFSI, 1.9 TDI, 2.0, 2.0 FSI, 2.0 TFSI** 09/04 - 66 -147 kW	**46-183095**		outside diameter strut 50 mm; without electronic suspension control; mark: G02; Conditions see certificates VA: lowering (expertise): 30 mm; axle load to: 1065 kg HA: lowering (expertise): 30 mm; axle load to: 1005 kg
B12 PK	**1.2 TSI, 1.4 TFSI, 1.6 TDI, 1.8 T, 1.8 TFSI, 1.9 TDI, 2.0, 2.0 FSI, 2.0 TFSI** 09/04 - 66 -147 kW	**46-194541**		outside diameter strut 55 mm; without electronic suspension control; mark: G07,G08; Conditions see certificates VA: lowering (expertise): 30 mm; axle load to: 1065 kg HA: lowering (expertise): 30 mm; axle load to: 1005 kg
B12 PK	**1.6, 1.6 FSI** 05/03 - 75 -85 kW	**46-183088**		disconect DCC; outside diameter strut 50 mm; without electronic suspension control; mark: G02; Conditions see certificates; manual transmission VA: lowering (expertise): 30 mm; axle load to: 980 kg HA: lowering (expertise): 30 mm; axle load to: 1005 kg

AUDI			
AUDI A3 (8P1)			
B12 PK	**1.6, 1.6 FSI** 05/03 - 75 -85 kW	**46-183095**	disconect DCC; outside diameter strut 50 mm; without electronic suspension control; mark: G02; Conditions see certificates; automatic transmission VA: lowering (expertise): 30 mm; axle load to: 1065 kg HA: lowering (expertise): 30 mm; axle load to: 1005 kg
B12 PK	**1.6, 1.6 FSI** 05/03 - 75 -85 kW	**46-194534**	disconect DCC; outside diameter strut 55 mm; without electronic suspension control; mark: G07, G08; Conditions see certificates; manual transmission VA: lowering (expertise): 30 mm; axle load to: 980 kg HA: lowering (expertise): 30 mm; axle load to: 1005 kg
B12 PK	**1.6, 1.6 FSI** 05/03 - 75 -85 kW	**46-194541**	disconect DCC; outside diameter strut 55 mm; without electronic suspension control; mark: G07,G08; Conditions see certificates; automatic transmission VA: lowering (expertise): 30 mm; axle load to: 1065 kg HA: lowering (expertise): 30 mm; axle load to: 1005 kg
B12 PK	**1.8 TFSI quattro, 2.0 TDI quattro, 2.0 TDI 16V quattro, 2.0 TDI quattro, 2.0 TFSI quattro** 09/04 - 100 -147 kW	**46-183125**	outside diameter strut 50 mm; without electronic suspension control; mark: G02; Conditions see certificates VA: lowering (expertise): 30 mm; axle load to: 1155 kg HA: lowering (expertise): 30 mm; axle load to: 1125 kg
B12 PK	**1.8 TFSI quattro, 2.0 TDI quattro, 2.0 TDI 16V quattro, 2.0 TDI quattro, 2.0 TFSI quattro** 09/04 - 100 -147 kW	**46-194565**	outside diameter strut 55 mm; without electronic suspension control; mark: G07, G08; Conditions see certificates VA: lowering (expertise): 30 mm; axle load to: 1155 kg HA: lowering (expertise): 30 mm; axle load to: 1125 kg
B12 PK	**3.2 V6 quattro** 07/03 - 184 kW	**46-183118**	outside diameter strut 55 mm; without electronic suspension control; mark: G07, G08; Conditions see certificates VA: lowering (expertise): 30 mm; axle load to: 1155 kg HA: lowering (expertise): 30 mm; axle load to: 1125 kg
B12 PK	**1.6 TDI, 1.8 T, 1.8 TFSI, 1.9 TDI, 2.0, 2.0 FSI, 2.0 TDI, 2.0 TFSI** 09/04 - 66 -147 kW	**46-183101**	outside diameter strut 50 mm; without electronic suspension control; mark: G02; Conditions see certificates VA: lowering (expertise): 30 mm; axle load to: 1155 kg HA: lowering (expertise): 30 mm; axle load to: 1005 kg
B12 PK	**1.6 TDI, 1.8 T, 1.8 TFSI, 1.9 TDI, 2.0, 2.0 FSI, 2.0 TDI, 2.0 TFSI** 09/04 - 66 -147 kW	**46-194558**	outside diameter strut 55 mm; without electronic suspension control; mark: G07, G08; Conditions see certificates VA: lowering (expertise): 30 mm; axle load to: 1155 kg HA: lowering (expertise): 30 mm; axle load to: 1005 kg
B12 SL	**1.2 TSI, 1.4 TFSI, 1.6, 1.6 FSI, 1.6 TDI, 1.9 TDI, 2.0, 2.0 FSI** 05/03 - 66 -120 kW	**46-183408**	disconect DCC; outside diameter strut 50 mm; without electronic suspension control; mark: G02; Conditions see certificates VA: lowering (expertise): 45-50 mm; axle load to: 1040 kg HA: lowering (expertise): 35-40 mm; axle load to: 1010 kg
B12 SL	**1.2 TSI, 1.4 TFSI, 1.6, 1.6 FSI, 1.9 TDI, 2.0, 2.0 FSI** 05/03 - 75 -120 kW	**46-194657**	disconect DCC; outside diameter strut 55 mm; without electronic suspension control; mark: G07, G08; Conditions see certificates VA: lowering (expertise): 45-50 mm; axle load to: 1040 kg HA: lowering (expertise): 35-40 mm; axle load to: 1010 kg
B12 SL	**1.8 T, 1.8 TFSI, 1.9 TDI, 2.0, 2.0 FSI, 2.0 TDI, 2.0 TDI 16V, 2.0 TFSI** 09/04 - 77 -147 kW	**46-194664**	outside diameter strut 55 mm; without electronic suspension control; mark: G07, G08; Conditions see certificates VA: lowering (expertise): 45-50 mm; axle load to: 1130 kg HA: lowering (expertise): 35-40 mm; axle load to: 1010 kg
B12 SL	**1.6 TDI, 1.8 T, 1.8 TFSI, 1.9 TDI, 2.0, 2.0 FSI, 2.0 TDI, 2.0 TDI 16V, 2.0 TFSI** 09/04 - 66 -147 kW	**46-183422**	outside diameter strut 50 mm; without electronic suspension control; mark: G02; Conditions see certificates VA: lowering (expertise): 45-50 mm; axle load to: 1130 kg HA: lowering (expertise): 35-40 mm; axle load to: 1010 kg
B14	**1.2 TSI, 1.4 TFSI, 1.6, 1.6 FSI, 1.6 TDI, 1.8 T, 1.8 TFSI, 1.8 TFSI quattro, 1.9 TDI, 2.0, 2.0 FSI, 2.0 TDI, 2.0 TDI quattro, 2.0 TDI 16V, 2.0 TDI 16V quattro, 2.0 TDI quattro, 2.0 TFSI, 2.0 TFSI quattro** 09/04 - 66 -147 kW	**47-128347**	disconect DCC; outside diameter strut 50 mm; without electronic suspension control; Conditions see certificates VA: mark: G02; lowering (expertise): 30-50 mm; axle load to: 1200 kg HA: lowering (expertise): 30-50 mm; axle load to: 1100 kg
B14	**1.2 TSI, 1.4 TFSI, 1.6, 1.6 FSI, 1.6 TDI, 1.8 T, 1.8 TFSI, 1.8 TFSI quattro, 1.9 TDI, 2.0, 2.0 FSI, 2.0 TDI, 2.0 TDI quattro, 2.0 TDI 16V, 2.0 TDI 16V quattro, 2.0 TDI quattro, 2.0 TFSI, 2.0 TFSI quattro, 3.2 V6 quattro** 07/03 - 66 -184 kW	**47-127708**	disconect DCC; outside diameter strut 55 mm; without electronic suspension control; mark: G07, G08; Conditions see certificates VA: lowering (expertise): 30-50 mm; axle load to: 1200 kg HA: lowering (expertise): 30-50 mm; axle load to: 1100 kg

AUDI

AUDI A3 (8P1)

B14	**S3 quattro** 11/06 - 188 -195 kW	**47-127708**		outside diameter strut 55 mm; without electronic suspension control; Conditions see certificates VA: lowering (expertise): 20-30 mm; axle load to: 1210 kg HA: lowering (expertise): 10-30 mm; axle load to: 1100 kg
B16 PSS10	**1.2 TSI, 1.4 TFSI, 1.6, 1.6 FSI, 1.6 TDI, 1.8 T, 1.8 TFSI, 1.8 TFSI quattro, 1.9 TDI, 2.0, 2.0 FSI, 2.0 TDI, 2.0 TDI quattro, 2.0 TDI 16V, 2.0 TDI 16V quattro, 2.0 TDI quattro, 2.0 TFSI, 2.0 TFSI quattro** 09/04 - 66 -147 kW	**48-135238**		disconect DCC; outside diameter strut 50 mm; without electronic suspension control; Conditions see certificates VA: mark: G02; lowering (expertise): 30-50 mm; axle load to: 1210 kg; Øa: 50 mm HA: lowering (expertise): 30-50 mm; axle load to: 1100 kg
B16 PSS10	**1.2 TSI, 1.4 TFSI, 1.6, 1.6 FSI, 1.6 TDI, 1.8 T, 1.8 TFSI, 1.8 TFSI quattro, 1.9 TDI, 2.0, 2.0 FSI, 2.0 TDI, 2.0 TDI quattro, 2.0 TDI 16V, 2.0 TDI 16V quattro, 2.0 TDI quattro, 2.0 TFSI, 2.0 TFSI quattro, 3.2 V6 quattro** 07/03 - 66 -184 kW	**48-135245**		disconect DCC; outside diameter strut 55 mm; without electronic suspension control; Conditions see certificates VA: mark: G07,G08; lowering (expertise): 30-50 mm; axle load to: 1210 kg; Øa: 55 mm HA: lowering (expertise): 30-50 mm; axle load to: 1100 kg
B16 PSS10	**S3 quattro** 11/06 - 188 -195 kW	**48-135245**		outside diameter strut 55 mm; without electronic suspension control; Conditions see certificates VA: lowering (expertise): 20-30 mm; axle load to: 1210 kg HA: lowering (expertise): 10-30 mm; axle load to: 1100 kg
B16 RC	**1.2 TSI, 1.4 TFSI, 1.6, 1.6 FSI, 1.6 TDI, 1.8 T, 1.8 TFSI, 1.8 TFSI quattro, 1.9 TDI, 2.0, 2.0 FSI, 2.0 TDI, 2.0 TDI quattro, 2.0 TDI 16V, 2.0 TDI 16V quattro, 2.0 TDI quattro, 2.0 TFSI, 2.0 TFSI quattro, 3.2 V6 quattro** 07/03 - 66 -184 kW	**49-196849**		Øa: 55 mm; disconect DCC; without electronic suspension control; mark: G07, G08, G09, G11; Conditions see certificates VA: lowering (expertise): 20-40 mm; axle load to: 1140 kg HA: lowering (expertise): 20-40 mm; axle load to: 1040 kg
B16 RC	**S3 quattro** 02/07 - 188 kW	**49-196849**		Øa: 55 mm; disconect DCC; without electronic suspension control; mark: G07, G08, G09, G11; Conditions see certificates VA: lowering (expertise): 10-20 mm; axle load to: 1140 kg HA: lowering (expertise): 10-30 mm; axle load to: 1040 kg
B16 RC	**S3 quattro** 11/06 - 195 kW	**49-196849**		Øa: 55 mm; disconect DCC; without electronic suspension control; mark: G07, G08, G09, G11; Conditions see certificates VA: lowering (expertise): 20-30 mm; axle load to: 1140 kg HA: lowering (expertise): 10-30 mm; axle load to: 1040 kg
B16 BCS	**2.0 TDI, 2.0 TDI quattro, 2.0 TFSI, 2.0 TFSI quattro, 3.2 V6 quattro, S3 quattro** 07/03 - 125 -195 kW	**48-215909**		outside diameter strut 55 mm; Conditions see certificates VA: lowering (expertise): 10-20 mm; axle load to: 1210 kg HA: lowering (expertise): 10-30 mm; axle load to: 1110 kg

AUDI A3 Sportback (8PA)

B1	**1.2 TSI, 1.4 TFSI, 1.6, 1.6 FSI, 1.6 TDI, 1.8 TFSI, 1.8 TFSI quattro, 1.9 TDI, 2.0, 2.0 FSI, 2.0 TDI, 2.0 TDI quattro, 2.0 TDI 16V, 2.0 TDI 16V quattro, 2.0 TDI quattro, 2.0 TFSI, 2.0 TFSI quattro** 09/04 - 66 -147 kW	**12-224074**	**12-226535**	VA: with ball bearing HA: for PR number: AU6/UA7
B3	**1.4 TFSI, 1.8 TFSI** 11/06 - 92 -118 kW	**37-133030**	**36-147779**	with standard chassis
B3	**1.4 TFSI, 1.8 TFSI** 11/06 - 92 -118 kW	**37-147747**	**36-147786**	with standard chassis; Heavy Duty Version .
B3	**1.6, 1.6 FSI** 09/04 - 75 -85 kW	**37-133030**	**36-147779**	with standard chassis
B3	**1.6, 1.6 FSI** 09/04 - 75 -85 kW	**37-147747**	**36-147786**	with standard chassis; Heavy Duty Version .

AUDI				
AUDI A3 Sportback (8PA)				
B3	**1.8 TFSI quattro, 2.0 TDI 16V** 09/04 - 103 -118 kW	**37-147754**		with standard chassis; Heavy Duty Version .
B3	**1.8 TFSI quattro, 2.0 TDI 16V** 09/04 - 103 -118 kW	**37-147730**	**36-147793**	with standard chassis
B3	**2.0 FSI** 09/04 - 110 kW	**37-147747**	**36-147779**	with standard chassis
B3	**2.0 TFSI** 09/04 - 147 kW	**37-147747**	**36-147793**	with standard chassis
B3	**2.0 TFSI** 09/04 - 147 kW	**37-147730**		with standard chassis; Heavy Duty Version .
B3	**2.0 TFSI quattro** 09/04 - 147 kW	**37-147730**	**36-147793**	with standard chassis
B3	**1.6 TDI** 05/09 - 66 -77 kW	**37-147747**	**36-147779**	with standard chassis
B3	**1.6 TDI** 05/09 - 66 -77 kW	**37-147730**	**36-147786**	with standard chassis; Heavy Duty Version .
B3	**1.9 TDI** 09/04 - 77 kW	**37-147747**	**36-147779**	with standard chassis
B3	**1.9 TDI, 2.0 FSI** 09/04 - 77 -110 kW	**37-147730**	**36-147786**	with standard chassis; Heavy Duty Version .
B3	**2.0 TDI** 09/04 - 100 -125 kW	**37-147730**	**36-147793**	with standard chassis
B3	**2.0 TDI, 2.0 TFSI quattro** 09/04 - 100 -147 kW	**37-147754**		with standard chassis; Heavy Duty Version .
B3	**2.0 TDI quattro, 2.0 TDI 16V quattro, 2.0 TDI quattro** 11/05 - 103 -125 kW	**37-147754**	**36-147793**	with standard chassis
B4	**1.2 TSI, 1.4 TFSI, 1.6, 1.6 FSI, 1.6 TDI, 1.8 TFSI, 1.8 TFSI quattro, 1.9 TDI, 2.0, 2.0 FSI, 2.0 TDI, 2.0 TDI quattro, 2.0 TDI 16V, 2.0 TDI 16V quattro, 2.0 TDI quattro, 2.0 TFSI, 2.0 TFSI quattro** 09/04 - 66 -147 kW	**22-131607**	**19-127439**	with standard chassis; without electronic suspension control; mark: G02 VA: Øa: 50 mm
B4	**1.2 TSI, 1.4 TFSI, 1.6, 1.6 FSI, 1.6 TDI, 1.8 TFSI, 1.8 TFSI quattro, 1.9 TDI, 2.0, 2.0 FSI, 2.0 TDI, 2.0 TDI quattro, 2.0 TDI 16V, 2.0 TDI 16V quattro, 2.0 TDI quattro, 2.0 TFSI, 2.0 TFSI quattro, 3.2 V6 quattro** 09/04 - 66 -184 kW	**22-131614**	**19-127439**	with standard chassis; without electronic suspension control; mark: G07, G08 VA: Øa: 55 mm
B4	**1.2 TSI, 1.4 TFSI, 1.6, 1.6 FSI, 1.6 TDI, 1.8 TFSI, 1.8 TFSI quattro, 1.9 TDI, 2.0, 2.0 FSI, 2.0 TDI, 2.0 TDI quattro, 2.0 TDI 16V, 2.0 TDI 16V quattro, 2.0 TDI quattro, 2.0 TFSI, 2.0 TFSI quattro** 09/04 - 66 -147 kW	**22-139184**	**19-127439**	with sports suspension; without electronic suspension control; mark: G02 VA: Øa: 50 mm
B4	**1.2 TSI, 1.4 TFSI, 1.6, 1.6 FSI, 1.6 TDI, 1.8 TFSI, 1.8 TFSI quattro, 1.9 TDI, 2.0, 2.0 FSI, 2.0 TDI, 2.0 TDI quattro, 2.0 TDI 16V, 2.0 TDI 16V quattro, 2.0 TDI quattro, 2.0 TFSI, 2.0 TFSI quattro, 3.2 V6 quattro** 09/04 - 66 -184 kW	**22-139191**	**19-127439**	with sports suspension; without electronic suspension control; mark: G07, G08 VA: Øa: 55 mm

AUDI

AUDI A3 Sportback (8PA)

B6 Sport	**1.2 TSI, 1.4 TFSI, 1.6, 1.6 FSI, 1.6 TDI, 1.8 TFSI, 1.8 TFSI quattro, 1.9 TDI, 2.0, 2.0 FSI, 2.0 TDI, 2.0 TDI quattro, 2.0 TDI 16V, 2.0 TDI 16V quattro, 2.0 TDI quattro, 2.0 TFSI, 2.0 TFSI quattro, 3.2 V6 quattro** 09/04 - 66 -184 kW	**35-113751**	**24-172936**	with standard chassis; without electronic suspension control VA: Øa: 50 mm
B6 Sport	**1.2 TSI, 1.4 TFSI, 1.6, 1.6 FSI, 1.6 TDI, 1.8 TFSI, 1.8 TFSI quattro, 1.9 TDI, 2.0, 2.0 FSI, 2.0 TDI, 2.0 TDI quattro, 2.0 TDI 16V, 2.0 TDI 16V quattro, 2.0 TDI quattro, 2.0 TFSI, 2.0 TFSI quattro, 3.2 V6 quattro** 09/04 - 66 -184 kW	**35-108177**	**24-172936**	with standard chassis; without electronic suspension control VA: Øa: 55 mm
B8	**1.2 TSI, 1.4 TFSI, 1.6, 1.6 FSI, 1.6 TDI, 1.8 TFSI, 1.8 TFSI quattro, 1.9 TDI, 2.0, 2.0 FSI, 2.0 TDI, 2.0 TDI quattro, 2.0 TDI 16V, 2.0 TDI 16V quattro, 2.0 TDI quattro, 2.0 TFSI, 2.0 TFSI quattro, 3.2 V6 quattro** 09/04 - 66 -184 kW	**35-113768**	**24-178006**	with sports suspension; without electronic suspension control VA: Øa: 50 mm
B8	**1.2 TSI, 1.4 TFSI, 1.6, 1.6 FSI, 1.6 TDI, 1.8 TFSI, 1.8 TFSI quattro, 1.9 TDI, 2.0, 2.0 FSI, 2.0 TDI, 2.0 TDI quattro, 2.0 TDI 16V, 2.0 TDI 16V quattro, 2.0 TDI quattro, 2.0 TFSI, 2.0 TFSI quattro, 3.2 V6 quattro, RS3 quattro, S3 quattro** 06/08 - 66 -250 kW	**35-108191**	**24-178006**	with sports suspension; without electronic suspension control VA: Øa: 55 mm
B12 PK	**1.4 TFSI, 1.6 TDI, 1.8 TFSI, 1.9 TDI, 2.0, 2.0 FSI, 2.0 TFSI** 09/04 - 66 -147 kW	**46-183156**		disconect DCC; outside diameter strut 50 mm; without electronic suspension control; mark: G02; Conditions see certificates VA: lowering (expertise): 30 mm; axle load to: 1065 kg HA: lowering (expertise): 30 mm; axle load to: 1005 kg
B12 PK	**1.4 TFSI, 1.6 TDI, 1.8 TFSI, 1.9 TDI, 2.0, 2.0 FSI, 2.0 TFSI** 09/04 - 66 -147 kW	**46-194589**		disconect DCC; outside diameter strut 55 mm; without electronic suspension control; mark: G07, G08; Conditions see certificates VA: lowering (expertise): 30 mm; axle load to: 1065 kg HA: lowering (expertise): 30 mm; axle load to: 1005 kg
B12 PK	**1.6, 1.6 FSI** 09/04 - 75 -85 kW	**46-183132**		outside diameter strut 50 mm; mark: G02; Conditions see certificates; manual transmission VA: lowering (expertise): 30 mm; axle load to: 980 kg HA: lowering (expertise): 30 mm; axle load to: 1005 kg
B12 PK	**1.6, 1.6 FSI** 09/04 - 75 -85 kW	**46-183156**		outside diameter strut 50 mm; mark: G02; Conditions see certificates; automatic transmission VA: lowering (expertise): 30 mm; axle load to: 1065 kg HA: lowering (expertise): 30 mm; axle load to: 1005 kg
B12 PK	**1.6, 1.6 FSI** 09/04 - 75 -85 kW	**46-194572**		outside diameter strut 55 mm; mark: G07, G08; Conditions see certificates; manual transmission VA: lowering (expertise): 30 mm; axle load to: 980 kg HA: lowering (expertise): 30 mm; axle load to: 1005 kg
B12 PK	**1.6, 1.6 FSI** 09/04 - 75 -85 kW	**46-194589**		outside diameter strut 55 mm; mark: G07, G08; Conditions see certificates; automatic transmission VA: lowering (expertise): 30 mm; axle load to: 1065 kg HA: lowering (expertise): 30 mm; axle load to: 1005 kg
B12 PK	**1.8 TFSI, 2.0 TDI, 2.0 TDI 16V** 09/04 - 100 -125 kW	**46-183163**		outside diameter strut 50 mm; mark: G02; Conditions see certificates VA: lowering (expertise): 30 mm; axle load to: 1155 kg HA: lowering (expertise): 30 mm; axle load to: 1005 kg
B12 PK	**1.8 TFSI, 2.0 TDI, 2.0 TDI 16V** 09/04 - 100 -125 kW	**46-194596**		outside diameter strut 55 mm; mark: G07, G08; Conditions see certificates VA: lowering (expertise): 30 mm; axle load to: 1155 kg HA: lowering (expertise): 30 mm; axle load to: 1005 kg
B12 PK	**1.8 TFSI quattro, 2.0 TDI quattro, 2.0 TDI 16V quattro, 2.0 TDI quattro, 2.0 TFSI quattro** 09/04 - 103 -147 kW	**46-194640**		outside diameter strut 55 mm; without electronic suspension control; mark: G07, G08; Conditions see certificates VA: lowering (expertise): 30 mm; axle load to: 1155 kg HA: lowering (expertise): 30 mm; axle load to: 1125 kg

AUDI			
AUDI A3 Sportback (8PA)			
B12 PK	**1.8 TFSI quattro, 2.0 TDI quattro, 2.0 TDI 16V quattro, 2.0 TDI quattro, 2.0 TFSI quattro** 09/04 - 103 -147 kW	**46-183187**	outside diameter strut 50 mm; without electronic suspension control; mark: G02; Conditions see certificates VA: lowering (expertise): 30 mm; axle load to: 1155 kg HA: lowering (expertise): 30 mm; axle load to: 1125 kg
B12 PK	**3.2 V6 quattro** 09/04 - 184 kW	**46-183170**	outside diameter strut 55 mm; mark: G07, G08; Conditions see certificates VA: lowering (expertise): 30 mm; axle load to: 1155 kg HA: lowering (expertise): 30 mm; axle load to: 1125 kg
B12 PK	**1.6 TDI, 2.0 TFSI** 09/04 - 66 -147 kW	**46-183163**	outside diameter strut 50 mm; mark: G02; Conditions see certificates; automatic transmission VA: lowering (expertise): 30 mm; axle load to: 1155 kg HA: lowering (expertise): 30 mm; axle load to: 1005 kg
B12 PK	**1.6 TDI, 2.0 TFSI** 09/04 - 66 -147 kW	**46-194596**	outside diameter strut 55 mm; mark: G07, G08; Conditions see certificates; automatic transmission VA: lowering (expertise): 30 mm; axle load to: 1155 kg HA: lowering (expertise): 30 mm; axle load to: 1005 kg
B12 SL	**1.4 TFSI, 1.6, 1.6 FSI, 1.6 TDI, 1.9 TDI, 2.0, 2.0 FSI** 09/04 - 66 -120 kW	**46-183439**	disconect DCC; outside diameter strut 50 mm; without electronic suspension control; mark: G02; Conditions see certificates VA: lowering (expertise): 45-50 mm; axle load to: 1040 kg HA: lowering (expertise): 35-40 mm; axle load to: 1005 kg
B12 SL	**1.4 TFSI, 1.6 TDI, 1.8 TFSI, 1.9 TDI, 2.0, 2.0 FSI, 2.0 TDI, 2.0 TDI 16V, 2.0 TFSI** 09/04 - 66 -147 kW	**46-183446**	disconect DCC; outside diameter strut 50 mm; without electronic suspension control; mark: G02; Conditions see certificates VA: lowering (expertise): 45-50 mm; axle load to: 1130 kg HA: lowering (expertise): 35-40 mm; axle load to: 1005 kg
B12 SL	**1.4 TFSI, 1.6, 1.6 FSI, 1.6 TDI, 1.9 TDI, 2.0, 2.0 FSI** 09/04 - 66 -120 kW	**46-194671**	disconect DCC; outside diameter strut 55 mm; without electronic suspension control; mark: G07, G08; Conditions see certificates VA: lowering (expertise): 45-50 mm; axle load to: 1040 kg HA: lowering (expertise): 35-40 mm; axle load to: 1010 kg
B12 SL	**1.4 TFSI, 1.6 TDI, 1.8 TFSI, 1.9 TDI, 2.0, 2.0 FSI, 2.0 TDI, 2.0 TDI 16V, 2.0 TFSI** 09/04 - 66 -147 kW	**46-194688**	disconect DCC; outside diameter strut 55 mm; without electronic suspension control; mark: G07, G08; Conditions see certificates VA: lowering (expertise): 45-50 mm; axle load to: 1130 kg HA: lowering (expertise): 35-40 mm; axle load to: 1010 kg
B14	**1.2 TSI, 1.4 TFSI, 1.6, 1.6 FSI, 1.6 TDI, 1.8 TFSI, 1.8 TFSI quattro, 1.9 TDI, 2.0, 2.0 FSI, 2.0 TDI, 2.0 TDI quattro, 2.0 TDI 16V, 2.0 TDI 16V quattro, 2.0 TDI quattro, 2.0 TFSI, 2.0 TFSI quattro, 3.2 V6 quattro** 09/04 - 66 -184 kW	**47-128347**	disconect DCC; outside diameter strut 50 mm; without electronic suspension control; Conditions see certificates VA: mark: G02; lowering (expertise): 30-50 mm; axle load to: 1210 kg HA: lowering (expertise): 30-50 mm; axle load to: 1100 kg
B14	**1.2 TSI, 1.4 TFSI, 1.6, 1.6 FSI, 1.6 TDI, 1.8 TFSI, 1.8 TFSI quattro, 1.9 TDI, 2.0, 2.0 FSI, 2.0 TDI, 2.0 TDI 16V, 2.0 TDI 16V quattro, 2.0 TDI quattro, 2.0 TFSI, 2.0 TFSI quattro, 3.2 V6 quattro** 09/04 - 66 -184 kW	**47-127708**	disconect DCC; outside diameter strut 55 mm; without electronic suspension control; Conditions see certificates VA: lowering (expertise): 30-50 mm; axle load to: 1210 kg HA: lowering (expertise): 30-50 mm; axle load to: 1100 kg
B14	**RS3 quattro, S3 quattro** 06/08 - 188 -250 kW	**47-127708**	disconect DCC; outside diameter strut 55 mm; without electronic suspension control; Conditions see certificates VA: lowering (expertise): 20-30 mm; axle load to: 1210 kg HA: lowering (expertise): 20-30 mm; axle load to: 1100 kg
B16 PSS10	**1.2 TSI, 1.4 TFSI, 1.6, 1.6 FSI, 1.6 TDI, 1.8 TFSI, 1.8 TFSI quattro, 1.9 TDI, 2.0, 2.0 FSI, 2.0 TDI, 2.0 TDI quattro, 2.0 TDI 16V, 2.0 TDI 16V quattro, 2.0 TDI quattro, 2.0 TFSI, 2.0 TFSI quattro, 3.2 V6 quattro** 09/04 - 66 -184 kW	**48-135238**	disconect DCC; outside diameter strut 50 mm; without electronic suspension control; Conditions see certificates VA: mark: G02; lowering (expertise): 30-50 mm; axle load to: 1210 kg HA: lowering (expertise): 30-50 mm; axle load to: 1100 kg
B16 PSS10	**1.2 TSI, 1.4 TFSI, 1.6, 1.6 FSI, 1.6 TDI, 1.8 TFSI, 1.8 TFSI quattro, 1.9 TDI, 2.0, 2.0 FSI, 2.0 TDI, 2.0 TDI quattro, 2.0 TDI 16V, 2.0 TDI 16V quattro, 2.0 TDI quattro, 2.0 TFSI, 2.0 TFSI quattro, 3.2 V6 quattro** 09/04 - 66 -184 kW	**48-135245**	disconect DCC; outside diameter strut 55 mm; without electronic suspension control; Conditions see certificates VA: mark: G07,G08; lowering (expertise): 30-50 mm; axle load to: 1210 kg HA: lowering (expertise): 30-50 mm; axle load to: 1100 kg

AUDI

AUDI A3 Sportback (8PA)

B16 PSS10	**RS3 quattro, S3 quattro** 06/08 - 188 -250 kW	**48-135245**		disconect DCC; outside diameter strut 55 mm; Conditions see certificates VA: mark: G07,G08; lowering (expertise): 20-30 mm; axle load to: 1210 kg HA: lowering (expertise): 10-30 mm; axle load to: 1100 kg
B16 RC	**1.2 TSI, 1.4 TFSI, 1.6, 1.6 FSI, 1.6 TDI, 1.8 TFSI, 1.8 TFSI quattro, 1.9 TDI, 2.0, 2.0 FSI, 2.0 TDI, 2.0 TDI quattro, 2.0 TDI 16V, 2.0 TDI 16V quattro, 2.0 TDI quattro, 2.0 TFSI, 2.0 TFSI quattro, 3.2 V6 quattro** 09/04 - 66 -184 kW	**49-196849**		Øa: 55 mm; disconect DCC; without electronic suspension control; mark: G07, G08, G09, G11; Conditions see certificates VA: lowering (expertise): 40-50 mm; axle load to: 1140 kg HA: lowering (expertise): 30-50 mm; axle load to: 1040 kg
B16 RC	**RS3 quattro, S3 quattro** 06/08 - 188 -250 kW	**49-196849**		Øa: 55 mm; disconect DCC; without electronic suspension control; mark: G07, G08, G09, G11; Conditions see certificates VA: lowering (expertise): 20-30 mm; axle load to: 1140 kg HA: lowering (expertise): 10-30 mm; axle load to: 1040 kg
B16 BCS	**2.0 TDI, 2.0 TDI quattro, 2.0 TFSI, 2.0 TFSI quattro, 3.2 V6 quattro, RS3 quattro, S3 quattro** 09/04 - 125 -250 kW	**48-215909**		disconect DCC; outside diameter strut 55 mm; Conditions see certificates VA: lowering (expertise): 20-30 mm; axle load to: 1210 kg HA: lowering (expertise): 10-30 mm; axle load to: 1100 kg

AUDI A3 Convertible

B1	**1.2 TSI, 1.6, 1.6 TDI, 1.8 TFSI, 1.9 TDI, 2.0 TDI, 2.0 TFSI** 04/08 - 75 -147 kW	**12-224098**	**12-224081**	VA: with ball bearing HA: without ball bearing
B1	**1.4 TFSI** 02/11 - 92 kW	**12-224074**	**12-224081**	VA: with ball bearing HA: without ball bearing
B4	**1.2 TSI, 1.4 TFSI, 1.6, 1.6 TDI, 1.8 TFSI, 1.9 TDI, 2.0 TDI, 2.0 TFSI** 04/08 - 75 -147 kW	**22-131607**	**19-172996**	with standard chassis; without electronic suspension control; mark: G02 VA: Øa: 50 mm
B4	**1.2 TSI, 1.4 TFSI, 1.6, 1.6 TDI, 1.8 TFSI, 1.9 TDI, 2.0 TDI, 2.0 TFSI** 04/08 - 75 -147 kW	**22-131614**	**19-172996**	with standard chassis; without electronic suspension control; mark: G07, G08 VA: Øa: 55 mm
B6 Sport	**1.2 TSI, 1.4 TFSI, 1.6, 1.6 TDI, 1.8 TFSI, 1.9 TDI, 2.0 TDI, 2.0 TFSI** 04/08 - 75 -147 kW	**35-108177**	**24-172936**	with standard chassis; without electronic suspension control VA: Øa: 55 mm
B8	**1.2 TSI, 1.4 TFSI, 1.6, 1.6 TDI, 1.8 TFSI, 1.9 TDI, 2.0 TDI, 2.0 TFSI** 04/08 - 75 -147 kW	**35-108191**	**24-178006**	with sports suspension; without electronic suspension control; mark: G07, G08 VA: Øa: 55 mm
B12 PK	**1.6 TDI, 1.8 TFSI, 1.9 TDI, 2.0 TDI, 2.0 TFSI** 04/08 - 77 -147 kW	**46-192431**		disconect DCC; outside diameter strut 55 mm; without electronic suspension control; mark: G07, G08; without ride height adjustment; Conditions see certificates VA: lowering (expertise): 25 mm; axle load to: 1155 kg HA: lowering (expertise): 25 mm; axle load to: 985 kg
B14	**1.2 TSI, 1.4 TFSI, 1.6, 1.6 TDI, 1.8 TFSI, 1.9 TDI, 2.0 TDI, 2.0 TFSI** 04/08 - 75 -147 kW	**47-127708**		disconect DCC; outside diameter strut 55 mm; without electronic suspension control; Conditions see certificates VA: lowering (expertise): 40-50 mm; axle load to: 1210 kg HA: lowering (expertise): 30-50 mm; axle load to: 1100 kg
B16 PSS10	**1.2 TSI, 1.4 TFSI, 1.6, 1.6 TDI, 1.8 TFSI, 1.9 TDI, 2.0 TDI, 2.0 TFSI** 04/08 - 75 -147 kW	**48-135245**		disconect DCC; outside diameter strut 55 mm; without electronic suspension control; Conditions see certificates VA: lowering (expertise): 40-50 mm; axle load to: 1210 kg HA: lowering (expertise): 30-50 mm; axle load to: 1100 kg
B16 RC	**1.2 TSI, 1.4 TFSI, 1.6, 1.6 TDI, 1.8 TFSI, 1.9 TDI, 2.0 TDI, 2.0 TFSI** 04/08 - 75 -147 kW	**49-196849**		Øa: 55 mm; disconect DCC; without electronic suspension control; mark: G07, G08, G09, G11; Conditions see certificates VA: lowering (expertise): 40-50 mm; axle load to: 1140 kg HA: lowering (expertise): 30-50 mm; axle load to: 1040 kg

AUDI				
AUDI A4 (8D2, B5)				
B1	**1.6, 1.8, 1.8 quattro, 1.8 T, 1.8 T quattro, 1.9 TDI, 1.9 TDI quattro, 2.4, 2.4 quattro, 2.5 TDI, 2.5 TDI quattro, 2.6, 2.6 quattro, 2.8, 2.8 quattro, S4 quattro** 11/94 - 11/00 55 -195 kW	**12-117642**		VA: Material: Rubber/Metal; without ball bearing
B3	**1.6, 1.8, 1.8 T, 1.9 TDI** 11/94 - 11/00 55 -132 kW	**37-131364**	**36-130726**	with standard chassis
B3	**1.6, 1.8, 1.8 T, 1.9 TDI, 2.4, 2.5 TDI, 2.6, 2.8** 11/94 - 11/00 55 -142 kW	**37-131388**	**36-131358**	with standard chassis; Heavy Duty Version .
B3	**1.8 quattro, 1.8 T quattro, 1.9 TDI quattro** 01/95 - 11/00 81 -132 kW	**37-131364**	**36-130733**	with standard chassis
B3	**1.8 quattro, 1.8 T quattro, 1.9 TDI quattro, 2.4 quattro, 2.5 TDI quattro, 2.6 quattro, 2.8 quattro** 01/95 - 11/00 81 -142 kW	**36-195848**	**36-200962**	with standard chassis; Heavy Duty Version .
B3	**2.4, 2.5 TDI, 2.6, 2.8** 01/95 - 11/00 102 -142 kW	**37-131371**	**36-130726**	with standard chassis
B3	**2.4 quattro, 2.5 TDI quattro, 2.6 quattro, 2.8 quattro** 10/96 - 11/00 110 -142 kW	**37-131371**	**36-130733**	with standard chassis
B4	**1.6, 1.8, 1.8 T, 1.9 TDI, 2.4, 2.5 TDI, 2.6, 2.8** 11/94 - 01/99 55 -142 kW	**22-031167**	**19-029207** **11-101390** SP	-> CH.Nr.: 8D-X-200000; with standard chassis
B4	**1.6, 1.8, 1.8 T, 1.9 TDI, 2.4, 2.5 TDI, 2.6, 2.8** 11/94 - 01/99 55 -142 kW	**19-045771**	**19-029207** **11-101390** SP	-> CH.Nr.: 8D-X-200000; with sports suspension
B4	**1.6, 1.8, 1.8 T, 1.9 TDI, 2.4, 2.5 TDI, 2.6, 2.8** 02/99 - 06/00 55 -142 kW	**22-031167**	**19-103471** **11-101390** SP	CH.Nr.: 8D-X-200001-> 8D-1-030000; with standard chassis
B4	**1.6, 1.8, 1.8 T, 1.9 TDI, 2.4, 2.5 TDI, 2.6, 2.8** 02/99 - 06/00 55 -142 kW	**19-045771**	**19-103471**	CH.Nr.: 8D-X-200001-> 8D-1-030000; with sports suspension
B4	**1.6, 1.8, 1.8 T, 1.9 TDI, 2.4, 2.5 TDI, 2.6, 2.8** 07/00 - 11/00 55 -142 kW	**19-119922**	**19-103471**	CH.Nr.: 8D-1-030001 ->; with standard chassis
B4	**1.6, 1.8, 1.8 T, 1.9 TDI, 2.4, 2.5 TDI, 2.6, 2.8** 07/00 - 11/00 55 -142 kW	**19-119939**	**19-103471**	CH.Nr.: 8D-1-030001 ->; with sports suspension
B4	**1.8 quattro, 1.8 T quattro, 1.9 TDI quattro, 2.4 quattro, 2.5 TDI quattro, 2.6 quattro, 2.8 quattro** 01/95 - 11/00 81 -142 kW	**22-031167**	**19-184050**	with standard chassis
B4	**1.8 quattro, 1.8 T quattro, 1.9 TDI quattro, 2.4 quattro, 2.5 TDI quattro, 2.6 quattro, 2.8 quattro** 01/95 - 11/00 81 -142 kW	**19-045771**	**19-184050**	with sports suspension
B4	**2.8** 09/95 - 07/97 128 kW	**22-031167**	**19-029207** **11-101390** SP	with standard chassis
B4	**2.8** 09/95 - 07/97 128 kW	**19-045771**	**19-029207** **11-101390** SP	with sports suspension
B6 Sport	**1.6, 1.8, 1.8 T, 1.9 TDI, 2.4, 2.5 TDI, 2.6, 2.8** 11/94 - 01/99 55 -142 kW	**24-020794**	**24-020800** **11-101390** SP	-> CH.Nr.: 8D-X-200000 VA: serie production spring seat must be used

AUDI

AUDI A4 (8D2, B5)

B6 Sport	**1.6, 1.8, 1.8 T, 1.9 TDI, 2.4, 2.5 TDI, 2.6, 2.8** 02/99 - 06/00 55 -142 kW	**24-020794**	**24-062596** **11-101390** SP	CH.Nr.: 8D-X-200001-> 8D1-030000 VA: serie production spring seat must be used
B6 Sport	**1.6, 1.8, 1.8 T, 1.9 TDI, 2.4, 2.5 TDI, 2.6, 2.8** 07/00 - 11/00 55 -142 kW	**24-065122**	**24-062596** **11-101390** SP	CH.Nr.: 8D-1-030001 ->
B6 Sport	**1.8 quattro, 1.8 T quattro, 1.9 TDI quattro, 2.4 quattro, 2.5 TDI quattro, 2.6 quattro, 2.7 Bi Turbo quattro, 2.7 Turbo quattro, 2.8 quattro** 01/95 - 06/00 81 -187 kW	**24-020794**	**24-026215**	-> CH.Nr.: F8D-1-030000 VA: serie production spring seat must be used HA: without ride height adjustment
B6 Sport	**1.8 quattro, 1.8 T quattro, 1.9 TDI quattro, 2.4 quattro, 2.5 TDI quattro, 2.6 quattro, 2.7 Turbo quattro, 2.8 quattro** 07/00 - 11/00 81 -169 kW	**24-065122**	**24-062121**	CH.Nr.: F8D-1-030001 ->; without sport chassis; without ride height adjustment
B6 Sport	**2.4 quattro** 08/97 - 11/00 120 kW	**24-020794**	**24-026215**	VA: serie production spring seat must be used
B8	**1.6, 1.8, 1.8 T, 1.9 TDI, 2.4, 2.5 TDI, 2.6, 2.8** 11/94 - 01/99 55 -142 kW	**24-020817**	**24-020824** **11-101390** SP	-> CH.Nr.: 8D-X-200000 VA: serie production spring seat must be used
B8	**1.6, 1.8, 1.8 T, 1.9 TDI, 2.4, 2.5 TDI, 2.6, 2.8** 02/99 - 06/00 55 -142 kW	**24-020817**	**24-062596** **11-101390** SP	CH.Nr.: 8D-X-200001-> 8D-1-030000 VA: serie production spring seat must be used
B8	**1.6, 1.8, 1.8 T, 1.9 TDI, 2.4, 2.5 TDI, 2.6, 2.8** 07/00 - 11/00 55 -142 kW	**24-065139**	**24-062596** **11-101390** SP	CH.Nr.: 8D-1-030001 ->
B8	**1.8 quattro, 1.8 T quattro, 1.9 TDI quattro, 2.4 quattro, 2.5 TDI quattro, 2.6 quattro, 2.7 Bi Turbo quattro, 2.7 Turbo quattro, 2.8 quattro** 01/95 - 06/00 81 -187 kW	**24-020817**	**24-026222**	-> CH.Nr.: F8D-1-030000 VA: serie production spring seat must be used HA: without ride height adjustment
B8	**1.8 quattro, 1.8 T quattro, 1.9 TDI quattro, 2.4 quattro, 2.5 TDI quattro, 2.6 quattro, 2.7 Turbo quattro, 2.8 quattro** 07/00 - 11/00 81 -169 kW	**24-065139**	**24-062145**	CH.Nr.: F8D-1-030001 ->; without ride height adjustment
B8	**S4 quattro** 09/97 - 11/00 195 kW	**24-062138**	**24-062145**	VA: serie production spring seat must be used
B12 PK	**1.6, 1.8** 11/94 - 01/99 74 -95 kW	**46-183194**		-> CH.Nr.: 8D-X-200000; serie production spring seat must be used; Conditions see certificates VA: lowering (expertise): 30 mm; axle load to: 995 kg HA: lowering (expertise): 30 mm; axle load to: 970 kg
B12 PK	**1.6, 1.8** 02/99 - CH-Nr. 74 -125 kW	**46-189066**		CH.Nr.: 8D-X-200001-> 8D-1-030000; serie production spring seat must be used; Conditions see certificates VA: lowering (expertise): 30 mm; axle load to: 995 kg HA: lowering (expertise): 30 mm; axle load to: 970 kg
B12 PK	**1.6, 1.8** 07/00 - 11/00 75 -125 kW	**46-189073**		CH.Nr.: 8D-1-030001 ->; Conditions see certificates VA: lowering (expertise): 30 mm; axle load to: 995 kg HA: lowering (expertise): 30 mm; axle load to: 970 kg
B12 PK	**1.8, 1.8 T, 1.9 TDI, 2.4, 2.6** 01/95 - 01/99 55 -132 kW	**46-183200**		-> CH.Nr.: 8D-X-200000; serie production spring seat must be used; Conditions see certificates VA: lowering (expertise): 30 mm; axle load to: 1055 kg HA: lowering (expertise): 30 mm; axle load to: 970 kg
B12 PK	**1.8, 1.8 T, 1.9 TDI, 2.4, 2.6** 02/99 - CH-Nr. 55 -132 kW	**46-189080**		CH.Nr.: 8D-X-200001-> 8D-1-30000; serie production spring seat must be used; Conditions see certificates VA: lowering (expertise): 30 mm; axle load to: 1055 kg HA: lowering (expertise): 30 mm; axle load to: 970 kg
B12 PK	**1.8, 1.8 T, 1.9 TDI, 2.4, 2.6** 07/00 - 11/00 55 -132 kW	**46-189097**		CH.Nr.: 8D-1-030001 ->; Conditions see certificates VA: lowering (expertise): 30 mm; axle load to: 1055 kg HA: lowering (expertise): 30 mm; axle load to: 970 kg
B12 PK	**1.8 quattro** 01/95 - 06/00 85 -92 kW	**46-183217**		-> CH.Nr.: 8D-1-030000; Conditions see certificates VA: lowering (expertise): 30 mm; axle load to: 955 kg HA: lowering (expertise): 30 mm; axle load to: 970 kg

AUDI

AUDI A4 (8D2, B5)

B12 PK	**1.8 quattro** CH-Nr. - 07/00 85 -92 kW	**46-189103**	CH.Nr.: 8D-1-030001 ->; Conditions see certificates VA: lowering (expertise): 30 mm; axle load to: 955 kg HA: lowering (expertise): 30 mm; axle load to: 970 kg
B12 PK	**1.8 quattro, 1.8 T quattro, 1.9 TDI quattro, 2.4 quattro, 2.6 quattro** 01/95 - 06/00 81 -132 kW	**46-183224**	-> CH.Nr.: 8D-1-030000; Conditions see certificates VA: lowering (expertise): 30 mm; axle load to: 1055 kg HA: lowering (expertise): 30 mm; axle load to: 1080 kg
B12 PK	**1.8 quattro, 1.8 T quattro, 1.9 TDI quattro, 2.4 quattro, 2.6 quattro** 07/00 - 11/00 81 -132 kW	**46-189110**	CH.Nr.: 8D-1-030001 ->; Conditions see certificates VA: lowering (expertise): 30 mm; axle load to: 1055 kg HA: lowering (expertise): 30 mm; axle load to: 1080 kg
B12 PK	**1.8 T** 01/95 - 01/99 110 -132 kW	**46-183194**	-> CH.Nr.: 8D-X-200000; serie production spring seat must be used; without AC; Conditions see certificates; manual transmission VA: lowering (expertise): 30 mm; axle load to: 995 kg HA: lowering (expertise): 30 mm; axle load to: 970 kg
B12 PK	**1.8 T** 02/99 - CH-Nr. 110 -132 kW	**46-189066**	CH.Nr.: 8D-X-200001-> 200006; serie production spring seat must be used; without AC; Conditions see certificates; manual transmission VA: lowering (expertise): 30 mm; axle load to: 995 kg HA: lowering (expertise): 30 mm; axle load to: 970 kg
B12 PK	**1.8 T quattro** 01/95 - 06/00 110 -132 kW	**46-183217**	-> CH.Nr.: 8D-1-030000; without AC; Conditions see certificates; manual transmission VA: lowering (expertise): 30 mm; axle load to: 955 kg HA: lowering (expertise): 30 mm; axle load to: 970 kg
B12 PK	**1.8 T quattro** CH-Nr. - 07/00 110 -132 kW	**46-189103**	CH.Nr.: 8D-1-030001 ->; without AC; Conditions see certificates; manual transmission VA: lowering (expertise): 30 mm; axle load to: 955 kg HA: lowering (expertise): 30 mm; axle load to: 970 kg
B12 PK	**1.8 T** 07/00 - 11/00 132 kW	**46-189073**	CH.Nr.: 8D-1-030001 ->; without AC; Conditions see certificates; manual transmission VA: lowering (expertise): 30 mm; axle load to: 995 kg HA: lowering (expertise): 30 mm; axle load to: 970 kg
B12 PK	**2.4, 2.6, 2.8** 01/95 - 01/99 102 -142 kW	**46-183279**	-> CH.Nr.: 8D-X-200000; Conditions see certificates; automatic transmission VA: lowering (expertise): 30 mm; axle load to: 1150 kg HA: lowering (expertise): 30 mm; axle load to: 970 kg
B12 PK	**2.4, 2.6, 2.8** 02/99 - 06/00 110 -142 kW	**46-189189**	CH.Nr.: 8D-X-200001-> 8D-1-030000; Conditions see certificates VA: lowering (expertise): 30 mm; axle load to: 1150 kg HA: lowering (expertise): 30 mm; axle load to: 970 kg
B12 PK	**2.4, 2.6, 2.8** 07/00 - 11/00 110 -142 kW	**46-189196**	CH.Nr.: 8D-1-030001 ->; Conditions see certificates VA: lowering (expertise): 30 mm; axle load to: 1150 kg HA: lowering (expertise): 30 mm; axle load to: 970 kg
B12 PK	**2.4 quattro, 2.6 quattro, 2.8 quattro** 10/96 - 06/00 110 -142 kW	**46-183286**	-> CH.Nr.: 8D-1-030000; serie production spring seat must be used; Conditions see certificates VA: lowering (expertise): 30 mm; axle load to: 1150 kg HA: lowering (expertise): 30 mm; axle load to: 1080 kg
B12 PK	**2.4 quattro, 2.6 quattro, 2.8 quattro** CH-Nr. - 11/00 110 -142 kW	**46-189202**	CH.Nr.: 8D-1-030001 ->; CH.Nr.: 200007 ->; Conditions see certificates VA: lowering (expertise): 30 mm; axle load to: 1150 kg HA: lowering (expertise): 30 mm; axle load to: 1080 kg
B12 PK	**2.8** 09/95 - 01/99 128 -142 kW	**46-183200**	-> CH.Nr.: 8D-X-200000; serie production spring seat must be used; Conditions see certificates; manual transmission VA: lowering (expertise): 30 mm; axle load to: 1055 kg HA: lowering (expertise): 30 mm; axle load to: 970 kg
B12 PK	**2.8 quattro** 01/95 - 06/00 128 -142 kW	**46-183224**	-> CH.Nr.: 8D-1-030000; Conditions see certificates; manual transmission VA: lowering (expertise): 30 mm; axle load to: 1055 kg HA: lowering (expertise): 30 mm; axle load to: 1080 kg
B12 PK	**2.8** 02/99 - CH-Nr. 142 kW	**46-189080**	CH.Nr.: 8D-X-200001-> 8D-1-30000; serie production spring seat must be used; Conditions see certificates; manual transmission VA: lowering (expertise): 30 mm; axle load to: 1055 kg HA: lowering (expertise): 30 mm; axle load to: 970 kg
B12 PK	**2.8** 07/00 - 11/00 142 kW	**46-189097**	CH.Nr.: 8D-1-030001 ->; Conditions see certificates; manual transmission VA: lowering (expertise): 30 mm; axle load to: 1055 kg HA: lowering (expertise): 30 mm; axle load to: 970 kg
B12 PK	**2.8 quattro** 07/00 - 11/00 142 kW	**46-189110**	CH.Nr.: 8D-1-030001 ->; Conditions see certificates; manual transmission VA: lowering (expertise): 30 mm; axle load to: 1055 kg HA: lowering (expertise): 30 mm; axle load to: 1080 kg

AUDI				
AUDI A4 (8D2, B5)				
B12 PK	**2.5 TDI** 09/97 - 01/99 110 kW	**46-183279**		-> CH.Nr.: 8D-X-200000; Conditions see certificates; manual transmission VA: lowering (expertise): 30 mm; axle load to: 1150 kg HA: lowering (expertise): 30 mm; axle load to: 970 kg
B12 PK	**2.5 TDI** 02/99 - 06/00 110 kW	**46-189189**		CH.Nr.: 8D-X-200001-> 8D-1-030000; Conditions see certificates; manual transmission VA: lowering (expertise): 30 mm; axle load to: 1150 kg HA: lowering (expertise): 30 mm; axle load to: 970 kg
B12 PK	**2.5 TDI** 07/00 - 11/00 110 kW	**46-189196**		CH.Nr.: 8D-1-030001 ->; Conditions see certificates; manual transmission VA: lowering (expertise): 30 mm; axle load to: 1150 kg HA: lowering (expertise): 30 mm; axle load to: 970 kg
B12 PK	**2.5 TDI quattro** 09/97 - 06/00 110 kW	**46-183286**		-> CH.Nr.: 8D-1-030000; serie production spring seat must be used; Conditions see certificates; manual transmission VA: lowering (expertise): 30 mm; axle load to: 1150 kg HA: lowering (expertise): 30 mm; axle load to: 1080 kg
B12 PK	**2.5 TDI quattro** CH-Nr. - 11/00 110 kW	**46-189202**		CH.Nr.: 8D-1-030001 ->; CH.Nr.: 200007 ->; Conditions see certificates; manual transmission VA: lowering (expertise): 30 mm; axle load to: 1150 kg HA: lowering (expertise): 30 mm; axle load to: 1080 kg
B12 SL	**1.6, 1.8, 1.8 T, 1.9 TDI, 2.4** 11/94 - 01/99 55 -132 kW	**46-183361**		-> CH.Nr.: 8D-X-200000; serie production spring seat must be used; Conditions see certificates VA: lowering (expertise): 45-50 mm; axle load to: 1070 kg HA: lowering (expertise): 35-40 mm; axle load to: 1010 kg
B12 SL	**1.6, 1.8, 1.8 T, 1.9 TDI, 2.4, 2.6** 02/99 - CH-Nr. 55 -132 kW	**46-189257**		CH.Nr.: 8D-X-200001-> 8D-1-030000; serie production spring seat must be used; Conditions see certificates VA: lowering (expertise): 45-50 mm; axle load to: 1070 kg HA: lowering (expertise): 35-40 mm; axle load to: 1010 kg
B12 SL	**1.6, 1.8, 1.8 T, 1.9 TDI, 2.4, 2.6** 07/00 - 11/00 55 -132 kW	**46-189264**		CH.Nr.: 8D-1-030001 ->; Conditions see certificates VA: lowering (expertise): 45-50 mm; axle load to: 1070 kg HA: lowering (expertise): 35-40 mm; axle load to: 1010 kg
B12 SL	**2.8** 09/95 - 01/99 128 -142 kW	**46-183361**		-> CH.Nr.: 8D-X-200000; serie production spring seat must be used; Conditions see certificates; manual transmission VA: lowering (expertise): 45-50 mm; axle load to: 1070 kg HA: lowering (expertise): 35-40 mm; axle load to: 1010 kg
B12 SL	**2.8** 02/99 - CH-Nr. 142 kW	**46-189257**		CH.Nr.: 8D-X-200001-> 8D-1-30000; serie production spring seat must be used; Conditions see certificates; manual transmission VA: lowering (expertise): 45-50 mm; axle load to: 1070 kg HA: lowering (expertise): 35-40 mm; axle load to: 1010 kg
B12 SL	**2.8** 07/00 - 11/00 142 kW	**46-189264**		CH.Nr.: 8D-1-030001 ->; Conditions see certificates; manual transmission VA: lowering (expertise): 45-50 mm; axle load to: 1070 kg HA: lowering (expertise): 35-40 mm; axle load to: 1010 kg
B16 PSS9	**1.6, 1.8, 1.8 T, 1.9 TDI, 2.4, 2.5 TDI, 2.6, 2.8** 11/94 - 11/00 55 -142 kW	**48-086059**		Conditions see certificates VA: lowering (expertise): 35-55 mm; axle load to: 1150 kg HA: lowering (expertise): 30-50 mm; axle load to: 1020 kg
B16 PSS9	**1.8 quattro, 1.8 T quattro, 1.9 TDI quattro, 2.4 quattro, 2.5 TDI quattro, 2.6 quattro, 2.7 Bi Turbo quattro, 2.7 Turbo quattro, 2.8 quattro** 01/95 - 11/00 81 -187 kW	**48-086103**		Conditions see certificates VA: lowering (expertise): 30-50 mm; axle load to: 1150 kg HA: without ride height adjustment; lowering (expertise): 30-50 mm; axle load to: 1140 kg
B16 PSS9	**S4 quattro** 09/97 - 11/00 195 kW	**48-086165**		Conditions see certificates VA: lowering (expertise): 15-35 mm; axle load to: 1150 kg HA: lowering (expertise): 10-30 mm; axle load to: 1140 kg
AUDI A4 Avant (8D5, B5)				
B1	**1.6, 1.8, 1.8 quattro, 1.8 T, 1.8 T quattro, 1.9 DUO, 1.9 TDI, 1.9 TDI quattro, 2.4, 2.4 quattro, 2.5 TDI, 2.5 TDI quattro, 2.6, 2.6 quattro, 2.8, 2.8 quattro** 11/94 - 09/01 55 -142 kW	**12-117642**		VA: Material: Rubber/Metal; without ball bearing
B3	**1.6, 1.8, 1.8 T, 1.9 TDI** 11/94 - 09/01 55 -132 kW	**37-131388**	**36-131358**	with standard chassis
B3	**2.4, 2.5 TDI, 2.6, 2.8** 07/95 - 09/01 102 -142 kW	**37-131371**	**36-131358**	with standard chassis

AUDI				
AUDI A4 Avant (8D5, B5)				
B4	**1.6, 1.8** 11/94 - 07/97 74 -92 kW	**22-031167**	**19-105376** **11-103462** SP	with standard chassis
B4	**1.6, 1.8, 1.9 TDI** 11/94 - 07/97 55 -92 kW	**19-045771**	**19-105376** **11-103462** SP	with sports suspension
B4	**1.6, 1.8** 08/97 - 01/99 74 -92 kW	**22-031167**	**19-105376** **11-103462** SP	-> CH.Nr.: 8D-X-200000; with standard chassis
B4	**1.6, 1.8, 1.8 T, 1.9 DUO, 1.9 TDI, 2.4, 2.5 TDI, 2.6, 2.8** 02/99 - 06/00 55 -142 kW	**22-031167**	**19-103471** **11-103462** SP	CH.Nr.: 8D-X-200001-> 8D-1-030000; with standard chassis
B4	**1.6, 1.8, 1.8 T, 1.9 TDI, 2.4, 2.5 TDI, 2.6, 2.8** 07/00 - 09/01 55 -142 kW	**19-119922**	**19-103471**	CH.Nr.: 8D1-030001 ->; with standard chassis
B4	**1.6, 1.8, 1.8 T, 1.9 TDI, 2.4, 2.5 TDI, 2.6, 2.8** 07/00 - 09/01 55 -142 kW	**19-119939**	**19-103471** **11-101390** SP	CH.Nr.: 8D-1-030001 ->; with sports suspension
B4	**1.8 quattro, 1.8 T quattro, 1.9 TDI quattro, 2.4 quattro, 2.5 TDI quattro, 2.6 quattro, 2.8 quattro** 07/95 - 09/01 81 -142 kW	**22-031167**	**19-184050**	with standard chassis
B4	**1.8 quattro, 1.8 T quattro, 1.9 TDI quattro, 2.4 quattro, 2.5 TDI quattro, 2.6 quattro, 2.8 quattro** 07/95 - 09/01 81 -142 kW	**19-045771**	**19-184050**	with sports suspension
B4	**1.8 T, 2.8** 03/96 - 09/01 110 -132 kW	**22-031167**	**19-105376** **11-103462** SP	with standard chassis
B4	**2.4, 2.5 TDI, 2.6, 2.8** 07/95 - 01/99 102 -142 kW	**22-031167**	**19-105376** **11-103462** SP	-> CH.Nr.: 8DX-200000; with standard chassis
B4	**1.9 TDI** 02/96 - 07/97 55 -81 kW	**19-045771**	**19-105376** **11-103462** SP	with standard chassis; manual transmission
B4	**1.9 TDI** 02/96 - 07/97 55 -81 kW	**22-031167**	**19-105376** **11-103462** SP	with standard chassis; automatic transmission
B4	**1.9 TDI** 02/96 - 07/97 66 -81 kW	**19-045771**	**19-105376** **11-103462** SP	with sports suspension
B4	**1.9 DUO, 1.9 TDI** 08/97 - 01/99 55 -81 kW	**22-031167**	**19-105376** **11-103462** SP	with standard chassis
B6 Sport	**1.6, 1.8, 1.8 T, 1.9 TDI, 2.4, 2.5 TDI, 2.6, 2.8** 01/96 - 01/99 55 -142 kW	**24-020794**	**24-020800** **11-103462** SP	-> CH.Nr.: 8DX-200000 VA: serie production spring seat must be used
B6 Sport	**1.6, 1.8, 1.8 T, 1.9 TDI, 2.4, 2.5 TDI, 2.6, 2.8** 02/99 - 06/00 55 -142 kW	**24-020794**	**24-062596** **11-103462** SP	CH.Nr.: 8DX-200001-> 8D1-030000 VA: serie production spring seat must be used
B6 Sport	**1.6, 1.8, 1.8 T, 1.9 TDI, 2.4, 2.5 TDI, 2.6, 2.8** 07/00 - 09/01 55 -142 kW	**24-065122**	**24-062596** **11-103462** SP	CH.Nr.: 8D1-030001 ->
B6 Sport	**1.8 quattro, 1.8 T quattro, 1.9 TDI quattro, 2.5 TDI quattro, 2.6 quattro, 2.8 quattro** 03/98 - 06/00 81 -142 kW	**24-062114**	**24-062121**	CH.Nr.: 8D-W-006471-> 8D-1-030000; without ride height adjustment VA: serie production spring seat must be used
B6 Sport	**1.8 quattro, 1.8 T quattro, 1.9 TDI quattro, 2.4 quattro, 2.5 TDI quattro, 2.6 quattro, 2.8 quattro** 07/00 - 09/01 81 -142 kW	**24-065122**	**24-062121**	CH.Nr.: F8D-1-030001 ->; without sport chassis; without ride height adjustment
B6 Sport	**S4 quattro** 09/97 - 09/01 195 kW	**24-062114**	**24-062121**	VA: serie production spring seat must be used

AUDI

AUDI A4 Avant (8D5, B5)

B8	**1.6, 1.8, 1.8 T, 1.9 TDI, 2.4, 2.5 TDI, 2.6, 2.8** 01/96 - 01/99 55 -142 kW	**24-020817** HA	**24-020824** VA **11-103462** SP	-> CH.Nr.: 8DX-200000 VA: serie production spring seat must be used
B8	**1.6, 1.8, 1.8 T, 1.9 TDI, 2.4, 2.5 TDI, 2.6, 2.8** 02/99 - 06/00 55 -142 kW	**24-020817** HA	**24-062596** VA **11-103462** SP	CH.Nr.: 8DX-200001-> 8D1-030000 VA: serie production spring seat must be used
B8	**1.6, 1.8, 1.8 T, 1.9 TDI, 2.4, 2.5 TDI, 2.6, 2.8** 07/00 - 09/01 55 -142 kW	**24-065139** HA	**24-062596** VA **11-103462** SP	CH.Nr.: 8D1-030001 ->
B8	**1.8 quattro, 1.8 T quattro, 1.9 TDI quattro, 2.4 quattro, 2.5 TDI quattro, 2.6 quattro, 2.8 quattro** 03/98 - 06/00 81 -142 kW	**24-062138** HA	**24-062145** VA	CH.Nr.: 8D-W-006471-> F8D-1-030000; without ride height adjustment VA: serie production spring seat must be used
B8	**1.8 quattro, 1.8 T quattro, 1.9 TDI quattro, 2.4 quattro, 2.5 TDI quattro, 2.6 quattro, 2.8 quattro** 07/00 - 09/01 81 -142 kW	**24-065139** HA	**24-062145** VA	CH.Nr.: F8D-1-030001 ->; without ride height adjustment
B8	**S4 quattro** 09/97 - 09/01 195 kW	**24-062138** HA	**24-062145** VA	VA: serie production spring seat must be used

B12 PK	**1.6, 1.8** 01/96 - 01/99 74 -92 kW	**46-183231**	-> CH.Nr.: 8D-X-200000; serie production spring seat must be used; Conditions see certificates VA: lowering (expertise): 30 mm; axle load to: 995 kg HA: lowering (expertise): 30 mm; axle load to: 1045 kg
B12 PK	**1.6, 1.8** 02/99 - 06/00 74 -92 kW	**46-189127**	CH.Nr.: 8D-X-200001-> 8D-1-03000; serie production spring seat must be used; Conditions see certificates VA: lowering (expertise): 30 mm; axle load to: 995 kg HA: lowering (expertise): 30 mm; axle load to: 1045 kg
B12 PK	**1.6, 1.8** 07/00 - 09/01 75 -92 kW	**46-189134**	CH.Nr.: 8D-1-030001 ->; Conditions see certificates VA: lowering (expertise): 30 mm; axle load to: 995 kg HA: lowering (expertise): 30 mm; axle load to: 1045 kg
B12 PK	**1.8, 1.8 T, 1.9 TDI, 2.4, 2.6** 01/96 - 01/99 55 -132 kW	**46-183248**	CH.Nr.: 8D-X-200000 ->; serie production spring seat must be used; Conditions see certificates VA: lowering (expertise): 30 mm; axle load to: 1055 kg HA: lowering (expertise): 30 mm; axle load to: 1045 kg
B12 PK	**1.8, 1.8 T, 1.9 TDI, 2.4, 2.6** 02/99 - 06/00 55 -132 kW	**46-189141**	CH.Nr.: 8D-X-200001-> 8D-1-030000; serie production spring seat must be used; Conditions see certificates VA: lowering (expertise): 30 mm; axle load to: 1055 kg HA: lowering (expertise): 30 mm; axle load to: 1045 kg
B12 PK	**1.8 quattro** 03/98 - CH-Nr. 85 -92 kW	**46-183255**	CH.Nr.: 8D-W-006471-> 8D-1-030000; serie production spring seat must be used; Conditions see certificates VA: lowering (expertise): 30 mm; axle load to: 995 kg HA: lowering (expertise): 30 mm; axle load to: 1115 kg
B12 PK	**1.8 quattro, 1.8 T quattro, 1.9 TDI quattro, 2.4 quattro, 2.6 quattro** 03/98 - CH-Nr. 81 -132 kW	**46-183262**	CH.Nr.: 8D-W-006471-> 8D-1-030000; serie production spring seat must be used; Conditions see certificates VA: lowering (expertise): 30 mm; axle load to: 1055 kg HA: lowering (expertise): 30 mm; axle load to: 1115 kg
B12 PK	**1.8 quattro** 07/00 - 09/01 85 -92 kW	**46-189165**	CH.Nr.: 8D-1-030001 ->; Conditions see certificates VA: lowering (expertise): 30 mm; axle load to: 995 kg HA: lowering (expertise): 30 mm; axle load to: 1115 kg
B12 PK	**1.8 quattro, 1.8 T quattro, 1.9 TDI quattro, 2.4 quattro, 2.6 quattro** 07/00 - 09/01 81 -132 kW	**46-189172**	CH.Nr.: 8D-1-030001 ->; Conditions see certificates VA: lowering (expertise): 30 mm; axle load to: 1055 kg HA: lowering (expertise): 30 mm; axle load to: 1115 kg
B12 PK	**1.8, 1.8 T, 1.9 TDI, 2.4, 2.6** 07/00 - 09/01 55 -132 kW	**46-189158**	CH.Nr.: 8D-1-030001 ->; Conditions see certificates VA: lowering (expertise): 30 mm; axle load to: 1055 kg HA: lowering (expertise): 30 mm; axle load to: 1045 kg
B12 PK	**1.8 T** 02/99 - 06/00 110 -132 kW	**46-189127**	CH.Nr.: 8D-X-200001-> 8D-1-03000; serie production spring seat must be used; without AC; Conditions see certificates; manual transmission VA: lowering (expertise): 30 mm; axle load to: 995 kg HA: lowering (expertise): 30 mm; axle load to: 1045 kg
B12 PK	**1.8 T** 07/00 - 09/01 110 -132 kW	**46-189134**	CH.Nr.: 8D-1-030001 ->; without AC; Conditions see certificates; manual transmission VA: lowering (expertise): 30 mm; axle load to: 995 kg HA: lowering (expertise): 30 mm; axle load to: 1045 kg

AUDI			
AUDI A4 Avant (8D5, B5)			
B12 PK	**1.8 T quattro** 03/98 - CH-Nr. 110 -132 kW	**46-183255**	CH.Nr.: 8D-W-006471-> 8D-1-030000; serie production spring seat must be used; without AC; Conditions see certificates; manual transmission VA: lowering (expertise): 30 mm; axle load to: 995 kg HA: lowering (expertise): 30 mm; axle load to: 1115 kg
B12 PK	**1.8 T quattro** 07/00 - 09/01 110 -132 kW	**46-189165**	CH.Nr.: 8D-1-030001 ->; without AC; Conditions see certificates; manual transmission VA: lowering (expertise): 30 mm; axle load to: 995 kg HA: lowering (expertise): 30 mm; axle load to: 1115 kg
B12 PK	**2.4, 2.6, 2.8** 01/96 - 01/99 102 -142 kW	**46-183293**	CH.Nr.: 8D-X-200000 ->; serie production spring seat must be used; Conditions see certificates VA: lowering (expertise): 30 mm; axle load to: 1150 kg HA: lowering (expertise): 30 mm; axle load to: 1045 kg
B12 PK	**2.4, 2.6, 2.8** 02/99 - 06/00 110 -142 kW	**46-189219**	CH.Nr.: 8D-X-200001-> 8D-1-030000; serie production spring seat must be used; Conditions see certificates VA: lowering (expertise): 30 mm; axle load to: 1150 kg HA: lowering (expertise): 30 mm; axle load to: 1045 kg
B12 PK	**2.4, 2.6, 2.8** 07/00 - 09/01 110 -142 kW	**46-189226**	CH.Nr.: 8D-1-030001 ->; Conditions see certificates VA: lowering (expertise): 30 mm; axle load to: 1150 kg HA: lowering (expertise): 30 mm; axle load to: 1045 kg
B12 PK	**2.4 quattro, 2.6 quattro, 2.8 quattro** 07/00 - 09/01 110 -142 kW	**46-189233**	CH.Nr.: 8D-1-030001 ->; Conditions see certificates VA: lowering (expertise): 30 mm; axle load to: 1150 kg HA: lowering (expertise): 30 mm; axle load to: 1115 kg
B12 PK	**2.4 quattro, 2.6 quattro, 2.8 quattro** 03/98 - CH-Nr. 110 -142 kW	**46-183309**	CH.Nr.: 8D-W-006471-> 8D-1-030000; serie production spring seat must be used; Conditions see certificates VA: lowering (expertise): 30 mm; axle load to: 1150 kg HA: lowering (expertise): 30 mm; axle load to: 1115 kg
B12 PK	**S4 quattro** 09/97 - 09/01 195 kW	**46-183316**	serie production spring seat must be used; Conditions see certificates VA: lowering (expertise): 20 mm; axle load to: 1150 kg HA: lowering (expertise): 20 mm; axle load to: 1130 kg
B12 PK	**2.8** 01/96 - 01/99 128 -142 kW	**46-183248**	CH.Nr.: 8D-X-200000 ->; serie production spring seat must be used; Conditions see certificates; manual transmission VA: lowering (expertise): 30 mm; axle load to: 1055 kg HA: lowering (expertise): 30 mm; axle load to: 1045 kg
B12 PK	**2.8** 02/99 - 06/00 140 -142 kW	**46-189141**	CH.Nr.: 8D-X-200001-> 8D-1-030000; serie production spring seat must be used; Conditions see certificates; manual transmission VA: lowering (expertise): 30 mm; axle load to: 1055 kg HA: lowering (expertise): 30 mm; axle load to: 1045 kg
B12 PK	**2.8** 07/00 - 09/01 140 -142 kW	**46-189158**	CH.Nr.: 8D-1-030001 ->; Conditions see certificates; manual transmission VA: lowering (expertise): 30 mm; axle load to: 1055 kg HA: lowering (expertise): 30 mm; axle load to: 1045 kg
B12 PK	**2.8 quattro** 03/98 - CH-Nr. 142 kW	**46-183262**	CH.Nr.: 8D-1-030000-> 8D-W-006471; serie production spring seat must be used; Conditions see certificates; manual transmission VA: lowering (expertise): 30 mm; axle load to: 1055 kg HA: lowering (expertise): 30 mm; axle load to: 1115 kg
B12 PK	**2.8 quattro** 07/00 - 09/01 142 kW	**46-189172**	CH.Nr.: 8D-1-030001 ->; Conditions see certificates; manual transmission VA: lowering (expertise): 30 mm; axle load to: 1055 kg HA: lowering (expertise): 30 mm; axle load to: 1115 kg
B12 PK	**2.5 TDI** 01/96 - 01/99 110 kW	**46-183293**	CH.Nr.: 8D-X-200000 ->; serie production spring seat must be used; Conditions see certificates; manual transmission VA: lowering (expertise): 30 mm; axle load to: 1150 kg HA: lowering (expertise): 30 mm; axle load to: 1045 kg
B12 PK	**2.5 TDI** 02/99 - 06/00 110 kW	**46-189219**	CH.Nr.: 8D-X-200001-> 8D-1-030000; serie production spring seat must be used; Conditions see certificates; manual transmission VA: lowering (expertise): 30 mm; axle load to: 1150 kg HA: lowering (expertise): 30 mm; axle load to: 1045 kg
B12 PK	**2.5 TDI** 07/00 - 09/01 110 kW	**46-189226**	CH.Nr.: 8D-1-030001 ->; Conditions see certificates; manual transmission VA: lowering (expertise): 30 mm; axle load to: 1150 kg HA: lowering (expertise): 30 mm; axle load to: 1045 kg
B12 PK	**2.5 TDI quattro** 03/98 - CH-Nr. 110 kW	**46-183309**	CH.Nr.: 8D-W-006471-> 8D-1-030000; serie production spring seat must be used; Conditions see certificates; manual transmission VA: lowering (expertise): 30 mm; axle load to: 1150 kg HA: lowering (expertise): 30 mm; axle load to: 1115 kg

AUDI

AUDI A4 Avant (8D5, B5)

B12 PK	**2.5 TDI quattro** 07/00 - 09/01 110 kW	**46-189233**		CH.Nr.: 8D-1-030001 ->; Conditions see certificates; manual transmission VA: lowering (expertise): 30 mm; axle load to: 1150 kg HA: lowering (expertise): 30 mm; axle load to: 1115 kg
B12 SL	**1.6, 1.8, 1.8 T, 1.9 TDI, 2.4, 2.6, 2.8** 01/96 - 01/99 55 -142 kW	**46-183361**		-> CH.Nr.: 8D-X-200000; serie production spring seat must be used; Conditions see certificates VA: lowering (expertise): 45-50 mm; axle load to: 1070 kg HA: lowering (expertise): 35-40 mm; axle load to: 1010 kg
B12 SL	**1.6, 1.8, 1.8 T, 1.9 TDI, 2.4, 2.6** 02/99 - 06/00 55 -132 kW	**46-189257**		CH.Nr.: 8D-X-200001-> 8D-1-030000; serie production spring seat must be used; Conditions see certificates VA: lowering (expertise): 45-50 mm; axle load to: 1070 kg HA: lowering (expertise): 35-40 mm; axle load to: 1010 kg
B12 SL	**1.6, 1.8, 1.8 T, 1.9 TDI, 2.4, 2.6** 07/00 - CH-Nr. 55 -132 kW	**46-189264**		-> CH.Nr.: 8D-1-030001; Conditions see certificates VA: lowering (expertise): 45-50 mm; axle load to: 1070 kg HA: lowering (expertise): 35-40 mm; axle load to: 1010 kg
B12 SL	**2.8** 02/99 - 06/00 140 -142 kW	**46-189257**		CH.Nr.: 8D-X-200001-> 8D-1-030000; serie production spring seat must be used; Conditions see certificates; manual transmission VA: lowering (expertise): 45-50 mm; axle load to: 1070 kg HA: lowering (expertise): 35-40 mm; axle load to: 1010 kg
B12 SL	**2.8** 07/00 - CH-Nr. 140 -142 kW	**46-189264**		-> CH.Nr.: 8D-1-030001; Conditions see certificates; manual transmission VA: lowering (expertise): 45-50 mm; axle load to: 1070 kg HA: lowering (expertise): 35-40 mm; axle load to: 1010 kg
B16 PSS9	**1.6, 1.8, 1.8 T, 1.9 TDI, 2.4, 2.5 TDI, 2.6, 2.8** 11/94 - 09/01 55 -142 kW	**48-086059**		Conditions see certificates VA: lowering (expertise): 35-55 mm; axle load to: 1150 kg HA: lowering (expertise): 30-50 mm; axle load to: 1020 kg
B16 PSS9	**1.8 quattro, 1.8 T quattro, 1.9 TDI quattro, 2.4 quattro, 2.5 TDI quattro, 2.6 quattro, 2.8 quattro** 07/95 - 09/01 81 -142 kW	**48-086103**		without ride height adjustment; Conditions see certificates VA: lowering (expertise): 30-50 mm; axle load to: 1150 kg HA: lowering (expertise): 30-50 mm; axle load to: 1140 kg
B16 PSS9	**RS4 quattro, S4 quattro** 09/97 - 09/01 195 -280 kW	**48-086165**		Conditions see certificates VA: lowering (expertise): 15-35 mm; axle load to: 1150 kg HA: lowering (expertise): 10-30 mm; axle load to: 1140 kg

AUDI A4 (8E2, B6)

B1	**1.6, 1.8 T, 1.8 T quattro, 1.9 TDI, 1.9 TDI quattro, 2.0, 2.0 FSI, 2.4, 2.5 D, 2.5 TDI, 2.5 TDI quattro, 3.0, 3.0 quattro** 10/00 - 12/04 74 -162 kW	**12-117642**		VA: Material: Rubber/Metal; without ball bearing
B3	**1.6** 11/00 - 12/04 75 kW	**37-147808**	**36-147854**	with standard chassis
B3	**1.6** 11/00 - 12/04 75 kW	**37-147815**	**36-147861**	with standard chassis; Heavy Duty Version .
B3	**1.6** 11/00 - 12/04 75 kW	**37-147921**	**36-147977**	with sports suspension
B3	**1.6** 11/00 - 12/04 75 kW	**37-147938**	**36-147984**	with sports suspension; Heavy Duty Version .
B3	**1.8 T** 11/00 - 12/04 110 -140 kW	**37-147822**	**36-147915**	with standard chassis
B3	**1.8 T** 11/00 - 12/04 110 -140 kW	**37-147839**	**36-147892**	with standard chassis; Heavy Duty Version .
B3	**1.8 T** 11/00 - 12/04 110 -140 kW	**37-147945**	**36-147991**	with sports suspension
B3	**1.8 T, 1.9 TDI** 11/00 - 12/04 74 -140 kW	**37-147952**	**36-148011**	with sports suspension; Heavy Duty Version .
B3	**1.8 T quattro** 11/00 - 12/04 110 -140 kW	**37-147839**	**36-147878**	with standard chassis

AUDI				
AUDI A4 (8E2, B6)				
B3	**1.8 T quattro** 11/00 - 12/04 110 -140 kW	**37-147846**	**36-147892**	with standard chassis; Heavy Duty Version .
B3	**1.8 T quattro** 11/00 - 12/04 110 -140 kW	**37-147952**	**36-147991**	with sports suspension
B3	**1.8 T quattro, 1.9 TDI, 2.4, 3.0** 11/00 - 12/04 96 -162 kW	**37-147969**	**36-148011**	with sports suspension; Heavy Duty Version .
B3	**2.0** 11/00 - 12/04 96 kW	**37-147815**	**36-147861**	with standard chassis
B3	**2.0** 11/00 - 12/04 96 kW	**37-147822**	**36-147885**	with standard chassis; Heavy Duty Version .
B3	**2.0** 11/00 - 12/04 96 kW	**37-147938**	**36-147984**	with sports suspension
B3	**2.0** 11/00 - 12/04 96 kW	**37-147945**	**36-148004**	with sports suspension; Heavy Duty Version .
B3	**2.0 FSI** 07/02 - 12/04 110 kW	**37-147822**	**36-147861**	with standard chassis
B3	**2.0 FSI** 07/02 - 12/04 110 kW	**37-147839**	**36-147885**	with standard chassis; Heavy Duty Version .
B3	**2.0 FSI** 07/02 - 12/04 110 kW	**37-147945**	**36-147984**	with sports suspension
B3	**2.0 FSI** 07/02 - 12/04 110 kW	**37-147952**	**36-148004**	with sports suspension; Heavy Duty Version .
B3	**2.4, 3.0** 11/00 - 12/04 120 -162 kW	**37-147839**	**36-147885**	with standard chassis
B3	**2.4, 3.0** 11/00 - 12/04 120 -162 kW	**37-147846**	**36-147892**	with standard chassis; Heavy Duty Version .
B3	**2.4, 3.0** 11/00 - 12/04 120 -162 kW	**37-147952**	**36-148004**	with sports suspension
B3	**3.0 quattro** 11/00 - 12/04 160 -162 kW	**37-147846**	**36-147885**	with standard chassis
B3	**3.0 quattro** 11/00 - 12/04 160 -162 kW	**37-147969**	**36-148004**	with sports suspension
B3	**1.9 TDI** 05/01 - 12/04 74 -85 kW	**37-147822**	**36-147878**	with standard chassis
B3	**1.9 TDI** 05/01 - 12/04 74 -85 kW	**37-147839**	**36-147892**	with standard chassis; Heavy Duty Version .
B3	**1.9 TDI** 05/01 - 12/04 74 -85 kW	**37-147945**	**36-147991**	with sports suspension
B3	**2.5 D, 2.5 TDI, 2.5 TDI quattro** 10/00 - 12/04 114 -132 kW	**37-147846**	**36-147892**	with standard chassis
B3	**2.5 D, 2.5 TDI, 2.5 TDI quattro** 10/00 - 12/04 114 -132 kW	**37-147969**	**36-148011**	with sports suspension
B3	**2.5 D, 2.5 TDI, 2.5 TDI quattro** 10/00 - 12/04 114 -132 kW	**36-212613**	**36-148011**	with sports suspension; Heavy Duty Version .
B3	**1.9 TDI** 11/00 - 12/04 96 kW	**37-147839**	**36-147878**	with standard chassis
B3	**1.9 TDI** 11/00 - 12/04 96 kW	**37-147846**	**36-147892**	with standard chassis; Heavy Duty Version .

AUDI

AUDI A4 (8E2, B6)

B3	**1.9 TDI** 11/00 - 12/04 96 kW	**37-147839**	**36-147991**	with sports suspension
B3	**1.9 TDI quattro** 11/01 - 12/04 96 kW	**37-147846**	**36-147878**	with standard chassis
B3	**1.9 TDI quattro, 3.0 quattro** 11/00 - 12/04 96 -162 kW		**36-147892**	with standard chassis; Heavy Duty Version .
B3	**1.9 TDI quattro** 11/01 - 12/04 96 kW	**37-147969**	**36-147991**	with sports suspension
B3	**1.9 TDI quattro, 3.0 quattro** 11/00 - 12/04 96 -162 kW	**36-212613**	**36-148011**	with sports suspension; Heavy Duty Version .
B4	**1.6, 1.8 T, 1.8 T quattro, 1.9 TDI, 1.9 TDI quattro, 2.0, 2.0 FSI, 2.4, 2.5 D, 2.5 TDI, 2.5 TDI quattro, 3.0, 3.0 quattro** 10/00 - 09/02 74 -162 kW	**19-109497**	**19-111797** **11-149835** SP	-> CH.Nr.: 8E-2-400 000; with standard chassis
B4	**1.6, 1.8 T, 1.8 T quattro, 1.9 TDI, 1.9 TDI quattro, 2.0, 2.0 FSI, 2.4, 2.5 D, 2.5 TDI, 2.5 TDI quattro, 3.0, 3.0 quattro** 10/00 - 09/02 74 -162 kW	**19-109510**	**19-111803** **11-149835** SP	-> CH.Nr.: 8E-2-400 000; with sports suspension
B6 Sport	**1.6, 1.8 T, 1.8 T quattro, 1.9 TDI, 1.9 TDI quattro, 2.0, 2.0 FSI, 2.4, 2.5 D, 2.5 TDI, 2.5 TDI quattro, 3.0, 3.0 quattro** 10/00 - 09/02 74 -162 kW	**24-065146**	**24-065153**	-> CH.Nr.: 8E-2-400 000; with standard chassis
B6 Sport	**1.6, 1.8 T, 1.8 T quattro, 1.9 TDI, 1.9 TDI quattro, 2.0, 2.0 FSI, 2.4, 2.5 D, 2.5 TDI, 2.5 TDI quattro, 3.0, 3.0 quattro** 10/02 - 12/04 74 -162 kW	**24-119788**	**24-119795**	CH.Nr.: 8E-2-400001 ->; with standard chassis
B8	**1.6, 1.8 T, 1.8 T quattro, 1.9 TDI, 1.9 TDI quattro, 2.0, 2.0 FSI, 2.4, 2.5 D, 2.5 TDI, 2.5 TDI quattro, 3.0, 3.0 quattro** 10/00 - 09/02 74 -162 kW	**24-065160**	**24-065177**	-> CH.Nr.: 8E-2-400 000; with sports suspension
B8	**1.6, 1.8 T, 1.8 T quattro, 1.9 TDI, 1.9 TDI quattro, 2.0, 2.0 FSI, 2.4, 2.5 D, 2.5 TDI, 2.5 TDI quattro, 3.0, 3.0 quattro** 10/02 - 12/04 74 -162 kW	**24-119818**	**24-119825**	CH.Nr.: 8E-2-400001 ->; with sports suspension
B12 PK	**1.6, 1.8 T, 2.0, 2.0 FSI** 11/00 - 09/02 75 -125 kW	**46-182968**		-> CH.Nr.: 8E-2-400 000; Conditions see certificates VA: lowering (expertise): 30 mm; axle load to: 1090 kg HA: lowering (expertise): 30 mm; axle load to: 1035 kg
B12 PK	**1.6, 1.8 T, 2.0, 2.0 FSI** 10/02 - 12/04 75 -140 kW	**46-188465**		CH.Nr.: 8E-2-400001 ->; Conditions see certificates VA: lowering (expertise): 30 mm; axle load to: 1090 kg HA: lowering (expertise): 30 mm; axle load from: 1035 kg
B12 PK	**1.8 T quattro** 11/00 - 09/02 110 -125 kW	**46-182999**		-> CH.Nr.: 8E-2-400 000; Conditions see certificates VA: lowering (expertise): 30 mm; axle load to: 1090 kg HA: lowering (expertise): 30 mm; axle load to: 1130 kg
B12 PK	**1.8 T quattro, 1.9 TDI quattro, 3.0 quattro** 11/00 - 09/02 96 -162 kW	**46-183002**		-> CH.Nr.: 8E-2-400 000; Conditions see certificates VA: lowering (expertise): 30 mm; axle load to: 1165 kg HA: lowering (expertise): 30 mm; axle load to: 1130 kg
B12 PK	**1.8 T quattro** 10/02 - 12/04 120 -140 kW	**46-188496**		CH.Nr.: 8E-2-400001 ->; Conditions see certificates VA: lowering (expertise): 30 mm; axle load to: 1090 kg HA: lowering (expertise): 30 mm; axle load from: 1130 kg
B12 PK	**1.8 T quattro, 1.9 TDI quattro, 3.0 quattro** 10/02 - 12/04 96 -162 kW	**46-188502**		CH.Nr.: 8E-2-400001 ->; Conditions see certificates VA: lowering (expertise): 30 mm; axle load to: 1165 kg HA: lowering (expertise): 30 mm; axle load from: 1130 kg
B12 PK	**1.9 TDI, 2.4, 3.0** 11/00 - 09/02 74 -162 kW	**46-182975**		-> CH.Nr.: 8E-2-400 000; Conditions see certificates VA: lowering (expertise): 30 mm; axle load to: 1165 kg HA: lowering (expertise): 30 mm; axle load to: 1035 kg

AUDI				
AUDI A4 (8E2, B6)				
B12 PK	**1.9 TDI, 2.4, 3.0** 10/02 - 12/04 74 -162 kW		**46-188472**	CH.Nr.: 8E-2-400001 ->; Conditions see certificates VA: lowering (expertise): 30 mm; axle load to: 1165 kg HA: lowering (expertise): 30 mm; axle load from: 1035 kg
B12 PK	**2.5 TDI** 08/01 - 09/02 114 -120 kW		**46-183019**	-> CH.Nr.: 8E-2-400 000; Conditions see certificates VA: lowering (expertise): 30 mm; axle load to: 1230 kg HA: lowering (expertise): 30 mm; axle load to: 1035 kg
B12 PK	**2.5 TDI** 10/02 - 12/04 120 kW		**46-188519**	CH.Nr.: 8E-2-400001 ->; Conditions see certificates VA: lowering (expertise): 30 mm; axle load to: 1230 kg HA: lowering (expertise): 30 mm; axle load from: 1035 kg
B12 PK	**2.5 TDI quattro** 11/00 - 09/02 132 kW		**46-182982**	-> CH.Nr.: 8E-2-400 000; Conditions see certificates VA: lowering (expertise): 30 mm; axle load to: 1230 kg HA: lowering (expertise): 30 mm; axle load to: 1130 kg
B12 PK	**2.5 TDI quattro** 10/02 - 12/04 132 kW		**46-188489**	CH.Nr.: 8E-2-400001 ->; Conditions see certificates VA: lowering (expertise): 30 mm; axle load to: 1230 kg HA: lowering (expertise): 30 mm; axle load from: 1130 kg
B12 SL	**1.6, 1.8 T, 2.0, 2.0 FSI** 11/00 - 09/02 75 -125 kW		**46-183378**	-> CH.Nr.: 8E-2-400 000; Conditions see certificates VA: lowering (expertise): 45-50 mm; axle load to: 1090 kg HA: lowering (expertise): 35-40 mm; axle load to: 1035 kg
B12 SL	**1.6, 1.8 T, 2.0, 2.0 FSI** 10/02 - 12/04 75 -140 kW		**46-188588**	CH.Nr.: 8E-2-400001 ->; Conditions see certificates VA: lowering (expertise): 45-50 mm; axle load to: 1090 kg HA: lowering (expertise): 35-40 mm; axle load from: 1035 kg
B12 SL	**1.9 TDI, 2.4, 3.0** 11/00 - 09/02 74 -162 kW		**46-183385**	-> CH.Nr.: 8E-2-400 000; Conditions see certificates VA: lowering (expertise): 45-50 mm; axle load to: 1140 kg HA: lowering (expertise): 35-40 mm; axle load to: 1035 kg
B12 SL	**1.9 TDI, 2.4, 3.0** 10/02 - 12/04 74 -162 kW		**46-188595**	CH.Nr.: 8E-2-400001 ->; Conditions see certificates VA: lowering (expertise): 45-50 mm; axle load to: 1140 kg HA: lowering (expertise): 35-40 mm; axle load from: 1035 kg
B14	**1.6, 1.8 T, 1.8 T quattro, 1.9 TDI, 1.9 TDI quattro, 2.0, 2.0 FSI, 2.4, 2.5 D, 2.5 TDI, 2.5 TDI quattro, 3.0, 3.0 quattro** 10/00 - 12/04 74 -162 kW		**47-169289**	Conditions see certificates VA: lowering (expertise): 30-60 mm; axle load to: 1250 kg HA: lowering (expertise): 20-50 mm; axle load to: 1170 kg
B14	**S4 quattro** 03/03 - 12/04 253 kW		*47-119444*	Conditions see certificates VA: lowering (expertise): 10-30 mm; axle load to: 1250 kg HA: lowering (expertise): 10-30 mm; axle load to: 1170 kg
B16 PSS9	**1.6, 1.8 T, 1.8 T quattro, 1.9 TDI, 1.9 TDI quattro, 2.0, 2.0 FSI, 2.4, 2.5 D, 2.5 TDI, 2.5 TDI quattro, 3.0, 3.0 quattro** 10/00 - 12/04 74 -162 kW		**48-169301**	Conditions see certificates VA: lowering (expertise): 30-60 mm; axle load to: 1250 kg HA: lowering (expertise): 20-50 mm; axle load to: 1170 kg
B16 PSS9	**S4 quattro** 03/03 - 12/04 253 kW		**48-105958**	Conditions see certificates VA: lowering (expertise): 10-30 mm; axle load to: 1250 kg HA: lowering (expertise): 10-30 mm; axle load to: 1170 kg
AUDI A4 Avant (8E5, B6)				
B1	**1.6, 1.8 T, 1.8 T quattro, 1.9 TDI, 1.9 TDI quattro, 2.0, 2.0 FSI, 2.4, 2.5 TDi, 2.5 TDI quattro, 3.0, 3.0 quattro** 04/01 - 12/04 74 -162 kW	**12-117642**		VA: Material: Rubber/Metal; without ball bearing
B3	**1.6** 09/01 - 12/04 75 kW	**37-147808**	**36-147885**	with standard chassis
B3	**1.6** 09/01 - 12/04 75 kW	**37-147808**	**36-147892**	with standard chassis; Heavy Duty Version .
B3	**1.6** 09/01 - 12/04 75 kW	**37-147921**	**36-148004**	with sports suspension
B3	**1.6** 09/01 - 12/04 75 kW	**37-147938**	**36-148011**	with sports suspension; Heavy Duty Version .
B3	**1.8 T, 2.0 FSI** 09/01 - 12/04 110 -140 kW	**37-147822**	**36-147892**	with standard chassis

AUDI				
AUDI A4 Avant (8E5, B6)				
B3	**1.8 T, 2.0 FSI** 09/01 - 12/04 110 -140 kW	**37-147839**	**36-147908**	with standard chassis; Heavy Duty Version .
B3	**1.8 T, 1.9 TDI, 2.0 FSI** 09/01 - 12/04 74 -140 kW	**37-147945**	**36-148011**	with sports suspension
B3	**1.8 T, 2.0 FSI** 09/01 - 12/04 110 -140 kW	**37-147952**	**36-148028**	with sports suspension; Heavy Duty Version .
B3	**1.8 T quattro** 09/01 - 12/04 110 -140 kW	**37-147839**	**36-147892**	with standard chassis
B3	**1.8 T quattro, 1.9 TDI** 09/01 - 12/04 96 -140 kW	**37-147846**	**36-147908**	with standard chassis; Heavy Duty Version .
B3	**1.8 T quattro** 09/01 - 12/04 110 -140 kW	**37-147952**	**36-148011**	with sports suspension
B3	**1.8 T quattro** 09/01 - 12/04 110 -140 kW	**37-147969**	**36-148264**	with sports suspension; Heavy Duty Version .
B3	**2.0** 09/01 - 12/04 96 kW	**37-147815**	**36-147885**	with standard chassis
B3	**2.0** 09/01 - 12/04 96 kW	**37-147815**	**36-147892**	with standard chassis; Heavy Duty Version .
B3	**2.0** 09/01 - 12/04 96 kW	**37-147938**	**36-148004**	with sports suspension
B3	**2.0** 09/01 - 12/04 96 kW	**37-147945**	**36-148011**	with sports suspension; Heavy Duty Version .
B3	**2.4, 3.0** 04/01 - 12/04 120 -162 kW	**37-147839**	**36-147908**	with standard chassis
B3	**2.4, 3.0** 04/01 - 12/04 120 -162 kW	**37-147846**	**36-147915**	with standard chassis; Heavy Duty Version .
B3	**2.4, 3.0** 04/01 - 12/04 120 -162 kW	**37-147952**	**36-148028**	with sports suspension
B3	**2.4, 3.0** 04/01 - 12/04 120 -162 kW	**37-147969**	**36-148264**	with sports suspension; Heavy Duty Version .
B3	**3.0 quattro** 04/01 - 12/04 160 -162 kW	**37-147846**	**36-147908**	with standard chassis
B3	**3.0 quattro** 04/01 - 12/04 160 -162 kW		**36-147915**	with standard chassis; Heavy Duty Version .
B3	**3.0 quattro** 04/01 - 12/04 160 -162 kW	**37-147969**	**36-148028**	with sports suspension
B3	**1.9 TDI** 11/01 - 12/04 74 -85 kW	**37-147822**	**36-147892**	with standard chassis
B3	**1.9 TDI** 11/01 - 12/04 74 -85 kW	**37-147839**	**36-147908**	with standard chassis; Heavy Duty Version .
B3	**1.9 TDI** 11/01 - 12/04 74 -85 kW	**37-147952**	**36-148028**	with sports suspension; Heavy Duty Version .
B3	**2.5 TDi, 2.5 TDI quattro** 10/00 - 12/04 114 -132 kW	**37-147846**	**36-147915**	with standard chassis
B3	**2.5 TDi** 10/00 - 12/04 114 -132 kW	**37-147969**	**36-148264**	with sports suspension
B3	**2.5 TDi, 2.5 TDI quattro** 10/00 - 12/04 114 -132 kW		**36-148035**	with sports suspension; Heavy Duty Version .

AUDI				
AUDI A4 Avant (8E5, B6)				
B3	**1.9 TDI** 09/01 - 12/04 96 kW	**37-147839**	**36-147892**	with standard chassis
B3	**1.9 TDI** 09/01 - 12/04 96 kW	**37-147839**	**36-148011**	with sports suspension
B3	**1.9 TDI** 09/01 - 12/04 96 kW	**37-147969**	**36-148028**	with sports suspension; Heavy Duty Version .
B3	**1.9 TDI quattro** 11/01 - 12/04 96 kW	**37-147846**	**36-147892**	with standard chassis
B3	**1.9 TDI quattro** 11/01 - 12/04 96 kW		**36-147908**	with standard chassis; Heavy Duty Version .
B3	**1.9 TDI quattro** 11/01 - 12/04 96 kW	**37-147969**	**36-148011**	with sports suspension
B3	**1.9 TDI quattro, 3.0 quattro** 09/01 - 12/04 96 -162 kW		**36-148264**	with sports suspension; Heavy Duty Version .
B3	**2.5 TDI quattro** 09/01 - 12/04 132 kW	**37-147969**	**36-148264**	with sports suspension
B4	**1.6, 1.8 T, 1.8 T quattro, 1.9 TDI, 1.9 TDI quattro, 2.0, 2.0 FSI, 2.4, 2.5 TDi, 2.5 TDI quattro, 3.0, 3.0 quattro** 10/00 - 12/05 74 -162 kW	**19-109497** HR	**19-111797** HO **11-149835** SP	-> CH.Nr.: 8E-5-400 000; with standard chassis
B4	**1.6, 1.8 T, 1.8 T quattro, 1.9 TDI, 1.9 TDI quattro, 2.0, 2.0 FSI, 2.4, 2.5 TDi, 2.5 TDI quattro, 3.0, 3.0 quattro** 04/01 - CH-Nr. 74 -162 kW	**19-109497** HR	**19-111797** HO **11-149835** SP	-> CH.Nr.: 8E-5-400 000; with standard chassis; axle load from: 819 kg
B4	**1.6, 1.8 T, 1.8 T quattro, 1.9 TDI, 1.9 TDI quattro, 2.0, 2.0 FSI, 2.4, 2.5 TDi, 2.5 TDI quattro, 3.0, 3.0 quattro** 10/00 - 12/05 74 -162 kW	**19-109510** HR	**19-111803** HO **11-149835** SP	-> CH.Nr.: 8E-5-400 000; with sports suspension
B6 Sport	**1.6, 1.8 T, 1.8 T quattro, 1.9 TDI, 1.9 TDI quattro, 2.0, 2.0 FSI, 2.4, 2.5 TDi, 2.5 TDI quattro, 3.0, 3.0 quattro** 04/01 - 12/05 74 -162 kW	**24-065146** HR	**24-065153** HO	-> CH.Nr.: 8E-5-400 000; with standard chassis
B6 Sport	**1.6, 1.8 T, 1.8 T quattro, 1.9 TDI, 1.9 TDI quattro, 2.0, 2.0 FSI, 2.4, 2.5 TDi, 2.5 TDI quattro, 3.0, 3.0 quattro** CH-Nr. - 12/04 74 -162 kW	**24-119788** HR	**24-119795** HO	CH.Nr.: 8E-5-400 001 ->; with standard chassis
B8	**1.6, 1.8 T, 1.8 T quattro, 1.9 TDI, 1.9 TDI quattro, 2.0, 2.0 FSI, 2.4, 2.5 TDi, 2.5 TDI quattro, 3.0, 3.0 quattro, S4 quattro** 04/01 - 12/05 74 -253 kW	**24-065160** HR	**24-065177** HO	-> CH.Nr.: 8E-5-400 000; with sports suspension
B8	**1.6, 1.8 T, 1.8 T quattro, 1.9 TDI, 1.9 TDI quattro, 2.0, 2.0 FSI, 2.4, 2.5 TDi, 2.5 TDI quattro, 3.0, 3.0 quattro** CH-Nr. - 12/04 74 -162 kW	**24-119818** HR	**24-119825** HO	CH.Nr.: 8E-5-400 001 ->; with sports suspension
B12 PK	**1.6, 1.8 T, 2.0, 2.0 FSI** 09/01 - 12/05 75 -140 kW	**46-183026**		-> CH.Nr.: 8E-5-400 000; Conditions see certificates VA: lowering (expertise): 30 mm; axle load to: 1090 kg HA: lowering (expertise): 30 mm; axle load to: 1130 kg
B12 PK	**1.8 T quattro** 09/01 - 12/05 110 -140 kW	**46-183064**		-> CH.Nr.: 8E-5-400 000; Conditions see certificates VA: lowering (expertise): 30 mm; axle load to: 1090 kg HA: lowering (expertise): 30 mm; axle load to: 1150 kg

AUDI				
AUDI A4 Avant (8E5, B6)				
B12 PK	**1.8 T quattro, 1.9 TDI quattro, 3.0 quattro** 04/01 - 12/05 96 -162 kW	**46-183071**		-> CH.Nr.: 8E-5-400 000; Conditions see certificates VA: lowering (expertise): 30 mm; axle load to: 1165 kg HA: lowering (expertise): 30 mm; axle load to: 1150 kg
B12 PK	**1.8 T quattro** CH-Nr. - 12/04 110 -140 kW	**46-188564**		CH.Nr.: 8E-5-400 001 ->; Conditions see certificates VA: lowering (expertise): 30 mm; axle load to: 1090 kg HA: lowering (expertise): 30 mm; axle load to: 1150 kg
B12 PK	**1.8 T quattro, 1.9 TDI quattro, 3.0 quattro** CH-Nr. - 12/04 96 -162 kW	**46-188571**		CH.Nr.: 8E-5-400 001 ->; Conditions see certificates VA: lowering (expertise): 30 mm; axle load to: 1165 kg HA: lowering (expertise): 30 mm; axle load to: 1150 kg
B12 PK	**1.8 T, 2.0, 2.0 FSI** CH-Nr. - 12/04 96 -140 kW	**46-188526**		CH.Nr.: 8E-5-400 001 ->; Conditions see certificates VA: lowering (expertise): 30 mm; axle load to: 1090 kg HA: lowering (expertise): 30 mm; axle load to: 1130 kg
B12 PK	**1.9 TDI, 2.4, 3.0** 09/01 - 12/05 74 -162 kW	**46-183033**		-> CH.Nr.: 8E-5-400 000; Conditions see certificates VA: lowering (expertise): 30 mm; axle load to: 1165 kg HA: lowering (expertise): 30 mm; axle load to: 1130 kg
B12 PK	**1.9 TDI, 2.4, 3.0** CH-Nr. - 12/04 74 -162 kW	**46-188533**		CH.Nr.: 8E-5-400 001 ->; Conditions see certificates VA: lowering (expertise): 30 mm; axle load to: 1165 kg HA: lowering (expertise): 30 mm; axle load to: 1130 kg
B12 PK	**2.5 TDi** 10/00 - 12/05 114 -132 kW	**46-183040**		-> CH.Nr.: 8E-5-400 000; Conditions see certificates VA: lowering (expertise): 30 mm; axle load to: 1230 kg HA: lowering (expertise): 30 mm; axle load to: 1130 kg
B12 PK	**2.5 TDi** CH-Nr. - 12/04 114 -132 kW	**46-188540**		CH.Nr.: 8E-5-400 001 ->; Conditions see certificates VA: lowering (expertise): 30 mm; axle load to: 1230 kg HA: lowering (expertise): 30 mm; axle load to: 1130 kg
B12 PK	**2.5 TDI quattro** 09/01 - 12/05 132 kW	**46-183057**		-> CH.Nr.: 8E-5-400 000; Conditions see certificates VA: lowering (expertise): 30 mm; axle load to: 1230 kg HA: lowering (expertise): 30 mm; axle load to: 1150 kg
B12 PK	**2.5 TDI quattro** CH-Nr. - 12/04 132 kW	**46-188557**		CH.Nr.: 8E-5-400 001 ->; Conditions see certificates VA: lowering (expertise): 30 mm; axle load to: 1230 kg HA: lowering (expertise): 30 mm; axle load to: 1150 kg
B12 SL	**1.6, 1.8 T, 2.0, 2.0 FSI** 09/01 - 12/05 75 -140 kW	**46-182401**		-> CH.Nr.: 8E-5-400 000; Conditions see certificates VA: lowering (expertise): 45-50 mm; axle load to: 1090 kg HA: lowering (expertise): 35-40 mm; axle load to: 1090 kg
B12 SL	**1.6, 1.8 T, 2.0, 2.0 FSI** CH-Nr. - 12/04 75 -140 kW	**46-188601**		CH.Nr.: 8E-5-400 001 ->; Conditions see certificates VA: lowering (expertise): 45-50 mm; axle load to: 1090 kg HA: lowering (expertise): 35-40 mm; axle load to: 1090 kg
B12 SL	**1.9 TDI, 2.4, 3.0** 09/01 - 12/05 74 -162 kW	**46-182418**		-> CH.Nr.: 8E-5-400 000; Conditions see certificates VA: lowering (expertise): 45-50 mm; axle load to: 1140 kg HA: lowering (expertise): 35-40 mm; axle load to: 1090 kg
B12 SL	**1.9 TDI, 2.4, 3.0** CH-Nr. - 12/04 74 -162 kW	**46-188618**		CH.Nr.: 8E-5-400 001 ->; Conditions see certificates VA: lowering (expertise): 45-50 mm; axle load to: 1140 kg HA: lowering (expertise): 35-40 mm; axle load to: 1090 kg
B14	**1.6, 1.8 T, 1.8 T quattro, 1.9 TDI, 1.9 TDI quattro, 2.0, 2.0 FSI, 2.4, 2.5 TDi, 2.5 TDI quattro, 3.0, 3.0 quattro** 04/01 - 12/04 74 -162 kW	**47-169289**		Conditions see certificates VA: lowering (expertise): 30-60 mm; axle load to: 1250 kg HA: lowering (expertise): 20-50 mm; axle load to: 1170 kg
B14	**S4 quattro** 03/03 - 12/04 253 kW	*47-119444*		Conditions see certificates VA: lowering (expertise): 10-30 mm; axle load to: 1250 kg HA: lowering (expertise): 10-30 mm; axle load to: 1170 kg
B16 PSS9	**1.6, 1.8 T, 1.8 T quattro, 1.9 TDI, 1.9 TDI quattro, 2.0, 2.0 FSI, 2.4, 2.5 TDi, 2.5 TDI quattro, 3.0, 3.0 quattro** 04/01 - 12/04 74 -162 kW	**48-169301**		Conditions see certificates VA: lowering (expertise): 30-60 mm; axle load to: 1250 kg HA: lowering (expertise): 20-50 mm; axle load to: 1170 kg
B16 PSS9	**S4 quattro** 03/03 - CH-Nr. 253 kW	**48-105958**		-> CH.Nr.: 8E-2-400 000; Conditions see certificates VA: lowering (expertise): 10-30 mm; axle load to: 1250 kg HA: lowering (expertise): 10-30 mm; axle load to: 1170 kg
AUDI A4 Convertible (8H7, 8HE)				
B1	**1.8 T, 1.8 T quattro, 2.0, 2.0 TDI, 2.0 TFSI, 2.0 TFSi quattro, 2.4, 2.5 TDI, 2.7 TDI, 3.0, 3.0 quattro, 3.0 TDI quattro, 3.2 FSI, 3.2 FSI quattro** 04/02 - 03/09 96 -188 kW	**12-224463**		VA: without ball bearing
B3	**1.8 T, 2.0** 07/02 - 03/09 96 -120 kW	**37-147945**	**36-148035**	with standard chassis

AUDI

AUDI A4 Convertible (8H7, 8HE)

B3	**1.8 T, 2.0** 07/02 - 03/09 96 -120 kW	**37-147952**	**36-148035**	with standard chassis; Heavy Duty Version .
B3	**1.8 T quattro, 3.0** 04/02 - 03/09 120 -162 kW	**37-147952**	**36-148035**	with standard chassis
B3	**1.8 T quattro, 3.0** 04/02 - 03/09 120 -162 kW	**37-147969**	**36-148035**	with standard chassis; Heavy Duty Version .
B3	**2.4, 2.5 TDI** 04/02 - 12/05 120 -125 kW	**37-147952**	**36-148035**	with standard chassis
B3	**2.4, 2.5 TDI** 04/02 - 12/05 120 -125 kW	**37-147969**		with standard chassis; Heavy Duty Version .
B3	**3.0 quattro** 05/03 - 12/05 162 kW	**37-147969**	**36-148035**	with standard chassis
B3	**2.0 TDI, 2.0 TFSI** 01/06 - 03/09 100 -147 kW	**37-147945**	**36-148264**	with standard chassis
B3	**2.0 TDI, 2.0 TFSI** 01/06 - 03/09 100 -147 kW	**37-147952**	**36-148035**	with standard chassis; Heavy Duty Version .
B3	**2.7 TDI** 06/06 - 03/09 132 kW	**37-147952**	**36-148035**	with standard chassis
B3	**2.7 TDI** 06/06 - 03/09 132 kW	**37-147969**		with standard chassis; Heavy Duty Version .
B4	**1.8, 1.8 T, 1.8 T quattro, 2.0, 2.4, 2.5 TDI, 3.0, 3.0 quattro** 04/02 - CH-Nr. 96 -162 kW	**19-109497** HT	**19-111797** HO **11-149835** SP	-> CH.Nr.: 8H-7-400 000; with standard chassis
B4	**1.8, 1.8 T, 1.8 T quattro, 2.0, 2.4, 2.5 TDI, 3.0, 3.0 quattro** 04/02 - CH-Nr. 96 -162 kW	**19-109510** HT	**19-111803** HO **11-149835** SP	-> CH.Nr.: 8H-7-400 000; with sports suspension
B6 Sport	**1.8 T, 1.8 T quattro, 2.0, 2.0 TDI, 2.0 TFSI, 2.0 TFSi quattro, 2.7 TDI, 3.0 TDI quattro, 3.2 FSI, 3.2 FSI quattro** 01/07 - 03/09 100 -188 kW	**24-119788** HT	**24-119795** HO	CH.Nr.: 8E-7-400 001 ->; with standard chassis
B6 Sport	**1.8, 1.8 T, 1.8 T quattro, 2.0, 2.0 TFSI, 2.0 TFSi quattro, 2.4, 2.5 TDI, 3.0, 3.0 quattro** 04/02 - 12/06 96 -162 kW	**24-065146** HT	**24-065153** HO	-> CH.Nr.: 8H-7-400 000; with standard chassis
B8	**1.8 T, 1.8 T quattro, 2.0, 2.0 TDI, 2.0 TFSI, 2.0 TFSi quattro, 2.7 TDI, 3.0 TDI quattro, 3.2 FSI, 3.2 FSI quattro** 01/07 - 03/09 100 -188 kW	**24-119818** HT	**24-119825** HO	CH.Nr.: 8E-7-400 001 ->; with sports suspension
B8	**1.8, 1.8 T, 1.8 T quattro, 2.0, 2.0 TFSI, 2.0 TFSi quattro, 2.4, 2.5 TDI, 3.0, 3.0 quattro** 04/02 - 12/06 96 -162 kW	**24-065160** HT	**24-065177** HO	-> CH.Nr.: 8H-7-400 000; with sports suspension
B8	**S4 quattro** 03/04 - 03/09 253 kW	**24-119818** HT	**24-119825** HO	
B8	**RS4 quattro** 06/06 - 03/09 309 kW	**24-119818** HT	**24-119825** HO	disconect DRC
B12 PK	**1.8 T, 2.0 TDI, 2.0 TFSI** 01/07 - 03/09 100 -147 kW	**46-188687**		CH.Nr.: 8E-7-400 001 ->; Conditions see certificates VA: lowering (expertise): 20 mm; axle load to: 1150 kg HA: lowering (expertise): 20 mm; axle load to: 1100 kg
B12 PK	**1.8, 1.8 T, 2.0, 2.0 TFSI** 07/02 - 12/06 96 -147 kW	**46-189837**		-> CH.Nr.: 8E-7-400 000; Conditions see certificates VA: lowering (expertise): 20 mm; axle load to: 1150 kg HA: lowering (expertise): 20 mm; axle load to: 1100 kg

AUDI

AUDI A4 Convertible (8H7, 8HE)

B12 PK	**2.4, 2.5 TDI, 2.7 TDI, 3.0, 3.2 FSI** 04/02 - 12/06 120 -188 kW	**46-189820**		-> CH.Nr.: 8E-7-400 000; Conditions see certificates VA: lowering (expertise): 20 mm; axle load to: 1230 kg HA: lowering (expertise): 20 mm; axle load to: 1100 kg
B12 PK	**2.7 TDI, 3.2 FSI** 01/07 - 03/09 132 -188 kW	**46-188670**		CH.Nr.: 8E-7-400 001 ->; Conditions see certificates VA: lowering (expertise): 20 mm; axle load to: 1230 kg HA: lowering (expertise): 20 mm; axle load to: 1100 kg
B14	**1.8, 1.8 T, 1.8 T quattro, 2.0, 2.0 TDI, 2.0 TFSI, 2.0 TFSi quattro, 2.4, 2.5 TDI, 2.7 TDI, 3.0, 3.0 quattro, 3.0 TDI quattro, 3.2 FSI, 3.2 FSI quattro** 04/02 - 03/09 96 -188 kW	**47-169289**		Conditions see certificates VA: lowering (expertise): 30-60 mm; axle load to: 1250 kg HA: lowering (expertise): 20-50 mm; axle load to: 1170 kg
B14	**S4 quattro** 03/04 - 03/09 253 kW	*47-119444*		with standard chassis; Conditions see certificates VA: lowering (expertise): 15-30 mm; axle load to: 1250 kg HA: lowering (expertise): 10-30 mm; axle load to: 1170 kg
B14	**RS4 quattro** 06/06 - 03/09 309 kW	*47-119444*		disconect DRC; Conditions see certificates VA: lowering (expertise): 10-25 mm; axle load to: 1250 kg HA: lowering (expertise): 10-30 mm; axle load to: 1170 kg
B16 PSS9	**1.8, 1.8 T, 1.8 T quattro, 2.0, 2.0 TDI, 2.0 TFSI, 2.0 TFSi quattro, 2.4, 2.5 TDI, 2.7 TDI, 3.0, 3.0 quattro, 3.0 TDI quattro, 3.2 FSI, 3.2 FSI quattro** 04/02 - 03/09 96 -188 kW	**48-169301**		Conditions see certificates VA: lowering (expertise): 30-60 mm; axle load to: 1250 kg HA: lowering (expertise): 20-50 mm; axle load to: 1170 kg
B16 PSS9	**S4 quattro** 03/04 - 03/09 253 kW	**48-105958**		Conditions see certificates VA: lowering (expertise): 15-30 mm; axle load to: 1250 kg HA: lowering (expertise): 10-30 mm; axle load to: 1170 kg
B16 PSS9	**RS4 quattro** 06/06 - 03/09 309 kW	**48-105958**		disconect DRC; Conditions see certificates VA: lowering (expertise): 10-25 mm; axle load to: 1250 kg HA: lowering (expertise): 10-30 mm; axle load to: 1170 kg

AUDI A4 (8EC)

B1	**1.6, 1.8 T, 1.8 T quattro, 1.9 TDI, 2.0, 2.0 FSi, 2.0 GL, 2.0 TDI, 2.0 TDI 16V, 2.0 TDI quattro, 2.0 TFSI, 2.0 TFSI quattro, 2.5 TDI, 2.7 TDI, 3.0, 3.0 quattro, 3.0 TDI quattro, 3.2 FSI, 3.2 FSI quattro, RS4 quattro, S4 quattro** 11/04 - 06/08 75 -309 kW	**12-224463**	**12-224470**	VA: without ball bearing HA: without ball bearing
B3	**1.6** 11/04 - 06/08 75 kW	**37-147808**	**36-147885**	with standard chassis
B3	**1.6** 11/04 - 06/08 75 kW	**37-147839**	**36-147892**	with standard chassis; Heavy Duty Version .
B3	**1.6** 11/04 - 06/08 75 kW	**37-147921**	**36-148004**	with sports suspension
B3	**1.6** 11/04 - 06/08 75 kW	**37-147938**	**36-148011**	with sports suspension; Heavy Duty Version .
B3	**1.8 T, 2.0 GL** 11/04 - 06/08 110 -120 kW	**37-147839**	**36-147885**	with standard chassis; manual transmission
B3	**1.8 T, 2.0 GL** 11/04 - 06/08 110 -120 kW	**37-147846**	**36-147892**	with standard chassis; Heavy Duty Version .; manual transmission
B3	**1.8 T, 2.0 GL** 11/04 - 06/08 110 -120 kW	**37-147846**	**36-147885**	with standard chassis; automatic transmission
B3	**1.8 T, 2.0 GL** 11/04 - 06/08 110 -120 kW	**36-207275**	**36-147892**	with standard chassis; Heavy Duty Version .; automatic transmission
B3	**1.8 T, 2.0 FSi, 2.0 GL, 2.0 TFSI** 11/04 - 06/08 110 -162 kW	**37-147938**	**36-148004**	with sports suspension; manual transmission
B3	**1.8 T, 2.0 FSi, 2.0 GL, 2.0 TFSI** 11/04 - 06/08 110 -162 kW	**37-147945**	**36-148011**	with sports suspension; Heavy Duty Version .; manual transmission

AUDI				
AUDI A4 (8EC)				
B3	**1.8 T, 2.0 FSi, 2.0 GL, 2.0 TFSI** 11/04 - 06/08 110 -162 kW	**37-147945**	**36-148004**	with sports suspension; automatic transmission
B3	**1.8 T, 2.0 FSi, 2.0 GL, 2.0 TFSI** 11/04 - 06/08 110 -162 kW	**37-147952**	**36-148011**	with sports suspension; Heavy Duty Version .; automatic transmission
B3	**1.8 T quattro, 2.0 TDI quattro, 2.0 TFSI quattro** 11/04 - 06/08 103 -162 kW	**37-147839**	**36-147908**	with standard chassis; manual transmission
B3	**1.8 T quattro, 2.0 TDI quattro, 2.0 TFSI quattro** 11/04 - 06/08 103 -162 kW	**36-207275**	**36-147915**	with standard chassis; Heavy Duty Version .; manual transmission
B3	**1.8 T quattro, 2.0 TDI quattro, 2.0 TFSI quattro** 11/04 - 06/08 103 -162 kW	**36-207275**	**36-147908**	with standard chassis; automatic transmission
B3	**1.8 T quattro, 2.0 TDI quattro, 2.0 TFSI quattro** 11/04 - 06/08 103 -162 kW		**36-147915**	with standard chassis; Heavy Duty Version .; automatic transmission
B3	**1.8 T quattro, 2.0 TFSI quattro** 11/04 - 06/08 120 -162 kW	**37-147945**	**36-148004**	with sports suspension; manual transmission
B3	**1.8 T quattro, 2.0 TFSI quattro** 11/04 - 06/08 120 -162 kW	**37-147952**	**36-148011**	with sports suspension; Heavy Duty Version .; manual transmission
B3	**1.8 T quattro, 2.0 TFSI quattro** 11/04 - 06/08 120 -162 kW	**37-147952**	**36-148004**	with sports suspension; automatic transmission
B3	**1.8 T quattro, 2.0 TFSI quattro** 11/04 - 06/08 120 -162 kW	**37-147969**	**36-148011**	with sports suspension; Heavy Duty Version .; automatic transmission
B3	**2.0** 11/04 - 06/08 96 kW	**37-147808**	**36-147885**	with standard chassis; manual transmission
B3	**2.0** 11/04 - 06/08 96 kW	**37-147839**	**36-147892**	with standard chassis; Heavy Duty Version .; manual transmission
B3	**2.0** 11/04 - 06/08 96 kW	**37-147839**	**36-147885**	with standard chassis; automatic transmission
B3	**2.0** 11/04 - 06/08 96 kW	**37-147846**	**36-147892**	with standard chassis; Heavy Duty Version .; automatic transmission
B3	**2.0** 11/04 - 06/08 96 kW	**37-147921**	**36-148004**	with sports suspension; manual transmission
B3	**2.0** 11/04 - 06/08 96 kW	**37-147938**	**36-148011**	with sports suspension; Heavy Duty Version .; manual transmission
B3	**2.0** 11/04 - 06/08 96 kW	**37-147938**	**36-148004**	with sports suspension; automatic transmission
B3	**2.0** 11/04 - 06/08 96 kW	**37-147945**	**36-148011**	with sports suspension; Heavy Duty Version .; automatic transmission
B3	**2.0 FSi, 2.0 TDI, 2.0 TDI 16V, 2.0 TFSI** 06/05 - 06/08 89 -162 kW	**37-147846**	**36-147885**	with standard chassis; manual transmission
B3	**2.0 FSi, 2.0 TDI, 2.0 TFSI** 06/05 - 06/08 89 -162 kW	**36-207275**	**36-147892**	with standard chassis; Heavy Duty Version .; manual transmission
B3	**2.0 FSi, 2.0 TDI, 2.0 TDI 16V, 2.0 TFSI** 06/05 - 06/08 89 -162 kW	**36-207275**	**36-147885**	with standard chassis; automatic transmission
B3	**2.0 FSi, 2.0 TDI, 2.0 TDI 16V, 2.0 TFSI** 06/05 - 06/08 89 -162 kW		**36-147892**	with standard chassis; Heavy Duty Version .; automatic transmission
B3	**1.9 TDI** 11/04 - 06/08 85 kW	**37-147839**	**36-147885**	with standard chassis

AUDI

AUDI A4 (8EC)

B3	**1.9 TDI** 11/04 - 06/08 85 kW	**37-147846**	**36-147892**	with standard chassis; Heavy Duty Version .
B3	**1.9 TDI** 11/04 - 06/08 85 kW	**37-147952**	**36-148004**	with sports suspension
B3	**1.9 TDI** 11/04 - 06/08 85 kW	**37-147969**	**36-148011**	with sports suspension; Heavy Duty Version .
B3	**2.0 TDI, 2.0 TDI 16V** 11/04 - 06/08 89 -125 kW	**37-147952**	**36-148004**	with sports suspension; manual transmission
B3	**2.0 TDI, 2.0 TDI 16V** 11/04 - 06/08 89 -125 kW	**37-147969**	**36-148011**	with sports suspension; Heavy Duty Version .; manual transmission
B3	**2.0 TDI, 2.0 TDI 16V** 11/04 - 06/08 89 -125 kW	**37-147969**	**36-148004**	with sports suspension; automatic transmission
B3	**2.0 TDI, 2.0 TDI 16V** 11/04 - 06/08 89 -125 kW	**36-212613**	**36-148011**	with sports suspension; Heavy Duty Version .; automatic transmission
B3	**2.0 TDI quattro** 01/06 - 06/08 103 -125 kW	**37-147969**	**36-148004**	with sports suspension; manual transmission
B3	**2.0 TDI quattro** 01/06 - 06/08 103 -125 kW	**36-212613**	**36-148011**	with sports suspension; Heavy Duty Version .; manual transmission
B3	**2.0 TDI quattro, 3.2 FSI quattro** 01/05 - 06/08 103 -188 kW	**36-212613**	**36-148004**	with sports suspension; automatic transmission
B3	**2.0 TDI quattro, 3.2 FSI quattro** 01/05 - 06/08 103 -188 kW	**37-131388**	**36-148011**	with sports suspension; Heavy Duty Version .; automatic transmission
B3	**2.5 TDI, 2.7 TDI** 11/04 - 06/08 120 -132 kW	**36-207275**	**36-147885**	with standard chassis
B3	**2.5 TDI, 2.7 TDI** 11/04 - 06/08 120 -132 kW		**36-147892**	with standard chassis; Heavy Duty Version .
B3	**2.5 TDI, 2.7 TDI** 11/04 - 06/08 120 -132 kW	**36-212613**	**36-148004**	with sports suspension; manual transmission
B3	**2.5 TDI, 2.7 TDI** 11/04 - 06/08 120 -132 kW	**37-131388**	**36-148011**	with sports suspension; Heavy Duty Version .; manual transmission
B3	**2.5 TDI, 2.7 TDI, 3.2 FSI** 11/04 - 06/08 120 -188 kW	**37-131388**	**36-148004**	with sports suspension; automatic transmission
B3	**2.5 TDI, 2.7 TDI, 3.2 FSI** 11/04 - 06/08 120 -188 kW		**36-148011**	with sports suspension; Heavy Duty Version .; automatic transmission
B3	**3.0 TDI quattro, 3.2 FSI quattro** 11/04 - 06/08 150 -188 kW		**36-147908**	with standard chassis
B3	**3.0 TDI quattro, 3.2 FSI quattro** 11/04 - 06/08 150 -188 kW		**36-147915**	with standard chassis; Heavy Duty Version .
B3	**3.0 TDI quattro** 11/04 - 06/08 150 -171 kW	**36-191598**	**36-148004**	with sports suspension
B3	**3.0 TDI quattro** 11/04 - 06/08 150 -171 kW		**36-148011**	with sports suspension; Heavy Duty Version .
B4	**1.6, 1.8 T, 1.8 T quattro, 1.9 TDI, 2.0, 2.0 FSi, 2.0 GL, 2.0 TDI, 2.0 TDI 16V, 2.0 TDI quattro, 2.0 TFSI, 2.0 TFSI quattro, 2.5 TDI, 2.7 TDI, 3.0, 3.0 quattro, 3.0 TDI quattro, 3.2 FSI, 3.2 FSI quattro** 11/04 - 06/08 75 -188 kW	**19-158945**	**19-158952**	with standard chassis

AUDI				
AUDI A4 (8EC)				
B4	**1.6, 1.8 T, 1.8 T quattro, 1.9 TDI, 2.0, 2.0 FSi, 2.0 GL, 2.0 TDI, 2.0 TDI 16V, 2.0 TDI quattro, 2.0 TFSI, 2.0 TFSI quattro, 2.5 TDI, 2.7 TDI, 3.0, 3.0 quattro, 3.0 TDI quattro, 3.2 FSI, 3.2 FSI quattro, S4 quattro** 11/04 - 06/08 75 -253 kW	**19-164472** VA	**19-164489** HA	with sports suspension
B6 Sport	**1.6, 1.8 T, 1.8 T quattro, 1.9 TDI, 2.0, 2.0 FSi, 2.0 GL, 2.0 TDI, 2.0 TDI 16V, 2.0 TDI quattro, 2.0 TFSI, 2.0 TFSI quattro, 2.5 TDI, 2.7 TDI, 3.0, 3.0 quattro, 3.0 TDI quattro, 3.2 FSI, 3.2 FSI quattro** 11/04 - 06/08 75 -188 kW	**24-119788** VA	**24-119795** HA	
B8	**1.6, 1.8 T, 1.8 T quattro, 1.9 TDI, 2.0, 2.0 FSi, 2.0 GL, 2.0 TDI, 2.0 TDI 16V, 2.0 TDI quattro, 2.0 TFSI, 2.0 TFSI quattro, 2.5 TDI, 2.7 TDI, 3.0, 3.0 quattro, 3.0 TDI quattro, 3.2 FSI, 3.2 FSI quattro, S4 quattro** 11/04 - 06/08 75 -253 kW	**24-119818** VA	**24-119825** HA	
B8	**RS4 quattro** 09/05 - 06/08 309 kW	**24-119818** VA	**24-119825** HA	disconect DRC
B12 PK	**1.6, 1.8 T, 2.0, 2.0 FSi, 2.0 GL, 2.0 TFSI** 11/04 - 06/08 75 -162 kW	**46-188465**		Conditions see certificates VA: lowering (expertise): 30 mm; axle load to: 1090 kg HA: lowering (expertise): 30 mm; axle load to: 1035 kg
B12 PK	**1.8 T quattro, 2.0 TFSI quattro** 11/04 - 06/08 120 -162 kW	**46-188496**		Conditions see certificates VA: lowering (expertise): 30 mm; axle load to: 1090 kg HA: lowering (expertise): 30 mm; axle load to: 1130 kg
B12 PK	**1.8 T quattro, 2.0 TDI quattro, 2.0 TFSI quattro, 3.0 quattro, 3.2 FSI quattro** 11/04 - 06/08 103 -188 kW	**46-188502**		Conditions see certificates VA: lowering (expertise): 30 mm; axle load to: 1165 kg HA: lowering (expertise): 30 mm; axle load to: 1130 kg
B12 PK	**1.9 TDI, 2.0 TDI, 2.0 TDI 16V, 2.0 TFSI, 3.0, 3.2 FSI** 11/04 - 06/08 85 -188 kW	**46-188472**		Conditions see certificates VA: lowering (expertise): 30 mm; axle load to: 1165 kg HA: lowering (expertise): 30 mm; axle load to: 1035 kg
B12 PK	**2.5 TDI, 2.7 TDI** 11/04 - 06/08 120 -132 kW	**46-188519**		Conditions see certificates VA: lowering (expertise): 30 mm; axle load to: 1230 kg HA: lowering (expertise): 30 mm; axle load to: 1035 kg
B12 PK	**3.0 TDI quattro** 11/04 - 06/08 150 -171 kW	**46-188489**		Conditions see certificates VA: lowering (expertise): 30 mm; axle load to: 1230 kg HA: lowering (expertise): 30 mm; axle load to: 1130 kg
B12 SL	**1.6, 1.8 T, 2.0, 2.0 FSi, 2.0 GL, 2.0 TFSI** 11/04 - 06/08 75 -162 kW	**46-188588**		Conditions see certificates VA: lowering (expertise): 45-50 mm; axle load to: 1090 kg HA: lowering (expertise): 35-40 mm; axle load to: 1035 kg
B12 SL	**1.9 TDI, 2.0 TDI, 2.0 TFSI, 3.0, 3.2 FSI** 11/04 - 06/08 85 -188 kW	**46-188595**		Conditions see certificates VA: lowering (expertise): 45-50 mm; axle load to: 1140 kg HA: lowering (expertise): 35-40 mm; axle load to: 1035 kg
B14	**1.6, 1.8 T, 1.8 T quattro, 1.9 TDI, 2.0, 2.0 FSi, 2.0 GL, 2.0 TDI, 2.0 TDI 16V, 2.0 TDI quattro, 2.0 TFSI, 2.0 TFSI quattro, 2.5 TDI, 2.7 TDI, 3.0, 3.0 quattro, 3.0 TDI quattro, 3.2 FSI, 3.2 FSI quattro** 11/04 - 06/08 75 -188 kW	**47-169289**		Conditions see certificates VA: lowering (expertise): 30-60 mm; axle load to: 1250 kg HA: lowering (expertise): 20-50 mm; axle load to: 1170 kg
B14	**S4 quattro** 11/04 - 06/08 253 kW	*47-119444*		Conditions see certificates VA: lowering (expertise): 15-30 mm; axle load to: 1250 kg HA: lowering (expertise): 10-30 mm; axle load to: 1170 kg
B14	**RS4 quattro** 09/05 - 06/08 309 kW	*47-119444*		disconect DRC; Conditions see certificates VA: lowering (expertise): 15-30 mm; axle load to: 1250 kg HA: lowering (expertise): 10-30 mm; axle load to: 1170 kg

AUDI				
AUDI A4 (8EC)				
B16 PSS9	**1.6, 1.8 T, 1.8 T quattro, 1.9 TDI, 2.0, 2.0 FSi, 2.0 GL, 2.0 TDI, 2.0 TDI 16V, 2.0 TDI quattro, 2.0 TFSI, 2.0 TFSI quattro, 2.5 TDI, 2.7 TDI, 3.0, 3.0 quattro, 3.0 TDI quattro, 3.2 FSI, 3.2 FSI quattro** 11/04 - 06/08 75 -188 kW	**48-169301**		Conditions see certificates VA: lowering (expertise): 30-60 mm; axle load to: 1250 kg HA: lowering (expertise): 20-50 mm; axle load to: 1170 kg
B16 PSS9	**S4 quattro** 11/04 - 06/08 253 kW	**48-105958**		Conditions see certificates VA: lowering (expertise): 15-30 mm; axle load to: 1250 kg HA: lowering (expertise): 10-30 mm; axle load to: 1170 kg
B16 PSS9	**RS4 quattro** 09/05 - 06/08 309 kW	**48-105958**		disconect DRC; Conditions see certificates VA: lowering (expertise): 15-30 mm; axle load to: 1250 kg HA: lowering (expertise): 10-30 mm; axle load to: 1170 kg
AUDI A4 Avant (8ED)				
B1	**1.6, 1.8 T, 1.8 T quattro, 1.9 TDI, 2.0, 2.0 FSi, 2.0 TDI, 2.0 TDI 16V, 2.0 TDI quattro, 2.0 TFSI, 2.0 TFSI quattro, 2.5 TDI, 2.7 TDi, 3.0, 3.0 quattro, 3.0 TDI quattro, 3.2 FSI, 3.2 FSI quattro, RS4 quattro, S4 quattro** 11/04 - 06/08 75 -309 kW	**12-224463**	**12-224470**	VA: without ball bearing HA: without ball bearing
B3	**1.6** 11/04 - 06/08 75 kW	**37-147808**	**36-147908**	with standard chassis
B3	**1.6** 11/04 - 06/08 75 kW	**37-147839**	**36-147915**	with standard chassis; Heavy Duty Version .
B3	**1.6** 11/04 - 06/08 75 kW	**37-147921**	**36-148028**	with sports suspension
B3	**1.6** 11/04 - 06/08 75 kW	**37-147938**	**36-148264**	with sports suspension; Heavy Duty Version .
B3	**1.8 T** 11/04 - 06/08 120 kW	**37-147839**	**36-147908**	with standard chassis; manual transmission
B3	**1.8 T** 11/04 - 06/08 120 kW	**37-147846**	**36-147915**	with standard chassis; Heavy Duty Version .; manual transmission
B3	**1.8 T** 11/04 - 06/08 120 kW	**37-147846**	**36-147908**	with standard chassis; automatic transmission
B3	**1.8 T** 11/04 - 06/08 120 kW	**36-207275**	**36-147915**	with standard chassis; Heavy Duty Version .; automatic transmission
B3	**1.8 T, 2.0 FSi, 2.0 TFSI** 11/04 - 06/08 120 -162 kW	**37-147938**	**36-148028**	with sports suspension; manual transmission
B3	**1.8 T, 2.0 FSi, 2.0 TFSI** 11/04 - 06/08 120 -162 kW	**37-147945**	**36-148264**	with sports suspension; Heavy Duty Version .; manual transmission
B3	**1.8 T, 2.0 FSi, 2.0 TFSI** 11/04 - 06/08 120 -162 kW	**37-147945**	**36-148028**	with sports suspension; automatic transmission
B3	**1.8 T, 2.0 FSi, 2.0 TFSI** 11/04 - 06/08 120 -162 kW	**37-147952**	**36-148264**	with sports suspension; Heavy Duty Version .; automatic transmission
B3	**1.8 T quattro, 2.0 TDI quattro, 2.0 TFSI quattro** 11/04 - 06/08 103 -162 kW	**37-147846**	**36-147908**	with standard chassis; manual transmission
B3	**1.8 T quattro, 2.0 TDI quattro, 2.0 TFSI quattro** 11/04 - 06/08 103 -162 kW	**36-207275**	**36-147915**	with standard chassis; Heavy Duty Version .; manual transmission
B3	**1.8 T quattro, 2.0 TDI quattro, 2.0 TFSI quattro** 11/04 - 06/08 103 -162 kW	**36-207275**	**36-147908**	with standard chassis; automatic transmission

AUDI				
AUDI A4 Avant (8ED)				
B3	**1.8 T quattro, 2.0 TDI quattro, 2.0 TFSI quattro** 11/04 - 06/08 103 -162 kW		**36-147915**	with standard chassis; Heavy Duty Version .; automatic transmission
B3	**1.8 T quattro, 2.0 TFSI quattro** 11/04 - 06/08 120 -162 kW	**37-147945**	**36-148028**	with sports suspension; manual transmission
B3	**1.8 T quattro, 2.0 TFSI quattro** 11/04 - 06/08 120 -162 kW	**37-147952**	**36-148264**	with sports suspension; Heavy Duty Version .; manual transmission
B3	**1.8 T quattro, 2.0 TFSI quattro** 11/04 - 06/08 120 -162 kW	**37-147952**	**36-148028**	with sports suspension; automatic transmission
B3	**1.8 T quattro, 2.0 TFSI quattro** 11/04 - 06/08 120 -162 kW	**37-147969**	**36-148264**	with sports suspension; Heavy Duty Version .; automatic transmission
B3	**2.0** 11/04 - 06/08 96 kW	**37-147808**	**36-147908**	with standard chassis; manual transmission
B3	**2.0** 11/04 - 06/08 96 kW	**37-147839**	**36-147915**	with standard chassis; Heavy Duty Version .; manual transmission
B3	**2.0** 11/04 - 06/08 96 kW	**37-147839**	**36-147908**	with standard chassis; automatic transmission
B3	**2.0** 11/04 - 06/08 96 kW	**37-147846**	**36-147915**	with standard chassis; Heavy Duty Version .; automatic transmission
B3	**2.0** 11/04 - 06/08 96 kW	**37-147921**	**36-148028**	with sports suspension; manual transmission
B3	**2.0** 11/04 - 06/08 96 kW	**37-147938**	**36-148264**	with sports suspension; Heavy Duty Version .; manual transmission
B3	**2.0** 11/04 - 06/08 96 kW	**37-147938**	**36-148028**	with sports suspension; automatic transmission
B3	**2.0** 11/04 - 06/08 96 kW	**37-147945**	**36-148264**	with sports suspension; Heavy Duty Version .; automatic transmission
B3	**2.0 FSi, 2.0 TDI, 2.0 TDI 16V, 2.0 TFSI** 06/05 - 06/08 89 -162 kW	**37-147846**	**36-147908**	with standard chassis; manual transmission
B3	**2.0 FSi, 2.0 TDI, 2.0 TDI 16V, 2.0 TFSI** 06/05 - 06/08 89 -162 kW	**36-207275**	**36-147915**	with standard chassis; Heavy Duty Version .; manual transmission
B3	**2.0 FSi, 2.0 TDI, 2.0 TDI 16V, 2.0 TFSI** 06/05 - 06/08 89 -162 kW	**36-207275**	**36-147908**	with standard chassis; automatic transmission
B3	**2.0 FSi, 2.0 TDI, 2.0 TDI 16V, 2.0 TFSI** 06/05 - 06/08 89 -162 kW		**36-147915**	with standard chassis; Heavy Duty Version .; automatic transmission
B3	**1.9 TDI** 11/04 - 06/08 85 kW	**37-147839**	**36-147908**	with standard chassis
B3	**1.9 TDI** 11/04 - 06/08 85 kW	**37-147846**	**36-147915**	with standard chassis; Heavy Duty Version .
B3	**1.9 TDI** 11/04 - 06/08 85 kW	**37-147952**	**36-148028**	with sports suspension
B3	**1.9 TDI** 11/04 - 06/08 85 kW	**37-147969**	**36-148264**	with sports suspension; Heavy Duty Version .
B3	**2.0 TDI, 2.0 TDI 16V** 11/04 - 06/08 89 -125 kW	**37-147952**	**36-148028**	with sports suspension; manual transmission
B3	**2.0 TDI, 2.0 TDI 16V** 11/04 - 06/08 89 -125 kW	**37-147969**	**36-148264**	with sports suspension; Heavy Duty Version .; manual transmission

AUDI

AUDI A4 Avant (8ED)

B3	**2.0 TDI, 2.0 TDI 16V** 11/04 - 06/08 89 -125 kW	**37-147969**	**36-148028**	with sports suspension; automatic transmission
B3	**2.0 TDI, 2.0 TDI 16V** 11/04 - 06/08 89 -125 kW	**36-212613**	**36-148264**	with sports suspension; Heavy Duty Version .; automatic transmission
B3	**2.0 TDI quattro** 01/06 - 06/08 103 -125 kW	**37-147969**	**36-148028**	with sports suspension; manual transmission
B3	**2.0 TDI quattro** 01/06 - 06/08 103 -125 kW	**36-212613**	**36-148264**	with sports suspension; Heavy Duty Version .; manual transmission
B3	**2.0 TDI quattro, 3.2 FSI quattro** 01/05 - 06/08 103 -188 kW	**36-212613**	**36-148028**	with sports suspension; automatic transmission
B3	**2.0 TDI quattro, 3.2 FSI quattro** 01/05 - 06/08 103 -188 kW	**37-131388**	**36-148264**	with sports suspension; Heavy Duty Version .; automatic transmission
B3	**2.5 TDI, 2.7 TDi** 11/04 - 06/08 120 -132 kW		**36-147908**	with standard chassis
B3	**2.5 TDI, 2.7 TDi** 11/04 - 06/08 120 -132 kW		**36-147915**	with standard chassis; Heavy Duty Version .
B3	**2.5 TDI, 2.7 TDi** 11/04 - 06/08 120 -132 kW	**36-212613**	**36-148028**	with sports suspension; manual transmission
B3	**2.5 TDI, 2.7 TDi** 11/04 - 06/08 120 -132 kW	**37-131388**	**36-148264**	with sports suspension; Heavy Duty Version .; manual transmission
B3	**2.5 TDI, 2.7 TDi, 3.2 FSI** 11/04 - 06/08 120 -188 kW	**36-207275**	**36-148028**	with sports suspension; automatic transmission
B3	**2.5 TDI, 2.7 TDi, 3.2 FSI** 11/04 - 06/08 120 -188 kW		**36-148264**	with sports suspension; Heavy Duty Version .; automatic transmission
B3	**3.0 TDI quattro** 11/04 - 06/08 150 -171 kW	**36-191598**	**36-148028**	with sports suspension
B3	**3.0 TDI quattro** 11/04 - 06/08 150 -171 kW		**36-148264**	with sports suspension; Heavy Duty Version .
B4	**1.6, 1.8 T, 1.8 T quattro, 1.9 TDI, 2.0, 2.0 FSi, 2.0 TDI, 2.0 TDI 16V, 2.0 TDI quattro, 2.0 TFSI, 2.0 TFSI quattro, 2.5 TDI, 2.7 TDi, 3.0, 3.0 quattro, 3.0 TDI quattro, 3.2 FSI, 3.2 FSI quattro** 11/04 - 06/08 75 -188 kW	**19-158945** HA	**19-158952** VA	with standard chassis
B6 Sport	**1.6, 1.8 T, 1.8 T quattro, 1.9 TDI, 2.0, 2.0 FSi, 2.0 TDI, 2.0 TDI 16V, 2.0 TDI quattro, 2.0 TFSI, 2.0 TFSI quattro, 2.5 TDI, 2.7 TDi, 3.0, 3.0 quattro, 3.0 TDI quattro, 3.2 FSI, 3.2 FSI quattro** 11/04 - 06/08 75 -188 kW	**24-119788** HA	**24-119795** VA	
B8	**1.6, 1.8 T, 1.8 T quattro, 1.9 TDI, 2.0, 2.0 FSi, 2.0 TDI, 2.0 TDI 16V, 2.0 TDI quattro, 2.0 TFSI, 2.0 TFSI quattro, 2.5 TDI, 2.7 TDi, 3.0, 3.0 quattro, 3.0 TDI quattro, 3.2 FSI, 3.2 FSI quattro, S4 quattro** 11/04 - 06/08 75 -253 kW	**24-119818** HA	**24-119825** VA	
B8	**RS4 quattro** 09/05 - 06/08 309 kW	**24-119818** HA	**24-119825** VA	disconect DRC
B12 PK	**1.6, 1.8 T, 2.0, 2.0 FSi, 2.0 TFSI** 11/04 - 06/08 75 -162 kW	**46-188526**		Conditions see certificates VA: lowering (expertise): 30 mm; axle load to: 1090 kg HA: lowering (expertise): 30 mm; axle load to: 1130 kg

AUDI

AUDI A4 Avant (8ED)

B12 PK	**1.8 T quattro, 2.0 TFSI quattro** 11/04 - 06/08 120 -162 kW	**46-188564**		Conditions see certificates VA: lowering (expertise): 30 mm; axle load to: 1090 kg HA: lowering (expertise): 30 mm; axle load to: 1150 kg
B12 PK	**1.8 T quattro, 2.0 TDI quattro, 2.0 TFSI quattro, 3.0 quattro, 3.2 FSI quattro** 11/04 - 06/08 103 -188 kW	**46-188571**		Conditions see certificates VA: lowering (expertise): 30 mm; axle load to: 1165 kg HA: lowering (expertise): 30 mm; axle load to: 1150 kg
B12 PK	**1.9 TDI, 2.0 TDI, 2.0 TDI 16V, 2.0 TFSI, 3.0, 3.2 FSI** 11/04 - 06/08 85 -188 kW	**46-188533**		Conditions see certificates VA: lowering (expertise): 30 mm; axle load to: 1165 kg HA: lowering (expertise): 30 mm; axle load to: 1130 kg
B12 PK	**2.5 TDI, 2.7 TDi** 11/04 - 06/08 120 -132 kW	**46-188540**		Conditions see certificates VA: lowering (expertise): 30 mm; axle load to: 1230 kg HA: lowering (expertise): 30 mm; axle load to: 1130 kg
B12 PK	**3.0 TDI quattro** 11/04 - 06/08 150 -171 kW	**46-188557**		Conditions see certificates VA: lowering (expertise): 30 mm; axle load to: 1230 kg HA: lowering (expertise): 30 mm; axle load to: 1150 kg
B12 SL	**1.6, 1.8 T, 2.0, 2.0 FSi, 2.0 TFSI** 11/04 - 06/08 75 -162 kW	**46-188601**		Conditions see certificates VA: lowering (expertise): 45-50 mm; axle load to: 1090 kg HA: lowering (expertise): 35-40 mm; axle load to: 1090 kg
B12 SL	**1.9 TDI, 2.0 TDI, 2.0 TDI 16V, 2.0 TFSI, 3.0, 3.2 FSI** 11/04 - 06/08 85 -188 kW	**46-188618**		Conditions see certificates VA: lowering (expertise): 45-50 mm; axle load to: 1140 kg HA: lowering (expertise): 35-40 mm; axle load to: 1090 kg
B14	**1.6, 1.8 T, 1.8 T quattro, 1.9 TDI, 2.0, 2.0 FSi, 2.0 TDI, 2.0 TDI 16V, 2.0 TDI quattro, 2.0 TFSI, 2.0 TFSI quattro, 2.5 TDI, 2.7 TDi, 3.0, 3.0 quattro, 3.0 TDI quattro, 3.2 FSI, 3.2 FSI quattro** 11/04 - 06/08 75 -188 kW	**47-169289**		Conditions see certificates VA: lowering (expertise): 30-60 mm; axle load to: 1250 kg HA: lowering (expertise): 20-50 mm; axle load to: 1170 kg
B14	**S4 quattro** 11/04 - 06/08 253 kW	*47-119444*		Conditions see certificates VA: lowering (expertise): 10-25 mm; axle load to: 1250 kg HA: lowering (expertise): 10-30 mm; axle load to: 1170 kg
B14	**RS4 quattro** 09/05 - 06/08 309 kW	*47-119444*		disconect DRC; Conditions see certificates VA: lowering (expertise): 10-25 mm; axle load to: 1250 kg HA: lowering (expertise): 10-25 mm; axle load to: 1170 kg
B16 PSS9	**1.6, 1.8 T, 1.8 T quattro, 1.9 TDI, 2.0, 2.0 FSi, 2.0 TDI, 2.0 TDI 16V, 2.0 TDI quattro, 2.0 TFSI, 2.0 TFSI quattro, 2.5 TDI, 2.7 TDi, 3.0, 3.0 quattro, 3.0 TDI quattro, 3.2 FSI, 3.2 FSI quattro** 11/04 - 06/08 75 -188 kW	**48-169301**		Conditions see certificates VA: lowering (expertise): 30-60 mm; axle load to: 1250 kg HA: lowering (expertise): 20-50 mm; axle load to: 1170 kg
B16 PSS9	**S4 quattro** 11/04 - 06/08 253 kW	**48-105958**		Conditions see certificates VA: lowering (expertise): 10-25 mm; axle load to: 1250 kg HA: lowering (expertise): 10-30 mm; axle load to: 1170 kg
B16 PSS9	**RS4 quattro** 09/05 - 06/08 309 kW	**48-105958**		disconect DRC; Conditions see certificates VA: lowering (expertise): 10-25 mm; axle load to: 1250 kg HA: lowering (expertise): 10-25 mm; axle load to: 1170 kg

AUDI A4 (8K2)

B4	**1.8 TFSI, 1.8 TFSI quattro, 2.0 TDi, 2.0 TDI quattro, 2.0 TFSi, 2.0 TFSI flexible fuel, 2.0 TFSI flexible fuel quattro, 2.0 TFSi quattro, 2.7 TDI, 3.0 TDI, 3.0 TDI quattro, 3.0 TFSI quattro, 3.2 FSI, 3.2 FSI quattro** 11/07 - 88 -200 kW	**19-171593**	**19-171609**	with standard chassis; without electronic suspension control
B4	**1.8 TFSI, 1.8 TFSI quattro, 2.0 TDi, 2.0 TDI quattro, 2.0 TFSi, 2.0 TFSI flexible fuel, 2.0 TFSI flexible fuel quattro, 2.0 TFSi quattro, 2.7 TDI, 3.0 TDI, 3.0 TDI quattro, 3.0 TFSI quattro, 3.2 FSI, 3.2 FSI quattro** 11/07 - 88 -200 kW	**19-171616**	**19-171623**	with sports suspension; without electronic suspension control

AUDI			
AUDI A4 (8K2)			
B6 Sport **1.8 TFSI, 1.8 TFSI quattro, 2.0 TDi, 2.0 TDi quattro, 2.0 TFSi, 2.0 TFSI flexible fuel, 2.0 TFSI flexible fuel quattro, 2.0 TFSi quattro, 2.7 TDI, 3.0 TDI, 3.0 TDI quattro, 3.0 TFSI quattro, 3.2 FSI, 3.2 FSI quattro** 11/07 - 88 -200 kW	**24-145961** VL	**24-145978** HL	without electronic suspension control
B8 **1.8 TFSI, 1.8 TFSI quattro, 2.0 TDi, 2.0 TDi quattro, 2.0 TFSi, 2.0 TFSI flexible fuel, 2.0 TFSI flexible fuel quattro, 2.0 TFSi quattro, 2.7 TDI, 3.0 TDI, 3.0 TDI quattro, 3.0 TFSI quattro, 3.2 FSI, 3.2 FSI quattro, S4 quattro, 1.8 FSi, 1.8 TFSI, 1.8 TFSI quattro, 2.0 TDI, 2.0 TDI quattro, 2.0 TFSI, 2.0 TFSI flexible fuel, 2.0 TFSI flexible fuel quattro, 2.0 TFSI quattro, 2.7 TDI, 3.0 TDI, 3.0 TDI quattro, 3.0 TFSI quattro, 3.2 FSI, 3.2 FSI quattro, S4 quattro** 11/07 - 88 -245 kW	**24-145985** VL	**24-145992** HL	with sports suspension; without electronic suspension control
B12 PK **1.8 TFSI, 1.8 TFSI quattro, 2.0 TDi, 2.0 TDI quattro, 2.0 TFSi, 2.0 TFSI flexible fuel, 2.0 TFSI flexible fuel quattro, 2.0 TFSi quattro, 3.0 TFSI quattro, 3.2 FSI, 3.2 FSI quattro** 11/07 - 88 -200 kW	**46-183323**		with standard chassis; without lowered chassis; without electronic suspension control; Conditions see certificates VA: lowering (expertise): 35 mm; axle load to: 1105 kg HA: without ride height adjustment; lowering (expertise): 30 mm; axle load to: 1160 kg
B12 PK **2.7 TDI, 3.0 TDI, 3.0 TDI quattro, 3.0 TFSI quattro, 3.2 FSI, 3.2 FSI quattro, S4 quattro** 11/07 - 120 -245 kW	**46-183330**		with standard chassis; without lowered chassis; without electronic suspension control; Conditions see certificates VA: lowering (expertise): 35 mm; axle load to: 1215 kg HA: without ride height adjustment; lowering (expertise): 30 mm; axle load to: 1160 kg
B12 SL **1.8 TFSI, 1.8 TFSI quattro, 2.0 TDi, 2.0 TDI quattro, 2.0 TFSi, 2.0 TFSI flexible fuel, 2.0 TFSI flexible fuel quattro, 2.0 TFSi quattro, 3.0 TFSI quattro, 3.2 FSI, 3.2 FSI quattro** 11/07 - 88 -200 kW	**46-183521**		with standard chassis; without lowered chassis; without electronic suspension control; Conditions see certificates VA: lowering (expertise): 45 mm; axle load to: 1105 kg HA: without ride height adjustment; lowering (expertise): 35 mm; axle load to: 1155 kg
B16 PSS10 **1.8 TFSI, 1.8 TFSI quattro, 2.0 TDi, 2.0 TDi quattro, 2.0 TFSi, 2.0 TFSI flexible fuel, 2.0 TFSI flexible fuel quattro, 2.0 TFSi quattro, 2.7 TDI, 3.0 TDI, 3.0 TDI quattro, 3.0 TFSI quattro, 3.2 FSI, 3.2 FSI quattro, S4 quattro** 11/07 - 88 -245 kW	**48-147231**		without electronic suspension control; Conditions see certificates VA: lowering (expertise): 30-50 mm; axle load to: 1245 kg HA: lowering (expertise): 30-50 mm; axle load to: 1215 kg
B16 RC **1.8 TFSI, 1.8 TFSI quattro, 2.0 TDi, 2.0 TDI quattro, 2.0 TFSi, 2.0 TFSI flexible fuel, 2.0 TFSI flexible fuel quattro, 2.0 TFSi quattro, 2.7 TDI, 3.0 TDI, 3.0 TDI quattro, 3.0 TFSI quattro, 3.2 FSI, 3.2 FSI quattro, S4 quattro** 11/07 - 88 -245 kW	**49-151282**		without electronic suspension control; Conditions see certificates VA: lowering (expertise): 30-50 mm; axle load to: 1245 kg HA: lowering (expertise): 30-50 mm; axle load to: 1215 kg

AUDI				
AUDI A4 Avant (8K5)				
B4	**1.8 FSi, 1.8 TFSI, 1.8 TFSI quattro, 2.0 TDI, 2.0 TDI quattro, 2.0 TFSI, 2.0 TFSI flexible fuel, 2.0 TFSI flexible fuel quattro, 2.0 TFSI quattro, 2.7 TDi, 3.0 TDI, 3.0 TDI quattro, 3.0 TFSI quattro, 3.2 FSI, 3.2 FSI quattro** 04/08 - 88 -200 kW	**19-171593**	**19-171609**	with standard chassis; without electronic suspension control
B4	**1.8 FSi, 1.8 TFSI, 1.8 TFSI quattro, 2.0 TDI, 2.0 TDI quattro, 2.0 TFSI, 2.0 TFSI flexible fuel, 2.0 TFSI flexible fuel quattro, 2.0 TFSI quattro, 2.7 TDi, 3.0 TDI, 3.0 TDI quattro, 3.0 TFSI quattro, 3.2 FSI, 3.2 FSI quattro** 04/08 - 88 -200 kW	**19-171616**	**19-171623**	with sports suspension; without electronic suspension control
B6 Sport	**1.8 FSi, 1.8 TFSI, 1.8 TFSI quattro, 2.0 TDI, 2.0 TDI quattro, 2.0 TFSI, 2.0 TFSI flexible fuel, 2.0 TFSI flexible fuel quattro, 2.0 TFSI quattro, 2.7 TDi, 3.0 TDI, 3.0 TDI quattro, 3.0 TFSI quattro, 3.2 FSI, 3.2 FSI quattro** 04/08 - 88 -200 kW	**24-145961**	**24-145978**	without electronic suspension control
B12 PK	**1.8 FSi, 1.8 TFSI, 2.0 TDI, 2.0 TFSI, 2.0 TFSI flexible fuel** 04/08 - 88 -155 kW	**46-183323**		with standard chassis; without lowered chassis; without electronic suspension control; Conditions see certificates VA: lowering (expertise): 35 mm; axle load to: 1105 kg HA: without ride height adjustment; lowering (expertise): 30 mm; axle load to: 1160 kg
B12 PK	**1.8 TFSI quattro, 2.0 TDI quattro, 2.0 TFSI flexible fuel quattro, 2.0 TFSI quattro, 3.0 TFSI quattro, 3.2 FSI quattro** 04/08 - 105 -200 kW	**46-183354**		with standard chassis; without lowered chassis; without electronic suspension control; Conditions see certificates VA: lowering (expertise): 30 mm; axle load to: 1105 kg HA: without ride height adjustment; lowering (expertise): 30 mm; axle load to: 1225 kg
B12 PK	**2.7 TDi, 3.0 TDI, 3.2 FSI** 04/08 - 120 -195 kW	**46-183330**		with standard chassis; without lowered chassis; without electronic suspension control; Conditions see certificates VA: lowering (expertise): 35 mm; axle load to: 1215 kg HA: without ride height adjustment; lowering (expertise): 30 mm; axle load to: 1160 kg
B12 PK	**3.0 TDI quattro, 3.0 TFSI quattro, 3.2 FSI quattro, S4 quattro** 04/08 - 155 -245 kW	**46-183347**		with standard chassis; without lowered chassis; without electronic suspension control; Conditions see certificates VA: lowering (expertise): 30 mm; axle load to: 1215 kg HA: without ride height adjustment; lowering (expertise): 30 mm; axle load to: 1225 kg
B12 SL	**1.8 FSi, 1.8 TFSI, 2.0 TDI, 2.0 TFSI, 2.0 TFSI flexible fuel** 04/08 - 88 -155 kW	**46-183521**		with standard chassis; without lowered chassis; without electronic suspension control; Conditions see certificates VA: lowering (expertise): 45 mm; axle load to: 1105 kg HA: without ride height adjustment; lowering (expertise): 35 mm; axle load to: 1155 kg
B16 PSS10	**1.8 FSi, 1.8 TFSI, 1.8 TFSI quattro, 2.0 TDI, 2.0 TDI quattro, 2.0 TFSI, 2.0 TFSI flexible fuel, 2.0 TFSI flexible fuel quattro, 2.0 TFSI quattro, 2.7 TDi, 3.0 TDI, 3.0 TDI quattro, 3.0 TFSI quattro, 3.2 FSI, 3.2 FSI quattro, S4 quattro** 04/08 - 88 -245 kW	**48-147231**		without electronic suspension control; Conditions see certificates VA: lowering (expertise): 30-50 mm; axle load to: 1245 kg HA: lowering (expertise): 30-50 mm; axle load to: 1215 kg
B16 RC	**1.8 FSi, 1.8 TFSI, 1.8 TFSI quattro, 2.0 TDI, 2.0 TDI quattro, 2.0 TFSI, 2.0 TFSI flexible fuel, 2.0 TFSI flexible fuel quattro, 2.0 TFSI quattro, 2.7 TDi, 3.0 TDI, 3.0 TDI quattro, 3.0 TFSI quattro, 3.2 FSI, 3.2 FSI quattro, S4 quattro** 04/08 - 88 -245 kW	**49-151282**		without electronic suspension control; Conditions see certificates VA: lowering (expertise): 30-50 mm; axle load to: 1245 kg HA: lowering (expertise): 30-50 mm; axle load to: 1215 kg

AUDI				
AUDI A5 (8T)				
B4	**1.8 TFSI, 2.0 TDI, 2.0 TDI quattro, 2.0 TFSI, 2.0 TFSI quattro, 2.7 TDI, 3.0 TDI, 3.0 TDI quattro, 3.0 TFSI quattro, 3.2 FSI, 3.2 FSI quattro** 06/07 - 118 -200 kW	**19-171593**	**19-171609**	with standard chassis; without electronic suspension control
B4	**1.8 TFSI, 2.0 TDI, 2.0 TDI quattro, 2.0 TFSI, 2.0 TFSI quattro, 2.7 TDI, 3.0 TDI, 3.0 TDI quattro, 3.0 TFSI quattro, 3.2 FSI, 3.2 FSI quattro** 06/07 - 118 -200 kW	**19-171616**	**19-171623**	with sports suspension; without electronic suspension control; mark: 1BV
B6 Sport	**1.8 TFSI, 2.0 TDI, 2.0 TDI quattro, 2.0 TFSI, 2.0 TFSI quattro, 2.7 TDI, 3.0 TDI, 3.0 TDI quattro, 3.0 TFSI quattro, 3.2 FSI, 3.2 FSI quattro, S5 quattro** 06/07 - 118 -260 kW	**24-145961**	**24-145978**	without electronic suspension control
B8	**1.8 TFSI, 2.0 TDI, 2.0 TDI quattro, 2.0 TFSI, 2.0 TFSI quattro, 2.7 TDI, 3.0 TDI, 3.0 TDI quattro, 3.0 TFSI quattro, 3.2 FSI, 3.2 FSI quattro, RS 5 quattro, S5 quattro** 06/07 - 118 -331 kW	**24-145985**	**24-145992**	with sports suspension; without electronic suspension control
B12 PK	**1.8 TFSI, 2.0 TDI, 2.0 TDI quattro, 2.0 TFSI, 2.0 TFSI quattro, 3.2 FSI** 06/07 - 118 -195 kW	**46-189738**		without electronic suspension control; Conditions see certificates VA: lowering (expertise): 20-25 mm; axle load to: 1120 kg HA: lowering (expertise): 15-20 mm; axle load to: 1095 kg
B12 PK	**2.7 TDI, 3.0 TDI, 3.0 TDI quattro, 3.0 TFSI quattro, 3.2 FSI quattro, RS 5 quattro, S5 quattro** 06/07 - 120 -331 kW	**46-189721**		without electronic suspension control; Conditions see certificates VA: lowering (expertise): 25 mm; axle load to: 1205 kg HA: lowering (expertise): 20 mm; axle load to: 1095 kg
B16 PSS10	**1.8 TFSI, 2.0 TDI, 2.0 TDI quattro, 2.0 TFSI, 2.0 TFSI quattro, 2.7 TDI, 3.0 TDI, 3.0 TDI quattro, 3.0 TFSI quattro, 3.2 FSI, 3.2 FSI quattro** 06/07 - 118 -200 kW	**48-147231**		without electronic suspension control; Conditions see certificates VA: lowering (expertise): 30-50 mm; axle load to: 1245 kg HA: lowering (expertise): 30-50 mm; axle load to: 1215 kg
B16 PSS10	**RS 5 quattro, S5 quattro** 06/07 - 245 -331 kW	**48-147231**		without electronic suspension control; Conditions see certificates VA: lowering (expertise): 10-30 mm; axle load to: 1215 kg HA: lowering (expertise): 10-30 mm; axle load to: 1215 kg
B16 RC	**1.8 TFSI, 2.0 TDI, 2.0 TDI quattro, 2.0 TFSI, 2.0 TFSI quattro, 2.7 TDI, 3.0 TDI, 3.0 TDI quattro, 3.0 TFSI quattro, 3.2 FSI, 3.2 FSI quattro** 06/07 - 118 -200 kW	**49-151282**		without electronic suspension control; Conditions see certificates VA: lowering (expertise): 30-50 mm; axle load to: 1245 kg HA: lowering (expertise): 30-50 mm; axle load to: 1215 kg
B16 RC	**RS 5 quattro, S5 quattro** 06/07 - 245 -331 kW	**49-151282**		without electronic suspension control; Conditions see certificates VA: lowering (expertise): 15-35 mm; axle load to: 1215 kg HA: lowering (expertise): 15-35 mm; axle load to: 1215 kg
AUDI A5 Sportback				
B4	**1.8 TFSI, 2.0 TDI, 2.0 TDI quattro, 2.0 TFSI, 2.0 TFSI quattro, 2.7 TDI, 3.0 TDI, 3.0 TDI quattro, 3.0 TFSI quattro, 3.2 FSI quattro** 09/09 - 100 -200 kW	**19-171593**	**19-171609**	with standard chassis; without electronic suspension control
B4	**1.8 TFSI, 2.0 TDI, 2.0 TDI quattro, 2.0 TFSI, 2.0 TFSI quattro, 2.7 TDI, 3.0 TDI, 3.0 TDI quattro, 3.0 TFSI quattro, 3.2 FSI quattro** 09/09 - 100 -200 kW	**19-171616**	**19-171623**	with sports suspension; without electronic suspension control; mark: 1BV

AUDI				
AUDI A5 Sportback				
B6 Sport	**1.8 TFSI, 2.0 TDI, 2.0 TDI quattro, 2.0 TFSI, 2.0 TFSI quattro, 2.7 TDI, 3.0 TDI, 3.0 TDI quattro, 3.0 TFSI quattro, 3.2 FSI quattro** 09/09 - 100 -200 kW	**24-145961**	**24-145978**	without electronic suspension control
B6 Sport	**S5 quattro** 01/10 - 245 kW	**24-145961**	**24-145978**	without electronic suspension control
B8	**1.8 TFSI, 2.0 TDI, 2.0 TDI quattro, 2.0 TFSI, 2.0 TFSI quattro, 2.7 TDI, 3.0 TDI, 3.0 TDI quattro, 3.0 TFSI quattro, 3.2 FSI quattro** 09/09 - 100 -200 kW	**24-145985**	**24-145992**	with sports suspension; without electronic suspension control
B8	**S5 quattro** 01/10 - 245 kW	**24-145985**	**24-145992**	with sports suspension; without electronic suspension control
B12 PK	**1.8 TFSI, 2.0 TDI, 2.0 TDI quattro, 2.0 TFSI, 2.0 TFSI quattro** 09/09 - 100 -155 kW	**46-189783**		without electronic suspension control; Conditions see certificates VA: lowering (expertise): 25 mm; axle load to: 1120 kg HA: lowering (expertise): 25 mm; axle load to: 1155 kg
B12 PK	**2.7 TDI, 3.0 TDI, 3.0 TDI quattro, 3.0 TFSI quattro, 3.2 FSI quattro, S5 quattro** 09/09 - 120 -245 kW	**46-189790**		without electronic suspension control; Conditions see certificates VA: lowering (expertise): 25 mm; axle load to: 1205 kg HA: lowering (expertise): 25 mm; axle load to: 1155 kg
B16 PSS10	**1.8 TFSI, 2.0 TDI, 2.0 TDI quattro, 2.0 TFSI, 2.0 TFSI quattro, 2.7 TDI, 3.0 TDI, 3.0 TDI quattro, 3.0 TFSI quattro, 3.2 FSI quattro** 09/09 - 100 -200 kW	**48-147231**		without electronic suspension control; Conditions see certificates VA: lowering (expertise): 20-45 mm; axle load to: 1245 kg HA: lowering (expertise): 30-40 mm; axle load to: 1215 kg
B16 PSS10	**S5 quattro** 01/10 - 245 kW	**48-147231**		without electronic suspension control; Conditions see certificates VA: lowering (expertise): 10-30 mm; axle load to: 1215 kg HA: lowering (expertise): 10-30 mm; axle load to: 1215 kg
B16 RC	**1.8 TFSI, 2.0 TDI, 2.0 TDI quattro, 2.0 TFSI, 2.0 TFSI quattro, 2.7 TDI, 3.0 TDI, 3.0 TDI quattro, 3.0 TFSI quattro, 3.2 FSI quattro** 09/09 - 100 -200 kW	**49-151282**		without electronic suspension control; Conditions see certificates VA: lowering (expertise): 20-45 mm; axle load to: 1245 kg HA: lowering (expertise): 30-40 mm; axle load to: 1215 kg
B16 RC	**S5 quattro** 01/10 - 245 kW	**49-151282**		without electronic suspension control; Conditions see certificates VA: lowering (expertise): 15-35 mm; axle load to: 1215 kg HA: lowering (expertise): 15-35 mm; axle load to: 1215 kg
AUDI A5 Convertible (8F)				
B4	**1.8 TFSI, 2.0 TDI, 2.0 TDI quattro, 2.0 TFSI, 2.0 TFSI quattro, 2.7 TDI, 3.0 TDI, 3.0 TDI quattro, 3.0 TFSI quattro, 3.2 FSI, 3.2 FSI quattro** 03/09 - 105 -200 kW	**19-171593**	**19-171609**	with standard chassis; without electronic suspension control
B4	**1.8 TFSI, 2.0 TDI, 2.0 TDI quattro, 2.0 TFSI, 2.0 TFSI quattro, 2.7 TDI, 3.0 TDI, 3.0 TDI quattro, 3.0 TFSI quattro, 3.2 FSI, 3.2 FSI quattro** 03/09 - 105 -200 kW	**19-171616**	**19-171623**	with sports suspension; without electronic suspension control; mark: 1BV
B6 Sport	**1.8 TFSI, 2.0 TDI, 2.0 TDI quattro, 2.0 TFSI, 2.0 TFSI quattro, 2.7 TDI, 3.0 TDI, 3.0 TDI quattro, 3.0 TFSI quattro, 3.2 FSI, 3.2 FSI quattro, S5 quattro** 06/09 - 105 -245 kW	**24-145961**	**24-145978**	without electronic suspension control

AUDI				
AUDI A5 Convertible (8F)				
B8	**1.8 TFSI, 2.0 TDI, 2.0 TDI quattro, 2.0 TFSI, 2.0 TFSI quattro, 2.7 TDI, 3.0 TDI, 3.0 TDI quattro, 3.0 TFSI quattro, 3.2 FSI, 3.2 FSI quattro, S5 quattro** 06/09 - 105 -245 kW	**24-145985**	**24-145992**	with sports suspension; without electronic suspension control
B12 PK	**1.8 TFSI, 2.0 TDI, 2.0 TFSI** 03/09 - 105 -155 kW	**46-189745**		without electronic suspension control; Conditions see certificates VA: lowering (expertise): 20-25 mm; axle load to: 1120 kg HA: lowering (expertise): 15 mm; axle load to: 1240 kg
B12 PK	**2.0 TFSI quattro, 3.0 TFSI quattro, 3.2 FSI quattro** 03/09 - 155 -200 kW	**46-189769**		without electronic suspension control; Conditions see certificates VA: lowering (expertise): 20-25 mm; axle load to: 1205 kg HA: lowering (expertise): 20 mm; axle load to: 1240 kg
B12 PK	**2.7 TDI, 3.0 TDI, 3.2 FSI** 03/09 - 120 -195 kW	**46-189752**		without electronic suspension control; Conditions see certificates VA: lowering (expertise): 20-25 mm; axle load to: 1205 kg HA: lowering (expertise): 15 mm; axle load to: 1240 kg
B12 PK	**3.0 TDI quattro, S5 quattro** 03/09 - 176 -245 kW	**46-189776**		without electronic suspension control; Conditions see certificates VA: lowering (expertise): 25 mm; axle load to: 1245 kg HA: lowering (expertise): 15 mm; axle load to: 1240 kg
B16 PSS10	**1.8 TFSI, 2.0 TDI, 2.0 TDI quattro, 2.0 TFSI, 2.0 TFSI quattro, 2.7 TDI, 3.0 TDI, 3.0 TDI quattro, 3.0 TFSI quattro, 3.2 FSI, 3.2 FSI quattro, S5 quattro** 06/09 - 105 -245 kW	**48-147231**		without electronic suspension control; Conditions see certificates VA: lowering (expertise): 30-50 mm; axle load to: 1245 kg HA: lowering (expertise): 30-50 mm; axle load to: 1215 kg
B16 RC	**1.8 TFSI, 2.0 TDI, 2.0 TDI quattro, 2.0 TFSI, 2.0 TFSI quattro, 2.7 TDI, 3.0 TDI, 3.0 TDI quattro, 3.0 TFSI quattro, 3.2 FSI, 3.2 FSI quattro, S5 quattro** 06/09 - 105 -245 kW	**49-151282**		without electronic suspension control; Conditions see certificates VA: lowering (expertise): 30-50 mm; axle load to: 1245 kg HA: lowering (expertise): 30-50 mm; axle load to: 1215 kg
AUDI A6 (4A, C4)				
B1	**1.8, 1.9 TDI, 2.0, 2.0 16V, 2.3, 2.4, 2.5 TDI, 2.6, 2.8** 06/94 - 10/97 66 -142 kW	**12-117338**	**12-117086**	VA: with ball bearing HA: without ball bearing; without ride height adjustment
B1	**1.8 quattro, 2.0 16V, 2.0 16V quattro, 2.3 quattro, 2.5 TDI quattro, 2.6 quattro, 2.8 quattro** 06/94 - 10/97 92 -142 kW	**12-117338**	**12-117086**	VA: with ball bearing HA: without ball bearing; For vehicles without stabilizer
B1	**S6 4.2 quattro, S6 Plus quattro, S6 Turbo quattro** 06/94 - 10/97 169 -240 kW	**12-117338**	**12-117086**	VA: with ball bearing HA: 01/96 ->; For vehicles without stabilizer
B3	**1.8, 2.0, 2.0 16V, 2.3** 06/94 - 10/97 74 -103 kW	**36-131204**	**36-131006**	with standard chassis
B3	**1.8, 1.9 TDI, 2.0, 2.0 16V, 2.3, 2.4, 2.5 TDI, 2.6, 2.8** 06/94 - 10/97 66 -142 kW	**36-131181**	**36-131013**	with standard chassis; Heavy Duty Version .
B3	**1.8 quattro** 12/95 - 10/97 92 kW	**36-131204**		with standard chassis
B3	**2.4, 2.6, 2.8** 06/94 - 10/97 102 -142 kW	**36-130764**	**36-131006**	with standard chassis
B3	**1.9 TDI, 2.5 TDI** 06/94 - 10/97 66 -103 kW	**36-133147**	**36-131006**	with standard chassis
B4	**1.8, 1.9 TDI, 2.0, 2.0 16V, 2.3, 2.4, 2.5 TDI, 2.8** 08/95 - 10/97 66 -120 kW	**21-030390** **11-103943** SP	**19-029214**	with standard chassis

AUDI				
AUDI A6 (4A, C4)				
B4	**1.8, 1.9 TDI, 2.0, 2.0 16V, 2.3, 2.4, 2.5 TDI, 2.6, 2.8** 06/94 - 10/97 66 -142 kW	**21-030390** **11-103943** SP		with sports suspension
B4	**1.8 quattro, 2.0 16V quattro, 2.3 quattro, 2.5 TDI quattro, 2.6 quattro, 2.8 quattro** 06/94 - 10/97 92 -142 kW	**21-030390** **11-103943** SP		with standard chassis
B4	**2.6, 2.8** 06/94 - 10/97 102 -142 kW	**21-030390** **11-103943** SP	**19-029214**	with standard chassis
B4	**S6 4.2 quattro, S6 Plus quattro, S6 Turbo quattro** 06/94 - 10/97 169 -240 kW	**21-030390** **11-103943** SP		with standard chassis
B6 Sport	**1.8, 1.9 TDI, 2.0, 2.0 16V, 2.3, 2.4, 2.5 TDI, 2.6, 2.8** 06/94 - 10/97 66 -142 kW	**34-003701**	**24-015769**	
B6 Sport	**1.8 quattro, 2.0 16V quattro, 2.3 quattro, 2.5 TDI quattro, 2.6 quattro, 2.8 quattro, S6 4.2 quattro, S6 Plus quattro, S6 Turbo quattro** 06/94 - 10/97 92 -240 kW	**34-003701**	**24-025935**	thread: M10
B6 Sport	**1.8 quattro, 2.0 16V quattro, 2.3 quattro, 2.5 TDI quattro, 2.6 quattro, 2.8 quattro, S6 4.2 quattro, S6 Plus quattro, S6 Turbo quattro** 06/94 - 10/97 92 -240 kW	**34-003701**	**24-020657**	with sports suspension; thread: M12
B8	**1.8, 1.9 TDI, 2.0, 2.0 16V, 2.3, 2.4, 2.5 TDI, 2.6, 2.8** 06/94 - 10/97 66 -142 kW	**34-003695**	**24-015738**	
B8	**1.8 quattro, 2.0 16V quattro, 2.3 quattro, 2.5 TDI quattro, 2.6 quattro, 2.8 quattro, S6 4.2 quattro, S6 Plus quattro, S6 Turbo quattro** 06/94 - 10/97 92 -240 kW	**34-003695**	**24-020664**	with sports suspension; thread: M12
B12 PK	**2.3, 2.5 TDI, 2.6, 2.8** 06/94 - 10/97 84 -142 kW	**46-192356**		without ride height adjustment; Conditions see certificates VA: lowering (expertise): 35 mm; axle load to: 1160 kg HA: lowering (expertise): 30 mm; axle load to: 1080 kg
B12 PK	**2.3, 2.5 TDI, 2.6, 2.8** 06/94 - 10/97 84 -142 kW	**46-192394**		without ride height adjustment; Conditions see certificates; automatic transmission VA: lowering (expertise): 35 mm; axle load to: 1160 kg HA: lowering (expertise): 30 mm; axle load to: 1080 kg
B12 PK	**2.3 quattro, 2.5 TDI quattro, 2.6 quattro, 2.8 quattro** 06/94 - 10/97 98 -142 kW	**46-192363**		without ride height adjustment; Conditions see certificates; thread: M12 VA: lowering (expertise): 35 mm; axle load to: 1240 kg HA: lowering (expertise): 30 mm; axle load to: 1200 kg
B12 PK	**2.3 quattro, 2.5 TDI quattro, 2.6 quattro, 2.8 quattro, S6 4.2 quattro, S6 Plus quattro, S6 Turbo quattro** 06/94 - 10/97 98 -240 kW	**46-192400**		without ride height adjustment; Conditions see certificates; automatic transmission VA: lowering (expertise): 35 mm; axle load to: 1240 kg HA: lowering (expertise): 30 mm; axle load to: 1200 kg
AUDI A6 Avant (4A, C4)				
B1	**1.8, 1.9 TDI, 2.0, 2.0 16V, 2.3, 2.4, 2.5 TDI, 2.6, 2.8** 08/95 - 12/97 66 -142 kW	**12-117338**	**12-117086**	VA: with ball bearing HA: without ball bearing; without ride height adjustment
B1	**1.8 quattro, 2.0 16V quattro, 2.3 quattro, 2.5 TDI quattro, 2.6 quattro, 2.8 quattro** 06/94 - 12/97 92 -142 kW	**12-117338**	**12-117086**	VA: with ball bearing HA: without ball bearing; For vehicles without stabilizer
B1	**S6 4.2 quattro, S6 Plus quattro, S6 Turbo quattro** 06/94 - 12/97 169 -240 kW	**12-117338**	**12-117086**	VA: with ball bearing HA: 01/96 ->; For vehicles without stabilizer

AUDI

AUDI A6 Avant (4A, C4)

B3	**1.8, 2.0, 2.0 16V, 2.3** 06/94 - 12/97 74 -103 kW	**36-131204**	**36-131020**	with standard chassis
B3	**1.8, 1.9 TDI, 2.0, 2.0 16V, 2.3, 2.4, 2.5 TDI, 2.6, 2.8** 08/95 - 12/97 66 -142 kW	**36-131181**	**36-131129**	with standard chassis; Heavy Duty Version .
B3	**2.4, 2.6, 2.8** 12/95 - 12/97 102 -142 kW	**36-130764**	**36-131020**	with standard chassis
B3	**1.9 TDI, 2.5 TDI** 06/94 - 12/97 66 -103 kW	**36-133147**	**36-131020**	with standard chassis
B4	**1.8, 1.9 TDI, 2.0, 2.0 16V, 2.3, 2.4, 2.5 TDI, 2.6, 2.8** 08/95 - 12/97 66 -142 kW	**21-030390** **11-103943** SP	**19-029214**	with standard chassis
B4	**1.8, 1.9 TDI, 2.0, 2.0 16V, 2.3, 2.4, 2.5 TDI, 2.6, 2.8** 08/95 - 12/97 66 -142 kW	**21-030390** **11-103943** SP		with sports suspension
B4	**1.8 quattro, 2.0 16V quattro, 2.3 quattro, 2.5 TDI quattro, 2.6 quattro, 2.8 quattro** 06/94 - 12/97 92 -142 kW	**21-030390** **11-103943** SP		with standard chassis
B4	**S6 4.2 quattro, S6 Plus quattro, S6 Turbo quattro** 06/94 - 12/97 169 -240 kW	**21-030390** **11-103943** SP		with standard chassis
B6 Sport	**1.8, 1.9 TDI, 2.0, 2.0 16V, 2.3, 2.4, 2.5 TDI, 2.6, 2.8** 08/95 - 12/97 66 -142 kW	**34-003701**	**24-015769**	
B6 Sport	**1.8 quattro, 2.0 16V quattro, 2.3 quattro, 2.5 TDI quattro, 2.6 quattro, 2.8 quattro, S6 4.2 quattro, S6 Plus quattro, S6 Turbo quattro** 06/94 - 12/97 92 -240 kW	**34-003701**	**24-025935**	thread: M10
B6 Sport	**1.8 quattro, 2.0 16V quattro, 2.3 quattro, 2.5 TDI quattro, 2.6 quattro, 2.8 quattro, S6 4.2 quattro, S6 Plus quattro, S6 Turbo quattro** 06/94 - 12/97 92 -240 kW	**34-003701**	**24-020657**	with sports suspension; thread: M12
B8	**1.8, 1.9 TDI, 2.0, 2.0 16V, 2.3, 2.4, 2.5 TDI, 2.6, 2.8** 08/95 - 12/97 66 -142 kW	**34-003695**	**24-015738**	
B8	**1.8 quattro, 2.0 16V quattro, 2.3 quattro, 2.5 TDI quattro, 2.6 quattro, 2.8 quattro, S6 4.2 quattro, S6 Plus quattro, S6 Turbo quattro** 06/94 - 12/97 92 -240 kW	**34-003695**	**24-020664**	with sports suspension; thread: M12
B12 PK	**2.3, 2.5 TDI, 2.6, 2.8** 06/94 - 12/97 84 -142 kW	**46-192370**		without ride height adjustment; Conditions see certificates VA: lowering (expertise): 35 mm; axle load to: 1160 kg HA: lowering (expertise): 30 mm; axle load to: 1080 kg
B12 PK	**2.3, 2.5 TDI, 2.6, 2.8** 06/94 - 12/97 84 -142 kW	**46-192417**		without ride height adjustment; Conditions see certificates; automatic transmission VA: lowering (expertise): 35 mm; axle load to: 1160 kg HA: lowering (expertise): 30 mm; axle load to: 1080 kg
B12 PK	**2.3 quattro, 2.5 TDI quattro, 2.6 quattro, 2.8 quattro** 06/94 - 12/97 98 -142 kW	**46-192387**		without ride height adjustment; Conditions see certificates; thread: M12 VA: lowering (expertise): 35 mm; axle load to: 1240 kg HA: lowering (expertise): 30 mm; axle load to: 1200 kg
B12 PK	**2.3 quattro, 2.5 TDI quattro, 2.6 quattro, 2.8 quattro, S6 4.2 quattro, S6 Plus quattro, S6 Turbo quattro** 06/94 - 12/97 98 -240 kW	**46-192424**		without ride height adjustment; Conditions see certificates; automatic transmission; thread: M12 VA: lowering (expertise): 35 mm; axle load to: 1240 kg HA: lowering (expertise): 30 mm; axle load to: 1200 kg

AUDI

AUDI A6 (4B, C5)

B1	**1.8, 1.8 T, 1.8 T quattro, 1.9 TDI, 2.0, 2.4, 2.4 quattro, 2.5 TDI, 2.5 TDI quattro, 2.7 quattro, 2.7 T, 2.7 T quattro, 2.8, 2.8 quattro, 3.0, 3.0 quattro, 3.7, 3.7 quattro, 4.2 quattro** 02/97 - 01/05 81 -220 kW	**12-117642**		VA: Material: Rubber/Metal; without ball bearing
B3	**1.8, 1.8 T, 2.0** 01/97 - 01/05 85 -132 kW	**37-131302**	**38-131097**	with standard chassis
B3	**1.8, 1.8 T, 1.9 TDI, 2.0, 2.4, 2.5 TDI, 2.7 T, 2.8, 3.0** 02/97 - 01/05 81 -169 kW	**37-131449**		with standard chassis; Heavy Duty Version .
B3	**1.8** 08/01 - CH-Nr. 85 kW	**37-131395**	**38-131097**	-> CH.Nr.: 4B-W-100000; with standard chassis
B3	**1.8 T quattro** 02/97 - 07/01 110 -132 kW	**37-131302**	**36-133048**	with standard chassis
B3	**1.8 T quattro** 08/01 - 01/05 110 -132 kW	**37-131395**	**36-133048**	with standard chassis
B3	**1.8 T quattro** 02/97 - 01/05 110 -132 kW	**37-131449**	**36-131167**	with standard chassis; Heavy Duty Version .
B3	**2.4, 2.7 T, 2.8** 02/97 - 01/05 100 -169 kW	**37-131395**	**38-131158**	with standard chassis
B3	**2.4 quattro, 2.7 quattro** 05/01 - 01/05 125 -195 kW	**37-131449**	**36-131167**	with standard chassis; Heavy Duty Version .
B3	**4.2 quattro** 11/98 - 12/00 220 kW	**37-131388**	**36-131167**	-> CH.Nr.: 4B-Y-200000; with standard chassis
B3	**1.9 TDI** 04/97 - 01/05 81 -85 kW	**37-131302**	**38-131097**	with standard chassis
B3	**1.9 TDI, 2.4, 2.5 TDI, 3.0** 02/00 - 01/05 96 -162 kW	**37-131395**	**38-131158**	with standard chassis
B3	**2.5 TDI quattro, 2.8 quattro, 2.8 24V** 05/97 - 12/00 110 -142 kW	**37-131395**	**36-131167**	-> CH.Nr.: 4B-Y-200000; with standard chassis
B3	**2.5 TDI quattro, 2.8 quattro, 3.0 quattro, 4.2 quattro** 01/01 - 01/05 110 -220 kW	**37-131449**	**36-131167**	with standard chassis; Heavy Duty Version .
B3	**2.5 TDI** 08/01 - 01/05 114 kW	**37-131388**	**38-131158**	with standard chassis
B3	**2.5 TDI** 08/01 - 01/05 114 kW	**37-131449**		with standard chassis; Heavy Duty Version .
B4	**1.8, 1.8 T, 1.9 TDI, 2.4, 2.5 TDI, 2.7 T, 2.8** 02/97 - 12/00 81 -169 kW	**22-031167** HA	**19-029443** VO **11-149835** SP	-> CH.Nr.: 4B-Y-200 000; with standard chassis
B4	**1.8, 1.8 T, 1.9 TDI, 2.4, 2.5 TDI, 2.7 T, 2.8** 02/97 - 12/00 81 -169 kW	**19-045771** HA	**19-140049** VO **11-149835** SP	-> CH.Nr.: 4B-Y-200 000; with sports suspension
B4	**1.8, 1.8 T, 1.9 TDI, 2.0, 2.4, 2.5 TDI, 2.7 T, 2.8, 3.0** 01/01 - 01/05 85 -169 kW	**19-119939** HA	**19-029443** VO **11-149835** SP	CH.Nr.: 4B-1-000 001 ->; with standard chassis
B4	**1.8, 1.8 T, 1.9 TDI, 2.0, 2.4, 2.5 TDI, 2.7 T, 2.8, 3.0** 01/01 - 01/05 85 -169 kW	**19-119939** HA	**19-140049** VO **11-149835** SP	CH.Nr.: 4B-1-000 001 ->; with sports suspension

AUDI

AUDI A6 (4B, C5)

B4	**1.8 T quattro, 2.4 quattro, 2.5 TDI quattro, 2.8 quattro** 02/97 - 12/00 110 -142 kW	**22-031167** VA	**19-184067** HA	-> CH.Nr.: 4B-Y-200 000; with standard chassis
B4	**1.8 T quattro, 2.4 quattro, 2.5 TDI quattro, 2.8 quattro** 02/97 - 12/00 110 -142 kW	**19-045771** VA	**19-184067** HA	-> CH.Nr.: 4B-Y-200 000; with sports suspension
B4	**1.8 T quattro, 2.4 quattro, 2.5 TDI quattro, 2.7 quattro, 2.7 T quattro, 2.8 quattro, 3.0 quattro, 3.7 quattro** 01/01 - 01/05 110 -195 kW	**19-119939** VA		CH.Nr.: 4B-1- 000 001 ->
B6 Sport	**1.8, 1.8 T, 1.9 TDI, 2.4, 2.5 TDI, 2.7 T, 2.8, 3.7** 02/97 - 12/00 81 -191 kW	**24-020794** VA	**24-025324** HA	-> CH.Nr.: 4B-Y-200000; without ride height adjustment VA: serie production spring seat must be used
B6 Sport	**1.8, 1.8 T, 1.9 TDI, 2.0, 2.4, 2.5 TDI, 2.7 T, 2.8, 3.0, 3.7** 01/01 - 01/05 85 -191 kW	**24-065085** VA	**24-065429** HA	CH.Nr.: 4B- 1- 000 001 ->; without ride height adjustment VA: serie production spring seat must be used
B6 Sport	**1.8 T quattro, 2.4 quattro, 2.5 TDI quattro, 2.7 T quattro, 2.8 quattro, 3.7 quattro, 4.2 quattro** 12/98 - 12/00 110 -220 kW	**24-020794** VA	**24-065092** HA	CH.Nr.: 4B-W-070 001-> 4B-Y-200 000 VA: serie production spring seat must be used
B6 Sport	**1.8 T quattro, 2.4 quattro, 2.5 TDI quattro, 2.7 quattro, 2.7 T quattro, 2.8 quattro, 3.0 quattro, 3.7 quattro, 4.2 quattro, S6 quattro** 01/01 - 01/05 110 -250 kW	**24-065085** VA	**24-065092** HA	CH.Nr.: 4B- 1- 000 001 ->; VA: serie production spring seat must be used
B8	**1.8, 1.8 T, 1.9 TDI, 2.4, 2.5 TDI, 2.7 T, 2.8, 3.7** 02/97 - 12/00 81 -191 kW	**24-020817** VA	**24-025331** HA **11-101390** SP	-> CH.Nr.: 4B-Y-200000; without ride height adjustment VA: serie production spring seat must be used
B8	**1.8, 1.8 T, 1.9 TDI, 2.0, 2.4, 2.5 TDI, 2.7 T, 2.8, 3.0, 3.7** 01/01 - 01/05 85 -191 kW	**24-065108** VA	**24-065436** HA	CH.Nr.: 4B- 1- 000 001 ->; without ride height adjustment VA: serie production spring seat must be used
B8	**1.8 T quattro, 2.4 quattro, 2.5 TDI quattro, 2.7 T quattro, 2.8 quattro, 3.7 quattro, 4.2 quattro, S6 quattro** 12/98 - 12/00 110 -250 kW	**24-020817** VA	**24-065115** HA	CH.Nr.: 4B-W-070 001-> 4B-Y-200 000 VA: serie production spring seat must be used
B8	**1.8 T quattro, 2.4 quattro, 2.5 TDI quattro, 2.7 quattro, 2.7 T quattro, 2.8 quattro, 3.0 quattro, 3.7 quattro, 4.2 quattro, S6 quattro** 01/01 - 01/05 110 -250 kW	**24-065108** VA	**24-065115** HA	CH.Nr.: 4B- 1- 000 001 ->; VA: serie production spring seat must be used
B12 PK	**1.8, 1.8 T, 1.9 TDI** 04/97 - 12/00 81 -132 kW	**46-192196**		-> CH.Nr.: 4B-Y-200000; serie production spring seat must be used; without ride height adjustment; Conditions see certificates VA: lowering (expertise): 30 mm; axle load to: 1150 kg HA: lowering (expertise): 30 mm; axle load to: 1090 kg
B12 PK	**1.8, 1.8 T, 1.9 TDI** 01/01 - 01/05 85 -132 kW	**46-192202**		CH.Nr.: 4B-1-000001 ->; serie production spring seat must be used; without ride height adjustment; Conditions see certificates VA: lowering (expertise): 30 mm; axle load to: 1150 kg HA: lowering (expertise): 30 mm; axle load to: 1090 kg
B12 PK	**1.8 T quattro** 12/98 - 12/00 110 -132 kW	**46-192240**		CH.Nr.: 4B-W-070001-> 4B-Y-200000; serie production spring seat must be used; without ride height adjustment; Conditions see certificates VA: lowering (expertise): 30 mm; axle load to: 1150 kg HA: lowering (expertise): 30 mm; axle load to: 1175 kg
B12 PK	**1.8 T quattro** 01/01 - 01/05 110 -132 kW	**46-192233**		CH.Nr.: 4B-1-000001 ->; serie production spring seat must be used; without ride height adjustment; Conditions see certificates VA: lowering (expertise): 30 mm; axle load to: 1150 kg HA: lowering (expertise): 30 mm; axle load to: 1175 kg
B12 PK	**2.4, 2.5 TDI, 2.7 T, 2.8** 02/97 - 12/00 100 -169 kW	**46-192219**		-> CH.Nr.: 4B-Y-200000; serie production spring seat must be used; without ride height adjustment; Conditions see certificates VA: lowering (expertise): 30 mm; axle load to: 1230 kg HA: lowering (expertise): 30 mm; axle load to: 1090 kg

AUDI

AUDI A6 (4B, C5)

B12 PK	**2.4, 2.5 TDI, 2.7, 2.7 T, 2.8, 3.0, 3.7** 01/01 - 01/05 100 -191 kW	**46-192226**		CH.Nr.: 4B-1-000001 ->; serie production spring seat must be used; without ride height adjustment; Conditions see certificates VA: lowering (expertise): 30 mm; axle load to: 1230 kg HA: lowering (expertise): 30 mm; axle load to: 1090 kg
B12 PK	**2.4 quattro, 2.5 TDI quattro, 2.7 T quattro, 2.8 quattro** 12/98 - 12/00 110 -169 kW	**46-192257**		CH.Nr.: 4B-W-070001-> 4B-Y-200000; serie production spring seat must be used; without ride height adjustment; Conditions see certificates VA: lowering (expertise): 30 mm; axle load to: 1230 kg HA: lowering (expertise): 30 mm; axle load to: 1175 kg
B12 PK	**2.4 quattro, 2.5 TDI quattro, 2.7 quattro, 2.7 T quattro, 2.8 quattro, 3.0 quattro** 01/01 - 01/05 110 -195 kW	**46-192264**		CH.Nr.: 4B-1-000001 ->; serie production spring seat must be used; without ride height adjustment; Conditions see certificates VA: lowering (expertise): 30 mm; axle load to: 1230 kg HA: lowering (expertise): 30 mm; axle load to: 1175 kg
B14	**1.8, 1.8 T, 1.9 TDI, 2.0, 2.4, 2.5 TDI, 2.7 T, 2.8, 3.0, 3.7** 02/97 - 01/05 81 -191 kW	**47-124806**		without ride height adjustment; Conditions see certificates VA: lowering (expertise): 35-55 mm; axle load to: 1205 kg HA: lowering (expertise): 35-55 mm; axle load to: 1130 kg
B14	**1.8 T quattro, 2.4 quattro, 2.5 TDI quattro, 2.7 quattro, 2.7 T quattro, 2.8 quattro, 3.0 quattro, 3.7 quattro, 4.2 quattro, S6 quattro** 02/97 - 01/05 110 -250 kW	**47-086937**		Conditions see certificates VA: lowering (expertise): 25-45 mm; axle load to: 1260 kg HA: lowering (expertise): 20-40 mm; axle load to: 1200 kg
B14	**RS6** 07/02 - 01/05 331 kW	**47-086937**		disconect DRC; Conditions see certificates VA: lowering (expertise): 25-45 mm; axle load to: 1260 kg HA: lowering (expertise): 20-40 mm; axle load to: 1200 kg
B16 PSS9	**1.8, 1.8 T, 1.9 TDI, 2.0, 2.4, 2.5 TDI, 2.7 T, 2.8, 3.0, 3.7** 02/97 - 01/05 81 -191 kW	**48-088749**		without ride height adjustment; Conditions see certificates VA: lowering (expertise): 35-55 mm; axle load to: 1205 kg HA: lowering (expertise): 35-55 mm; axle load to: 1130 kg
B16 PSS9	**1.8 T quattro, 2.4 quattro, 2.5 TDI quattro, 2.7 quattro, 2.7 T quattro, 2.8 quattro, 3.0 quattro, 3.7 quattro, 4.2 quattro, S6 quattro** 02/97 - 01/05 110 -250 kW	**48-088688**		Conditions see certificates VA: lowering (expertise): 25-45 mm; axle load to: 1260 kg HA: lowering (expertise): 10-40 mm; axle load to: 1200 kg
B16 PSS9	**RS6** 07/02 - 01/05 331 kW	**48-088688**		disconect DRC; Conditions see certificates VA: lowering (expertise): 25-45 mm; axle load to: 1260 kg HA: lowering (expertise): 20-40 mm; axle load to: 1200 kg

AUDI A6 Avant (4B, C5)

B1	**1.8, 1.8 T, 1.8 T quattro, 1.9 TDI, 2.0, 2.4, 2.4 quattro, 2.5 TDI, 2.5 TDI quattro, 2.7 T, 2.7 T quattro, 2.8, 2.8 quattro, 3.0, 3.0 quattro, 3.7, 3.7 quattro, 4.2 quattro** 12/97 - 01/05 81 -220 kW	**12-117642**		VA: Material: Rubber/Metal; without ball bearing
B3	**1.8, 1.8 T** 12/97 - 01/05 85 -132 kW	**37-131302**	**36-131280**	with standard chassis
B3	**1.8, 1.8 T, 1.9 TDI, 2.0, 2.4, 2.5 TDI, 2.7 T, 2.8, 3.0, 3.7** 08/01 - 01/05 85 -191 kW	**37-131449**		with standard chassis; Heavy Duty Version .
B3	**1.8 T quattro** 12/97 - 01/05 110 -132 kW	**37-131302**	**36-133048**	with standard chassis
B3	**1.8 T quattro** 12/97 - 01/05 110 -132 kW	**37-131449**		with standard chassis; Heavy Duty Version .
B3	**2.4, 2.7 T, 2.8** 12/97 - 01/05 100 -169 kW	**37-131395**	**36-131280**	with standard chassis
B3	**2.4 quattro, 2.5 TDI quattro, 2.8 quattro** 12/97 - 12/00 110 -142 kW	**37-131395**	**36-131167**	-> CH.Nr.: 4B-Y-200000; with standard chassis
B3	**2.4 quattro, 2.5 TDI quattro, 2.8 quattro** 01/01 - 01/05 110 -142 kW	**37-131449**	**36-131167**	with standard chassis; Heavy Duty Version .

AUDI

AUDI A6 Avant (4B, C5)

B3	**2.7 T quattro, 3.0 quattro** 08/01 - 01/05 162 -184 kW	**37-131449**	**36-131167**	with standard chassis; Heavy Duty Version .
B3	**4.2 quattro** 11/98 - CH-Nr. 220 kW	**37-131449**		-> CH.Nr.: 4B-W-100000; with standard chassis
B3	**1.9 TDI, 2.0, 2.4, 3.0** 02/98 - 01/05 81 -162 kW	**37-131302**	**36-131280**	with standard chassis
B3	**2.5 TDI** 12/97 - 01/05 110 kW	**37-131395**	**36-131280**	with standard chassis
B3	**2.5 TDI** 08/01 - 01/05 114 -120 kW	**37-131395**	**36-131280**	with standard chassis
B3	**2.5 TDI** 08/01 - 01/05 114 -120 kW	**37-131449**		with standard chassis; Heavy Duty Version .
B3	**2.5 TDI** 02/00 - 01/05 132 kW	**37-131388**	**36-131280**	with standard chassis
B4	**1.8, 1.8 T, 1.9 TDI, 2.4, 2.5 TDI, 2.8** 12/97 - 12/00 81 -142 kW	**22-031167**	**19-029443** **11-149835** SP	-> CH.Nr.: 4B-Y-200 000; with standard chassis
B4	**1.8, 1.8 T, 1.9 TDI, 2.4, 2.5 TDI, 2.8** 12/97 - 12/00 81 -142 kW	**19-045771**	**19-140049** **11-149835** SP	-> CH.Nr.: 4B-Y-200 000; with sports suspension
B4	**1.8, 1.8 T, 1.9 TDI, 2.0, 2.4, 2.5 TDI, 2.7 T, 2.8, 3.0** 01/01 - 01/05 81 -169 kW	**19-119939**	**19-029443** **11-149835** SP	CH.Nr.: 4B-1-000 001 ->; with standard chassis; without ride height adjustment
B4	**1.8, 1.8 T, 1.9 TDI, 2.0, 2.4, 2.5 TDI, 2.7 T, 2.8, 3.0** 01/01 - 01/05 81 -169 kW	**19-119939**	**19-140049** **11-149835** SP	CH.Nr.: 4B-1-000 001 ->; with sports suspension; without ride height adjustment
B4	**1.8 T quattro, 2.4 quattro, 2.5 TDI quattro, 2.7 T quattro, 2.8 quattro** 12/97 - 12/00 110 -169 kW	**22-031167**	**19-184067**	-> CH.Nr.: 4B-Y-200 000; with standard chassis
B4	**1.8 T quattro, 2.4 quattro, 2.5 TDI quattro, 2.7 T quattro, 2.8 quattro** 12/97 - 12/00 110 -169 kW	**19-045771**	**19-184067**	-> CH.Nr.: 4B-Y-200 000; with sports suspension
B4	**1.8 T quattro, 2.4 quattro, 2.5 TDI quattro, 2.7 T quattro, 2.8 quattro, 3.0 quattro, 3.7 quattro** 01/01 - 01/05 110 -191 kW	**19-119939**		CH.Nr.: 4B-1- 000 001 ->; without ride height adjustment
B6 Sport	**1.8, 1.8 T, 1.9 TDI, 2.0, 2.4, 2.5 TDI, 2.7 T, 2.8, 3.0, 3.7** 01/01 - 01/05 81 -191 kW	**24-065085**	**24-065443**	CH.Nr.: 4B- 1- 000 001 ->; without ride height adjustment VA: serie production spring seat must be used
B6 Sport	**1.8, 1.8 T, 1.9 TDI, 2.4, 2.5 TDI, 2.7 T, 2.8** 12/97 - 12/00 81 -169 kW	**24-020794**	**24-026994**	-> CH.Nr.: 4B-Y-200 000; without ride height adjustment VA: serie production spring seat must be used
B6 Sport	**1.8 T quattro, 2.4 quattro, 2.5 TDI quattro, 2.7 T quattro, 2.8 quattro** 12/98 - 12/00 110 -169 kW	**24-020794**	**24-065092**	CH.Nr.: 4B-W-070 001-> 4B-Y-200 000 VA: serie production spring seat must be used
B6 Sport	**1.8 T quattro, 2.4 quattro, 2.5 TDI quattro, 2.7 T quattro, 2.8 quattro, 3.0 quattro, 3.7 quattro, 4.2 quattro** 01/01 - 01/05 110 -220 kW	**24-065085**	**24-065092**	CH.Nr.: 4B-1-000001 ->; without sport chassis; without ride height adjustment VA: serie production spring seat must be used
B8	**1.8, 1.8 T, 1.9 TDI, 2.0, 2.4, 2.5 TDI, 2.7 T, 2.8, 3.0, 3.7** 01/01 - 01/05 81 -191 kW	**24-065108**	**24-065450**	CH.Nr.: 4B- 1- 000 001 ->; without ride height adjustment VA: serie production spring seat must be used
B8	**1.8, 1.8 T, 1.9 TDI, 2.4, 2.5 TDI, 2.7 T, 2.8** 12/97 - 12/00 81 -169 kW	**24-020817**	**24-027007** **11-103462** SP	-> CH.Nr.: 4B-Y-200 000; without ride height adjustment VA: serie production spring seat must be used

AUDI

AUDI A6 Avant (4B, C5)

B8	**1.8 T quattro, 2.4 quattro, 2.5 TDI quattro, 2.7 T quattro, 2.8 quattro, 3.7 quattro, 4.2 quattro, S6 quattro** 12/98 - 12/00 110 -250 kW	**24-020817**	**24-065115**	CH.Nr.: 4B-W-070 001-> 4B-Y-200 000; without ride height adjustment VA: serie production spring seat must be used
B8	**1.8 T quattro, 2.4 quattro, 2.5 TDI quattro, 2.7 T quattro, 2.8 quattro, 3.0 quattro, 3.7 quattro, 4.2 quattro, S6 quattro** 01/01 - 01/05 110 -250 kW	**24-065108**	**24-065115**	CH.Nr.: 4B-1-000001 ->; with sports suspension; without ride height adjustment VA: serie production spring seat must be used
B12 PK	**1.8, 1.8 T, 1.9 TDI** 12/97 - 12/00 81 -132 kW	**46-192271**		-> CH.Nr.: 4B-Y-200000; serie production spring seat must be used; without ride height adjustment; Conditions see certificates VA: lowering (expertise): 30 mm; axle load to: 1150 kg HA: lowering (expertise): 30 mm; axle load to: 1130 kg
B12 PK	**1.8, 1.8 T, 1.9 TDI, 2.0** 01/01 - 01/05 81 -132 kW	**46-192288**		CH.Nr.: 4B-1-000001 ->; serie production spring seat must be used; without ride height adjustment; Conditions see certificates VA: lowering (expertise): 30 mm; axle load to: 1150 kg HA: lowering (expertise): 30 mm; axle load to: 1130 kg
B12 PK	**1.8 T quattro** 12/98 - 12/00 110 -132 kW	**46-192318**		CH.Nr.: 4B-W-070001-> 4B-Y-200000; serie production spring seat must be used; without ride height adjustment; Conditions see certificates VA: lowering (expertise): 30 mm; axle load to: 1150 kg HA: lowering (expertise): 30 mm; axle load to: 1230 kg
B12 PK	**1.8 T quattro** 01/01 - 01/05 110 -132 kW	**46-192325**		CH.Nr.: 4B-1-000001 ->; serie production spring seat must be used; without ride height adjustment; Conditions see certificates VA: lowering (expertise): 30 mm; axle load to: 1230 kg HA: lowering (expertise): 30 mm; axle load to: 1230 kg
B12 PK	**2.4, 2.5 TDI, 2.7 T, 2.8** 12/97 - 12/00 100 -169 kW	**46-192295**		-> CH.Nr.: 4B-Y-200000; serie production spring seat must be used; without ride height adjustment; Conditions see certificates VA: lowering (expertise): 30 mm; axle load to: 1230 kg HA: lowering (expertise): 30 mm; axle load to: 1130 kg
B12 PK	**2.4, 2.5 TDI, 2.7 T, 2.8, 3.0** 01/01 - 01/05 100 -169 kW	**46-192301**		CH.Nr.: 4B-1-000001 ->; serie production spring seat must be used; without ride height adjustment; Conditions see certificates VA: lowering (expertise): 30 mm; axle load to: 1230 kg HA: lowering (expertise): 30 mm; axle load to: 1130 kg
B12 PK	**2.4 quattro, 2.5 TDI quattro, 2.7 T quattro, 2.8 quattro** 12/98 - 12/00 110 -169 kW	**46-192332**		CH.Nr.: 4B-W-070001-> 4B-Y-200000; serie production spring seat must be used; without ride height adjustment; Conditions see certificates VA: lowering (expertise): 30 mm; axle load to: 1230 kg HA: lowering (expertise): 30 mm; axle load to: 1230 kg
B12 PK	**2.4 quattro, 2.5 TDI quattro, 2.7 T quattro, 2.8 quattro, 3.0 quattro** 01/01 - 01/05 110 -184 kW	**46-192349**		CH.Nr.: 4B-1-000001 ->; serie production spring seat must be used; without ride height adjustment; Conditions see certificates VA: lowering (expertise): 30 mm; axle load to: 1230 kg HA: lowering (expertise): 30 mm; axle load to: 1230 kg
B14	**1.8, 1.8 T, 1.9 TDI, 2.0, 2.4, 2.5 TDI, 2.7 T, 2.8, 3.0, 3.7** 12/97 - 01/05 81 -191 kW	**47-124806**		without ride height adjustment; Conditions see certificates VA: lowering (expertise): 35-55 mm; axle load to: 1205 kg HA: lowering (expertise): 35-55 mm; axle load to: 1130 kg
B14	**1.8 T quattro, 2.4 quattro, 2.5 TDI quattro, 2.7 T quattro, 2.8 quattro, 3.0 quattro, 3.7 quattro, 4.2 quattro, S6 quattro** 12/97 - 01/05 110 -250 kW	**47-086937**		without ride height adjustment; Conditions see certificates VA: lowering (expertise): 25-45 mm; axle load to: 1260 kg HA: lowering (expertise): 20-40 mm; axle load to: 1200 kg
B14	**RS6, RS6 plus** 07/02 - 01/05 331 -353 kW	**47-086937**		disconect DRC; without ride height adjustment; Conditions see certificates VA: lowering (expertise): 45 mm; axle load to: 1260 kg HA: lowering (expertise): 40 mm; axle load to: 1200 kg
B16 PSS9	**1.8, 1.8 T, 1.9 TDI, 2.0, 2.4, 2.5 TDI, 2.7 T, 2.8, 3.0, 3.7** 12/97 - 01/05 81 -191 kW	**48-088749**		without ride height adjustment; Conditions see certificates VA: lowering (expertise): 35-55 mm; axle load to: 1205 kg HA: lowering (expertise): 35-55 mm; axle load to: 1130 kg
B16 PSS9	**1.8 T quattro, 2.4 quattro, 2.5 TDI quattro, 2.7 T quattro, 2.8 quattro, 3.0 quattro, 3.7 quattro, 4.2 quattro, S6 quattro** 12/97 - 01/05 110 -250 kW	**48-088688**		without sport chassis; without ride height adjustment; Conditions see certificates VA: lowering (expertise): 45 mm; axle load to: 1260 kg HA: lowering (expertise): 40 mm; axle load to: 1200 kg
B16 PSS9	**RS6, RS6 plus** 07/02 - 01/05 331 -353 kW	**48-088688**		disconect DRC; without ride height adjustment; Conditions see certificates VA: lowering (expertise): 45 mm; axle load to: 1260 kg HA: lowering (expertise): 40 mm; axle load to: 1200 kg

AUDI

AUDI A6 Avant (4B, C5)

AUDI A6 (4F2)

B1	**2.0 TDI, 2.0 TFSI, 2.4, 2.4 quattro, 2.7 TDI, 2.7 TDI quattro, 2.8 FSI, 2.8 FSI quattro, 3.0, 3.0 quattro, 3.0 TDi PF, 3.0 TDI quattro, 3.0 TFSI quattro, 3.2 FSI, 3.2 FSI quattro, 4.2 quattro, 4.2 FSI quattro, S6 quattro** 05/04 - 03/11 89 -320 kW	**12-224487**	**12-224470**	VA: without ball bearing; without electronic suspension control HA: without ball bearing
B3	**2.4 quattro, 2.8 FSI quattro** 01/05 - 03/11 130 -162 kW	**36-203192**	**36-203185**	with standard chassis; mark: 1BA
B3	**2.0 TDI, 2.0 TFSI, 2.4, 2.8 FSI, 3.0, 3.2 FSI** 05/04 - 05/09 89 -188 kW	**36-203178**	**36-203185**	with standard chassis; mark: 1BA
B3	**2.0 TDI, 2.0 TFSI, 2.4, 2.4 quattro, 2.8 FSI, 2.8 FSI quattro, 3.0, 3.0 quattro, 3.0 TFSI quattro, 3.2 FSI, 3.2 FSI quattro** 05/04 - 10/08 89 -220 kW	**36-203147**	**36-203161**	with sports suspension; mark: 1BE; not for: S-Line
B3	**2.7 TDI, 3.0 quattro, 3.0 TDi PF, 3.0 TFSI quattro, 3.2 FSI quattro** 05/04 - 03/11 120 -220 kW	**36-203208**	**36-203185**	with standard chassis; mark: 1BA
B3	**2.7 TDI, 2.7 TDI quattro, 3.0 TDi PF, 3.0 TDI quattro** 05/04 - 03/11 120 -176 kW	**36-203154**	**36-203161**	with sports suspension; mark: 1BV; not for: S-Line
B3	**2.7 TDI quattro, 3.0 TDI quattro** 05/04 - 03/11 120 -176 kW	**36-203215**	**36-203185**	with standard chassis; mark: 1BA
B4	**2.0 TDI, 2.0 TFSI, 2.4, 2.4 quattro, 2.7 TDI, 2.7 TDI quattro, 2.8 FSI, 2.8 FSI quattro, 3.0, 3.0 quattro, 3.0 TDi PF, 3.0 TDI quattro, 3.0 TFSI quattro, 3.2 FSI, 3.2 FSI quattro, 4.2 quattro, 4.2 FSI quattro** 05/04 - 03/11 89 -257 kW	**19-139951** HA	**19-139968** VO	without ride height adjustment; without pneumatic suspension
B6 Sport	**2.0 TDI, 2.0 TFSI, 2.4, 2.4 quattro, 2.7 TDI, 2.7 TDI quattro, 2.8 FSI, 2.8 FSI quattro, 3.0, 3.0 quattro, 3.0 TDi PF, 3.0 TDI quattro, 3.0 TFSI quattro, 3.2 FSI, 3.2 FSI quattro, 4.2 quattro, 4.2 FSI quattro** 05/04 - 03/11 89 -257 kW	**35-116288**	**24-116299** VO	with standard chassis; without ride height adjustment; without pneumatic suspension
B8	**2.0 TDI, 2.0 TFSI, 2.4, 2.4 quattro, 2.7 TDI, 2.7 TDI quattro, 2.8 FSI, 2.8 FSI quattro, 3.0, 3.0 quattro, 3.0 TDi PF, 3.0 TDI quattro, 3.0 TFSI quattro, 3.2 FSI, 3.2 FSI quattro, 4.2 quattro, 4.2 FSI quattro, S6 quattro** 05/04 - 03/11 89 -320 kW	**35-116301**	**24-116312** VO	with sports suspension; without ride height adjustment; without pneumatic suspension
B12 PK	**2.4 quattro, 2.8 FSI quattro, 3.0 quattro, 3.0 TFSI quattro, 3.2 FSI quattro** 05/04 - 03/11 130 -220 kW	**46-189851**		without ride height adjustment; Conditions see certificates; without pneumatic suspension VA: lowering (expertise): 30 mm; axle load to: 1215 kg HA: lowering (expertise): 30 mm; axle load to: 1240 kg
B12 PK	**2.0 TDI, 2.0 TFSI, 2.4, 2.8 FSI, 3.0, 3.2 FSI** 05/04 - 05/09 89 -188 kW	**46-189844**		without ride height adjustment; Conditions see certificates; without pneumatic suspension VA: lowering (expertise): 30 mm; axle load to: 1215 kg HA: lowering (expertise): 30 mm; axle load to: 1115 kg
B12 PK	**2.7 TDI** 11/04 - 03/11 120 -140 kW	**46-189882**		without ride height adjustment; Conditions see certificates; without pneumatic suspension VA: lowering (expertise): 30 mm; axle load to: 1350 kg HA: lowering (expertise): 30 mm; axle load to: 1115 kg

AUDI				
AUDI A6 (4F2)				
B12 PK	**2.7 TDI quattro, 3.0 TDI quattro, 4.2 quattro** 05/04 - 03/11 120 -246 kW	**46-189875**		without ride height adjustment; Conditions see certificates; without pneumatic suspension VA: lowering (expertise): 30 mm; axle load to: 1350 kg HA: lowering (expertise): 30 mm; axle load to: 1240 kg
B14	**RS6 quattro, S6 quattro** 03/06 - 03/11 320 -426 kW	**47-116573**		disconect DRC; without ride height adjustment; Conditions see certificates; without pneumatic suspension VA: lowering (expertise): 20-40 mm; axle load to: 1410 kg HA: lowering (expertise): 20-40 mm; axle load to: 1380 kg
B14	**2.0 TDI, 2.0 TFSI, 2.4, 2.4 quattro, 2.7 TDI, 2.7 TDI quattro, 2.8 FSI, 2.8 FSI quattro, 3.0, 3.0 quattro, 3.0 TDi PF, 3.0 TDI quattro, 3.0 TFSI quattro, 3.2 FSI, 3.2 FSI quattro, 4.2 quattro, 4.2 FSI quattro** 05/04 - 03/11 89 -257 kW	**47-116573**		without ride height adjustment; Conditions see certificates; without pneumatic suspension VA: lowering (expertise): 40-60 mm; axle load to: 1410 kg HA: lowering (expertise): 40-60 mm; axle load to: 1380 kg
B16 PSS9	**RS6 quattro, S6 quattro** 03/06 - 03/11 320 -426 kW	**48-116541**		disconect DRC; without ride height adjustment; Conditions see certificates; without pneumatic suspension VA: lowering (expertise): 20-40 mm; axle load to: 1410 kg HA: lowering (expertise): 20-40 mm; axle load to: 1380 kg
B16 PSS9	**2.0 TDI, 2.0 TFSI, 2.4, 2.4 quattro, 2.7 TDI, 2.7 TDI quattro, 2.8 FSI, 2.8 FSI quattro, 3.0, 3.0 quattro, 3.0 TDi PF, 3.0 TDI quattro, 3.0 TFSI quattro, 3.2 FSI, 3.2 FSI quattro, 4.2 quattro, 4.2 FSI quattro** 05/04 - 03/11 89 -257 kW	**48-116541**		without ride height adjustment; Conditions see certificates; without pneumatic suspension VA: lowering (expertise): 40-60 mm; axle load to: 1410 kg HA: lowering (expertise): 40-60 mm; axle load to: 1380 kg
AUDI A6 Avant (4F5)				
B1	**2.0 TDI, 2.0 TFSI, 2.4, 2.4 quattro, 2.7 TDI, 2.7 TDI quattro, 2.8 FSI, 2.8 FSI quattro, 3.0, 3.0 quattro, 3.0 TDi PF, 3.0 TDI quattro, 3.0 TFSI quattro, 3.2 FSI, 3.2 FSI quattro, 4.2 quattro, 4.2 FSI quattro, S6 quattro** 03/05 - 08/11 89 -320 kW	**12-224487**	**12-224470**	VA: without ball bearing; without electronic suspension control HA: without ball bearing
B3	**2.4 quattro, 2.8 FSI quattro** 03/05 - 08/11 130 -162 kW	**36-203192**	**36-199822**	with standard chassis; mark: 1BA
B3	**2.0 TDI, 2.0 TFSI, 2.4, 2.8 FSI, 3.0, 3.2 FSI** 03/05 - 10/08 89 -188 kW	**36-203178**	**36-199822**	with standard chassis; mark: 1BA
B3	**2.0 TDI, 2.0 TFSI, 2.4, 2.4 quattro, 2.8 FSI, 2.8 FSI quattro, 3.0, 3.0 quattro, 3.0 TFSI quattro, 3.2 FSI** 03/05 - 10/08 89 -220 kW	**36-203147**	**36-199877**	with sports suspension; mark: 1BV; not for: S-Line
B3	**2.7 TDI, 3.0 quattro, 3.0 TDi PF, 3.0 TFSI quattro, 3.2 FSI quattro** 03/05 - 08/11 120 -220 kW	**36-203208**	**36-199822**	with standard chassis; mark: 1BA
B3	**2.7 TDI, 2.7 TDI quattro, 3.0 TDi PF, 3.0 TDI quattro, 3.2 FSI quattro** 03/05 - 08/11 120 -188 kW	**36-203154**	**36-199877**	with sports suspension; mark: 1BV; not for: S-Line
B3	**2.7 TDI quattro, 3.0 TDI quattro** 03/05 - 08/11 120 -176 kW	**36-203215**	**36-199822**	with standard chassis; mark: 1BA
B4	**2.0 TDI, 2.0 TFSI, 2.4, 2.4 quattro, 2.7 TDI, 2.8 FSI, 2.8 FSI quattro, 3.0, 3.0 TDi PF, 3.0 TFSI quattro, 3.2 FSI** 03/05 - 10/08 89 -220 kW	**19-139951**	**19-139968**	without ride height adjustment; without pneumatic suspension

AUDI

AUDI A6 Avant (4F5)

B6 Sport	**2.0 TDI, 2.0 TFSI, 2.4, 2.4 quattro, 2.7 TDI, 2.7 TDI quattro, 2.8 FSI, 2.8 FSI quattro, 3.0, 3.0 quattro, 3.0 TDi PF, 3.0 TDI quattro, 3.0 TFSI quattro, 3.2 FSI, 3.2 FSI quattro, 4.2 quattro, 4.2 FSI quattro** 03/05 - 08/11 89 -257 kW	**35-116288**	**24-116299**	with standard chassis; without ride height adjustment; without pneumatic suspension
B8	**2.0 TDI, 2.0 TFSI, 2.4, 2.4 quattro, 2.7 TDI, 2.7 TDI quattro, 2.8 FSI, 2.8 FSI quattro, 3.0, 3.0 quattro, 3.0 TDi PF, 3.0 TDI quattro, 3.0 TFSI quattro, 3.2 FSI, 3.2 FSI quattro, 4.2 quattro, 4.2 FSI quattro, S6 quattro** 03/05 - 08/11 89 -320 kW	**35-116301**	**24-116312**	with sports suspension; without ride height adjustment; without pneumatic suspension
B12 PK	**2.4 quattro, 2.8 FSI quattro, 3.0 quattro, 3.2 FSI quattro** 03/05 - 08/11 130 -188 kW	**46-189912**		without ride height adjustment; Conditions see certificates; without pneumatic suspension VA: lowering (expertise): 30 mm; axle load to: 1215 kg HA: lowering (expertise): 30 mm; axle load to: 1335 kg
B12 PK	**S6 quattro** 03/06 - 08/11 320 kW	**46-189936**		without ride height adjustment; Conditions see certificates; without pneumatic suspension VA: lowering (expertise): 20 mm; axle load to: 1350 kg HA: lowering (expertise): 10 mm; axle load to: 1335 kg
B12 PK	**2.0 TDI, 2.0 TFSI, 2.4, 2.8 FSI, 3.0, 3.2 FSI** 03/05 - 10/08 89 -188 kW	**46-189899**		without ride height adjustment; Conditions see certificates; without pneumatic suspension VA: lowering (expertise): 30 mm; axle load to: 1215 kg HA: lowering (expertise): 30 mm; axle load to: 1240 kg
B12 PK	**2.7 TDI** 03/05 - 08/11 120 -140 kW	**46-189905**		without ride height adjustment; Conditions see certificates; without pneumatic suspension VA: lowering (expertise): 30 mm; axle load to: 1350 kg HA: lowering (expertise): 30 mm; axle load to: 1240 kg
B12 PK	**2.7 TDI quattro, 3.0 TDI quattro, 3.0 TFSI quattro, 4.2 quattro, 4.2 FSI quattro** 03/05 - 08/11 120 -257 kW	**46-189929**		without ride height adjustment; Conditions see certificates; without pneumatic suspension VA: lowering (expertise): 30 mm; axle load to: 1350 kg HA: lowering (expertise): 30 mm; axle load to: 1335 kg
B14	**S6 quattro** 03/06 - 08/11 320 kW	**47-116573**		without ride height adjustment; Conditions see certificates; without pneumatic suspension VA: lowering (expertise): 20-40 mm; axle load to: 1410 kg HA: lowering (expertise): 20-40 mm; axle load to: 1380 kg
B14	**2.0 TDI, 2.0 TFSI, 2.4, 2.4 quattro, 2.7 TDI, 2.7 TDI quattro, 2.8 FSI, 2.8 FSI quattro, 3.0, 3.0 quattro, 3.0 TDi PF, 3.0 TDI quattro, 3.0 TFSI quattro, 3.2 FSI, 3.2 FSI quattro, 4.2 quattro, 4.2 FSI quattro** 03/05 - 08/11 89 -257 kW	**47-116573**		without ride height adjustment; Conditions see certificates; without pneumatic suspension VA: lowering (expertise): 40-60 mm; axle load to: 1410 kg HA: lowering (expertise): 40-60 mm; axle load to: 1380 kg
B16 PSS9	**S6 quattro** 03/06 - 08/11 320 kW	**48-116541**		without ride height adjustment; Conditions see certificates; without pneumatic suspension VA: lowering (expertise): 20-40 mm; axle load to: 1410 kg HA: lowering (expertise): 20-40 mm; axle load to: 1380 kg
B16 PSS9	**2.0 TDI, 2.0 TFSI, 2.4, 2.4 quattro, 2.7 TDI, 2.7 TDI quattro, 2.8 FSI, 2.8 FSI quattro, 3.0, 3.0 quattro, 3.0 TDi PF, 3.0 TDI quattro, 3.0 TFSI quattro, 3.2 FSI, 3.2 FSI quattro, 4.2 quattro, 4.2 FSI quattro** 03/05 - 08/11 89 -257 kW	**48-116541**		without ride height adjustment; Conditions see certificates; without pneumatic suspension VA: lowering (expertise): 40-60 mm; axle load to: 1410 kg HA: lowering (expertise): 40-60 mm; axle load to: 1380 kg

AUDI A6 Allroad (4FH)

B1	**2.7 TDI quattro, 3.0 TDI quattro, 3.0 TFSI quattro, 3.2 FSI quattro, 4.2 FSI quattro** 05/06 - 120 -257 kW		**12-224470**	HA: without ball bearing

AUDI				
AUDI A6 (4G2)				
B1	**2.0 TDI, 2.0 TFSI, 2.8 FSI, 2.8 FSI quattro, 3.0 TDI, 3.0 TDI quattro, 3.0 TFSI quattro** 11/10 - 130 -230 kW	**12-224463**		VA: without ball bearing
B6 Sport	**2.0 TDI, 2.0 TFSI, 2.0 TFSI hybrid, 2.8 FSI, 2.8 FSI quattro, 3.0 TDI, 3.0 TDI quattro, 3.0 TFSI quattro** 08/11 - 100 -230 kW	**24-145961**	**24-145978**	with standard chassis; without ride height adjustment; without pneumatic suspension
B8	**2.0 TDI, 2.0 TFSI, 2.0 TFSI hybrid, 2.8 FSI, 2.8 FSI quattro, 3.0 TDI, 3.0 TDI quattro, 3.0 TFSI quattro** 08/11 - 100 -230 kW	**24-145985**	**24-145992**	with standard chassis; without ride height adjustment; without pneumatic suspension
B16 PSS10	**S6 quattro** 02/12 - 309 kW	**48-221832**		Conditions see certificates; without pneumatic suspension VA: lowering (expertise): 15-35 mm HA: lowering (expertise): 15-35 mm
B16 PSS10	**2.0 TDI, 2.0 TFSI, 2.0 TFSI hybrid, 2.8 FSI, 2.8 FSI quattro, 3.0 TDI, 3.0 TDI quattro, 3.0 TFSI quattro** 08/11 - 100 -230 kW	**48-221832**		Conditions see certificates VA: lowering (expertise): 30-50 mm HA: lowering (expertise): 30-50 mm
AUDI A6 Avant (4G5)				
B1	**2.0 TDI, 2.0 TFSI, 2.8 FSI, 2.8 FSI quattro, 3.0 TDI, 3.0 TDI quattro, 3.0 TFSI quattro** 11/11 - 100 -230 kW	**12-224463**		VA: without ball bearing
B6 Sport	**2.0 TDI, 2.0 TFSI, 2.8 FSI, 2.8 FSI quattro, 3.0 TDI, 3.0 TDI quattro, 3.0 TFSI quattro** 11/11 - 100 -230 kW	**24-145961**	**24-145978**	with standard chassis; without ride height adjustment; without pneumatic suspension
B8	**2.0 TDI, 2.0 TFSI, 2.8 FSI, 2.8 FSI quattro, 3.0 TDI, 3.0 TDI quattro, 3.0 TFSI quattro** 11/11 - 100 -230 kW	**24-145985**	**24-145992**	with standard chassis; without ride height adjustment; without pneumatic suspension
B16 PSS10	**S6 quattro** 02/12 - 309 kW	**48-221832**		Conditions see certificates; without pneumatic suspension VA: lowering (expertise): 15-35 mm HA: lowering (expertise): 15-35 mm
B16 PSS10	**2.0 TDI, 2.0 TFSI, 2.8 FSI, 2.8 FSI quattro, 3.0 TDI, 3.0 TDI quattro, 3.0 TFSI quattro** 11/11 - 100 -230 kW	**48-221832**		Conditions see certificates; without pneumatic suspension VA: lowering (expertise): 30-50 mm HA: lowering (expertise): 30-50 mm
AUDI A7 Sportback				
B1	**2.8 FSI, 2.8 FSI quattro, 3.0 TDI, 3.0 TDI quattro, 3.0 TFSI quattro** 10/10 - 150 -230 kW	**12-224463**		VA: without ball bearing
B6 Sport	**2.8 FSI, 2.8 FSI quattro, 3.0 TDI, 3.0 TDI quattro, 3.0 TFSI quattro** 01/11 - 150 -230 kW	**24-145961**	**24-145978**	with standard chassis; without ride height adjustment; without pneumatic suspension
B8	**2.8 FSI, 2.8 FSI quattro, 3.0 TDI, 3.0 TDI quattro, 3.0 TFSI quattro** 01/11 - 150 -230 kW	**24-145985**	**24-145992**	with standard chassis; without ride height adjustment; without pneumatic suspension
AUDI V8 (44_, 4C_)				
B1	**3.6 quattro, 4.2 quattro** 10/91 - 02/94 180 -206 kW	**12-117338**	**12-117086**	VA: with ball bearing HA: without ball bearing
B4	**3.6 quattro, 4.2 quattro** 10/91 - 02/94 180 -206 kW	**21-030390** **11-103943** SP		

AUDI				
AUDI V8 (44_, 4C_)				
B6 Sport	**3.6 quattro, 4.2 quattro** 10/91 - 02/94 180 -206 kW	**34-003701**	**24-020657**	without ride height adjustment
B8	**3.6 quattro, 4.2 quattro** 10/91 - 02/94 180 -206 kW	**34-003695**	**24-020664**	without ride height adjustment
AUDI A8 (4D2, 4D8)				
B1	**2.5 TDI, 2.5 TDI quattro, 2.8, 2.8 quattro, 3.3 TDI quattro, 3.7, 3.7 quattro, 4.2 quattro, 6.0 W12 quattro** 03/94 - 09/02 110 -309 kW	**12-117642**		VA: Material: Rubber/Metal; without ball bearing
B3	**2.8** 03/94 - 03/96 120 -128 kW	**36-201358**	**36-160402**	with standard chassis; manual transmission
B3	**2.8** 03/94 - 03/96 120 -128 kW	**36-195763**	**36-160402**	with standard chassis; automatic transmission
B3	**2.8** 04/96 - 09/02 142 kW	**36-195763**	**36-160402**	with standard chassis; manual transmission
B3	**2.8** 04/96 - 09/02 142 kW	**36-195770**	**36-160402**	with standard chassis; automatic transmission
B3	**4.2 quattro** 03/94 - 04/00 175 -220 kW		**36-160396**	with standard chassis; Heavy Duty Version .
B3	**2.5 TDI, 3.7** 07/95 - 09/02 110 -191 kW	**36-160389**	**36-160402**	with standard chassis
B3	**2.5 TDI, 2.8, 3.7** 07/95 - 09/02 110 -191 kW		**36-160396**	with standard chassis; Heavy Duty Version .
B3	**2.5 TDI, 2.5 TDI quattro, 2.8, 2.8 quattro, 3.3 TDI quattro, 3.7, 3.7 quattro, 4.2 quattro** 03/94 - 09/02 110 -228 kW		**36-160396**	with standard chassis; with ride height adjustment
B3	**2.5 TDI quattro, 2.8 quattro, 3.3 TDI quattro, 3.7 quattro, 4.2 quattro** 03/94 - 09/02 110 -228 kW	**36-160389**	**36-160402**	with standard chassis
B6 Sport	**2.5 TDI, 2.5 TDI quattro, 2.8, 2.8 quattro, 3.7, 3.7 quattro, 4.2 quattro, S 8 quattro** 07/96 - 04/00 110 -265 kW	**24-026093**	**24-026161**	-> CH.Nr.: 4D-Y-020000; without ride height adjustment
B6 Sport	**2.5 TDI, 2.5 TDI quattro, 2.8, 2.8 quattro, 3.3 TDI quattro, 3.7, 3.7 quattro, 4.2 quattro, 6.0 W12 quattro, S 8 quattro** 05/00 - 09/02 132 -309 kW	**24-066785**	**24-026161**	CH.Nr.: 4D-1-000 001 ->; without ride height adjustment
B12 PK	**3.7, 3.7 quattro, 4.2 quattro** 03/94 - 04/00 169 -228 kW	**46-193810**		-> CH.Nr.: 4D-Y-020000; without ride height adjustment; Conditions see certificates VA: lowering (expertise): 25 mm; axle load to: 1254 kg HA: lowering (expertise): 25 mm; axle load to: 1230 kg
B12 PK	**3.7, 3.7 quattro, 4.2 quattro** 05/00 - 09/02 191 -228 kW	**46-193834**		CH.Nr.: 4D-1-000 001 ->; without ride height adjustment; Conditions see certificates VA: lowering (expertise): 25 mm; axle load to: 1254 kg HA: lowering (expertise): 25 mm; axle load to: 1230 kg
B12 PK	**2.5 TDI, 2.5 TDI quattro, 2.8, 2.8 quattro** 04/96 - 04/00 110 -142 kW	**46-193827**		-> CH.Nr.: 4D-Y-020000; without ride height adjustment; Conditions see certificates VA: lowering (expertise): 25 mm; axle load to: 1255 kg HA: lowering (expertise): 25 mm; axle load to: 1230 kg
B12 PK	**2.5 TDI, 2.5 TDI quattro, 2.8, 2.8 quattro** 05/00 - 09/02 132 -142 kW	**46-193841**		CH.Nr.: 4D-1-000 001 ->; without ride height adjustment; Conditions see certificates VA: lowering (expertise): 25 mm; axle load to: 1255 kg HA: lowering (expertise): 25 mm; axle load to: 1230 kg

AUDI				
AUDI Q3				
B1	**2.0 TDI, 2.0 TDI quattro, 2.0 TFSI quattro** 06/11 - 100 -155 kW		**12-226535**	HA: for PR number: UA0/UC3
B6 Offroad	**2.0 TDI, 2.0 TDI quattro, 2.0 TFSI quattro** 06/11 - 100 -155 kW	**35-108177**	**24-146944**	without electronic suspension control VA: Øa: 55 mm
AUDI Q5 (8R)				
B4	**2.0 TDI, 2.0 TDI FWD, 2.0 TFSI, 2.0 TFSI hybrid, 3.0 TDI, 3.2 FSI** 11/08 - 100 -199 kW	**19-171593**	**19-171609**	with standard chassis; without electronic suspension control
B6 Sport	**2.0 TDI, 2.0 TDI FWD, 2.0 TFSI, 2.0 TFSI hybrid, 3.0 TDI, 3.2 FSI** 11/08 - 100 -199 kW	**24-145961**	**24-145978**	
B8	**2.0 TDI, 2.0 TDI FWD, 2.0 TFSI, 2.0 TFSI hybrid, 3.0 TDI, 3.2 FSI** 11/08 - 100 -199 kW	**24-145985**	**24-145992**	
B12 PK	**2.0 TDI, 2.0 TDI FWD, 2.0 TFSI, 2.0 TFSI hybrid, 3.2 FSI** 11/08 - 100 -199 kW	**46-188083**		without electronic suspension control; without ride height adjustment; Conditions see certificates VA: lowering (expertise): 30 mm; axle load to: 1235 kg HA: lowering (expertise): 25 mm; axle load to: 1345 kg
B12 PK	**3.0 TDI** 11/08 - 155 -176 kW	**46-188090**		without electronic suspension control; without ride height adjustment; Conditions see certificates VA: lowering (expertise): 30 mm; axle load to: 1280 kg HA: lowering (expertise): 25 mm; axle load to: 1345 kg
AUDI Q7 (4L)				
B4	**3.0 TDI, 3.0 TDi quattro, 3.6 FSI quattro, 4.2 FSI quattro, 4.2 TDI, 4.2 TDI quattro** 03/07 - 155 -257 kW	i.V. i.V.	**19-194455**	with standard chassis
AUDI R8				
B16 CSC	**4.2 quattro, 4.2 FSI quattro, 5.2 FSI quattro** 04/07 - 309 -412 kW	**48-153690**		without electronic suspension control; Conditions see certificates VA: lowering (expertise): 10-25 mm; axle load to: 940 kg HA: lowering (expertise): 20-35 mm; axle load to: 1095 kg
AUDI R8 Spyder				
B16 CSC	**4.2 FSI quattro, 5.2 FSI quattro** 02/10 - 316 -386 kW	**48-153690**		without electronic suspension control; Conditions see certificates VA: lowering (expertise): 10-25 mm; axle load to: 940 kg HA: lowering (expertise): 20-35 mm; axle load to: 1095 kg
AUDI TT (8N3)				
B1	**1.8 T, 1.8 T quattro, 3.2 VR6 quattro** 10/98 - 06/06 110 -184 kW	**12-116966**		VA: with ball bearing
B3	**1.8 T** 09/02 - 06/06 110 -120 kW	**36-195909**	**36-195985**	with standard chassis
B3	**1.8 T** 09/02 - 06/06 110 -120 kW	**36-195947**	**36-196029**	with sports suspension
B3	**1.8 T** 10/98 - 08/02 132 kW	**36-201365**	**36-195985**	with standard chassis; manual transmission
B3	**1.8 T** 09/02 - 06/06 132 kW	**36-195909**	**36-195985**	with standard chassis; manual transmission
B3	**1.8 T** 10/98 - 08/02 132 kW	**36-201365**	**36-195985**	with standard chassis; automatic transmission
B3	**1.8 T** 09/02 - 06/06 132 kW	**36-195916**	**36-195985**	with standard chassis; automatic transmission

AUDI

AUDI TT (8N3)

B3	**1.8 T** 10/98 - 06/06 132 -140 kW	**36-195923**	**36-195992**	with sports suspension; manual transmission
B3	**1.8 T** 10/98 - 06/06 132 -140 kW	**36-195930**	**36-195992**	with sports suspension; automatic transmission
B3	**1.8 T quattro** 10/98 - 06/06 132 kW	**36-201372**	**36-196036**	with standard chassis
B3	**1.8 T quattro** 10/98 - 06/06 132 -140 kW	**36-195923**	**36-196043**	with sports suspension
B3	**1.8 T** 09/05 - 06/06 140 kW	**36-195909**	**36-195985**	with standard chassis; manual transmission
B3	**1.8 T** 09/05 - 06/06 140 kW	**36-195916**	**36-195985**	with standard chassis; automatic transmission
B3	**1.8 T quattro** 03/05 - 06/06 140 -176 kW	**36-201365**	**36-196036**	with standard chassis
B3	**1.8 T quattro** 10/98 - 06/06 165 -176 kW	**36-195930**	**36-196043**	with sports suspension
B3	**3.2 VR6 quattro** 07/03 - 06/06 184 kW	**36-195978**	**36-196036**	with standard chassis
B3	**3.2 VR6 quattro** 07/03 - 06/06 184 kW	**36-195930**	**36-196050**	with sports suspension
B4	**1.8 T** 10/98 - 06/06 110 -140 kW	**22-145550**	**19-145563**	with standard chassis
B4	**1.8 T quattro, 3.2 VR6 quattro** 10/98 - 06/06 132 -184 kW	**22-145550**	**19-145570**	with standard chassis
B6 Sport	**1.8 T** 10/98 - 06/06 110 -140 kW	**35-046370**	**24-060325**	with standard chassis
B6 Sport	**1.8 T quattro, 3.2 VR6 quattro** 10/98 - 06/06 132 -184 kW	**35-046370**	**24-060349**	with standard chassis
B8	**1.8 T** 10/98 - 06/06 110 -140 kW	**35-046387**	**24-060332**	with sports suspension
B8	**1.8 T quattro, 3.2 VR6 quattro** 10/98 - 06/06 132 -184 kW	**35-046387**	**24-060356**	with sports suspension
B12 PK	**1.8 T** 10/98 - 06/06 110 -140 kW	**46-189592**		Conditions see certificates VA: lowering (expertise): 25 mm; axle load to: 980 kg HA: lowering (expertise): 25 mm; axle load to: 760 kg
B12 PK	**1.8 T quattro** 10/98 - 06/06 132 -176 kW	**46-189608**		Conditions see certificates VA: lowering (expertise): 25 mm; axle load to: 1050 kg HA: lowering (expertise): 25 mm; axle load to: 920 kg
B12 PK	**3.2 VR6 quattro** 07/03 - 06/06 184 kW	**46-189585**		Conditions see certificates VA: lowering (expertise): 25 mm; axle load to: 1100 kg HA: lowering (expertise): 25 mm; axle load to: 920 kg
B14	**1.8 T** 10/98 - 06/06 110 -140 kW	**47-080478**		Conditions see certificates VA: lowering (expertise): 30-50 mm; axle load to: 1040 kg HA: lowering (expertise): 30-50 mm; axle load to: 825 kg
B14	**1.8 T quattro, 3.2 VR6 quattro** 10/98 - 06/06 132 -184 kW	**47-080416**		Conditions see certificates VA: lowering (expertise): 30-50 mm; axle load to: 1110 kg HA: lowering (expertise): 30-50 mm; axle load to: 920 kg
B16 PSS9	**1.8 T** 10/98 - 06/06 110 -140 kW	**48-080484**		Conditions see certificates VA: lowering (expertise): 30-50 mm; axle load to: 1040 kg HA: lowering (expertise): 30-50 mm; axle load to: 825 kg
B16 PSS9	**1.8 T quattro, 3.2 VR6 quattro** 10/98 - 06/06 132 -184 kW	**48-080422**		Conditions see certificates VA: max. load: 1110 kg; lowering (expertise): 30-50 mm HA: max. load: 920 kg; lowering (expertise): 30-50 mm

AUDI				
AUDI TT Roadster (8N9)				
B1	**1.8 T, 1.8 T quattro, 3.2 VR6 quattro** 10/99 - 06/06 110 -184 kW	**12-116966**		VA: with ball bearing
B3	**1.8 T** 01/01 - 06/06 110 -120 kW	**36-195909**	**36-196067**	with standard chassis
B3	**1.8 T** 01/01 - 06/06 110 -120 kW	**36-195947**	**36-196029**	with sports suspension
B3	**1.8 T** 10/99 - 08/02 132 kW	**36-201365**	**36-196067**	with standard chassis; manual transmission
B3	**1.8 T** 09/02 - 06/06 132 kW	**36-195909**	**36-196067**	with standard chassis; manual transmission
B3	**1.8 T** 10/99 - 08/02 132 kW	**36-195893**	**36-196067**	with standard chassis; automatic transmission
B3	**1.8 T** 09/02 - 06/06 132 kW	**36-195916**	**36-196067**	with standard chassis; automatic transmission
B3	**1.8 T** 10/99 - 06/06 132 -140 kW	**36-195923**	**36-195992**	with sports suspension; manual transmission
B3	**1.8 T** 10/99 - 06/06 132 -140 kW	**36-195930**	**36-195992**	with sports suspension; automatic transmission
B3	**1.8 T quattro** 02/00 - 06/06 132 kW	**36-201372**	**36-196036**	with standard chassis
B3	**1.8 T quattro** 02/00 - 06/06 132 -140 kW	**36-195923**	**36-196043**	with sports suspension
B3	**1.8 T** 09/05 - 06/06 140 kW	**36-195909**	**36-196067**	with standard chassis; manual transmission
B3	**1.8 T** 09/05 - 06/06 140 kW	**36-195916**	**36-196067**	with standard chassis; automatic transmission
B3	**1.8 T quattro** 10/99 - 06/06 140 -165 kW	**36-201365**	**36-196036**	with standard chassis
B3	**1.8 T quattro** 10/99 - 06/06 165 kW	**36-195930**	**36-196043**	with sports suspension
B3	**3.2 VR6 quattro** 07/03 - 06/06 184 kW	**36-195978**	**36-196036**	with standard chassis
B3	**3.2 VR6 quattro** 07/03 - 06/06 184 kW	**36-195930**	**36-196050**	with sports suspension
B4	**1.8 T** 10/99 - 06/06 110 -140 kW	**22-145550**	**19-145563**	with standard chassis
B4	**1.8 T quattro, 3.2 VR6 quattro** 10/99 - 06/06 132 -184 kW	**22-145550**	**19-145570**	with standard chassis
B6 Sport	**1.8 T** 10/99 - 06/06 110 -140 kW	**35-046370**	**24-060325**	with standard chassis
B6 Sport	**1.8 T quattro, 3.2 VR6 quattro** 10/99 - 06/06 132 -184 kW	**35-046370**	**24-060349**	with standard chassis
B8	**1.8 T** 10/99 - 06/06 110 -140 kW	**35-046387**	**24-060332**	with sports suspension
B8	**1.8 T quattro, 3.2 VR6 quattro** 10/99 - 06/06 132 -184 kW	**35-046387**	**24-060356**	with sports suspension

AUDI

AUDI TT Roadster (8N9)

B12 PK	**1.8 T** 10/99 - 06/06 110 -140 kW	**46-189578**		Conditions see certificates VA: lowering (expertise): 25 mm; axle load to: 1040 kg HA: lowering (expertise): 25 mm; axle load to: 820 kg
B12 PK	**1.8 T quattro** 10/99 - 06/06 132 -165 kW	**46-189608**		Conditions see certificates VA: lowering (expertise): 25 mm; axle load to: 1050 kg HA: lowering (expertise): 25 mm; axle load to: 920 kg
B12 PK	**3.2 VR6 quattro** 07/03 - 06/06 184 kW	**46-189585**		Conditions see certificates VA: lowering (expertise): 25 mm; axle load to: 1100 kg HA: lowering (expertise): 25 mm; axle load to: 920 kg
B14	**1.8 T** 10/99 - 06/06 110 -140 kW	**47-080478**		Conditions see certificates VA: lowering (expertise): 30-50 mm; axle load to: 1040 kg HA: lowering (expertise): 30-50 mm; axle load to: 825 kg
B14	**1.8 T quattro, 3.2 VR6 quattro** 10/99 - 06/06 132 -184 kW	**47-080416**		Conditions see certificates VA: lowering (expertise): 30-50 mm; axle load to: 1110 kg HA: lowering (expertise): 30-50 mm; axle load to: 920 kg
B16 PSS9	**1.8 T** 10/99 - 06/06 110 -140 kW	**48-080484**		Conditions see certificates VA: lowering (expertise): 30-50 mm; axle load to: 1040 kg HA: lowering (expertise): 30-50 mm; axle load to: 825 kg
B16 PSS9	**1.8 T quattro, 3.2 VR6 quattro** 10/99 - 06/06 132 -184 kW	**48-080422**		Conditions see certificates VA: lowering (expertise): 30-50 mm; axle load to: 1110 kg HA: lowering (expertise): 30-50 mm; axle load to: 920 kg

AUDI TT (8J3)

B1	**1.8 TFSI, 2.0 quattro, 2.0 TFSI** 08/06 - 118 -195 kW	**12-224074**	**12-226535**	VA: with ball bearing HA: for PR number: 1BA/1BV/1BL/1BQ
B1	**2.0 TDI quattro, 2.0 TFSI, 2.0 TFSI quattro** 06/08 - 125 -155 kW	**12-224098**	**12-226535**	VA: with ball bearing; with standard chassis; for PR number: 1BA HA: for PR number: 1BA/1BV/1BL/1BQ
B4	**1.8 TFSI, 2.0 quattro, 2.0 TDI quattro, 2.0 TFSI, 2.0 TFSI quattro** 05/08 - 118 -200 kW	**22-170071**	**19-170084**	with standard chassis; without sport chassis
B6 Sport	**1.8 TFSI, 2.0 quattro, 2.0 TDI quattro, 2.0 TFSI, 2.0 TFSI quattro, 3.2 V6 quattro** 03/07 - 118 -200 kW	**35-136811**	**24-136822**	without Magnetic Ride
B8	**1.8 TFSI, 2.0 quattro, 2.0 TDI quattro, 2.0 TFSI, 2.0 TFSI quattro, 2.5 TFSI quattro, 3.2 V6 quattro, 2.0 TFSI quattro, 2.5 TFSI quattro, 3.2 V6 quattro** 03/07 - 118 -265 kW	**35-136835**	**24-136846**	without Magnetic Ride
B12 PK	**1.8 TFSI, 2.0 TFSI** 08/06 - 118 -155 kW	**46-189615**		without Magnetic Ride; Conditions see certificates VA: lowering (expertise): 25 mm; axle load to: 1005 kg HA: lowering (expertise): 20 mm; axle load to: 785 kg
B12 PK	**3.2 V6 quattro** 08/06 - 06/10 184 kW	**46-189622**		without Magnetic Ride; Conditions see certificates VA: lowering (expertise): 25 mm; axle load to: 1040 kg HA: lowering (expertise): 20 mm; axle load to: 885 kg
B12 PK	**2.0 TDI quattro, 2.0 TFSI quattro** 05/08 - 125 -200 kW	**46-189653**		without Magnetic Ride; Conditions see certificates VA: lowering (expertise): 25 mm; axle load to: 1005 kg HA: lowering (expertise): 20 mm; axle load to: 885 kg
B14	**1.8 TFSI, 2.0 quattro, 2.0 TDI quattro, 2.0 TFSI, 2.0 TFSI quattro, 2.5 TFSI quattro, 3.2 V6 quattro** 08/06 - 118 -265 kW	**47-138896**		without Magnetic Ride; Conditions see certificates VA: lowering (expertise): 20-40 mm; axle load to: 1040 kg HA: lowering (expertise): 20-40 mm; axle load to: 1040 kg
B16 PSS10	**1.8 TFSI, 2.0 quattro, 2.0 TDI quattro, 2.0 TFSI, 2.0 TFSI quattro, 2.5 TFSI quattro, 3.2 V6 quattro** 08/06 - 118 -265 kW	**48-138864**		without Magnetic Ride; Conditions see certificates VA: lowering (expertise): 20-40 mm; axle load to: 1040 kg HA: lowering (expertise): 20-40 mm; axle load to: 1040 kg

AUDI TT Roadster (8J9)

B1	**1.8 TFSI, 2.0 TFSI** 03/07 - 118 -147 kW	**12-224074**	**12-226535**	VA: with ball bearing HA: for PR number: 1BA/1BV/1BL/1BQ

AUDI				
AUDI TT Roadster (8J9)				
B1	**2.0 quattro** 05/08 - 195 kW	**12-224098**	**12-226535**	VA: with ball bearing HA: for PR number: 1BA/1BV/1BL/1BQ
B1	**2.0 TDI quattro** 06/08 - 125 kW	**12-224098**	**12-226535**	VA: with ball bearing; with standard chassis; for PR number: 1BA HA: for PR number: 1BA/1BV/1BL/1BQ
B4	**1.8 TFSI, 2.0 quattro, 2.0 TDI quattro, 2.0 TFSI, 2.0 TFSI quattro, 3.2 V6 quattro** 03/07 - 118 -200 kW	**22-170071**	**19-170084**	with standard chassis; without sport chassis
B6 Sport	**1.8 TFSI, 2.0 quattro, 2.0 TDI quattro, 2.0 TFSI, 2.0 TFSI quattro** 05/08 - 118 -200 kW	**35-136811**	**24-136822**	without Magnetic Ride
B8	**1.8 TFSI, 2.0 quattro, 2.0 TDI quattro, 2.0 TFSI, 2.0 TFSI quattro** 03/07 - 118 -195 kW	**35-136835**	**24-136846**	without Magnetic Ride
B12 PK	**1.8 TFSI, 2.0 TFSI** 03/07 - 118 -147 kW	**46-189639**		without Magnetic Ride; Conditions see certificates VA: lowering (expertise): 25 mm; axle load to: 1005 kg HA: lowering (expertise): 20 mm; axle load to: 785 kg
B12 PK	**3.2 V6 quattro** 03/07 - 06/10 184 kW	**46-189646**		without Magnetic Ride; Conditions see certificates VA: lowering (expertise): 25 mm; axle load to: 1040 kg HA: lowering (expertise): 20 mm; axle load to: 885 kg
B12 PK	**2.0 TDI quattro, 2.0 TFSI, 2.0 TFSI quattro** 05/08 - 125 -200 kW	**46-189653**		without Magnetic Ride; Conditions see certificates VA: lowering (expertise): 25 mm; axle load to: 1005 kg HA: lowering (expertise): 20 mm; axle load to: 885 kg
B14	**1.8 TFSI, 2.0 quattro, 2.0 TDI quattro, 2.0 TFSI, 2.0 TFSI quattro, 2.5 TFSI quattro, 3.2 V6 quattro** 03/07 - 118 -250 kW	**47-138896**		without Magnetic Ride; Conditions see certificates VA: lowering (expertise): 30-50 mm; axle load to: 1040 kg HA: lowering (expertise): 30-50 mm; axle load to: 1040 kg
B16 PSS10	**1.8 TFSI, 2.0 quattro, 2.0 TDI quattro, 2.0 TFSI, 2.0 TFSI quattro, 2.5 TFSI quattro, 3.2 V6 quattro** 03/07 - 118 -250 kW	**48-138864**		without Magnetic Ride; Conditions see certificates VA: lowering (expertise): 30-50 mm; axle load to: 1040 kg HA: lowering (expertise): 30-50 mm; axle load to: 1040 kg
AUDI 50 (86)				
B1	**0.8, 1.1, 1.3** 08/74 - 07/78 25 -44 kW	**12-117383**		
B3	**0.8, 1.1, 1.3** 08/74 - 07/78 25 -44 kW	*36-134151*	**36-131051**	with standard chassis
B4	**0.8, 1.1, 1.3** 08/74 - 07/78 25 -44 kW	**21-030345**	**19-019642** **11-101390** SP	
B6 Sport	**0.8, 1.1, 1.3** 08/74 - 07/78 25 -44 kW	**34-000175**	**24-181495**	
B8	**0.8, 1.1, 1.3** 08/74 - 07/78 25 -44 kW	**34-030011**	**24-016193**	
AUDI 60				
B6 Sport	**1.5** 09/68 - 08/72 40 -48 kW	**24-181853**	*24-633116*	
AUDI 80 (80, 82, B1)				
B2	**1.3, 1.5, 1.6** 05/72 - 07/78 40 -63 kW	**16-031296** **11-101307** SP		with standard chassis VA: Øa: 50 mm
B3	**1.3, 1.5, 1.6** 05/72 - 07/78 40 -63 kW	*36-160372*	**36-160327**	with standard chassis

AUDI				
AUDI 80 (80, 82, B1)				
B4	**1.3, 1.5, 1.6, 1.6 GT** 05/72 - 07/78 40 -74 kW	**21-030406** **11-101307** SP		with standard chassis VA: Øa: 50 mm
B6 Sport	**1.3, 1.5, 1.6, 1.6 GT, 1.6 GTE** 05/72 - 07/78 40 -81 kW	**34-030059**		VA: Øa: 50 mm
AUDI 80 (81, 85, B2)				
B1	**1.3, 1.6, 1.6 D, 1.6 GLE, 1.6 TD, 1.8, 1.8 CC quattro, 1.8 GTE, 1.8 GTE quattro, 1.9 CD-5S, 2.0, 2.0 quattro, 2.2, 2.2 quattro** 08/78 - 07/84 40 -100 kW	**12-116768**		VA: Thickness: 37 mm; Øi: 14 mm; with ball bearing
B1	**1.3, 1.6, 1.6 D, 1.6 GLE, 1.6 TD, 1.8, 1.8 CC quattro, 1.8 GTE, 1.8 GTE quattro, 1.9 CD-5S, 2.0, 2.0 quattro, 2.2, 2.2 quattro** 08/78 - 07/84 40 -100 kW	**12-117475**		VA: Thickness: 41 mm; Øi: 14 mm
B2	**1.3, 1.6, 1.6 D, 1.6 GLE, 1.6 TD, 1.8, 1.9 CD-5S, 2.0, 2.2** 08/78 - 07/83 40 -85 kW	**16-031296** **11-101307** SP	**15-062185**	with standard chassis VA: Øa: 50 mm
B2	**1.8 GTE** 10/84 - 08/86 81 -82 kW	**16-031296** **11-101307** SP		with standard chassis VA: Øa: 50 mm
B3	**1.3** 09/78 - 07/86 40 -44 kW	*36-134298*	**36-130979**	with standard chassis
B3	**1.3, 1.6, 1.6 D, 1.6 TD, 1.8, 1.8 GTE** 08/78 - 08/86 40 -82 kW	*36-160341*	**36-160310**	with standard chassis; Heavy Duty Version .
B3	**1.6, 1.6 D, 1.6 GLE, 1.8, 1.8 GTE** 08/78 - 08/86 40 -82 kW	**36-130962**	**36-130979**	with standard chassis
B3	**1.6 TD** 08/81 - 05/86 51 kW	*36-134397*	**36-130979**	with standard chassis
B4	**1.3, 1.6, 1.6 D, 1.6 GLE, 1.6 TD, 1.8, 1.9 CD-5S, 2.0, 2.2** 08/78 - 07/83 40 -85 kW	**21-030406** **11-101307** SP	**19-019680**	with standard chassis VA: Øa: 50 mm
B4	**1.8 CC quattro, 1.8 GTE quattro, 2.0 quattro, 2.2 quattro** 08/82 - 08/86 66 -100 kW	**21-030406** **11-101307** SP		with standard chassis VA: Øa: 50 mm
B4	**1.8 GTE** 10/84 - 08/86 81 -82 kW	**21-030406** **11-101307** SP		with standard chassis VA: Øa: 50 mm
B6 Sport	**1.3, 1.6, 1.6 D, 1.6 GLE, 1.6 TD, 1.8, 1.8 GTE, 2.0, 2.2** 09/79 - 07/83 40 -85 kW	**34-030059**	**24-020510**	VA: Øa: 50 mm
B6 Sport	**1.8 CC quattro, 1.8 GTE quattro, 2.0 quattro, 2.2 quattro** 08/82 - 08/86 66 -100 kW	**34-030165**	**34-030172**	VA: Øa: 55 mm HA: Øa: 55 mm
B6 Sport	**1.8 CC quattro, 1.8 GTE quattro, 2.0 quattro, 2.2 quattro** 08/82 - 08/86 66 -100 kW	**34-030059**	**34-030172**	VA: Øa: 50 mm HA: Øa: 55 mm
B8	**1.3, 1.6, 1.6 D, 1.6 GLE, 1.6 TD, 1.8, 1.8 GTE, 2.0, 2.2** 09/79 - 07/83 40 -85 kW	**34-030066**	**24-020503**	VA: Øa: 50 mm

AUDI				
AUDI COUPE (81, 85)				
B1	**1.6, 1.8, 1.8 GT, 1.8 GT quattro, 1.9, 2.0, 2.1 GT, 2.2 quattro, 2.2 GT, 2.3, 2.3 quattro** 07/80 - 10/88 55 -100 kW	**12-116768**		VA: Thickness: 37 mm; Øi: 14 mm; with ball bearing
B1	**1.6, 1.8, 1.8 GT, 1.8 GT quattro, 1.9, 2.0, 2.1 GT, 2.2 quattro, 2.2 GT, 2.3, 2.3 quattro** 07/80 - 10/88 55 -100 kW	**12-117475**		VA: Thickness: 41 mm; Øi: 14 mm
B2	**1.6, 1.8, 1.8 GT, 1.9, 2.0, 2.1 GT, 2.2 GT, 2.3** 07/80 - 10/88 55 -100 kW	**16-031296** **11-101307** SP	**15-062185**	with standard chassis VA: Øa: 50 mm
B3	**1.6, 1.8, 1.8 GT** 07/80 - 10/88 55 -82 kW	**36-130962**	**36-130979**	with standard chassis
B3	**1.6, 1.8, 1.8 GT** 07/80 - 10/88 55 -82 kW	*36-160341*	**36-160310**	with standard chassis; Heavy Duty Version .
B4	**1.6, 1.8, 1.8 GT, 1.9, 2.0, 2.1 GT, 2.2 GT, 2.3** 07/80 - 10/88 55 -100 kW	**21-030406** **11-101307** SP	**19-019680** **11-101345** SP	with standard chassis VA: Øa: 50 mm
B6 Sport	**1.8, 1.8 GT, 1.9, 2.0, 2.1 GT, 2.2 GT, 2.3** 01/82 - 10/88 55 -100 kW	**34-030059**	**24-020510**	VA: Øa: 50 mm
B6 Sport	**1.8 GT quattro, 2.2 quattro, 2.3 quattro** 10/84 - 10/88 66 -100 kW	**34-030165**	**34-030172**	VA: Øa: 55 mm HA: Øa: 55 mm
B6 Sport	**1.8 GT quattro, 2.2 quattro, 2.3 quattro** 10/84 - 10/88 66 -100 kW	**34-030059**	**34-030172**	VA: Øa: 50 mm HA: Øa: 55 mm
B8	**1.8, 1.8 GT, 1.9, 2.0, 2.1 GT, 2.2 GT, 2.3** 01/82 - 10/88 55 -100 kW	**34-030066**	**24-020503**	VA: Øa: 50 mm
AUDI QUATTRO (85)				
B3	**2.1 quattro, 2.1 Turbo, 2.2 quattro** 07/80 - 07/89 89 -147 kW	**36-130740**	**36-155002**	with standard chassis
B4	**2.1 quattro, 2.1 20V Turbo, 2.1 Turbo, 2.2 quattro, 2.2 20V, 2.2 Turbo** 07/80 - 07/91 89 -225 kW	**21-030406** **11-101307** SP		with standard chassis VA: Øa: 50 mm
B4	**2.1 quattro, 2.1 20V Turbo, 2.1 Turbo, 2.2 quattro, 2.2 20V, 2.2 Turbo** 07/80 - 07/91 89 -225 kW	**21-030444** **11-101307** SP		with sports suspension VA: Øa: 50 mm
B6 Sport	**2.1 quattro, 2.1 20V Turbo, 2.1 Turbo, 2.2 quattro, 2.2 20V, 2.2 Turbo** 07/80 - 07/91 89 -225 kW	**34-030165**	**34-030172**	VA: Øa: 55 mm HA: Øa: 55 mm
B6 Sport	**2.1 quattro, 2.1 20V Turbo, 2.1 Turbo, 2.2 quattro, 2.2 20V, 2.2 Turbo** 07/80 - 07/91 89 -225 kW	**34-030059**	**34-030172**	VA: Øa: 50 mm HA: Øa: 55 mm
AUDI 80 (89, 89Q, 8A, B3)				
B1	**1.4, 1.6, 1.6 D, 1.6 TD, 1.8, 1.8 quattro, 1.8 E, 1.8 E quattro, 1.8 S, 1.8 S quattro, 1.9 D, 2.0, 2.0 quattro, 2.0 E, 2.0 E 16V, 2.0 E 16V quattro, 2.0 E quattro, 2.3 quattro** 06/86 - 07/89 40 -101 kW	**12-116768**		VA: Thickness: 37 mm; Øi: 14 mm; with ball bearing

AUDI				
AUDI 80 (89, 89Q, 8A, B3)				
B1	**1.4, 1.6, 1.6 D, 1.6 TD, 1.8, 1.8 quattro, 1.8 E, 1.8 E quattro, 1.8 S, 1.8 S quattro, 1.9 D, 2.0, 2.0 quattro, 2.0 E, 2.0 E 16V, 2.0 E 16V quattro, 2.0 E quattro, 2.3 quattro** 06/86 - 07/89 40 -101 kW	**12-117475**		VA: Thickness: 41 mm; Øi: 14 mm
B2	**1.6, 1.6 D, 1.6 TD, 1.8, 1.8 E, 1.8 S, 1.9 D, 2.0, 2.0 E, 2.0 E 16V** 09/86 - 10/91 40 -101 kW	**16-031296** **11-101307** SP	**15-062185**	with standard chassis VA: Øa: 50 mm
B3	**1.6, 1.6 D, 1.6 TD, 1.8, 1.8 S, 1.9 D** 09/86 - 10/91 40 -66 kW	**36-130740**	**36-130771**	with standard chassis
B3	**1.6, 1.6 D, 1.6 TD, 1.8, 1.8 S, 1.9 D** 09/86 - 10/91 40 -66 kW		**36-155019**	with standard chassis; Heavy Duty Version .
B4	**1.6, 1.6 D, 1.6 TD, 1.8, 1.8 E, 1.8 S, 1.9 D, 2.0, 2.0 E, 2.0 E 16V** 09/86 - 10/91 40 -101 kW	**21-030406** **11-101307** SP	**19-019680** **11-101345** SP	with standard chassis VA: Øa: 50 mm
B4	**1.6, 1.6 D, 1.6 TD, 1.8, 1.8 E, 1.8 S, 1.9 D, 2.0, 2.0 E, 2.0 E 16V** 09/86 - 10/91 40 -101 kW	**21-030444** **11-101307** SP	**19-019307**	with sports suspension VA: Øa: 50 mm
B4	**1.8 quattro, 1.8 E quattro, 1.8 S quattro, 2.0 quattro, 2.0 E 16V quattro, 2.0 E quattro, 2.3 quattro** 09/86 - 09/90 65 -101 kW	**21-030444** **11-101307** SP		VA: Øa: 50 mm
B6 Sport	**1.4, 1.6, 1.6 D, 1.6 TD, 1.8, 1.8 E, 1.8 S, 1.9 D, 2.0, 2.0 E, 2.0 E 16V** 06/86 - 09/91 40 -101 kW	**34-030059**	**24-020510**	with standard chassis VA: Øa: 50 mm
B6 Sport	**1.8 quattro, 1.8 E quattro, 1.8 S quattro, 2.0 quattro, 2.0 E 16V quattro, 2.0 E quattro, 2.3 quattro** 09/86 - 09/90 65 -101 kW	**34-030059**	**34-030172**	VA: Øa: 50 mm HA: Øa: 55 mm
B8	**1.4, 1.6, 1.6 D, 1.6 TD, 1.8, 1.8 E, 1.8 S, 1.9 D, 2.0, 2.0 E, 2.0 E 16V** 06/86 - 09/91 40 -101 kW	**34-030066**	**24-020503**	without sport chassis VA: Øa: 50 mm
B8	**1.8 quattro, 1.8 E quattro, 1.8 S quattro, 2.0 quattro, 2.0 E 16V quattro, 2.0 E quattro, 2.3 quattro** 09/86 - 09/90 65 -101 kW	**34-030066**	**34-030585**	VA: Øa: 50 mm HA: Øa: 55 mm
AUDI COUPE (89, 8B)				
B1	**1.8, 2.0, 2.0 16 V, 2.0 20 V, 2.0 20 V quattro, 2.2 quattro, 2.3, 2.3 quattro, 2.3 20V, 2.3 20V quattro, 2.6, 2.6 quattro, 2.8, 2.8 quattro** 11/88 - 12/96 82 -128 kW	**12-116768**		VA: Thickness: 37 mm; Øi: 14 mm; with ball bearing
B1	**1.8, 2.0, 2.0 16 V, 2.0 20 V, 2.0 20 V quattro, 2.2 quattro, 2.3, 2.3 quattro, 2.3 20V, 2.3 20V quattro, 2.6, 2.6 quattro, 2.8, 2.8 quattro** 11/88 - 12/96 82 -128 kW	**12-117475**		VA: Thickness: 41 mm; Øi: 14 mm
B3	**1.8, 2.0, 2.0 16 V** 05/89 - 12/96 82 -103 kW	**36-130740**	**36-130771**	with standard chassis
B3	**1.8, 2.0, 2.0 16 V** 05/89 - 12/96 82 -103 kW		**36-155019**	with standard chassis; Heavy Duty Version .

AUDI				
AUDI COUPE (89, 8B)				
B3	**2.0 20 V, 2.0 20 V quattro, 2.2 quattro, 2.3, 2.3 quattro, 2.3 20V, 2.3 20V quattro, 2.6, 2.6 quattro, 2.8, 2.8 quattro** 11/88 - 12/96 98 -128 kW	**36-130740**	**36-155002**	with standard chassis
B4	**1.8, 2.0, 2.0 16 V, 2.0 20 V, 2.3, 2.3 20V, 2.6, 2.8** 10/88 - 12/96 82 -128 kW	**21-030444** **11-101307** SP	**19-019307**	VA: Øa: 50 mm
B4	**2.0 20 V quattro, 2.2 quattro, 2.3 quattro, 2.3 20V quattro, 2.6 quattro, 2.8 quattro** 11/88 - 12/96 98 -128 kW	**21-030444** **11-101307** SP		with standard chassis VA: Øa: 50 mm
B6 Sport	**1.8, 2.0, 2.0 16 V, 2.0 20 V, 2.3, 2.3 20V, 2.6, 2.8** 10/88 - 12/96 82 -128 kW	**34-030059**	**24-020510**	VA: Øa: 50 mm
B6 Sport	**2.0 20 V quattro, 2.2 quattro, 2.3 quattro, 2.3 20V quattro, 2.6 quattro, 2.8 quattro** 11/88 - 12/96 98 -128 kW	**34-030059**	**34-030172**	VA: Øa: 50 mm HA: Øa: 55 mm
B6 Sport	**S2 quattro** 09/90 - CH-Nr. 162 -169 kW	**34-030059**	**34-030172**	-> CH.Nr.: 8A-N-200 000 VA: Øa: 50 mm HA: Øa: 55 mm
B6 Sport	**S2 quattro** 09/90 - CH-Nr. 162 -169 kW	**34-030868**	**34-030172**	-> CH.Nr.: 8A-N-200 000 VA: Øa: 55 mm HA: Øa: 55 mm
B8	**1.8, 2.0, 2.0 16 V, 2.0 20 V, 2.3, 2.3 20V, 2.6, 2.8** 10/88 - 12/96 82 -128 kW	**34-030066**	**24-020503**	VA: Øa: 50 mm
B8	**2.0 20 V quattro, 2.2 quattro, 2.3 quattro, 2.3 20V quattro, 2.6 quattro, 2.8 quattro** 11/88 - 12/96 98 -128 kW	**34-030066**	**34-030585**	VA: Øa: 50 mm HA: Øa: 55 mm
B8	**S2 quattro** 09/90 - CH-Nr. 162 -169 kW	**34-030066**	**34-030585**	-> CH.Nr.: 8A-N-200 000; axle strut housing with external thread M52x1,5 VA: Øa: 50 mm HA: Øa: 55 mm
AUDI CABRIOLET (8G7, B4)				
B1	**1.8, 1.9 TDI, 2.0 16V, 2.0 E, 2.3 E, 2.6, 2.8** 11/92 - 08/00 66 -128 kW	**12-116768**		VA: Thickness: 37 mm; Øi: 14 mm; with ball bearing
B1	**1.8, 1.9 TDI, 2.0 16V, 2.0 E, 2.3 E, 2.6, 2.8** 11/92 - 08/00 66 -128 kW	**12-117475**		VA: Thickness: 41 mm; Øi: 14 mm
B3	**1.8, 1.9 TDI, 2.0 E** 01/93 - 08/00 66 -92 kW		**36-219902**	with standard chassis
B3	**2.3 E** 05/91 - 07/94 98 kW	**36-195787**	**36-219902**	with standard chassis; without AC; manual transmission
B3	**2.6, 2.8** 11/92 - 08/00 110 -128 kW	**36-195794**	**36-219902**	with standard chassis; with AC; manual transmission
B3	**2.6, 2.8** 11/92 - 08/00 110 -128 kW	**36-195794**	**36-219902**	with standard chassis; without AC; automatic transmission
B4	**1.8, 1.9 TDI, 2.0 16V, 2.0 E, 2.3 E, 2.6, 2.8** 11/92 - 08/00 66 -128 kW	**21-030444** **11-101307** SP	**19-028873**	with standard chassis VA: Øa: 50 mm
B6 Sport	**1.8, 1.9 TDI, 2.0 16V, 2.0 E, 2.3 E, 2.6, 2.8** 11/92 - 08/00 66 -128 kW	**34-030059**	**24-018449**	VA: Øa: 50 mm

AUDI

AUDI CABRIOLET (8G7, B4)

B8	**1.8, 1.9 TDI, 2.0 16V, 2.0 E, 2.3 E, 2.6, 2.8** 11/92 - 08/00 66 -128 kW	**34-030066**	**24-018432**	VA: Øa: 50 mm
B12 PK	**1.8, 1.9 TDI, 2.0 16V, 2.0 E, 2.3 E** 05/91 - 08/00 66 -103 kW	**46-189806**		outside diameter strut 50 mm; Conditions see certificates VA: lowering (expertise): 20 mm; axle load to: 1100 kg HA: lowering (expertise): 20 mm; axle load to: 870 kg
B12 PK	**2.6, 2.8** 11/92 - 08/00 102 -128 kW	**46-189813**		outside diameter strut 50 mm; Conditions see certificates VA: lowering (expertise): 20 mm; axle load to: 1100 kg HA: lowering (expertise): 20 mm; axle load to: 870 kg

AUDI 80 (8C, B4)

B1	**1.6, 1.6 E, 1.9 TD, 1.9 TDI, 2.0, 2.0 quattro, 2.0 E, 2.0 E 16V, 2.0 E 16V quattro, 2.0 E quattro, 2.3 E, 2.3 E quattro, 2.6, 2.6 quattro, 2.8, 2.8 quattro, S2 quattro** 09/91 - 12/94 52 -169 kW	**12-116768**		VA: Thickness: 37 mm; Øi: 14 mm; with ball bearing
B1	**1.6, 1.6 E, 1.9 TD, 1.9 TDI, 2.0, 2.0 quattro, 2.0 E, 2.0 E 16V, 2.0 E 16V quattro, 2.0 E quattro, 2.3 E, 2.3 E quattro, 2.6, 2.6 quattro, 2.8, 2.8 quattro, S2 quattro** 09/91 - 12/94 52 -169 kW	**12-117475**		VA: Thickness: 41 mm; Øi: 14 mm
B2	**1.6, 1.6 E, 1.9 TD, 1.9 TDI, 2.0, 2.0 E, 2.0 E 16V, 2.3 E, 2.6, 2.8** 09/91 - 12/94 52 -128 kW	**16-031319** **11-101307** SP	**15-062178**	with standard chassis VA: Øa: 50 mm
B3	**1.6, 1.6 E, 2.0, 2.0 E, 2.0 E 16V, 2.3 E** 09/91 - 12/94 52 -103 kW	**36-130672**	**36-130986**	with standard chassis
B3	**1.6, 1.6 E, 1.9 TD, 1.9 TDI, 2.0, 2.0 E, 2.0 E 16V, 2.3 E, 2.6, 2.8** 09/91 - 12/94 52 -128 kW	**36-133062**	**36-130993**	with standard chassis; Heavy Duty Version .
B3	**1.9 TD, 1.9 TDI, 2.6, 2.8** 09/91 - 12/94 55 -128 kW	**36-130689**	**36-130986**	with standard chassis
B4	**1.6, 1.6 E, 1.9 TD, 1.9 TDI, 2.0, 2.0 E, 2.0 E 16V, 2.3 E, 2.6, 2.8** 09/91 - 12/94 52 -128 kW	**21-030444** **11-101307** SP	**19-019673**	with standard chassis VA: Øa: 50 mm
B4	**1.6, 1.6 E, 1.9 TD, 1.9 TDI, 2.0, 2.0 E, 2.0 E 16V, 2.3 E, 2.6, 2.8** 09/91 - 12/94 52 -128 kW	**21-030444** **11-101307** SP	**19-029184**	with sports suspension VA: Øa: 50 mm
B4	**2.0 quattro, 2.0 E 16V quattro, 2.0 E quattro, 2.3 E quattro, 2.6 quattro, 2.8 quattro, S2 quattro** 02/93 - 12/94 79 -169 kW	**21-030444** **11-101307** SP		VA: Øa: 50 mm
B6 Sport	**2.0 quattro, 2.0 E 16V quattro, 2.0 E quattro, 2.3 E quattro, 2.6 quattro, 2.8 quattro, S2 quattro** 02/93 - 12/94 79 -169 kW	**34-030868**	**24-062121**	VA: Øa: 55 mm
B6 Sport	**2.0 quattro, 2.0 E 16V quattro, 2.0 E quattro, 2.3 E quattro, 2.6 quattro, 2.8 quattro** 09/91 - 12/94 79 -128 kW	**34-030059**	**24-062121**	VA: Øa: 50 mm
B8	**1.6, 1.6 E, 1.9 TD, 1.9 TDI, 2.0, 2.0 E, 2.0 E 16V, 2.3 E, 2.6, 2.8** 09/91 - 12/94 52 -128 kW	**34-030066**	*24-016964*	VA: Øa: 50 mm
B8	**S2 quattro** 02/93 - 12/94 169 kW	**34-030868**	**24-062145**	VA: Øa: 55 mm

AUDI				
AUDI 80 Avant (8C, B4)				
B1	**1.6 E, 1.9 TD, 1.9 TDI, 2.0, 2.0 E, 2.0 E 16V, 2.3 E, 2.6, 2.8** 09/91 - 01/96 55 -128 kW	**12-116768**		VA: Thickness: 37 mm; Øi: 14 mm; with ball bearing
B1	**1.6 E, 1.9 TD, 1.9 TDI, 2.0, 2.0 E, 2.0 E 16V, 2.3 E, 2.6, 2.8** 09/91 - 01/96 55 -128 kW	**12-117475**		VA: Thickness: 41 mm; Øi: 14 mm
B2	**1.6 E, 1.9 TD, 1.9 TDI, 2.0, 2.0 E, 2.0 E 16V, 2.3 E, 2.6, 2.8** 09/91 - 01/96 55 -128 kW	**16-031319** **11-101307** SP	**15-062178**	VA: Øa: 50 mm
B3	**1.6 E, 2.0, 2.0 E, 2.0 E 16V, 2.3 E** 07/92 - 01/96 66 -103 kW	**36-154999**	**36-130993**	with standard chassis
B3	**1.6 E, 1.9 TD, 1.9 TDI, 2.0, 2.0 E, 2.0 E 16V, 2.3 E, 2.6, 2.8** 09/91 - 01/96 55 -128 kW	**36-133062**	**36-155071**	with standard chassis; Heavy Duty Version .
B3	**1.9 TD, 1.9 TDI, 2.6, 2.8** 09/91 - 01/96 55 -128 kW	**36-130689**	**36-130993**	with standard chassis
B4	**1.6 E, 1.9 TD, 1.9 TDI, 2.0, 2.0 E, 2.0 E 16V, 2.3 E, 2.6, 2.8** 09/91 - 01/96 55 -128 kW	**21-030444** **11-101307** SP	**19-019673**	with standard chassis VA: Øa: 50 mm
B4	**2.0 E 16V quattro, 2.3 E quattro, 2.6 quattro, 2.8 quattro, RS2 quattro, S2 quattro** 08/92 - 07/95 98 -232 kW	**21-030444** **11-101307** SP		VA: Øa: 50 mm
B6 Sport	**2.0 E 16V quattro, 2.3 E quattro, 2.6 quattro, 2.8 quattro, RS2 quattro, S2 quattro** 08/92 - 07/95 98 -232 kW	**34-030868**	**24-062121**	VA: Øa: 55 mm
B6 Sport	**2.0 E 16V quattro, 2.3 E quattro, 2.6 quattro, 2.8 quattro** 08/92 - 07/95 98 -128 kW	**34-030059**	**24-062121**	VA: Øa: 50 mm
B8	**1.6 E, 1.9 TD, 1.9 TDI, 2.0, 2.0 E, 2.0 E 16V, 2.3 E, 2.6, 2.8** 01/92 - 01/96 55 -128 kW	**34-030066**	*24-016964*	VA: Øa: 50 mm
B8	**RS2 quattro, S2 quattro** 02/93 - 07/95 169 -232 kW	**34-030868**	**24-062145**	VA: Øa: 55 mm
AUDI 90 (81, 85, B2)				
B1	**1.6 TD, 2.0, 2.0 quattro, 2.2, 2.2 E quattro** 11/84 - 03/87 51 -100 kW	**12-116768**		VA: Thickness: 37 mm; Øi: 14 mm; with ball bearing
B1	**1.6 TD, 2.0, 2.0 quattro, 2.2, 2.2 E quattro** 11/84 - 03/87 51 -100 kW	**12-117475**		VA: Thickness: 41 mm; Øi: 14 mm
B2	**1.6 TD, 2.0, 2.2** 01/85 - 03/87 51 -100 kW	**16-031319** **11-101307** SP	**15-062185**	with standard chassis VA: Øa: 50 mm
B3	**1.6 TD, 2.0, 2.2** 01/85 - 03/87 51 -100 kW	*36-134397*	**36-130979**	with standard chassis
B4	**2.0 quattro, 2.2 E quattro** 08/84 - 03/87 85 -100 kW	**21-030406** **11-101307** SP		with standard chassis VA: Øa: 50 mm
B4	**1.6 TD, 2.0, 2.2** 01/85 - 03/87 51 -100 kW	**21-030444** **11-101307** SP	**19-019680** **11-101345** SP	with standard chassis VA: Øa: 50 mm
B4	**1.6 TD, 2.0, 2.2** 01/85 - 03/87 51 -100 kW	**21-030444** **11-101307** SP	**19-019307**	with sports suspension VA: Øa: 50 mm

AUDI				
AUDI 90 (81, 85, B2)				
B6 Sport	**2.0 quattro, 2.2 E quattro** 08/84 - 03/87 85 -100 kW	**34-030165**	**34-030172**	VA: Øa: 55 mm HA: Øa: 55 mm
B6 Sport	**2.0 quattro, 2.2 E quattro** 08/84 - 03/87 85 -100 kW	**34-030059**	**34-030172**	VA: Øa: 50 mm HA: Øa: 55 mm
B6 Sport	**1.6 TD, 2.0, 2.2** 01/85 - 09/86 51 -100 kW	**34-030059**	**24-020510**	VA: Øa: 50 mm
B8	**1.6 TD, 2.0, 2.2** 01/85 - 09/86 51 -100 kW	**34-030066**	**24-020503**	VA: Øa: 50 mm
AUDI 90 (89, 89Q, 8A, B3)				
B1	**1.6 TD, 2.0, 2.0 quattro, 2.0 20 V, 2.0 20 V quattro, 2.2 E, 2.2 E quattro, 2.3 E, 2.3 E 20V, 2.3 E 20V quattro, 2.3 E quattro** 04/87 - 09/91 59 -125 kW	**12-116768**		VA: Thickness: 37 mm; Øi: 14 mm; with ball bearing
B1	**1.6 TD, 2.0, 2.0 quattro, 2.0 20 V, 2.0 20 V quattro, 2.2 E, 2.2 E quattro, 2.3 E, 2.3 E 20V, 2.3 E 20V quattro, 2.3 E quattro** 04/87 - 09/91 59 -125 kW	**12-117475**		VA: Thickness: 41 mm; Øi: 14 mm
B2	**1.6 TD, 2.0, 2.0 20 V, 2.2 E, 2.3 E** 04/87 - 09/91 59 -118 kW	**16-031319** **11-101307** SP	**15-062185**	VA: Øa: 50 mm
B3	**2.0 quattro, 2.0 20 V quattro, 2.2 E quattro, 2.3 E 20V, 2.3 E 20V quattro, 2.3 E quattro** 04/87 - 07/91 98 -125 kW	**36-130740**	**36-155002**	with standard chassis
B3	**1.6 TD, 2.0** 04/87 - 09/91 59 -85 kW	**36-130740**	**36-130771**	with standard chassis
B3	**1.6 TD** 04/87 - 09/91 59 kW		**36-155019**	with standard chassis; Heavy Duty Version .
B4	**2.0 quattro, 2.0 20 V quattro, 2.2 E quattro, 2.3 E 20V quattro, 2.3 E quattro** 04/87 - 07/91 98 -123 kW	**21-030444** **11-101307** SP		with standard chassis VA: Øa: 50 mm
B4	**2.2 E quattro, 2.3 E quattro** 04/87 - 09/91 98 -100 kW	**21-030444** **11-101307** SP		with sports suspension VA: Øa: 50 mm
B4	**2.3 E 20V** 08/88 - 07/91 123 -125 kW	**21-030444** **11-101307** SP	**19-019307**	with standard chassis VA: Øa: 50 mm
B4	**2.3 E 20V quattro** 06/88 - 09/91 125 kW	**21-030444** **11-101307** SP		with standard chassis VA: Øa: 50 mm
B4	**1.6 TD, 2.0, 2.0 20 V, 2.2 E, 2.3 E** 04/87 - 09/91 59 -118 kW	**21-030444** **11-101307** SP	**19-019680** **11-101345** SP	with standard chassis VA: Øa: 50 mm
B4	**1.6 TD, 2.0, 2.0 20 V, 2.2 E, 2.3 E** 04/87 - 09/91 59 -118 kW	**21-030444** **11-101307** SP	**19-019307**	with sports suspension VA: Øa: 50 mm
B6 Sport	**2.0 quattro, 2.0 20 V quattro, 2.2 E quattro, 2.3 E 20V quattro, 2.3 E quattro** 04/87 - 07/91 98 -125 kW	**34-030059**	**34-030172**	VA: Øa: 50 mm HA: Øa: 55 mm
B6 Sport	**2.0, 2.0 20 V, 2.2 E, 2.3 E, 2.3 E 20V** 04/87 - 09/91 85 -125 kW	**34-030059**	**24-020510**	with standard chassis VA: Øa: 50 mm

AUDI				
AUDI 90 (89, 89Q, 8A, B3)				
B8	**2.0 quattro, 2.0 20 V quattro, 2.2 E quattro, 2.3 E 20V quattro, 2.3 E quattro** 04/87 - 07/91 98 -125 kW	**34-030066**	**34-030585**	VA: Øa: 50 mm HA: Øa: 55 mm
B8	**1.6 TD, 2.0, 2.0 20 V, 2.2 E, 2.3 E, 2.3 E 20V** 04/87 - 09/91 59 -125 kW	**34-030066**	**24-020503**	without sport chassis VA: Øa: 50 mm
AUDI 100 (C1)				
B3	**1.8 LS** 10/70 - 07/76 74 kW	*36-160280*		with standard chassis; mark: LS
B6 Sport	**1.6, 1.8, 1.8 LS, 1.9 GL** 08/73 - 08/75 63 -82 kW	*24-632539*	*24-632560*	
B6 Sport	**1.6, 1.8 LS, 1.9 GL** 09/75 - 07/76 63 -82 kW	*24-632614*	*24-632560*	
MS	**1.8, 1.8 LS, 1.9 GL** 07/73 - 07/76 63 -82 kW	*24-632539*	*24-632621*	
AUDI 100 Coupe (C1)				
B3	**1.9** 10/70 - 12/76 82 -85 kW	*36-160280*		with standard chassis; mark: LS
B6 Sport	**1.9** 07/70 - 07/73 82 -85 kW	**24-632164**	**24-632157**	
AUDI 100 (43, C2)				
B1	**1.6, 1.9, 2.0 D, 2.1** 01/80 - 07/82 51 -100 kW	**12-117321**		without sport chassis VA: Material: Rubber/Metal
B2	**1.6, 1.9, 2.0 D** 08/76 - 07/82 51 -74 kW	**16-031289** **11-103943** *SP*		with standard chassis
B3	**1.6** 07/79 - 07/81 63 kW	**36-133109**	**36-133093**	with standard chassis
B3	**1.9, 2.1** 07/79 - 07/81 74 -100 kW	**36-130757**	**36-133093**	with standard chassis
B3	**2.0 D** 07/79 - 07/81 51 kW	**36-133086**	**36-133093**	with standard chassis
B4	**1.6, 1.9, 2.0, 2.0 D, 2.1** 06/76 - 07/82 51 -100 kW	**21-030390** **11-103943** *SP*	*19-019697* **11-101413** *SP*	with standard chassis
B6 Sport	**1.6, 1.9, 2.0 D, 2.1** 08/79 - 07/82 51 -100 kW	**34-003701**		
B6 Sport	**1.6, 2.0, 2.1** 06/76 - 07/79 63 -100 kW	**34-003701**		
AUDI 100 Avant (43, C2)				
B1	**1.6, 1.9, 2.0, 2.0 D, 2.1** 01/80 - 02/83 51 -100 kW	**12-117321**		without sport chassis VA: Material: Rubber/Metal
B3	**1.6, 2.0, 2.1** 07/77 - 07/79 63 -85 kW	*36-160242*	**36-133093**	with standard chassis; mark: L, GL
B3	**1.6, 1.9, 2.0, 2.1** 08/79 - 02/83 63 -100 kW	**36-133109**	**36-133093**	with standard chassis; mark: L, GL

AUDI				
AUDI 100 Avant (43, C2)				
B3	**2.0, 2.1** 07/77 - 07/79 85 -100 kW	**36-160273**	**36-133093**	with standard chassis; mark: S, LS, GLS
B3	**2.0, 2.0 D, 2.1** 07/77 - 07/79 51 -100 kW	**36-160266**	**36-133093**	with standard chassis; mark: 5E, 5S, L5E, Diesel
B3	**2.0, 2.1** 08/79 - 02/83 85 -100 kW	**36-130757**	**36-133093**	with standard chassis; mark: GLS, 5-Zyl.
B3	**2.0 D** 08/79 - 02/83 51 kW	**36-133086**	**36-133093**	with standard chassis
B4	**1.6, 1.9, 2.0, 2.0 D, 2.1** 07/77 - 02/83 51 -100 kW	**21-030390** **11-103943** SP	*19-019697* **11-101413** SP	with standard chassis
B6 Sport	**1.6, 2.0, 2.0 D, 2.1** 07/77 - 07/79 51 -100 kW	**34-003701**		
B6 Sport	**1.6, 1.9, 2.0, 2.0 D, 2.1** 08/79 - 02/83 51 -100 kW	**34-003701**		
AUDI 100 (44, 44Q, C3)				
B1	**1.8, 1.8 CAT, 1.9, 2.0, 2.0 CAT, 2.0 D, 2.0 D Turbo, 2.1, 2.2, 2.2 CAT, 2.2 Turbo, 2.3 E, 2.4 D, 2.5 TDI** 08/82 - 11/90 51 -121 kW	**12-117321**	**12-117086**	VA: Material: Rubber/Metal; without sport chassis HA: without ball bearing; without ride height adjustment
B1	**1.8 quattro, 1.8 quattro CAT, 2.2 quattro, 2.2 quattro CAT, 2.2 E quattro, 2.2 E Turbo quattro, 2.3 quattro, 2.3 E quattro** 08/85 - 11/90 65 -121 kW	**12-117321**	**12-117086**	VA: Material: Rubber/Metal; with sports suspension HA: -> CH.Nr.: 44-M-050 000
B2	**1.8, 1.8 CAT, 1.9, 2.0, 2.0 CAT, 2.0 D, 2.0 D Turbo, 2.1, 2.2, 2.2 CAT, 2.2 Turbo, 2.3 E, 2.5 TDI** 08/82 - 11/90 51 -121 kW	**16-031289** **11-103943** SP	**15-069139**	with standard chassis
B2	**2.4 D** 08/89 - 07/91 60 kW	**16-031296** **11-101307** SP	**15-064127**	with standard chassis VA: Øa: 50 mm
B3	**1.8, 1.9, 2.1, 2.2** 08/82 - 07/84 55 -100 kW	**36-133109**	**36-133116**	with standard chassis
B3	**1.8, 1.9, 2.0, 2.1, 2.2** 11/83 - 12/87 55 -100 kW		**36-160587**	with standard chassis; with ride height adjustment
B3	**1.8, 1.8 CAT, 2.0 CAT, 2.2 CAT, 2.2 Turbo, 2.3 E** 01/88 - 11/90 65 -121 kW	**36-130757**	**36-133123**	with standard chassis
B3	**1.8, 2.0 CAT** 01/88 - 11/90 65 -85 kW		**36-160587**	with standard chassis; with ride height adjustment
B3	**1.8 quattro, 1.8 quattro CAT, 2.2 quattro, 2.2 quattro CAT, 2.2 E Turbo quattro, 2.3 quattro, 2.3 E quattro** 01/88 - 11/90 65 -121 kW	**36-160617**	**36-160587**	with standard chassis; with ride height adjustment
B3	**1.9** 08/82 - 10/83 74 kW	**36-133109**	**36-133116**	with standard chassis
B3	**1.9, 2.0 D Turbo** 08/82 - 10/83 64 -74 kW		**36-130719**	with standard chassis; Heavy Duty Version .
B3	**2.2 E quattro** 01/86 - 07/86 88 kW	**36-160617**	**i.V.**	with standard chassis
B3	**2.2** 11/83 - 12/87 96 kW	**36-133109**	**36-160587**	with standard chassis; with ride height adjustment

AUDI				
AUDI 100 (44, 44Q, C3)				
B3	**2.2** 11/83 - 12/87 101 kW	**36-160594**	**36-130719**	with standard chassis
B3	**2.3 E** 11/83 - 12/87 100 kW	**36-133109**	**36-160587**	with standard chassis; with ride height adjustment
B3	**2.0 D** 08/82 - 10/83 51 kW	**36-130757**	**36-133116**	with standard chassis
B3	**2.0 D, 2.0 D Turbo** 11/83 - 12/87 51 -64 kW	**36-130757**	**36-133116**	with standard chassis
B3	**2.0 D, 2.0 D Turbo, 2.4 D, 2.5 TDI** 01/88 - 11/90 51 -88 kW	**36-130757**	**36-133123**	with standard chassis
B3	**2.0 D** 08/82 - 10/83 51 kW		**36-130719**	with off-road suspension
B3	**2.0 D, 2.0 D Turbo, 2.4 D, 2.5 TDI** 11/83 - 11/90 51 -88 kW		**36-160587**	with standard chassis; with ride height adjustment
B3	**2.0 D Turbo** 08/82 - 10/83 64 kW	**36-133086**	**36-133116**	with standard chassis
B4	**1.8, 1.8 CAT, 1.9, 2.0, 2.0 CAT, 2.0 D, 2.0 D Turbo, 2.1, 2.2, 2.2 CAT, 2.2 Turbo, 2.3 E, 2.5 TDI** 08/82 - 11/90 51 -121 kW	**21-030390** **11-103943** SP	**19-020150**	with standard chassis
B4	**1.8 quattro, 1.8 quattro CAT, 2.2 quattro CAT, 2.2 E Turbo quattro, 2.3 quattro, 2.3 E quattro** 08/85 - 11/90 65 -121 kW	**21-030390** **11-103943** SP		with standard chassis
B4	**2.4 D** 08/89 - 07/91 60 kW	**21-030390** **11-103943** SP	**19-029214**	with standard chassis
B6 Sport	**1.8, 1.8 CAT, 1.9, 2.0, 2.0 CAT, 2.0 D, 2.0 D Turbo, 2.1, 2.2, 2.2 CAT, 2.2 Turbo, 2.3 E, 2.4 D, 2.5 TDI** 08/82 - 11/90 51 -121 kW	**34-003701**	*24-001304*	HA: thread: M10
B6 Sport	**1.8 quattro, 1.8 quattro CAT, 2.2 quattro, 2.2 quattro CAT, 2.2 E quattro, 2.2 E Turbo quattro, 2.3 E quattro** 08/85 - 12/89 65 -121 kW	**34-003701**	**24-020657**	HA: thread: M12
B8	**1.8 quattro, 1.8 quattro CAT, 2.2 quattro, 2.2 quattro CAT, 2.2 E quattro, 2.2 E Turbo quattro, 2.3 E quattro** 08/85 - 12/89 65 -121 kW	**34-003695**	**24-020664**	HA: thread: M12
AUDI 100 Avant (44, 44Q, C3)				
B1	**1.8, 1.8 CAT, 1.9, 2.0, 2.0 D, 2.0 E, 2.0 E CAT, 2.0 TD, 2.1, 2.2, 2.2 CAT, 2.2 Turbo, 2.3, 2.4 D, 2.5 TDI** 08/82 - 11/90 51 -121 kW	**12-117321**	**12-117086**	VA: Material: Rubber/Metal; without sport chassis HA: without ball bearing; without ride height adjustment
B1	**1.8 quattro, 1.8 quattro CAT, 2.2 quattro, 2.2 quattro CAT, 2.2 E quattro, 2.2 Turbo quattro, 2.3 quattro, 2.3 E quattro** 08/85 - 11/90 65 -121 kW	**12-117321**	**12-117086**	without sport chassis VA: Material: Rubber/Metal HA: -> CH.Nr.: 44-M-50 000
B2	**1.8, 1.8 CAT, 1.9, 2.0, 2.0 D, 2.0 E, 2.0 E CAT, 2.0 TD, 2.1, 2.2, 2.2 CAT, 2.2 Turbo, 2.3, 2.5 TDI** 08/82 - 11/90 51 -121 kW	**16-031289** **11-103943** SP	**15-069139**	with standard chassis
B2	**2.4 D** 08/89 - 11/90 60 kW	**16-031289** **11-103943** SP	**15-064127**	with standard chassis

AUDI

AUDI 100 Avant (44, 44Q, C3)

B3	**1.8** 08/82 - 03/85 55 -66 kW	**36-133109**	**36-130719**	with standard chassis
B3	**1.8, 1.8 CAT** 08/82 - 11/90 55 -66 kW	**36-133154**	**36-130719**	with standard chassis; Heavy Duty Version .
B3	**1.8 quattro, 1.8 quattro CAT, 2.2 quattro, 2.2 quattro CAT, 2.2 E quattro, 2.2 Turbo quattro, 2.3 quattro, 2.3 E quattro** 08/85 - 11/90 65 -121 kW	**36-160617**		with standard chassis; with ride height adjustment
B3	**1.9, 2.2** 02/83 - 08/84 74 -101 kW	**36-130757**	**36-130719**	with standard chassis; with AC
B3	**1.9, 2.0 D, 2.0 TD, 2.2, 2.2 CAT, 2.2 Turbo, 2.3, 2.4 D, 2.5 TDI** 02/83 - 11/90 51 -121 kW	**36-133130**	**36-130719**	with standard chassis; Heavy Duty Version .
B3	**2.0, 2.0 E, 2.0 TD, 2.2, 2.2 CAT, 2.2 Turbo, 2.3, 2.4 D, 2.5 TDI** 08/86 - 11/90 60 -121 kW	**36-130757**	**36-130719**	with standard chassis; without AC
B3	**2.0, 2.0 E, 2.0 E CAT, 2.2, 2.2 CAT, 2.2 Turbo, 2.3** 08/86 - 11/90 83 -121 kW	**36-133130**	**36-130719**	with standard chassis; with AC
B3	**2.2** 11/83 - 12/87 101 kW	**36-160594**	**36-130719**	with standard chassis
B3	**2.2 quattro, 2.2 E quattro** 08/84 - 12/85 88 -101 kW	**36-133154**		with standard chassis; without ride height adjustment
B3	**2.2 quattro, 2.2 quattro CAT, 2.2 E quattro, 2.3 quattro, 2.3 E quattro** 08/84 - 11/90 88 -101 kW	**36-133154**	**i.V.**	with standard chassis; without ride height adjustment
B3	**2.2 Turbo quattro** 08/86 - 11/90 121 kW	**36-133130**	**i.V.**	with standard chassis; without ride height adjustment
B3	**2.0 D, 2.0 TD, 2.2** 08/84 - 11/90 51 -101 kW	**36-130757**	**36-130719**	with standard chassis; without AC
B4	**1.8, 1.8 CAT, 1.9, 2.0, 2.0 D, 2.0 E, 2.0 E CAT, 2.0 TD, 2.1, 2.2, 2.2 CAT, 2.2 Turbo, 2.3, 2.5 TDI** 08/82 - 11/90 51 -121 kW	**21-030390** **11-103943** SP	**19-020150**	with standard chassis
B4	**1.8 quattro, 1.8 quattro CAT, 2.2 quattro CAT, 2.2 Turbo quattro, 2.3 quattro, 2.3 E quattro** 08/85 - 11/90 65 -121 kW	**21-030390** **11-103943** SP		with standard chassis
B4	**2.4 D** 08/89 - 11/90 60 kW	**21-030390**	**19-029214**	with standard chassis
B6 Sport	**1.8, 1.8 CAT, 1.9, 2.0, 2.0 D, 2.0 E, 2.0 E CAT, 2.0 TD, 2.1, 2.2, 2.2 CAT, 2.2 Turbo, 2.3, 2.4 D** 08/82 - 11/90 51 -121 kW	**34-003701**	*24-001304*	
B6 Sport	**1.8 quattro, 1.8 quattro CAT, 2.2 quattro, 2.2 quattro CAT, 2.2 E quattro, 2.2 Turbo quattro, 2.3 quattro, 2.3 E quattro** 08/85 - 11/90 65 -121 kW	**34-003701**	**24-020657**	with standard chassis
B8	**1.8 quattro, 1.8 quattro CAT, 2.2 quattro, 2.2 quattro CAT, 2.2 E quattro, 2.2 Turbo quattro, 2.3 quattro, 2.3 E quattro** 08/85 - 11/90 65 -121 kW	**34-003695**	**24-020664**	with sports suspension

AUDI

AUDI 100 Avant (44, 44Q, C3)

AUDI 100 (4A, C4)

B1	**1.6, 2.0, 2.0 E, 2.0 E 16V, 2.3 E, 2.4 D, 2.5 TDI, 2.6, 2.8 E** 12/90 - 06/94 60 -128 kW	**12-117338**	**12-117086**	VA: with ball bearing HA: without ball bearing; without ride height adjustment
B1	**2.0 E 16V quattro, 2.0 E quattro, 2.3 E quattro, 2.6 quattro, 2.6 E quattro, 2.8 E quattro, S4 Turbo quattro, S4 V8 quattro** 08/91 - 07/94 85 -213 kW	**12-117338**	**12-117086**	VA: with ball bearing HA: without ball bearing; For vehicles without stabilizer
B3	**1.6, 2.0, 2.0 E, 2.0 E 16V, 2.3 E** 12/90 - 06/94 74 -103 kW	**36-131204**	**36-131006**	with standard chassis
B3	**1.6, 2.0, 2.0 E, 2.0 E 16V, 2.3 E, 2.4 D, 2.5 TDI, 2.6, 2.8 E** 12/90 - 06/94 60 -128 kW	**36-131181**	**36-131013**	with standard chassis; Heavy Duty Version .
B3	**2.6, 2.8 E** 12/90 - 06/94 102 -128 kW	**36-130764**	**36-131006**	with standard chassis
B3	**2.4 D, 2.5 TDI** 12/90 - 06/94 60 -85 kW	**36-133147**	**36-131006**	with standard chassis
B4	**1.6, 2.0, 2.0 E, 2.0 E 16V, 2.3 E, 2.4 D, 2.5 TDI, 2.6, 2.8 E** 12/90 - 06/94 60 -128 kW	**21-030390** **11-103943** SP	**19-029214**	with standard chassis
B4	**1.6, 2.0, 2.0 E, 2.0 E 16V, 2.3 E, 2.4 D, 2.5 TDI, 2.6, 2.8 E** 12/90 - 06/94 60 -128 kW	**21-030390** **11-103943** SP		with sports suspension
B4	**2.0 E quattro, 2.3 E quattro, 2.6 quattro, 2.6 E quattro, 2.8 E quattro** 12/90 - 06/94 85 -128 kW	**21-030390** **11-103943** SP		with standard chassis
B6 Sport	**1.6, 2.0, 2.0 E, 2.0 E 16V, 2.3 E, 2.4 D, 2.5 TDI, 2.6, 2.8 E** 12/90 - 06/94 60 -128 kW	**34-003701**	**24-015769**	HA: thread: M10
B6 Sport	**2.0 E 16V quattro, 2.0 E quattro, 2.3 E quattro, 2.6 quattro, 2.6 E quattro, 2.8 E quattro, S4 Turbo quattro** 08/91 - 07/94 85 -169 kW	**34-003701**	**24-025935**	HA: thread: M10
B6 Sport	**2.0 E 16V quattro, 2.0 E quattro, 2.3 E quattro, 2.6 quattro, 2.6 E quattro, 2.8 E quattro, S4 Turbo quattro** 08/91 - 07/94 85 -169 kW	**34-003701**	**24-020657**	with standard chassis; with sports suspension HA: thread: M12
B8	**1.6, 2.0, 2.0 E, 2.0 E 16V, 2.3 E, 2.4 D, 2.5 TDI, 2.6, 2.8 E** 12/90 - 06/94 60 -128 kW	**34-003695**	**24-015738**	HA: thread: M10
B8	**2.0 E 16V quattro, 2.0 E quattro, 2.3 E quattro, 2.6 quattro, 2.6 E quattro, 2.8 E quattro, S4 Turbo quattro, S4 V8 quattro** 08/91 - 07/94 85 -213 kW	**34-003695**	**24-020664**	with standard chassis; with sports suspension HA: thread: M12
B12 PK	**2.3 E quattro, 2.6 quattro, 2.6 E quattro, 2.8 E quattro, S4 Turbo quattro** 12/90 - 07/94 98 -169 kW	**46-192363**		without ride height adjustment; Conditions see certificates; thread: M12 VA: lowering (expertise): 35 mm; axle load to: 1240 kg HA: lowering (expertise): 30 mm; axle load to: 1200 kg
B12 PK	**2.3 E quattro, 2.6 quattro, 2.6 E quattro, 2.8 E quattro, S4 Turbo quattro** 12/90 - 07/94 98 -169 kW	**46-192400**		without ride height adjustment; Conditions see certificates; automatic transmission VA: lowering (expertise): 35 mm; axle load to: 1240 kg HA: lowering (expertise): 30 mm; axle load to: 1200 kg

AUDI				
AUDI 100 Avant (4A, C4)				
B1	**2.0 E quattro, 2.3 E quattro, 2.6 quattro, 2.6 E quattro, 2.8 E quattro** 12/90 - 06/94 85 -128 kW	**12-117338**	**12-117086**	VA: with ball bearing HA: without ball bearing; For vehicles without stabilizer
B3	**1.6, 2.0 E, 2.0 E 16V, 2.3 E** 09/91 - 06/94 74 -103 kW	**36-131204**	**36-131020**	with standard chassis
B3	**1.6, 2.0 E, 2.0 E 16V, 2.3 E, 2.4 D, 2.5 TDI, 2.6, 2.8 E** 09/91 - 06/94 60 -128 kW	**36-131181**	**36-131129**	with standard chassis; Heavy Duty Version .
B3	**2.6, 2.8 E** 09/91 - 06/94 102 -128 kW	**36-130764**	**36-131020**	with standard chassis
B3	**2.4 D, 2.5 TDI** 12/90 - 06/94 60 -85 kW	**36-133147**	**36-131020**	with standard chassis
B4	**1.6, 2.0 E, 2.0 E 16V, 2.3 E, 2.4 D, 2.5 TDI, 2.6, 2.8 E** 09/91 - 06/94 60 -128 kW	**21-030390** **11-103943** *SP*	**19-029214**	with standard chassis HA: thread: M10
B4	**1.6, 2.0 E, 2.0 E 16V, 2.3 E, 2.4 D, 2.5 TDI, 2.6, 2.8 E** 09/91 - 06/94 60 -128 kW	**21-030390** **11-103943** *SP*		with sports suspension
B4	**2.0 E 16V quattro, 2.0 E quattro, 2.3 E quattro, 2.6 quattro, 2.6 E quattro, 2.8 E quattro** 09/91 - 07/94 85 -128 kW	**21-030390** **11-103943** *SP*		with standard chassis
B6 Sport	**1.6, 2.0 E, 2.0 E 16V, 2.3 E, 2.4 D, 2.5 TDI, 2.6, 2.8 E** 12/90 - 06/94 60 -128 kW	**34-003701**	**24-015769**	HA: thread: M10
B6 Sport	**2.0 E 16V quattro, 2.0 E quattro, 2.3 E quattro, 2.6 quattro, 2.6 E quattro, 2.8 E quattro** 09/91 - 07/94 85 -128 kW	**34-003701**	**24-025935**	thread: M10
B6 Sport	**2.0 E 16V quattro, 2.0 E quattro, 2.3 E quattro, 2.6 quattro, 2.6 E quattro, 2.8 E quattro** 09/91 - 07/94 85 -128 kW	**34-003701**	**24-020657**	with sports suspension; with standard chassis; thread: M12
B8	**1.6, 2.0 E, 2.0 E 16V, 2.3 E, 2.4 D, 2.5 TDI, 2.6, 2.8 E** 09/91 - 06/94 60 -128 kW	**34-003695**	**24-015738**	HA: thread: M10
B8	**2.0 E quattro, 2.3 E quattro, 2.6 quattro, 2.6 E quattro, 2.8 E quattro** 12/90 - 06/94 85 -128 kW	**34-003695**	**24-020664**	with sports suspension; with standard chassis; thread: M12
B8	**2.0 E 16V quattro** 07/92 - 06/94 103 kW	**34-003695**	**24-020664**	with sports suspension; with standard chassis; thread: M12
B8	**S4 Turbo quattro** 09/91 - 06/94 169 kW	**34-003695**	**24-020664**	with sports suspension; with standard chassis; thread: M12
B8	**S4 V8 quattro** 10/92 - 06/94 206 kW	**34-003695**	**24-020664**	with sports suspension; with standard chassis; thread: M12
B8	**S4 V8 quattro** 03/94 - 06/94 213 kW	**34-003695**	**24-020664**	with sports suspension; with standard chassis; thread: M12
AUDI 200 (43)				
B1	**2.1 5 E, 2.1 5 T** 01/80 - 09/82 100 -125 kW	**12-117321**		VA: Material: Rubber/Metal
B3	**2.1 5 E** 10/79 - 09/82 100 kW	**36-130757**	**36-133116**	with standard chassis

AUDI				
AUDI 200 (43)				
B3	**2.1 5 E** 10/79 - 09/82 100 kW		**36-130726**	with standard chassis; Heavy Duty Version .
B3	**2.1 5 T** 10/79 - 08/82 125 kW	**36-133086**		with standard chassis
B3	**2.1 5 T** 10/79 - 08/82 125 kW	**36-130757**		with standard chassis; Heavy Duty Version .
B4	**2.1 5 E, 2.1 5 T** 10/79 - 09/82 100 -125 kW	**21-030390** **11-103943** SP	**19-020150**	with standard chassis
B6 Sport	**2.1 5 E, 2.1 5 T** 10/79 - 09/82 100 -125 kW	**34-003701**	**24-015769**	
B8	**2.1 5 E, 2.1 5 T** 10/79 - 09/82 100 -125 kW	**34-003695**	**24-015738**	
AUDI 200 (44, 44Q)				
B1	**2.1 5 E, 2.1 Turbo, 2.1 Turbo quattro, 2.2, 2.2 20V Turbo quattro, 2.2 Turbo, 2.2 Turbo quattro, 2.3** 08/83 - 09/91 100 -162 kW	**12-117321**	**12-117086**	not for: Exklusiv VA: Material: Rubber/Metal HA: without ball bearing
B2	**2.2, 2.2 Turbo, 2.3** 08/84 - 09/91 100 -147 kW	**16-031289** **11-103943** SP	**15-069139**	with standard chassis HA: thread: M10
B3	**2.1 5 E, 2.1 Turbo, 2.2, 2.2 Turbo, 2.3** 08/83 - 09/91 100 -147 kW		**36-160587**	with standard chassis; with ride height adjustment
B3	**2.2 Turbo** 08/85 - 09/91 121 -147 kW	**36-133154**	**36-133123**	with standard chassis
B3	**2.2 20V Turbo quattro, 2.2 Turbo quattro** 01/88 - 12/91 121 -162 kW	**36-133130**	**36-133123**	with standard chassis
B3	**2.3** 11/86 - 09/91 100 kW	**36-133154**	**36-133123**	with standard chassis
B4	**2.2, 2.2 Turbo, 2.3** 08/84 - 09/91 100 -147 kW	**21-030390** **11-103943** SP	**19-020150**	with standard chassis HA: thread: M10
B4	**2.2 20V Turbo quattro, 2.2 Turbo quattro** 02/88 - 12/91 121 -162 kW	**21-030390** **11-103943** SP		with standard chassis
B6 Sport	**2.1 5 E, 2.1 Turbo, 2.2, 2.2 Turbo, 2.3** 08/83 - 09/91 100 -147 kW	**34-003701**	**24-015769**	HA: thread: M10
B6 Sport	**2.1 Turbo quattro, 2.2 20V Turbo quattro, 2.2 Turbo quattro** 01/84 - 12/90 121 -162 kW	**34-003701**	**24-025935**	thread: M10
B6 Sport	**2.1 Turbo quattro, 2.2 20V Turbo quattro, 2.2 Turbo quattro** 01/84 - 12/90 121 -162 kW	**34-003701**	**24-020657**	thread: M12
B8	**2.1 5 E, 2.1 Turbo, 2.2, 2.2 Turbo, 2.3** 08/83 - 09/91 100 -147 kW	**34-003695**	**24-015738**	HA: thread: 10
B8	**2.1 Turbo quattro, 2.2 20V Turbo quattro, 2.2 Turbo quattro** 08/83 - 11/90 121 -162 kW	**34-003695**	**24-020664**	thread: M12
AUDI 200 Avant (44, 44Q)				
B1	**2.1 Turbo quattro, 2.2 20V Turbo quattro, 2.2 Turbo, 2.2 Turbo quattro, 2.3** 09/83 - 09/91 100 -162 kW	**12-117321**		not for: Exklusiv VA: Material: Rubber/Metal

AUDI				
AUDI 200 Avant (44, 44Q)				
B2	**2.2 Turbo, 2.3** 08/85 - 09/91 100 -121 kW	**16-031289** **11-103943** SP	**15-069139**	with standard chassis HA: thread: M10
B3	**2.2 Turbo, 2.3** 08/85 - 09/91 100 -121 kW	**36-133154**	**36-130719**	with standard chassis
B4	**2.1 Turbo quattro, 2.2 20V Turbo quattro, 2.2 Turbo quattro** 09/83 - 12/91 121 -162 kW	**21-030390** **11-103943** SP		with standard chassis
B4	**2.2 Turbo, 2.3** 08/85 - 09/91 100 -121 kW	**21-030390** **11-103943** SP	**19-020150**	with standard chassis HA: thread: M10
B6 Sport	**2.1 Turbo quattro, 2.2 20V Turbo quattro, 2.2 Turbo quattro** 01/84 - 12/90 121 -162 kW	**34-003701**	**24-025935**	thread: M10
B6 Sport	**2.1 Turbo quattro, 2.2 20V Turbo quattro, 2.2 Turbo quattro** 01/84 - 12/90 121 -162 kW	**34-003701**	**24-020657**	thread: M12
B8	**2.1 Turbo quattro, 2.2 20V Turbo quattro, 2.2 Turbo quattro** 01/84 - 12/90 121 -162 kW	**34-003695**	**24-020664**	thread: M12
AUDI-FAW				
AUDI-FAW A4 Saloon (B7)				
B4	**1.8 TURBO, 2.0, 2.0 TURBO, 3.0 quattro** 07/05 - 09/08 120 -160 kW	**19-158945**	**19-158952**	with standard chassis
B4	**1.8 TURBO, 2.0, 2.0 TURBO, 3.0 quattro** 07/05 - 09/08 120 -160 kW	**19-164472**	**19-164489**	with sports suspension
B6 Sport	**1.8 TURBO, 2.0, 2.0 TURBO, 3.0 quattro** 07/05 - 09/08 120 -160 kW	**24-119788**	**24-119795**	
B8	**1.8 TURBO, 2.0, 2.0 TURBO, 3.0 quattro** 07/05 - 09/08 120 -160 kW	**24-119818**	**24-119825**	
B12 PK	**1.8 TURBO, 2.0, 2.0 TURBO** 07/05 - 09/08 120 -147 kW	**46-188465**		Conditions see certificates VA: lowering (expertise): 30 mm; axle load to: 1090 kg HA: lowering (expertise): 30 mm; axle load to: 1035 kg
B12 PK	**2.0, 2.0 TURBO** 07/05 - 09/08 132 -147 kW	**46-188472**		Conditions see certificates VA: lowering (expertise): 30 mm; axle load to: 1165 kg HA: lowering (expertise): 30 mm; axle load to: 1035 kg
B12 PK	**3.0 quattro** 07/05 - 09/08 160 kW	**46-188489**		Conditions see certificates VA: lowering (expertise): 30 mm; axle load to: 1230 kg HA: lowering (expertise): 30 mm; axle load to: 1130 kg
B12 SL	**1.8 TURBO, 2.0, 2.0 TURBO** 07/05 - 09/08 120 -147 kW	**46-188588**		Conditions see certificates VA: lowering (expertise): 45-50 mm; axle load to: 1090 kg HA: lowering (expertise): 35-40 mm; axle load to: 1035 kg
B12 SL	**2.0, 2.0 TURBO** 07/05 - 09/08 132 -147 kW	**46-188595**		Conditions see certificates VA: lowering (expertise): 45-50 mm; axle load to: 1140 kg HA: lowering (expertise): 35-40 mm; axle load to: 1035 kg
B14	**1.8 TURBO, 2.0, 2.0 TURBO, 3.0 quattro** 07/05 - 09/08 120 -160 kW	**47-169289**		Conditions see certificates VA: lowering (expertise): 30-60 mm; axle load to: 1250 kg HA: lowering (expertise): 20-50 mm; axle load to: 1170 kg
B16 PSS9	**1.8 TURBO, 2.0, 2.0 TURBO, 3.0 quattro** 07/05 - 09/08 120 -160 kW	**48-169301**		Conditions see certificates VA: lowering (expertise): 30-60 mm; axle load to: 1250 kg HA: lowering (expertise): 20-50 mm; axle load to: 1170 kg
AUDI-FAW A4L Saloon (B8)				
B4	**2.0, 3.2, L 1.8** 11/08 - 118 -195 kW	**19-171593**	**19-171609**	with standard chassis; without electronic suspension control

AUDI-FAW				
AUDI-FAW A4L Saloon (B8)				
B4	**2.0, 3.2, L 1.8** 11/08 - 118 -195 kW	**19-171616**	**19-171623**	with sports suspension; without electronic suspension control
B6 Sport	**2.0, 3.2, L 1.8** 11/08 - 118 -195 kW	**24-145961**	**24-145978**	without electronic suspension control
B8	**2.0, 3.2, L 1.8** 11/08 - 118 -195 kW	**24-145985**	**24-145992**	with sports suspension; without electronic suspension control
B12 PK	**2.0, 3.2, L 1.8** 11/08 - 118 -195 kW	**46-183323**		with standard chassis; without lowered chassis; without electronic suspension control; Conditions see certificates VA: lowering (expertise): 35 mm; axle load to: 1105 kg HA: without ride height adjustment; lowering (expertise): 30 mm; axle load to: 1160 kg
B12 SL	**2.0, 3.2, L 1.8** 11/08 - 118 -195 kW	**46-183521**		with standard chassis; without lowered chassis; without electronic suspension control; Conditions see certificates VA: lowering (expertise): 45 mm; axle load to: 1105 kg HA: without ride height adjustment; lowering (expertise): 35 mm; axle load to: 1155 kg
B16 PSS10	**2.0, 3.2, L 1.8** 11/08 - 118 -195 kW	**48-147231**		without electronic suspension control; Conditions see certificates VA: lowering (expertise): 30-50 mm; axle load to: 1245 kg HA: lowering (expertise): 30-50 mm; axle load to: 1215 kg
B16 RC	**2.0, 3.2, L 1.8** 11/08 - 118 -195 kW	**49-151282**		without electronic suspension control; Conditions see certificates VA: lowering (expertise): 30-50 mm; axle load to: 1245 kg HA: lowering (expertise): 30-50 mm; axle load to: 1215 kg
AUDI-FAW A6 Saloon (C5)				
B4	**1.8 TURBO, 2.4, 2.8** 09/99 - 12/00 110 -140 kW	**22-031167**	**19-029443** **11-149835** SP	-> CH.Nr.: 4B-Y-200 000; with standard chassis
B4	**1.8 TURBO, 2.4, 2.8** 09/99 - 12/00 110 -140 kW	**19-045771**	**19-140049** **11-149835** SP	-> CH.Nr.: 4B-Y-200 000; with sports suspension
B4	**1.8 TURBO, 2.4, 2.5 D, 2.8** 01/01 - 12/05 110 -140 kW	**19-119939**	**19-029443** **11-149835** SP	CH.Nr.: 4B-1-000 001 ->; with standard chassis
B4	**1.8 TURBO, 2.4, 2.5 D, 2.8** 01/01 - 12/05 110 -140 kW	**19-119939**	**19-140049** **11-149835** SP	CH.Nr.: 4B-1-000 001 ->; with sports suspension
B6 Sport	**1.8 TURBO, 2.4, 2.8** 09/99 - 12/00 110 -140 kW	**24-020794**	**24-025324**	-> CH.Nr.: 4B-Y-200000; without ride height adjustment VA: serie production spring seat must be used
B6 Sport	**1.8 TURBO, 2.4, 2.5 D, 2.8** 01/01 - 12/05 110 -140 kW	**24-065085**	**24-065429**	CH.Nr.: 4B- 1- 000 001 ->; without ride height adjustment VA: serie production spring seat must be used
B8	**1.8 TURBO, 2.4, 2.8** 09/99 - 12/00 110 -140 kW	**24-020817**	**24-025331** **11-101390** SP	-> CH.Nr.: 4B-Y-200000; without ride height adjustment VA: serie production spring seat must be used
B8	**1.8 TURBO, 2.4, 2.5 D, 2.8** 01/01 - 12/05 110 -140 kW	**24-065108**	**24-065436**	CH.Nr.: 4B- 1- 000 001 ->; without ride height adjustment VA: serie production spring seat must be used
B12 PK	**1.8 TURBO** 01/00 - 12/00 110 kW	**46-192196**		-> CH.Nr.: 4B-Y-200000; serie production spring seat must be used; without ride height adjustment; Conditions see certificates VA: lowering (expertise): 30 mm; axle load to: 1150 kg HA: lowering (expertise): 30 mm; axle load to: 1090 kg
B12 PK	**1.8 TURBO** 01/01 - 12/05 110 kW	**46-192202**		CH.Nr.: 4B-1-000001 ->; serie production spring seat must be used; without ride height adjustment; Conditions see certificates VA: lowering (expertise): 30 mm; axle load to: 1150 kg HA: lowering (expertise): 30 mm; axle load to: 1090 kg
B12 PK	**2.4, 2.8** 09/99 - 12/00 121 -140 kW	**46-192219**		-> CH.Nr.: 4B-Y-200000; serie production spring seat must be used; without ride height adjustment; Conditions see certificates VA: lowering (expertise): 30 mm; axle load to: 1230 kg HA: lowering (expertise): 30 mm; axle load to: 1090 kg

AUDI-FAW

AUDI-FAW A6 Saloon (C5)

B12 PK	**2.4, 2.5 D** 01/01 - 12/05 121 -132 kW	**46-192226**		CH.Nr.: 4B-1-000001 ->; serie production spring seat must be used; without ride height adjustment; Conditions see certificates VA: lowering (expertise): 30 mm; axle load to: 1230 kg HA: lowering (expertise): 30 mm; axle load to: 1090 kg
B14	**1.8 TURBO, 2.4, 2.5 D, 2.8** 09/99 - 12/05 110 -140 kW	**47-124806**		without ride height adjustment; Conditions see certificates VA: lowering (expertise): 35-55 mm; axle load to: 1205 kg HA: lowering (expertise): 35-55 mm; axle load to: 1130 kg
B16 PSS9	**1.8 TURBO, 2.4, 2.5 D, 2.8** 09/99 - 12/05 110 -140 kW	**48-088749**		without ride height adjustment; Conditions see certificates VA: lowering (expertise): 35-55 mm; axle load to: 1205 kg HA: lowering (expertise): 35-55 mm; axle load to: 1130 kg

AUDI-FAW A6L Saloon (C6)

B4	**1.8, 2.0, 2.0 TURBO, 2.4, 2.8 quattro, 3.0, 3.1 TURBO, 3.2 TURBO quattro, 4.2 TURBO quattro, L 2.7, L 2.8, L 2.8 quattro, L 3.0 quattro** 09/05 - 110 -253 kW	**19-139951**	**19-139968**	without ride height adjustment; without pneumatic suspension
B6 Sport	**1.8, 2.0, 2.0 TURBO, 2.4, 2.8 quattro, 3.0, 3.1 TURBO, 3.2 TURBO quattro, 4.2 TURBO quattro, L 2.7, L 2.8, L 2.8 quattro, L 3.0 quattro** 09/05 - 110 -253 kW	**35-116288**	**24-116299**	with standard chassis; without ride height adjustment; without pneumatic suspension
B8	**1.8, 2.0, 2.0 TURBO, 2.4, 2.8 quattro, 3.0, 3.1 TURBO, 3.2 TURBO quattro, 4.2 TURBO quattro, L 2.7, L 2.8, L 2.8 quattro, L 3.0 quattro** 09/05 - 110 -253 kW	**35-116301**	**24-116312**	with sports suspension; without ride height adjustment; without pneumatic suspension
B12 PK	**2.8 quattro, 3.2 TURBO quattro, 4.2 TURBO quattro, L 2.8 quattro, L 3.0 quattro** 04/08 - 154 -253 kW	**46-189851**		without ride height adjustment; Conditions see certificates; without pneumatic suspension VA: lowering (expertise): 30 mm; axle load to: 1215 kg HA: lowering (expertise): 30 mm; axle load to: 1240 kg
B12 PK	**1.8, 2.0, 2.0 TURBO, 2.4, 3.0, 3.1 TURBO, L 2.7, L 2.8** 03/05 - 08/08 110 -188 kW	**46-189844**		without ride height adjustment; Conditions see certificates; without pneumatic suspension VA: lowering (expertise): 30 mm; axle load to: 1215 kg HA: lowering (expertise): 30 mm; axle load to: 1115 kg
B14	**1.8, 2.0, 2.0 TURBO, 2.4, 2.8 quattro, 3.0, 3.1 TURBO, 3.2 TURBO quattro, 4.2 TURBO quattro, L 2.7, L 2.8, L 2.8 quattro, L 3.0 quattro** 09/05 - 110 -253 kW	**47-116573**		without ride height adjustment; Conditions see certificates; without pneumatic suspension VA: lowering (expertise): 40-60 mm; axle load to: 1410 kg HA: lowering (expertise): 40-60 mm; axle load to: 1380 kg
B16 PSS9	**1.8, 2.0, 2.0 TURBO, 2.4, 2.8 quattro, 3.0, 3.1 TURBO, 3.2 TURBO quattro, 4.2 TURBO quattro, L 2.7, L 2.8, L 2.8 quattro, L 3.0 quattro** 09/05 - 110 -253 kW	**48-116541**		without ride height adjustment; Conditions see certificates; without pneumatic suspension VA: lowering (expertise): 40-60 mm; axle load to: 1410 kg HA: lowering (expertise): 40-60 mm; axle load to: 1380 kg

AUDI-FAW Q5 Closed Off-Road Vehicle

B4	**2.0** 03/10 - 155 kW	**19-171593**	**19-171609**	with standard chassis; without electronic suspension control
B6 Sport	**2.0** 03/10 - 155 kW	**24-145961**	**24-145978**	
B8	**2.0** 03/10 - 155 kW	**24-145985**	**24-145992**	
B12 PK	**2.0** 03/10 - 155 kW	**46-188083**		without electronic suspension control; without ride height adjustment; Conditions see certificates VA: lowering (expertise): 30 mm; axle load to: 1235 kg HA: lowering (expertise): 25 mm; axle load to: 1345 kg

AUSTIN				
AUSTIN MINI MK I				
B6 Sport	**1.3, 1000, 1000 Mayfair, 1000 Mayfair Sport, 1100 Special, 1275 GT, 850** 01/67 - 08/81 25 -53 kW	**24-181464** OIO	**24-181471** OIO	
AUSTIN MINI				
B6 Sport	**0.9, 1.3** 09/69 - 10/85 25 -48 kW	**24-181464** OIO	**24-181471** OIO	
AUSTIN-HEALEY				
AUSTIN-HEALEY AUSTIN-HEALEY				
B6 Sport	**3000 Sport MK.III** 01/59 - 12/64 110 kW	*24-025768* OIO	*24-025775* OIO	
AUTOBIANCHI				
AUTOBIANCHI A 112				
B6 Sport	**0.9, 0.9 E, 0.9 Junior, 1.0 E,Elite,LX** 10/69 - 12/85 31 -35 kW		*34-000427*	HA: Quick Repair Service .; Used part return required .
AUTO UNION				
AUTO UNION MUNGA				
B6 Offroad	**F 91/4, F 91/6, F 91/8** 03/57 - 06/69 32 kW		**24-000321** OIO	HA: charakteristic: 280/100
BENTLEY				
BENTLEY CONTINENTAL				
B6 Sport	**6.75 V8 R, 6.75 V8 S, 6.75 V8 T Mulliner** 01/85 - 265 -313 kW	**24-014298**	**24-014304**	HA: without ride height adjustment
BMW				
BMW 1 (E81, E87)				
B1	**116 i, 116i, 118 d, 118d, 118i, 120 i, 120d, 120i, 123d, 130i, 2.0** 09/04 - 85 -195 kW	**12-224432**		VA: -> 04/08
B1	**116 i, 116d, 116i, 118 d, 118d, 118i, 120 i, 120d, 120i, 123d, 130i, 2.0** 09/04 - 85 -195 kW	**12-117260**	**12-226443** ⇧ **12-226436** ⇩	VA: 05/08-> 07/11
B3	**116 i, 116i, 118i** 09/04 - 85 -105 kW	**37-161309**	**36-161393**	with standard chassis
B3	**116 i, 116i, 118i, 120 i, 120i** 09/04 - 85 -125 kW	**37-161293**	**36-161379**	with standard chassis; Heavy Duty Version .
B3	**116i** 01/09 - 90 kW	**37-161309**		with standard chassis
B3	**120 i, 120i** 09/04 - 110 -125 kW	**37-161309**	**36-161393**	with standard chassis; Number of Doors: 3
B3	**120 i, 120i** 09/04 - 110 -125 kW	**37-161293**	**36-161393**	with standard chassis; Number of Doors: 5

BMW

BMW 1 (E81, E87)

B3	**130i** 03/05 - 190 -195 kW	**37-161286**	**36-161379**	with standard chassis
B3	**130i** 03/05 - 190 -195 kW	**37-161279**	**36-161355**	with standard chassis; Heavy Duty Version .
B3	**116d, 118 d, 118d, 120d** 03/07 - 85 -130 kW	**37-161293**	**36-161379**	with standard chassis; Number of Doors: 3
B3	**116d, 118 d, 118d** 04/07 - 85 -105 kW	**37-161293**	**36-161393**	with standard chassis; Number of Doors: 5
B3	**116d, 118 d, 118d, 120d** 03/07 - 85 -130 kW	**37-161286**	**36-161355**	with standard chassis; Heavy Duty Version .; Number of Doors: 3
B3	**116d, 118 d, 118d, 120 i** 09/04 - 85 -110 kW	**37-161286**	**36-161379**	with standard chassis; Heavy Duty Version .; Number of Doors: 5
B3	**120d** 09/04 - 120 -130 kW	**37-161286**	**36-161379**	with standard chassis; Number of Doors: 5
B3	**120d** 09/04 - 120 -130 kW	**37-161279**	**36-161355**	with standard chassis; Heavy Duty Version .; Number of Doors: 5
B3	**123d, 2.0** 03/07 - 115 -150 kW	**37-161279**	**36-161355**	with standard chassis; Number of Doors: 3
B3	**123d, 2.0** 03/07 - 115 -150 kW	**37-161279**	**36-161379**	with standard chassis; Number of Doors: 5
B3	**123d, 2.0** 03/07 - 115 -150 kW	**37-161262**	**36-161331**	with standard chassis; Heavy Duty Version .; Number of Doors: 3
B3	**123d, 2.0** 03/07 - 115 -150 kW	**37-161262**	**36-161355**	with standard chassis; Heavy Duty Version .; Number of Doors: 5
B4	**116 i, 116d, 116i, 118 d, 118d, 118i, 120 i, 120d, 120i, 123d, 130i, 2.0** 09/04 - 85 -195 kW	**22-144249** **22-144263**	**19-144221**	with standard chassis
B4	**116 i, 116d, 116i, 118 d, 118d, 118i, 120 i, 120d, 120i, 123d, 130i, 2.0** 09/04 - 85 -195 kW	**22-144256** **22-144270**	**19-144238**	with sports suspension
B6 Sport	**116 i, 116d, 116i, 118 d, 118d, 118i, 120 i, 120d, 120i, 123d, 130i, 2.0** 09/04 - 85 -195 kW	**35-115908** **35-115915**	**24-115926**	without M-technics
B6 a10	**116 i, 116d, 116i, 118 d, 118d, 118i, 120 i, 120d, 120i, 123d, 130i, 2.0** 09/04 - 85 -195 kW	**31-181914** **31-181921**	**26-181936**	
B8	**116 i, 116d, 116i, 118 d, 118d, 118i, 120 i, 120d, 120i, 123d, 130i, 2.0** 09/04 - 85 -195 kW	**35-115939** **35-115946**	**24-115957**	with M-technics
B12 PK	**116 i, 116i, 118i, 120 i, 120i, 2.0** 09/04 - 85 -125 kW	**46-180483**		Conditions see certificates VA: lowering (expertise): 30 mm; axle load to: 875 kg HA: without ride height adjustment; lowering (expertise): 25 mm; axle load to: 1060 kg
B12 PK	**116d, 118 d, 118d, 120d, 123d, 130i** 09/05 - 85 -195 kW	**46-180490**		Conditions see certificates VA: lowering (expertise): 30 mm; axle load to: 920 kg HA: without ride height adjustment; lowering (expertise): 25 mm; axle load to: 1060 kg
B12 SL	**116 i, 116i, 118i, 120 i, 120i, 2.0** 09/04 - 85 -125 kW	**46-180506**		Conditions see certificates VA: lowering (expertise): 45-50 mm; axle load to: 895 kg HA: without ride height adjustment; lowering (expertise): 35 mm; axle load to: 1060 kg
B12 SL	**116d, 118 d, 118d, 120d, 123d, 130i** 09/05 - 85 -195 kW	**46-180513**		Conditions see certificates VA: lowering (expertise): 45-50 mm; axle load to: 920 kg HA: without ride height adjustment; lowering (expertise): 35 mm; axle load to: 1060 kg

BMW

BMW 1 (E81, E87)

B14	**116 i, 116d, 116i, 118 d, 118d, 118i, 120 i, 120d, 120i, 123d, 130i, 2.0** 09/04 - 85 -195 kW	**47-120471**		Conditions see certificates VA: lowering (expertise): 30-50 mm; axle load to: 910 kg HA: lowering (expertise): 30-50 mm; axle load to: 1035 kg
B16 PSS10	**116 i, 116d, 116i, 118 d, 118d, 118i, 120 i, 120d, 120i, 123d, 130i, 2.0** 09/04 - 85 -195 kW	**48-131636**		Conditions see certificates VA: lowering (expertise): 30-50 mm; axle load to: 1020 kg HA: lowering (expertise): 30-50 mm; axle load to: 1200 kg
B16 PSS10	**116 i, 116d, 116i, 118 d, 118d, 118i, 120 i, 120d, 120i, 123d, 130i, 2.0** 09/04 - 85 -195 kW	**48-195232**		Conditions see certificates VA: lowering (expertise): 20-40 mm; axle load to: 1020 kg HA: lowering (expertise): 20-40 mm; axle load to: 1200 kg
B16 RC	**116 i, 116d, 116i, 118 d, 118d, 118i, 120 i, 120d, 120i, 123d, 130i, 2.0** 09/04 - 85 -195 kW	**49-131543**		Conditions see certificates VA: lowering (expertise): 30-50 mm; axle load to: 1020 kg HA: lowering (expertise): 30-50 mm; axle load to: 1200 kg

BMW 1 Coupe (E82)

B1	**118d, 120d, 120i, 123d, 125i, 135i** 10/07 - 100 -225 kW	**12-117260**	**12-226443** **12-226436**	VA: with ball bearing
B1	**120d, 123d, 125i, 135i** 10/07 - 130 -225 kW	**12-224432**		VA: -> 04/08
B3	**118d, 120d, 123d** 10/07 - 100 -150 kW	**37-161293**	**36-161317**	with standard chassis
B3	**118d, 120d, 123d** 10/07 - 100 -150 kW	**37-161286**	**36-161393**	with standard chassis; Heavy Duty Version .
B4	**118d, 120d, 120i, 123d, 125i, 135i** 10/07 - 100 -225 kW	**22-152749** **22-152756**	**19-152769**	with standard chassis
B4	**118d, 120d, 120i, 123d, 125i, 135i** 10/07 - 100 -225 kW	**22-152770** **22-152787**	**19-152790**	with sports suspension
B6 Sport	**118d, 120d, 120i, 123d, 125i, 135i** 10/07 - 100 -225 kW	**35-115908** **35-115915**	**24-115926**	without M-technics
B6 a10	**118d, 120d, 120i, 123d, 125i, 135i** 10/07 - 100 -225 kW	**31-181914** **31-181921**	**26-181936**	
B8	**118d, 120d, 120i, 123d, 125i, 135i** 10/07 - 100 -225 kW	**35-115939** **35-115946**	**24-115957**	with M-technics
B12 PK	**118d, 120d, 123d, 125i, 135i** 10/07 - 100 -225 kW	**46-180537**		Conditions see certificates VA: lowering (expertise): 30-35 mm; axle load to: 945 kg HA: without ride height adjustment; lowering (expertise): 30-35 mm; axle load to: 1030 kg
B14	**118d, 120d, 120i, 123d, 125i, 135i** 10/07 - 100 -225 kW	**47-120471**		Conditions see certificates VA: lowering (expertise): 30-50 mm; axle load to: 910 kg HA: lowering (expertise): 30-50 mm; axle load to: 1035 kg
B16 PSS10	**3.0 M** 04/11 - 250 kW	**48-145701**		without electronic suspension control; without EDC; Conditions see certificates VA: lowering (expertise): 10-35 mm; axle load to: 1060 kg HA: lowering (expertise): 20-35 mm; axle load to: 1270 kg
B16 PSS10	**118d, 120d, 120i, 123d, 125i, 135i** 10/07 - 100 -225 kW	**48-131636**		Conditions see certificates VA: lowering (expertise): 30-50 mm; axle load to: 1020 kg HA: lowering (expertise): 30-50 mm; axle load to: 1200 kg
B16 PSS10	**118d, 120d, 120i, 123d, 125i, 135i** 10/07 - 100 -225 kW	**48-195232**		Conditions see certificates VA: lowering (expertise): 20-40 mm; axle load to: 1020 kg HA: lowering (expertise): 20-40 mm; axle load to: 1200 kg
B16 RC	**118d, 120d, 120i, 123d, 125i, 135i** 10/07 - 100 -225 kW	**49-131543**		Conditions see certificates VA: lowering (expertise): 30-50 mm; axle load to: 1020 kg HA: lowering (expertise): 30-50 mm; axle load to: 1200 kg
B16 BCS	**3.0 M** 04/11 - 250 kW	**48-223539**		Conditions see certificates VA: lowering (expertise): 10-35 mm; axle load to: 1060 kg HA: lowering (expertise): 20-35 mm; axle load to: 1270 kg

BMW

BMW 1 Convertible (E88)

B1	**118d, 118i, 120d, 120i, 123d, 125i, 135i** 03/08 - 100 -225 kW	**12-117260**	**12-226443** ⇧ **12-226436** ⇩	VA: with ball bearing
B3	**120i** 03/08 - 120 -125 kW	**37-161286**	**36-161379**	with standard chassis
B3	**120i** 03/08 - 120 -125 kW	**37-161279**	**36-161355**	with standard chassis; Heavy Duty Version .
B3	**125i** 03/08 - 160 kW	**37-161279**	**36-161355**	with standard chassis
B3	**125i** 03/08 - 160 kW	**37-161262**	**36-161331**	with standard chassis; Heavy Duty Version .
B4	**118d, 118i, 120d, 120i, 123d, 125i, 135i** 03/08 - 100 -225 kW	**22-152749** ↰ **22-152756** ↱	**19-152769**	with standard chassis
B4	**118d, 118i, 120d, 120i, 123d, 125i, 135i** 03/08 - 100 -225 kW	**22-152770** ↰ **22-152787** ↱	**19-152790**	with sports suspension
B6 Sport	**118d, 118i, 120d, 120i, 123d, 125i, 135i** 03/08 - 100 -225 kW	**35-115908** ↰ **35-115915** ↱	**24-115926**	without M-technics
B6 a10	**118d, 118i, 120d, 120i, 123d, 125i, 135i** 03/08 - 100 -225 kW	**31-181914** ↰ **31-181921** ↱	**26-181936**	
B8	**118d, 118i, 120d, 120i, 123d, 125i, 135i** 03/08 - 100 -225 kW	**35-115939** ↰ **35-115946** ↱	**24-115957**	with M-technics
B12 PK	**118d, 118i, 120d, 120i, 123d, 125i** 03/08 - 100 -160 kW	**46-180520**		Conditions see certificates VA: lowering (expertise): 30 mm; axle load to: 945 kg HA: without ride height adjustment; lowering (expertise): 30 mm; axle load to: 1120 kg
B14	**118d, 118i, 120d, 120i, 123d, 125i, 135i** 03/08 - 100 -225 kW	**47-120471**		Conditions see certificates VA: lowering (expertise): 30-50 mm; axle load to: 910 kg HA: lowering (expertise): 30-50 mm; axle load to: 1035 kg
B16 PSS10	**118d, 118i, 120d, 120i, 123d, 125i, 135i** 03/08 - 100 -225 kW	**48-131636**		Conditions see certificates VA: lowering (expertise): 30-50 mm; axle load to: 1020 kg HA: lowering (expertise): 30-50 mm; axle load to: 1200 kg
B16 PSS10	**118d, 118i, 120d, 120i, 123d, 125i, 135i** 03/08 - 100 -225 kW	**48-195232**		Conditions see certificates VA: lowering (expertise): 20-40 mm; axle load to: 1020 kg HA: lowering (expertise): 20-40 mm; axle load to: 1200 kg
B16 RC	**118d, 118i, 120d, 120i, 123d, 125i, 135i** 03/08 - 100 -225 kW	**49-131543**		Conditions see certificates VA: lowering (expertise): 30-50 mm; axle load to: 1020 kg HA: lowering (expertise): 30-50 mm; axle load to: 1200 kg

BMW 1 (F20)

B4	**116d, 116i, 118d, 118i, 120d, 125d, 125i** 06/11 - 85 -160 kW	**22-217981**	**19-217994**	with standard chassis; without electronic suspension control
B4	**116d, 116i, 118d, 118i, 120d, 125d, 125i** 06/11 - 85 -160 kW	**22-218001**	**19-218014**	with M-technics; without electronic suspension control
B6 Sport	**116d, 116i, 118d, 118i, 120d, 125d, 125i** 06/11 - 85 -160 kW	**35-217480**	**24-217859**	with standard chassis; without electronic suspension control
B8	**116d, 116i, 118d, 118i, 120d, 125d, 125i** 06/11 - 85 -160 kW	**35-217862**	**24-217873**	with M-technics; without electronic suspension control
B12 PK	**116d, 116i, 118d, 118i, 120d, 125d, 125i** 06/11 - 85 -160 kW	**46-223609**		without electronic suspension control; Conditions see certificates VA: lowering (expertise): 25 mm; axle load to: 905 kg HA: lowering (expertise): 30 mm; axle load to: 1090 kg
B14	**116d, 116i, 118d, 118i, 120d, 125d, 125i** 06/11 - 85 -160 kW	**47-217522**		without electronic suspension control; Conditions see certificates VA: lowering (expertise): 30-50 mm HA: lowering (expertise): 30-50 mm

BMW

BMW 1 (F20)

B16 PSS10	**116d, 116i, 118d, 118i, 120d, 125d, 125i** 06/11 - 85 -160 kW	48-217170	without electronic suspension control; Conditions see certificates VA: lowering (expertise): 30-50 mm HA: lowering (expertise): 30-50 mm
B16 RC	**116d, 116i, 118d, 118i, 120d, 125d, 125i** 06/11 - 85 -160 kW	49-224658	without electronic suspension control; Conditions see certificates VA: lowering (expertise): 30-50 mm HA: lowering (expertise): 30-50 mm
B16 RC	**116d, 116i, 118d, 118i, 120d, 125d, 125i** 06/11 - 85 -160 kW	49-224658	disconect EDC; with electronic suspension control; Conditions see certificates; Only in connection with 1x 31306792211 VA: lowering (expertise): 30-50 mm HA: lowering (expertise): 30-50 mm

BMW 3 (E21)

B3	**315** 03/81 - 03/84 55 kW	**36-159710**	**36-159819**	with standard chassis
B3	**316, 318** 08/75 - 01/77 66 -72 kW	**36-159741**	**36-159819**	with standard chassis
B3	**316, 318** 08/75 - 01/77 66 -72 kW		**36-159635**	with standard chassis; Heavy Duty Version .
B3	**316, 318, 318 i** 01/77 - 01/81 66 -77 kW	**36-159710**	**36-159819**	with standard chassis
B3	**316, 318, 318 i** 01/77 - 08/82 66 -77 kW	**36-159741**	**36-159635**	with standard chassis; Heavy Duty Version .
B3	**316, 318 i** 01/81 - 08/82 66 -77 kW		**36-159819**	with standard chassis
B3	**320, 320 i** 06/75 - 01/80 80 -92 kW	**36-159741**	**36-159819**	with standard chassis
B3	**320, 320 i, 320/6, 323 i** 06/75 - 08/82 80 -105 kW		**36-159635**	with standard chassis; Heavy Duty Version .
B3	**320/6, 323 i** 09/77 - 01/81 90 -105 kW	**36-159741**	**36-159819**	with standard chassis
B3	**320/6, 323 i** 01/81 - 08/82 90 -105 kW		**36-159819**	with standard chassis
B4	**315, 316, 318, 318 i, 320, 320 i, 320/6** 09/77 - 03/84 55 -92 kW	**21-030420**	**19-019802** **11-101345** SP	with standard chassis
B4	**323 i** 01/78 - 08/82 105 kW		**19-019802** **11-101345** SP	without M-technics
B6 Sport	**315, 316, 318, 318 i, 320, 320 i, 320/6** 09/77 - 03/84 55 -92 kW	**34-001219**	**24-006125**	
B6 Sport	**320, 320/6, 323 i** 08/75 - 08/82 80 -105 kW	**34-002230**	**24-006125**	with sports suspension

BMW 3 (E30)

B1	**315, 316, 316 (Ecotronic), 316 i, 316 i 1.8, 318 i, 318 is, 320 i, 320 is, 323 i, 324 d, 324 td, 325 e 2.7, 325 i, 325 i X, M3 2.3, M3 EVO I 2.3, M3 EVO II 2.5** 09/82 - 01/92 55 -175 kW	**12-117628**	**12-117093**	VA: Øi: 14 mm; Øa: 32 mm; with ball bearing
B2	**315** 09/82 - 12/91 55 kW	**16-031326** **11-101321** SP	**15-102096**	with standard chassis VA: outside diameter strut 45 mm

BMW

BMW 3 (E30)

B2	**316, 316 (Ecotronic), 316 i, 316 i 1.8, 318 i, 320 i, 323 i, 324 d, 325 e 2.7, 325 i** 09/82 - 11/89 63 -126 kW	**16-031326** **11-101321** SP	**15-102096**	with standard chassis VA: outside diameter strut 45 mm
B2	**316, 316 (Ecotronic), 316 i, 316 i 1.8, 318 i, 320 i, 323 i, 325 e 2.7, 325 i** 09/82 - 11/89 66 -126 kW	**16-101920** **11-101321** SP	**15-102096**	with standard chassis VA: outside diameter strut 51 mm
B3	**316, 316 (Ecotronic), 318 i** 09/82 - 06/91 66 -85 kW	**36-129263**	**38-129285**	with standard chassis
B3	**316, 316 (Ecotronic), 318 i** 09/82 - 06/91 66 -85 kW		**38-129292**	with standard chassis; Heavy Duty Version .
B3	**320 i, 323 i, 324 d, 325 i** 09/82 - 11/89 63 -126 kW	**36-129300**	**38-129292**	with standard chassis
B4	**316, 316 (Ecotronic), 316 i, 316 i 1.8, 318 i, 320 i, 323 i, 324 d, 325 e 2.7, 325 i** 09/82 - 11/89 63 -126 kW	**21-030499** **11-101321** SP	**19-019819**	with standard chassis VA: outside diameter strut 45 mm
B4	**316, 316 (Ecotronic), 316 i, 316 i 1.8, 318 i, 320 i, 323 i, 324 td, 325 e 2.7, 325 i** 09/82 - 11/89 66 -126 kW	**21-030505** **11-101321** SP	**19-019819**	with standard chassis VA: outside diameter strut 51 mm
B4	**318 is, 320 is** 05/88 - 08/91 100 -141 kW	**21-030505** **11-101321** SP	**19-019819**	with standard chassis VA: outside diameter strut 51 mm
B4	**325 i X** 03/86 - 08/91 125 -126 kW	**21-216381**	**19-019819**	with standard chassis
B6 Sport	**315, 316, 316 (Ecotronic), 316 i, 316 i 1.8, 318 i, 320 i, 320 is** 09/82 - 12/91 55 -141 kW	**34-181522**	**24-020282**	with standard chassis; mark: Heavy Duty VA: outside diameter strut 45 mm
B6 Sport	**315, 316, 316 (Ecotronic), 316 i, 316 i 1.8, 318 i, 320 i, 320 is** 09/82 - 12/91 55 -141 kW	**34-001363**	**24-020282**	with sports suspension VA: outside diameter strut 51 mm
B6 Sport	**318 is** 09/89 - 08/91 100 kW	**34-001363**	**24-020282**	with standard chassis VA: outside diameter strut 51 mm
B6 Sport	**318 is** 09/89 - 08/91 100 kW	**34-001363**	**24-007382**	with M-technics VA: outside diameter strut 51 mm
B6 Sport	**323 i, 324 d, 324 td, 325 e 2.7, 325 i** 09/82 - 11/89 63 -126 kW	**34-001363**	**24-020282**	with M-technics VA: outside diameter strut 51 mm
B6 Sport	**325 i X** 03/86 - 08/91 125 -126 kW	**34-002513**	**24-020282**	with standard chassis
B6 Sport	**M3 2.3, M3 EVO I 2.3, M3 EVO II 2.5** 07/86 - 01/92 143 -175 kW	**34-003350**	**24-020275**	VA: outside diameter strut 51 mm HA: charakteristic: 160/55
B6 Sport	**M3 2.3, M3 EVO I 2.3, M3 EVO II 2.5** 07/86 - 01/92 143 -175 kW	**34-003350**	**24-060653**	VA: outside diameter strut 51 mm HA: charakteristic: 140/60
B8	**315, 316, 316 (Ecotronic), 316 i, 316 i 1.8, 318 i, 320 i, 320 is, 323 i** 09/82 - 12/91 55 -141 kW	**34-003343**	**24-020275**	with standard chassis VA: outside diameter strut 45 mm HA: charakteristic: 160/55
B8	**315, 316, 316 (Ecotronic), 316 i, 316 i 1.8, 318 i, 320 i, 320 is, 323 i, 325 e 2.7** 09/82 - 12/91 55 -141 kW	**34-003350**	**24-020275**	with sports suspension VA: outside diameter strut 51 mm HA: charakteristic: 160/55
B8	**318 is** 09/89 - 08/91 100 kW	**34-003350**	**24-020275**	with standard chassis VA: outside diameter strut 51 mm HA: charakteristic: 160/55

BMW				
BMW 3 (E30)				
B8	**324 d, 324 td, 325 e 2.7, 325 i** 09/83 - 08/91 63 -126 kW	**34-003350**	**24-020275**	with M-technics VA: outside diameter strut 51 mm HA: charakteristic: 160/55
B12 PK	**316 i, 316 i 1.8, 318 i, 318 is** 09/82 - 08/91 73 -100 kW	**46-180803**		outside diameter strut 45 mm; Conditions see certificates VA: lowering (expertise): 30-40 mm; axle load to: 805 kg HA: lowering (expertise): 30 mm; axle load to: 905 kg
B12 PK	**316 i, 316 i 1.8, 318 i, 318 is** 09/82 - 08/91 73 -100 kW	**46-000118**		outside diameter strut 51 mm; Conditions see certificates VA: lowering (expertise): 30-40 mm; axle load to: 805 kg HA: lowering (expertise): 30 mm; axle load to: 905 kg
B12 PK	**320 i, 323 i** 09/82 - 08/86 92 -110 kW	**46-180797**		outside diameter strut 45 mm; Conditions see certificates VA: lowering (expertise): 30-40 mm; axle load to: 825 kg HA: lowering (expertise): 30 mm; axle load to: 905 kg
B12 PK	**320 i, 323 i, 325 e 2.7, 325 i** 09/82 - 11/89 90 -126 kW	**46-000101**		outside diameter strut 51 mm; Conditions see certificates VA: lowering (expertise): 30-40 mm; axle load to: 825 kg HA: lowering (expertise): 30 mm; axle load to: 905 kg
B12 PK	**320 i** 09/82 - 06/90 92 -110 kW	**46-180834**		outside diameter strut 45 mm; Conditions see certificates VA: lowering (expertise): 30-40 mm; axle load to: 865 kg HA: lowering (expertise): 30 mm; axle load to: 945 kg
B12 PK	**320 i, 323 i, 324 d, 324 td, 325 e 2.7, 325 i** 09/82 - 11/89 63 -126 kW	**46-000163**		outside diameter strut 51 mm; Conditions see certificates VA: lowering (expertise): 30-40 mm; axle load to: 865 kg HA: lowering (expertise): 30 mm; axle load to: 905 kg
MS	**M3 2.3, M3 EVO I 2.3, M3 EVO II 2.5** 07/86 - 01/92 143 -175 kW	**34-046296**	**24-000642**	mark: Rennen Gruppe N VA: charakteristic: 300/300 HA: charakteristic: 200/200
BMW 3 Touring (E30)				
B1	**316 i, 318 i, 320 i, 324 td, 325 i, 325 i X** 06/88 - 06/94 73 -125 kW	**12-117628**	**12-117093**	VA: Øi: 14 mm; Øa: 32 mm; with ball bearing
B2	**316 i, 318 i, 320 i, 324 td, 325 i** 07/87 - 06/94 73 -125 kW	**16-031326** **11-101321** *SP*	**15-102096**	with standard chassis VA: outside diameter strut 45 mm
B2	**316 i, 318 i, 320 i, 324 td, 325 i** 07/87 - 06/94 73 -125 kW	**16-101920** **11-101321** *SP*	**15-102096**	with standard chassis VA: outside diameter strut 51 mm
B3	**316 i, 318 i** 09/87 - 06/94 73 -85 kW	**36-129263**	**38-129322**	with standard chassis
B3	**320 i, 324 td, 325 i** 07/87 - 03/93 85 -125 kW	**36-129300**	**38-129322**	with standard chassis
B4	**316 i, 318 i, 320 i, 324 td, 325 i** 07/87 - 06/94 73 -125 kW	**21-030499** **11-101321** *SP*	**19-019819**	with standard chassis VA: outside diameter strut 45 mm
B4	**316 i, 318 i, 320 i, 324 td, 325 i** 07/87 - 06/94 73 -125 kW	**21-030505** **11-101321** *SP*	**19-019819**	with standard chassis VA: outside diameter strut 51 mm
B4	**325 i X** 06/88 - 10/93 125 kW	**21-216381**	**19-019819**	with standard chassis
B6 Sport	**316 i, 318 i, 320 i, 324 td, 325 i** 07/87 - 06/94 73 -125 kW	**34-181522**	**24-020282**	VA: outside diameter strut 45 mm
B6 Sport	**316 i, 318 i, 320 i, 324 td, 325 i** 07/87 - 06/94 73 -125 kW	**34-001363**	**24-020282**	with standard chassis VA: outside diameter strut 51 mm
B6 Sport	**325 i X** 06/88 - 10/93 125 kW	**34-002513**	**24-020282**	
B8	**316 i, 318 i, 320 i, 324 td, 325 i** 07/87 - 06/94 73 -125 kW	**34-003343**	**24-020275**	with standard chassis VA: outside diameter strut 45 mm HA: charakteristic: 160/55
B8	**316 i, 318 i, 320 i, 324 td, 325 i** 07/87 - 06/94 73 -125 kW	**34-003350**	**24-020275**	with standard chassis VA: outside diameter strut 51 mm HA: charakteristic: 160/55

BMW				
BMW 3 Convertible (E30)				
B1	**316 i, 318 i, 318i, 320 i, 325 i** 12/85 - 10/93 73 -126 kW	**12-117628**	**12-117093**	VA: Øi: 14 mm; Øa: 32 mm; with ball bearing
B2	**316 i, 318 i, 318i, 320 i, 325 i** 12/85 - 10/93 73 -126 kW	**16-101920** **11-101321** SP	**15-102096**	with standard chassis VA: outside diameter strut 51 mm
B3	**316 i, 318 i, 318i, 320 i, 325 i** 12/85 - 10/93 73 -126 kW	**36-153893**	**38-153907**	with standard chassis
B4	**316 i, 318 i, 318i, 320 i, 325 i** 12/85 - 10/93 73 -126 kW	**21-030505** **11-101321** SP	**19-019819**	with standard chassis VA: outside diameter strut 51 mm
B6 Sport	**316 i, 318 i, 318i, 320 i** 04/86 - 10/93 73 -103 kW	**34-181522**	**24-020282**	with standard chassis VA: outside diameter strut 45 mm
B6 Sport	**316 i, 318 i, 318i, 320 i, 325 i** 12/85 - 10/93 73 -126 kW	**34-001363**	**24-020282**	with standard chassis VA: outside diameter strut 51 mm
B6 Sport	**M3 2.3** 06/88 - 06/91 143 kW	**34-003350**	**24-020275**	with standard chassis VA: outside diameter strut 51 mm HA: charakteristic: 160/55
B6 Sport	**M3 2.3** 06/88 - 06/91 143 kW	**34-003350**	**24-060653**	with standard chassis VA: outside diameter strut 51 mm HA: charakteristic: 140/60
B8	**316 i, 318 i, 318i, 320 i** 04/86 - 10/93 73 -103 kW	**34-003343**	**24-020275**	with standard chassis VA: outside diameter strut 45 mm HA: charakteristic: 160/55
B8	**316 i, 318 i, 318i, 320 i, 325 i** 12/85 - 10/93 73 -126 kW	**34-003350**	**24-020275**	with standard chassis VA: outside diameter strut 51 mm HA: charakteristic: 160/55
B12 PK	**318 i, 318i** 06/88 - 10/93 83 -103 kW	**46-180827**		outside diameter strut 45 mm; Conditions see certificates VA: lowering (expertise): 30 mm; axle load to: 790 kg HA: lowering (expertise): 30 mm; axle load to: 945 kg
B12 PK	**318 i, 318i** 06/88 - 10/93 83 -103 kW	**46-000156**		outside diameter strut 51 mm; Conditions see certificates VA: lowering (expertise): 30 mm; axle load to: 790 kg HA: lowering (expertise): 30 mm; axle load to: 945 kg
B12 PK	**320 i, 325 i** 12/85 - 10/93 93 -126 kW	**46-180810**		outside diameter strut 45 mm; Conditions see certificates VA: lowering (expertise): 30-40 mm; axle load to: 865 kg HA: lowering (expertise): 30 mm; axle load to: 945 kg
B12 PK	**320 i, 325 i** 12/85 - 10/93 93 -126 kW	**46-000132**		outside diameter strut 51 mm; Conditions see certificates VA: lowering (expertise): 30-40 mm; axle load to: 865 kg HA: lowering (expertise): 30 mm; axle load to: 945 kg
MS	**M3 2.3** 06/88 - 06/91 143 kW	**34-046296**	**24-000642**	mark: Rennen Gruppe N VA: charakteristic: 300/300 HA: charakteristic: 200/200
BMW 3 (E36)				
B1	**316 i, 318 i, 320 i, 325 i, 325 td** 09/90 - 02/98 73 -141 kW	**12-116829**	**12-117109**	VA: 06/92 -> HA: with gasket
B1	**316 i, 318 i, 318 is, 318 tds, 323 i 2.5, 325 tds, 328 i** 05/93 - 02/98 66 -142 kW	**12-116829**	**12-117109**	VA: with ball bearing HA: with gasket
B3	**316 i, 318 i, 318 is, 323 i 2.5** 09/90 - 02/98 73 -125 kW	**36-129034**	**38-129070**	with standard chassis
B3	**316 i, 318 i, 318 is** 09/90 - 02/98 73 -103 kW	**36-129041**	**38-129087**	with standard chassis; Heavy Duty Version .
B3	**320 i, 325 i** 09/90 - 04/92 110 -141 kW	**36-129058**	**38-129070**	with standard chassis
B3	**320 i** 09/90 - 04/92 110 kW	**36-129065**	**38-129087**	with standard chassis; Heavy Duty Version .
B3	**320 i** 05/92 - 02/98 110 kW	**36-133161**	**38-129070**	with standard chassis

BMW

BMW 3 (E36)

B3	**320 i, 325 i, 325 tds** 05/92 - 02/98 105 -141 kW	**36-129065**	**38-129087**	with standard chassis; Heavy Duty Version .
B3	**323 i 2.5** 03/95 - 02/98 125 kW	**36-129041**		with standard chassis; Heavy Duty Version .
B3	**325 i** 09/90 - 04/92 141 kW	**36-129041**	**38-129087**	with standard chassis; Heavy Duty Version .
B3	**325 i, 325 td, 325 tds** 05/92 - 02/98 85 -141 kW	**36-129041**	**38-129070**	with standard chassis
B3	**328 i** 01/95 - 02/98 142 kW	**36-133161**	**38-129070**	with standard chassis
B3	**328 i** 01/95 - 02/98 142 kW	**36-129041**		with standard chassis; Heavy Duty Version .
B3	**318 tds** 01/95 - 02/98 66 kW	**36-129065**	**38-129087**	with standard chassis; Heavy Duty Version .
B3	**325 td** 09/91 - 04/92 85 kW	**36-133178**	**38-129070**	with standard chassis
B4	**316 i, 318 i** 09/90 - 05/92 73 -83 kW	**22-044150** **22-044167**	**19-103150** **11-181415** SP	with standard chassis
B4	**316 i, 318 i, 320 i, 325 i, 325 td** 06/92 - 02/98 73 -141 kW	**22-044198** **22-044204**	**19-103150** **11-181415** SP	with standard chassis
B4	**316 i, 318 i, 320 i, 325 i, 325 td** 06/92 - 02/98 73 -141 kW	**22-172518** **22-172525**	**19-103150** **11-181415** SP	with M-technics
B4	**316 i, 318 i, 318 is, 318 tds, 323 i 2.5, 325 tds, 328 i** 05/93 - 02/98 66 -142 kW	**22-044198** **22-044204**	**19-103150** **11-181415** SP	with standard chassis
B4	**316 i, 318 i, 318 is, 318 tds, 323 i 2.5, 325 tds, 328 i** 05/93 - 02/98 66 -142 kW	**22-172518** **22-172525**	**19-103150** **11-181415** SP	with M-technics
B4	**320 i, 325 i, 325 td** 09/90 - 05/92 85 -141 kW	**22-044174** **22-044181**	**19-103150** **11-181415** SP	with standard chassis
B6 Sport	**316 i, 318 i** 09/90 - 05/92 73 -83 kW	**22-003799** **22-003805**	**24-015257** **11-181415** SP	with standard chassis; twin-tube
B6 Sport	**316 i, 318 i, 318 is, 318 tds, 320 i, 323 i 2.5, 325 i, 325 td, 325 tds, 328 i** 06/92 - 02/98 66 -142 kW	**35-044000** **35-044017**	**24-027243** **11-181415** SP	with standard chassis VA: mono-tube
B6 Sport	**316 i, 318 i, 318 is, 318 tds, 320 i, 323 i 2.5, 325 i, 325 td, 325 tds, 328 i** 06/92 - 02/98 66 -142 kW	*22-040077* *22-040084*	**24-015257** **11-181415** SP	with standard chassis VA: twin-tube
B6 Sport	**320 i, 325 i, 325 td** 09/90 - 05/92 85 -141 kW	**22-181619** **22-181626**	**24-015257**	with standard chassis
B6 Sport	**M3 3.0, M3 3.2** 08/94 - 02/98 210 -236 kW	**35-042372** **35-042389**	**24-024532**	with standard chassis
B6 Sport	**M3 3.0, M3 3.2** 08/94 - 02/98 210 -236 kW	**35-105855** **35-105862**	**24-024532**	Only for United States of America
B8	**316 i, 318 i** 09/90 - 05/92 73 -83 kW	**22-003812** **22-003829**	**24-015264** **11-181415** SP	with standard chassis; with M-technics VA: mono-tube

BMW

BMW 3 (E36)

B8	**316 i, 318 i, 318 is, 318 tds, 320 i, 323 i 2.5, 325 i, 325 td, 325 tds, 328 i** 06/92 - 02/98 66 -142 kW	**35-044024** **35-044031**	**24-027250** **11-181415** SP	with standard chassis; with M-technics VA: mono-tube
B8	**316 i, 318 i, 318 is, 318 tds, 320 i, 323 i 2.5, 325 i, 325 td, 325 tds, 328 i** 06/92 - 02/98 66 -142 kW	*22-040091* *22-040107*	**24-015264** **11-181415** SP	with standard chassis; with M-technics VA: twin-tube
B8	**320 i, 325 i, 325 td** 09/90 - 05/92 85 -141 kW	**22-181633** **22-181640**	**24-015264**	with standard chassis; with M-technics
B10	**316 i, 318 i, 318 is, 318 tds** 06/92 - 02/98 66 -103 kW	**46-113047**		Conditions see certificates VA: lowering (expertise): 60 mm HA: lowering (expertise): 40 mm
B10	**320 i, 323 i 2.5, 325 i, 325 td, 325 tds, 328 i** 06/92 - 02/98 85 -142 kW	**46-113054**		Conditions see certificates VA: lowering (expertise): 60 mm HA: lowering (expertise): 40 mm
B12 PK	**316 i, 318 i** 09/90 - 05/92 73 -83 kW	**46-180933**		Conditions see certificates VA: lowering (expertise): 30 mm; axle load to: 830 kg HA: lowering (expertise): 30 mm; axle load to: 1070 kg
B12 PK	**316 i, 318 i, 318 is** 06/92 - 02/98 73 -103 kW	**46-000736**		Conditions see certificates VA: lowering (expertise): 30 mm; axle load to: 830 kg HA: lowering (expertise): 30 mm; axle load to: 1070 kg
B12 PK	**320 i, 325 i, 325 td** 09/90 - 05/92 85 -141 kW	**46-180940**		Conditions see certificates VA: lowering (expertise): 30 mm; axle load to: 890 kg HA: lowering (expertise): 30 mm; axle load to: 1070 kg
B12 PK	**M3 3.0** 08/94 - 09/95 210 kW	**46-188427**		Conditions see certificates VA: lowering (expertise): 25 mm; axle load to: 910 kg; Øi: 116 mm; spring HA: lowering (expertise): 15 mm; axle load to: 1090 kg
B12 PK	**M3 3.2** 09/95 - 02/98 236 kW	**46-000781**		Conditions see certificates VA: lowering (expertise): 25 mm; axle load to: 920 kg; Øi: 106 mm; spring HA: lowering (expertise): 15 mm; axle load to: 1130 kg
B12 PK	**318 tds, 320 i, 323 i 2.5, 325 i, 325 td, 325 tds, 328 i** 06/92 - 02/98 66 -142 kW	**46-180957**		Conditions see certificates VA: lowering (expertise): 30 mm; axle load to: 900 kg HA: lowering (expertise): 30 mm; axle load to: 1070 kg
B12 SL	**316 i, 318 i** 09/90 - 05/92 73 -83 kW	**46-181022**		Conditions see certificates; manual transmission VA: lowering (expertise): 45-50 mm; axle load to: 830 kg HA: lowering (expertise): 30 mm; axle load to: 1070 kg
B12 SL	**316 i, 318 i, 318 is** 06/92 - 02/98 73 -103 kW	**46-000750**		Conditions see certificates; manual transmission VA: lowering (expertise): 45-50 mm; axle load to: 830 kg HA: lowering (expertise): 30 mm; axle load to: 1070 kg
B12 SL	**320 i, 325 i, 325 td** 09/90 - 05/92 85 -141 kW	**46-181039**		Conditions see certificates VA: lowering (expertise): 45-50 mm; axle load to: 900 kg HA: lowering (expertise): 30 mm; axle load to: 1070 kg
B12 SL	**318 tds, 320 i, 323 i 2.5, 325 i, 325 td, 325 tds, 328 i** 06/92 - 02/98 66 -142 kW	**46-000767**		Conditions see certificates VA: lowering (expertise): 45-50 mm; axle load to: 900 kg HA: lowering (expertise): 30 mm; axle load to: 1070 kg
B14	**316 i, 318 i, 320 i, 325 i, 325 td** 11/91 - 05/92 73 -141 kW	**47-124813**		Conditions see certificates; Only in connection with 2 x 12-116829 VA: lowering (expertise): 35-55 mm; axle load to: 930 kg HA: lowering (expertise): 20-40 mm; axle load to: 1130 kg
B14	**316 i, 318 i, 318 is, 318 tds, 320 i, 323 i 2.5, 325 i, 325 td, 325 tds, 328 i** 06/92 - 02/98 66 -142 kW	**47-124813**		Conditions see certificates VA: lowering (expertise): 35-55 mm; axle load to: 930 kg HA: lowering (expertise): 20-40 mm; axle load to: 1130 kg
B16 PSS9	**316 i, 318 i, 320 i, 325 i, 325 td** 11/91 - 05/92 73 -141 kW	**48-080347**		Spacers required for several wheel/tyre combinations; Conditions see certificates VA: lowering (expertise): 35-55 mm; Only in connection with 2 x AFS-B682 HA: lowering (expertise): 20-40 mm
B16 PSS9	**316 i, 318 i, 318 is, 318 tds, 320 i, 323 i 2.5, 325 i, 325 td, 325 tds, 328 i** 06/92 - 02/98 66 -142 kW	**48-080347**		Spacers required for several wheel/tyre combinations; Conditions see certificates VA: lowering (expertise): 35-55 mm; axle load to: 930 kg HA: lowering (expertise): 20-40 mm; axle load to: 1130 kg

BMW

BMW 3 (E36)

B16 PSS9	**316 i, 320 i, 325 i, 325 td** 09/90 - 05/92 73 -141 kW	**48-080347**		Spacers required for several wheel/tyre combinations; Conditions see certificates VA: lowering (expertise): 35-55 mm; Only in connection with 2x AFS-B682; axle load to: 930 kg HA: lowering (expertise): 20-40 mm; axle load to: 1130 kg
B16 PSS9	**M3 3.0, M3 3.2** 08/94 - 02/98 210 -236 kW	**48-088459**		Conditions see certificates VA: lowering (expertise): 55 mm; axle load to: 930 kg HA: lowering (expertise): 40 mm; axle load to: 1130 kg
B16 PSS9	**M3 3.0** 08/94 - 09/95 210 kW	**48-115766**		mark: Club-Sport; Conditions see certificates; Øi: 116 mm; spring VA: lowering (expertise): 40 mm; axle load to: 930 kg HA: lowering (expertise): 40 mm; axle load to: 1130 kg
B16 PSS9	**M3 3.2** 09/95 - 02/98 236 kW	**48-115674**		mark: Club-Sport; Conditions see certificates; Øi: 106 mm; spring VA: lowering (expertise): 40 mm; axle load to: 930 kg HA: lowering (expertise): 40 mm; axle load to: 1130 kg
B16 BCS	**M3 3.0, M3 3.2** 08/94 - 02/98 210 -236 kW	**48-215855**		Conditions see certificates VA: lowering (expertise): 35-40 mm; axle load to: 930 kg HA: lowering (expertise): 35-40 mm; axle load to: 1130 kg

BMW 3 Compact (E36)

B1	**316 g, 316 i, 318 tds, 318 ti, 323 ti** 07/95 - 08/00 66 -125 kW	**12-116829**	**12-117109**	VA: with ball bearing HA: with gasket
B4	**316 g, 316 i, 318 tds, 318 ti** 07/95 - 08/00 66 -103 kW	**22-044198** ↰ **22-044204** ↱	**19-027531**	with standard chassis
B4	**316 g, 316 i, 318 tds, 318 ti, 323 ti** 07/95 - 08/00 66 -125 kW	**22-172518** ↰ **22-172525** ↱	**19-027531**	with M-technics
B6 Sport	**316 g, 316 i, 318 tds, 318 ti, 323 ti** 07/95 - 08/00 66 -125 kW	**35-044000** ↰ **35-044017** ↱	**24-020282**	with standard chassis VA: mono-tube
B6 Sport	**316 g, 316 i, 318 tds, 318 ti, 323 ti** 07/95 - 08/00 66 -125 kW	*22-040077* ↰ *22-040084* ↱	**24-020282**	with standard chassis VA: twin-tube
B8	**316 g, 316 i, 318 tds, 318 ti, 323 ti** 07/95 - 08/00 66 -125 kW	**35-044024** ↰ **35-044031** ↱	**24-020275**	with M-technics VA: mono-tube HA: charakteristic: 160/55
B8	**316 g, 316 i, 318 tds, 318 ti, 323 ti** 07/95 - 08/00 66 -125 kW	*22-040091* ↰ *22-040107* ↱	**24-020275**	with M-technics VA: twin-tube HA: charakteristic: 160/55
B12 PK	**316 i, 318 ti** 03/94 - 08/00 75 -103 kW	**46-180988**		Conditions see certificates VA: lowering (expertise): 30 mm; axle load to: 830 kg HA: lowering (expertise): 30 mm; axle load to: 970 kg
B12 PK	**318 tds, 323 ti** 01/95 - 08/00 66 -125 kW	**46-181008**		Conditions see certificates VA: lowering (expertise): 30 mm; axle load to: 900 kg HA: lowering (expertise): 30 mm; axle load to: 970 kg
B12 SL	**316 i, 318 ti** 03/94 - 08/00 75 -103 kW	**46-181077**		Conditions see certificates; manual transmission VA: lowering (expertise): 45-50 mm; axle load to: 830 kg HA: lowering (expertise): 30 mm; axle load to: 970 kg
B12 SL	**318 tds, 323 ti** 01/95 - 08/00 66 -125 kW	**46-181084**		Conditions see certificates VA: lowering (expertise): 45-50 mm; axle load to: 900 kg HA: lowering (expertise): 30 mm; axle load to: 970 kg
B16 PSS9	**316 g, 316 i, 318 tds, 318 ti, 323 ti** 07/95 - 08/00 66 -125 kW	**48-080408**		Spacers required for several wheel/tyre combinations; Conditions see certificates VA: lowering (expertise): 30-50 mm HA: lowering (expertise): 20-40 mm

BMW 3 Coupe (E36)

B1	**316 i, 318 is, 320 i, 323 i 2.5, 325 i, 328 i** 03/92 - 04/99 75 -142 kW	**12-116829**	**12-117109**	VA: 06/92 -> HA: with gasket
B3	**316 i, 318 is, 323 i 2.5, 325 i** 03/92 - 04/99 75 -141 kW	**36-129034**	**38-129070**	with standard chassis
B3	**316 i, 318 is, 323 i 2.5, 325 i, 328 i** 03/92 - 04/99 75 -142 kW	**36-129041**	**38-129087**	with standard chassis; Heavy Duty Version .

BMW

BMW 3 Coupe (E36)

B3	**320 i** 03/92 - 04/99 110 kW	**36-133161**	**38-129070**	with standard chassis
B3	**320 i** 03/92 - 04/99 110 kW	**36-129065**	**38-129087**	with standard chassis; Heavy Duty Version .
B4	**316 i, 318 is, 323 i 2.5, 328 i** 09/93 - 04/99 75 -142 kW	**22-044198** ↰ **22-044204** ↱	**19-103150** **11-181415** SP	with standard chassis
B4	**316 i, 318 is, 323 i 2.5, 328 i** 09/93 - 04/99 75 -142 kW	**22-172518** ↰ **22-172525** ↱	**19-103150** **11-181415** SP	with M-technics
B4	**318 is** 03/92 - 05/92 103 kW	**22-044150** ↰ **22-044167** ↱	**19-103150** **11-181415** SP	with standard chassis
B4	**318 is, 320 i, 325 i** 06/92 - 04/99 103 -141 kW	**22-044198** ↰ **22-044204** ↱	**19-103150** **11-181415** SP	with standard chassis
B4	**318 is, 320 i, 325 i** 06/92 - 04/99 103 -141 kW	**22-172518** ↰ **22-172525** ↱	**19-103150** **11-181415** SP	with M-technics
B4	**320 i, 325 i** 03/92 - 05/92 110 -141 kW	**22-044174** ↰ **22-044181** ↱	**19-103150** **11-181415** SP	with standard chassis
B6 Sport	**316 i, 318 is, 320 i, 323 i 2.5, 325 i, 328 i** 06/92 - 04/99 75 -142 kW	**35-044000** ↰ **35-044017** ↱	**24-027243** **11-181415** SP	with standard chassis VA: mono-tube
B6 Sport	**316 i, 318 is, 320 i, 323 i 2.5, 325 i, 328 i** 06/92 - 04/99 75 -142 kW	*22-040077* ↰ *22-040084* ↱	**24-015257** **11-181415** SP	with standard chassis VA: twin-tube
B6 Sport	**318 is** 03/92 - 05/92 103 kW	**22-003799** ↰ **22-003805** ↱	**24-015257**	with standard chassis
B6 Sport	**320 i, 325 i** 03/92 - 05/92 110 -141 kW	**22-181619** ↰ **22-181626** ↱	**24-015257**	with standard chassis
B6 Sport	**M3 3.0, M3 3.2** 10/92 - 04/99 210 -236 kW	**35-042372** ↰ **35-042389** ↱	**24-024532**	with standard chassis
B6 Sport	**M3 3.0, M3 3.2** 10/92 - 04/99 210 -236 kW	**35-105855** ↰ **35-105862** ↱	**24-024532**	Only for United States of America
B8	**316 i, 318 is, 320 i, 323 i 2.5, 325 i, 328 i** 06/92 - 04/99 75 -142 kW	**35-044024** ↰ **35-044031** ↱	**24-027250** **11-181415** SP	with M-technics VA: mono-tube
B8	**318 is** 03/92 - 05/92 103 kW	**22-003812** ↰ **22-003829** ↱	**24-015264**	with M-technics
B8	**320 i, 325 i** 03/92 - 05/92 110 -141 kW	**22-181633** ↰ **22-181640** ↱	**24-015264**	with standard chassis; with M-technics
B10	**316 i, 318 is** 06/92 - 04/99 75 -103 kW	**46-113047**		Conditions see certificates VA: lowering (expertise): 60 mm HA: lowering (expertise): 40 mm
B10	**320 i, 323 i 2.5, 325 i, 328 i** 06/92 - 04/99 110 -142 kW	**46-113054**		Conditions see certificates VA: lowering (expertise): 60 mm HA: lowering (expertise): 40 mm
B12 PK	**316 i, 318 is** 06/92 - 04/99 75 -103 kW	**46-000736**		Conditions see certificates VA: lowering (expertise): 30 mm; axle load to: 830 kg HA: lowering (expertise): 15 mm; axle load to: 1070 kg
B12 PK	**318 is** 03/92 - 05/92 103 kW	**46-180933**		Conditions see certificates VA: lowering (expertise): 30 mm; axle load to: 830 kg HA: lowering (expertise): 15 mm; axle load to: 1070 kg
B12 PK	**320 i, 323 i 2.5, 325 i, 328 i** 06/92 - 04/99 110 -142 kW	**46-180957**		Conditions see certificates VA: lowering (expertise): 30 mm; axle load to: 900 kg HA: lowering (expertise): 15 mm; axle load to: 1070 kg

BMW

BMW 3 Coupe (E36)

B12 PK	**M3 3.0** 10/92 - 10/95 210 -217 kW	**46-188427**		Conditions see certificates VA: lowering (expertise): 25 mm; axle load to: 910 kg; Øi: 116 mm; spring HA: lowering (expertise): 15 mm; axle load to: 1090 kg
B12 PK	**M3 3.2** 10/95 - 04/99 236 kW	**46-000781**		Conditions see certificates VA: lowering (expertise): 25 mm; axle load to: 920 kg; Øi: 106 mm; spring HA: lowering (expertise): 15 mm; axle load to: 1130 kg
B12 SL	**316 i, 318 is** 06/92 - 04/99 75 -103 kW	**46-000750**		Conditions see certificates; manual transmission VA: lowering (expertise): 45 mm; axle load to: 830 kg HA: lowering (expertise): 15 mm; axle load to: 1070 kg
B12 SL	**318 is** 03/92 - 05/92 103 kW	**46-181022**		Conditions see certificates; manual transmission VA: lowering (expertise): 45 mm; axle load to: 830 kg HA: lowering (expertise): 30 mm; axle load to: 1070 kg
B12 SL	**320 i, 325 i** 03/92 - 05/92 110 -141 kW	**46-181039**		Conditions see certificates VA: lowering (expertise): 45 mm; axle load to: 900 kg HA: lowering (expertise): 15 mm; axle load to: 1070 kg
B12 SL	**320 i, 323 i 2.5, 325 i, 328 i** 06/92 - 04/99 110 -142 kW	**46-000767**		Conditions see certificates VA: lowering (expertise): 45 mm; axle load to: 900 kg HA: lowering (expertise): 15 mm; axle load to: 1070 kg
B14	**316 i, 318 is, 320 i, 323 i 2.5, 325 i, 328 i** 06/92 - 04/99 75 -142 kW	**47-124813**		Conditions see certificates VA: lowering (expertise): 35-55 mm; axle load to: 930 kg HA: lowering (expertise): 20-40 mm; axle load to: 1130 kg
B14	**318 is, 325 i** 03/92 - 05/92 103 -141 kW	**47-124813**		Conditions see certificates; Only in connection with 2 x AFS-B682 VA: lowering (expertise): 35-55 mm HA: lowering (expertise): 20-40 mm
B16 PSS9	**316 i, 318 is, 320 i, 323 i 2.5, 325 i, 328 i** 06/92 - 04/99 75 -142 kW	**48-080347**		Spacers required for several wheel/tyre combinations; Conditions see certificates VA: lowering (expertise): 35-55 mm; axle load to: 930 kg HA: lowering (expertise): 20-40 mm; axle load to: 1130 kg
B16 PSS9	**318 is, 320 i, 325 i** 03/92 - 05/92 103 -141 kW	**48-080347**		Spacers required for several wheel/tyre combinations; Conditions see certificates; Only in connection with 2 x AFS-B682 VA: lowering (expertise): 35-55 mm HA: lowering (expertise): 20-40 mm
B16 PSS9	**M3 3.0, M3 3.2** 10/92 - 04/99 210 -236 kW	**48-088459**		Spacers required for several wheel/tyre combinations; Conditions see certificates VA: lowering (expertise): 45-55 mm HA: lowering (expertise): 20-40 mm
B16 PSS9	**M3 3.0** 10/92 - 10/95 210 -217 kW	**48-115766**		Spacers required for several wheel/tyre combinations; mark: Club-Sport; Conditions see certificates; Øi: 116 mm; spring VA: lowering (expertise): 30-40 mm; axle load to: 930 kg HA: lowering (expertise): 30-40 mm; axle load to: 1130 kg
B16 PSS9	**M3 3.2** 10/95 - 04/99 236 kW	**48-115674**		Spacers required for several wheel/tyre combinations; mark: Club-Sport; Conditions see certificates; Øi: 106 mm; spring VA: lowering (expertise): 30-40 mm; axle load to: 930 kg HA: lowering (expertise): 30-40 mm; axle load to: 1130 kg
B16 BCS	**M3 3.0, M3 3.2** 10/92 - 04/99 210 -236 kW	**48-215855**		Conditions see certificates VA: lowering (expertise): 35-40 mm; axle load to: 930 kg HA: lowering (expertise): 35-40 mm; axle load to: 1130 kg

BMW 3 Convertible (E36)

B1	**318 i, 320 i, 323 i 2.5, 325 i, 328 i** 03/93 - 04/99 85 -142 kW	**12-116829**	**12-117109**	VA: with ball bearing HA: with gasket
B3	**320 i, 323 i 2.5, 325 i** 03/93 - 04/99 110 -141 kW	**36-133185**	**38-129100**	with standard chassis; For vehicles with automatic convertible top; for vehicles without towbar
B3	**320 i, 323 i 2.5, 325 i** 03/93 - 04/99 110 -141 kW	**36-163045**	**38-153914**	with standard chassis; For vehicles with manual convertible top; for vehicles with towbar
B3	**320 i, 323 i 2.5, 325 i** 03/93 - 04/99 110 -141 kW	**36-133185**	**38-163036**	with standard chassis; For vehicles with automatic convertible top; for vehicles with towbar
B4	**318 i, 320 i, 323 i 2.5, 325 i, 328 i** 03/93 - 04/99 85 -142 kW	**22-044198** ↰ **22-044204** ↱	**19-103150** **11-181415** SP	with standard chassis

BMW

BMW 3 Convertible (E36)

B4	**318 i, 320 i, 323 i 2.5, 325 i, 328 i** 03/93 - 04/99 85 -142 kW	**22-172518** **22-172525**	**19-103150** **11-181415** SP	with M-technics
B6 Sport	**318 i, 320 i, 323 i 2.5, 325 i, 328 i** 03/93 - 04/99 85 -142 kW	**35-044000** **35-044017**	**24-027243** **11-181415** SP	with standard chassis VA: mono-tube
B6 Sport	**318 i, 320 i, 323 i 2.5, 325 i, 328 i** 03/93 - 04/99 85 -142 kW	*22-040077* *22-040084*	**24-015257** **11-181415** SP	with standard chassis VA: twin-tube
B6 Sport	**M3 3.0, M3 3.2** 01/94 - 04/99 210 -236 kW	**35-042372** **35-042389**	**24-024532**	with standard chassis
B6 Sport	**M3 3.0, M3 3.2** 01/94 - 04/99 210 -236 kW	**35-105855** **35-105862**	**24-024532**	Only for United States of America
B8	**318 i, 320 i, 323 i 2.5, 325 i, 328 i** 03/93 - 04/99 85 -142 kW	**35-044024** **35-044031**	**24-027250** **11-181415** SP	with M-technics VA: mono-tube
B8	**318 i, 320 i, 323 i 2.5, 325 i, 328 i** 03/93 - 04/99 85 -142 kW	*22-040091* *22-040107*	**24-015264** **11-181415** SP	with M-technics VA: twin-tube
B12 PK	**318 i** 01/94 - 04/99 85 kW	**46-180971**		Conditions see certificates VA: lowering (expertise): 30 mm; axle load to: 830 kg HA: lowering (expertise): 30 mm; axle load to: 1115 kg
B12 PK	**320 i, 323 i 2.5, 325 i, 328 i** 03/93 - 04/99 110 -142 kW	**46-180964**		Conditions see certificates VA: lowering (expertise): 30 mm; axle load to: 900 kg HA: lowering (expertise): 30 mm; axle load to: 1115 kg
B12 PK	**M3 3.0** 01/94 - 10/95 210 kW	**46-188427**		Conditions see certificates VA: lowering (expertise): 25 mm; axle load to: 910 kg; Øi: 116 mm; spring HA: lowering (expertise): 15 mm; axle load to: 1090 kg
B12 PK	**M3 3.2** 10/95 - 04/99 236 kW	**46-000781**		Conditions see certificates VA: lowering (expertise): 25 mm; axle load to: 920 kg; Øi: 106 mm; spring HA: lowering (expertise): 15 mm; axle load to: 1130 kg
B12 SL	**318 i** 01/94 - 04/99 85 kW	**46-181053**		Conditions see certificates; manual transmission VA: lowering (expertise): 45-50 mm; axle load to: 830 kg HA: lowering (expertise): 30 mm; axle load to: 970 kg
B12 SL	**320 i, 323 i 2.5, 325 i, 328 i** 03/93 - 04/99 110 -142 kW	**46-181060**		Conditions see certificates VA: lowering (expertise): 45-50 mm; axle load to: 900 kg HA: lowering (expertise): 30 mm; axle load to: 970 kg
B14	**318 i, 320 i, 323 i 2.5, 325 i, 328 i** 03/93 - 04/99 85 -142 kW	**47-124813**		Conditions see certificates VA: lowering (expertise): 35-55 mm; axle load to: 930 kg HA: lowering (expertise): 25-40 mm; axle load to: 1130 kg
B16 PSS9	**318 i, 320 i, 323 i 2.5, 325 i, 328 i** 03/93 - 04/99 85 -142 kW	**48-080347**		Spacers required for several wheel/tyre combinations; Conditions see certificates VA: lowering (expertise): 35-55 mm; axle load to: 930 kg HA: lowering (expertise): 20-40 mm; axle load to: 1130 kg
B16 PSS9	**M3 3.0, M3 3.2** 01/94 - 04/99 210 -236 kW	**48-088459**		Conditions see certificates VA: lowering (expertise): 35-55 mm HA: lowering (expertise): 20-40 mm
B16 PSS9	**M3 3.0** 01/94 - 10/95 210 kW	**48-115766**		mark: Club-Sport; Conditions see certificates; Øi: 116 mm; spring VA: lowering (expertise): 30-40 mm; axle load to: 930 kg HA: lowering (expertise): 30-40 mm; axle load to: 1130 kg
B16 PSS9	**M3 3.2** 10/95 - 04/99 236 kW	**48-115674**		mark: Club-Sport; Conditions see certificates; Øi: 106 mm; spring VA: lowering (expertise): 30-40 mm; axle load to: 930 kg HA: lowering (expertise): 30-40 mm; axle load to: 1130 kg

BMW 3 Touring (E36)

B1	**316 i, 318 i, 318 tds, 320 i, 323 i 2.5, 325 tds, 328 i** 01/95 - 10/99 66 -142 kW	**12-116829**	**12-117109**	VA: with ball bearing HA: with gasket
B3	**316 i, 318 i** 07/95 - 10/99 75 -85 kW	**36-163045**	**38-129070**	with standard chassis

BMW

BMW 3 Touring (E36)

B3	**316 i, 318 i** 07/95 - 10/99 75 -85 kW	**36-133161**	**38-129087**	with standard chassis; Heavy Duty Version .
B3	**320 i** 01/95 - 10/99 110 kW	**36-133161**	**38-129070**	with standard chassis
B3	**323 i 2.5** 09/95 - 10/99 125 kW	**36-129041**	**38-129070**	with standard chassis
B3	**318 tds, 328 i** 01/95 - 10/99 66 -142 kW	**36-129041**	**38-129070**	with standard chassis
B3	**318 tds, 320 i, 325 tds, 328 i** 01/95 - 10/99 66 -142 kW	**36-129065**	**38-129087**	with standard chassis; Heavy Duty Version .
B3	**325 tds** 01/95 - 10/99 105 kW	**36-129041**	**38-129070**	with standard chassis
B4	**316 i, 318 i, 318 tds, 320 i, 323 i 2.5, 325 tds, 328 i** 01/95 - 10/99 66 -142 kW	**22-044198** **22-044204**	**19-103150** **11-181415** SP	with standard chassis; without ride height adjustment
B4	**316 i, 318 i, 318 tds, 320 i, 323 i 2.5, 325 tds, 328 i** 01/95 - 10/99 66 -142 kW	**22-172518** **22-172525**	**19-103150** **11-181415** SP	with M-technics; without ride height adjustment
B6 Sport	**316 i, 318 i, 318 tds, 320 i, 323 i 2.5, 325 tds, 328 i** 01/95 - 10/99 66 -142 kW	**35-044000** **35-044017**	**24-027243** **11-181415** SP	with standard chassis; without ride height adjustment VA: mono-tube
B8	**316 i, 318 i, 318 tds, 320 i, 323 i 2.5, 325 tds, 328 i** 01/95 - 10/99 66 -142 kW	**35-044024** **35-044031**	**24-027250** **11-181415** SP	with M-technics; without ride height adjustment VA: mono-tube
B8	**316 i, 318 i, 318 tds, 320 i, 323 i 2.5, 325 tds, 328 i** 01/95 - 10/99 66 -142 kW	*22-040091* *22-040107*	**24-015264** **11-181415** SP	with M-technics; without ride height adjustment VA: twin-tube
B12 PK	**316 i, 318 i** 07/95 - 10/99 75 -85 kW	**46-181015**		Conditions see certificates; Self-levelling inactive after modification VA: lowering (expertise): 30 mm; axle load to: 830 kg HA: lowering (expertise): 30 mm; axle load to: 1115 kg
B12 PK	**318 tds, 320 i, 323 i 2.5, 325 tds, 328 i** 01/95 - 10/99 66 -142 kW	**46-180995**		Conditions see certificates VA: lowering (expertise): 30 mm; axle load to: 900 kg HA: lowering (expertise): 30 mm; axle load to: 1115 kg
B12 SL	**316 i, 318 i** 07/95 - 10/99 75 -85 kW	**46-181091**		Conditions see certificates; manual transmission; Self-levelling inactive after modification VA: lowering (expertise): 45-30 mm; axle load to: 830 kg HA: lowering (expertise): 30 mm; axle load to: 1115 kg
B12 SL	**318 tds, 320 i, 323 i 2.5, 325 tds, 328 i** 01/95 - 10/99 66 -142 kW	**46-181046**		Conditions see certificates VA: lowering (expertise): 45-30 mm; axle load to: 900 kg HA: lowering (expertise): 30 mm; axle load to: 1115 kg
B14	**316 i, 318 i, 318 tds, 320 i, 323 i 2.5, 325 tds, 328 i** 01/95 - 10/99 66 -142 kW	**47-124813**		Conditions see certificates; Self-levelling inactive after modification VA: lowering (expertise): 35-55 mm; axle load to: 930 kg HA: lowering (expertise): 25-45 mm; axle load to: 1130 kg
B16 PSS9	**316 i, 318 i, 318 tds, 320 i, 323 i 2.5, 325 tds, 328 i** 01/95 - 10/99 66 -142 kW	**48-080347**		Spacers required for several wheel/tyre combinations; Conditions see certificates; Self-levelling inactive after modification VA: lowering (expertise): 35-55 mm; axle load to: 930 kg HA: lowering (expertise): 20-40 mm; axle load to: 1130 kg

BMW 3 (E46)

B1	**316 i, 318 d, 318 i, 320 d, 320 i, 323 i, 325 i, 325 xi, 328 i, 330 d, 330 i, 330 xd, 330 xi** 10/99 - 02/05 77 -170 kW	**12-117260**	**12-117109**	VA: with ball bearing HA: with gasket
B3	**316 i** 09/98 - 02/05 77 -85 kW	**36-129249**	**38-129216**	with standard chassis

BMW

BMW 3 (E46)

B3	**316 i, 318 i** 02/98 - 02/05 77 -105 kW	**36-129256**	**38-129230**	with standard chassis; Heavy Duty Version .
B3	**318 i** 02/98 - 02/05 87 -105 kW	**36-129249**	**38-129223**	with standard chassis
B3	**320 i** 03/98 - 02/05 110 -125 kW	**36-129256**	**38-129223**	with standard chassis
B3	**325 xi, 330 xd, 330 xi** 06/00 - 02/05 135 -170 kW	**36-164295**	**38-129230**	with standard chassis
B3	**318 d, 320 d, 323 i, 325 i, 328 i** 02/98 - 02/05 85 -142 kW	**36-129256**	**38-133190**	with standard chassis
B3	**318 d, 320 d, 320 i, 323 i, 325 i, 328 i** 02/98 - 02/05 85 -142 kW	**36-133208**	**38-129230**	with standard chassis; Heavy Duty Version .
B3	**330 d, 330 i** 10/99 - 02/05 135 -170 kW	**36-133208**	**38-133190**	with standard chassis
B3	**330 d, 330 i** 10/99 - 02/05 135 -170 kW	**36-164295**	**38-129230**	with standard chassis; Heavy Duty Version .
B4	**316 i, 318 d, 318 i, 320 d** 04/98 - 02/05 77 -110 kW	**22-103130** **22-103147**	**19-103150** **11-181415** SP	with standard chassis
B4	**316 i, 318 d, 318 i, 320 d, 320 i, 323 i, 325 i, 328 i, 330 d, 330 i** 10/99 - 02/05 77 -170 kW	**22-139931** **22-139948**	**19-103150** **11-181415** SP	with M-technics
B4	**320 i, 323 i, 325 i, 328 i, 330 d, 330 i** 02/98 - 02/05 110 -170 kW	**22-103093** **22-103109**	**19-103150** **11-181415** SP	with standard chassis
B4	**325 xi, 330 xd, 330 xi** 06/00 - 02/05 135 -170 kW	**22-220578** **22-220585**	**19-220598** **11-181415** SP	with standard chassis
B6 Sport	**316 i, 318 d, 318 i, 320 d, 320 i, 323 i, 325 i, 328 i, 330 d, 330 i** 10/99 - 02/05 77 -170 kW	**35-115045** **35-115052**	**24-026970** **11-181415** SP	with standard chassis VA: mono-tube
B6 Sport	**316 i, 318 d, 318 i, 320 d, 320 i, 323 i, 325 i, 328 i, 330 d, 330 i** 10/99 - 02/05 77 -170 kW	*22-043344* *22-043351*	**24-026970** **11-181415** SP	with standard chassis VA: serie production spring seat must be used; twin-tube
B6 Sport	**325 xi, 330 xd, 330 xi** 06/00 - 02/05 135 -170 kW	**22-052810** **22-052827**	**24-068659** **11-181415** SP	with standard chassis VA: serie production spring seat must be used
B6 a10	**316 i, 318 d, 318 i, 320 d, 320 i, 323 i, 325 i, 328 i, 330 d, 330 i** 10/99 - 02/05 77 -170 kW	**31-181884** **31-181891**	**26-181905**	with standard chassis; with M-technics
B8	**316 i, 318 d, 318 i, 320 d, 320 i, 323 i, 325 i, 328 i, 330 d, 330 i** 10/99 - 02/05 77 -170 kW	**35-115069** **35-115076**	**24-026987** **11-181415** SP	with M-technics VA: mono-tube
B8	**316 i, 318 d, 318 i, 320 d, 320 i, 323 i, 325 i, 328 i, 330 d, 330 i** 10/99 - 02/05 77 -170 kW	**35-115106** **35-115113**	**24-026987** **11-181415** SP	with lowered chassis VA: rebound: 45 mm
B8	**316 i, 318 d, 318 i, 320 d, 320 i, 323 i, 325 i, 328 i, 330 d, 330 i** 10/99 - 02/05 77 -170 kW	*22-043832* *22-043849*	**24-026987** **11-181415** SP	with M-technics VA: serie production spring seat must be used; twin-tube
B8	**325 xi, 330 xd, 330 xi** 06/00 - 02/05 135 -170 kW	**22-052834** **22-052841**	**24-068666** **11-181415** SP	with M-technics VA: serie production spring seat must be used
B12 PK	**316 i, 318 i** 02/98 - 02/05 77 -105 kW	**46-180001**		Conditions see certificates VA: lowering (expertise): 30 mm; axle load to: 895 kg HA: without ride height adjustment; lowering (expertise): 20-25 mm; axle load to: 1190 kg

BMW			
BMW 3 (E46)			
B12 PK **325 xi, 330 xi** 06/00 - 02/05 141 -170 kW	**46-180032**		serie production spring seat must be used; Conditions see certificates VA: lowering (expertise): 30 mm; axle load to: 1010 kg HA: without ride height adjustment; lowering (expertise): 20-25 mm; axle load to: 1250 kg
B12 PK **318 d, 320 d, 320 i, 323 i, 325 i, 328 i, 330 i** 06/00 - 02/05 85 -170 kW	**46-180018**		Conditions see certificates VA: lowering (expertise): 30 mm; axle load to: 970 kg HA: without ride height adjustment; lowering (expertise): 20-25 mm; axle load to: 1190 kg
B12 PK **330 d** 10/99 - 02/05 135 -150 kW	**46-180025**		Conditions see certificates VA: lowering (expertise): 30 mm; axle load to: 1030 kg HA: without ride height adjustment; lowering (expertise): 20-25 mm; axle load to: 1190 kg
B12 PK **330 xd** 06/00 - 02/05 135 -150 kW	**46-180049**		serie production spring seat must be used; Conditions see certificates VA: lowering (expertise): 30 mm; axle load to: 1065 kg HA: without ride height adjustment; lowering (expertise): 20-25 mm; axle load to: 1250 kg
B12 SL **316 i, 318 i** 02/98 - 02/05 77 -105 kW	**46-180131**		Conditions see certificates VA: lowering (expertise): 45-50 mm; axle load to: 895 kg HA: without ride height adjustment; lowering (expertise): 20-25 mm; axle load to: 1045 kg
B12 SL **330 i** 06/00 - 02/05 170 kW	**46-180117**		Conditions see certificates; manual transmission VA: lowering (expertise): 45-50 mm; axle load to: 935 kg HA: without ride height adjustment; lowering (expertise): 20-25 mm; axle load to: 1190 kg
B12 SL **318 d, 320 d, 320 i, 323 i, 325 i, 328 i** 02/98 - 02/05 85 -142 kW	**46-180117**		Conditions see certificates VA: lowering (expertise): 45-50 mm; axle load to: 935 kg HA: without ride height adjustment; lowering (expertise): 20-25 mm; axle load to: 1190 kg
B14 **316 i, 318 d, 318 i, 320 d, 320 i, 323 i, 325 i, 328 i, 330 d, 330 i** 10/99 - 02/05 77 -170 kW	**47-126848**		Conditions see certificates VA: lowering (expertise): 35-50 mm; axle load to: 1030 kg HA: lowering (expertise): 25-40 mm; axle load to: 1190 kg
B16 PSS10 **316 i, 318 d, 318 i, 320 d, 320 i, 323 i, 325 i, 328 i, 330 d, 330 i** 10/99 - 02/05 77 -170 kW	**48-126380**		Conditions see certificates VA: lowering (expertise): 35-50 mm; axle load to: 1030 kg HA: lowering (expertise): 25-40 mm; axle load to: 1190 kg
B16 RC **316 i, 318 d, 318 i, 320 d, 320 i, 323 i, 325 i, 328 i, 330 d, 330 i** 10/99 - 02/05 77 -170 kW	**49-135121**		Conditions see certificates VA: lowering (expertise): 35-50 mm; axle load to: 1030 kg HA: lowering (expertise): 25-40 mm; axle load to: 1190 kg
MS **316 i, 318 d, 318 i, 320 d, 320 i, 323 i, 325 i, 328 i, 330 d, 330 i** 10/99 - 02/05 77 -170 kW	*31-633499* (HA) *31-633505* (HA)	*26-602059*	mark: VLN VA: Mechanically adjustable shock strength; Height Adjustable HA: Mechanically adjustable shock strength
BMW 3 Compact (E46)			
B1 **1.6 Ti, 2.0 TD, 316 ti, 318 td, 318 ti, 320 td, 325 ti** 06/01 - 02/05 77 -141 kW	**12-117260**	**12-117109**	VA: with ball bearing HA: with gasket
B4 **1.6 Ti, 2.0 TD, 316 ti, 318 td, 318 ti, 320 td, 325 ti** 06/01 - 02/05 77 -141 kW	**22-139931** (HA) **22-139948** (HA)	**19-103112** **11-181415** SP	with standard chassis
B6 Sport **1.6 Ti, 2.0 TD, 316 ti, 318 td, 318 ti, 320 td, 325 ti** 06/01 - 02/05 77 -141 kW	**35-115069** (HA) **35-115076** (HA)	**24-026970** **11-181415** SP	with standard chassis VA: mono-tube
B6 Sport **1.6 Ti, 2.0 TD, 316 ti, 318 td, 318 ti, 320 td, 325 ti** 06/01 - 02/05 77 -141 kW	*22-043832* (HA) *22-043849* (HA)	**24-026970** **11-181415** SP	with standard chassis VA: serie production spring seat must be used; twin-tube
B8 **1.6 Ti, 2.0 TD, 316 ti, 318 td, 318 ti, 320 td, 325 ti** 06/01 - 02/05 77 -141 kW	**35-115106** (HA) **35-115113** (HA)	**24-067577** **11-181415** SP	with M-technics VA: rebound: 45 mm; mono-tube
B8 **1.6 Ti, 2.0 TD, 316 ti, 318 td, 318 ti, 320 td, 325 ti** 06/01 - 02/05 77 -141 kW	*22-051707* (HA) *22-051714* (HA)	**24-067577** **11-181415** SP	with M-technics VA: serie production spring seat must be used; twin-tube

BMW

BMW 3 Compact (E46)

B12 PK	**1.6 Ti, 316 ti, 318 ti** 09/01 - 02/05 77 -105 kW	**46-180070**		Conditions see certificates VA: lowering (expertise): 25 mm; axle load to: 895 kg HA: without ride height adjustment; lowering (expertise): 15 mm; axle load to: 1045 kg
B12 PK	**2.0 TD, 318 td, 320 td, 325 ti** 06/01 - 02/05 85 -141 kW	**46-180087**		Conditions see certificates VA: lowering (expertise): 25 mm; axle load to: 970 kg HA: without ride height adjustment; lowering (expertise): 15 mm; axle load to: 1045 kg
B12 SL	**1.6 Ti, 316 ti, 318 ti** 09/01 - 02/05 77 -105 kW	**46-180100**		Conditions see certificates VA: lowering (expertise): 30-35 mm; axle load to: 895 kg HA: without ride height adjustment; lowering (expertise): 15 mm; axle load to: 1190 kg
B12 SL	**2.0 TD, 318 td, 320 td** 09/01 - 02/05 85 -110 kW	**46-180124**		Conditions see certificates VA: lowering (expertise): 30-35 mm; axle load to: 935 kg HA: without ride height adjustment; lowering (expertise): 15 mm; axle load to: 1190 kg
B12 SL	**325 ti** 06/01 - 02/05 141 kW	**46-180124**		Conditions see certificates; manual transmission VA: lowering (expertise): 30-35 mm; axle load to: 935 kg HA: without ride height adjustment; lowering (expertise): 15 mm; axle load to: 1190 kg
B16 PSS9	**1.6 Ti, 2.0 TD, 316 ti, 318 td, 318 ti, 320 td, 325 ti** 06/01 - 02/05 77 -141 kW	*48-088435*		Conditions see certificates VA: lowering (expertise): 35 mm; axle load to: 1000 kg HA: lowering (expertise): 20 mm; axle load to: 1060 kg

BMW 3 Coupe (E46)

B1	**316 Ci, 318 Ci, 320 Cd, 320 Ci, 323 Ci, 325 Ci, 328 Ci, 330 Cd, 330 ci, 330 xi, M3 3.2** 04/99 - 77 -252 kW	**12-117260**	**12-117109**	VA: with ball bearing HA: with gasket
B3	**316 Ci** 04/00 - 77 -85 kW	**36-129249**	**38-129216**	with standard chassis
B3	**316 Ci, 318 Ci** 11/99 - 77 -110 kW	**36-129256**	**38-129230**	with standard chassis; Heavy Duty Version .
B3	**318 Ci** 11/99 - 87 -110 kW	**36-129249**	**38-129223**	with standard chassis
B3	**330 xi** 06/00 - 170 kW	**36-164295**	**38-129230**	with standard chassis
B3	**320 Cd, 320 Ci, 323 Ci, 325 Ci, 328 Ci** 04/99 - 110 -142 kW	**36-129256**	**38-133190**	with standard chassis
B3	**320 Cd, 320 Ci, 323 Ci, 325 Ci, 328 Ci** 04/99 - 110 -142 kW	**36-133208**	**38-129230**	with standard chassis; Heavy Duty Version .
B3	**330 Cd, 330 ci** 06/00 - 150 -170 kW	**36-133208**	**38-133190**	with standard chassis
B3	**330 Cd, 330 ci** 06/00 - 150 -170 kW	**36-164295**	**38-129230**	with standard chassis; Heavy Duty Version .
B4	**316 Ci, 318 Ci** 11/99 - 77 -110 kW	**22-103130** ↰ **22-103147** ↱	**19-103150** **11-181415** SP	with standard chassis
B4	**316 Ci, 318 Ci, 320 Cd, 320 Ci, 323 Ci, 325 Ci, 328 Ci, 330 Cd, 330 ci** 04/99 - 77 -170 kW	**22-139931** ↰ **22-139948** ↱	**19-103150** **11-181415** SP	with M-technics
B4	**M3 3.2** 06/00 - 252 kW	**22-199492** ↰ **22-199508** ↱	**19-199511**	with standard chassis
B4	**320 Cd, 320 Ci, 323 Ci, 325 Ci, 328 Ci, 330 Cd, 330 ci** 06/00 - 110 -170 kW	**22-103093** ↰ **22-103109** ↱	**19-103150** **11-181415** SP	with standard chassis

BMW

BMW 3 Coupe (E46)

B6 Sport	**316 Ci, 318 Ci, 320 Cd, 320 Ci, 323 Ci, 325 Ci, 328 Ci, 330 Cd, 330 ci** 04/99 - 77 -170 kW	**35-115045** **35-115052**	**24-026970** **11-181415** SP	with standard chassis VA: mono-tube
B6 Sport	**316 Ci, 318 Ci, 320 Cd, 320 Ci, 323 Ci, 325 Ci, 328 Ci, 330 Cd, 330 ci** 04/99 - 77 -170 kW	*22-043344* *22-043351*	**24-026970** **11-181415** SP	with standard chassis VA: serie production spring seat must be used; twin-tube
B6 Sport	**330 xi** 06/00 - 170 kW	**22-052810** **22-052827**	**24-068659** **11-181415** SP	with standard chassis VA: serie production spring seat must be used
B6 Sport	**M3 3.2, M3 CSL** 06/00 - 252 -265 kW	**35-142102** **35-142119**	**24-143998**	Only in connection with 31 32 1 139 423 (2x)
B6 a10	**316 Ci, 318 Ci, 320 Cd, 320 Ci, 323 Ci, 325 Ci, 328 Ci, 330 Cd, 330 ci** 04/99 - 77 -170 kW	**31-181884** **31-181891**	**26-181905**	with standard chassis; with M-technics
B8	**316 Ci, 318 Ci, 320 Cd, 320 Ci, 323 Ci, 325 Ci, 328 Ci, 330 Cd, 330 ci** 04/99 - 77 -170 kW	**35-115069** **35-115076**	**24-026987** **11-181415** SP	with M-technics VA: mono-tube
B8	**316 Ci, 318 Ci, 320 Cd, 320 Ci, 323 Ci, 325 Ci, 328 Ci, 330 Cd, 330 ci** 04/99 - 77 -170 kW	**35-115106** **35-115113**	**24-026987** **11-181415** SP	with M-technics VA: rebound: 45 mm
B8	**316 Ci, 318 Ci, 320 Cd, 320 Ci, 323 Ci, 325 Ci, 328 Ci, 330 Cd, 330 ci** 04/99 - 77 -170 kW	*22-043832* *22-043849*	**24-026987** **11-181415** SP	with M-technics VA: serie production spring seat must be used; twin-tube
B8	**330 xi** 06/00 - 170 kW	**22-052834** **22-052841**	**24-068666** **11-181415** SP	with M-technics VA: serie production spring seat must be used
B12 PK	**316 Ci, 318 Ci** 11/99 - 77 -110 kW	**46-180001**		Conditions see certificates VA: lowering (expertise): 25 mm; axle load to: 895 kg HA: without ride height adjustment; lowering (expertise): 10 mm; axle load to: 1190 kg
B12 PK	**M3 3.2** 06/00 - 252 kW	**46-000613**		Conditions see certificates; Only in connection with 31 32 1 139 423 (2x) VA: lowering (expertise): 20 mm; axle load to: 990 kg HA: lowering (expertise): 10 mm; axle load to: 1170 kg
B12 PK	**320 Cd, 320 Ci, 323 Ci, 325 Ci, 328 Ci, 330 ci** 06/00 - 110 -170 kW	**46-180018**		Conditions see certificates VA: lowering (expertise): 25 mm; axle load to: 970 kg HA: without ride height adjustment; lowering (expertise): 10 mm; axle load to: 1190 kg
B12 PK	**330 Cd** 03/03 - 150 kW	**46-180025**		Conditions see certificates VA: lowering (expertise): 25 mm; axle load to: 1030 kg HA: without ride height adjustment; lowering (expertise): 10 mm; axle load to: 1190 kg
B12 SL	**316 Ci, 318 Ci** 09/01 - 85 -110 kW	**46-180131**		Conditions see certificates VA: lowering (expertise): 30-35 mm; axle load to: 895 kg HA: without ride height adjustment; lowering (expertise): 15 mm; axle load to: 1045 kg
B12 SL	**320 Ci, 323 Ci, 325 Ci, 328 Ci** 04/99 - 110 -142 kW	**46-180117**		Conditions see certificates VA: lowering (expertise): 30-35 mm; axle load to: 935 kg HA: without ride height adjustment; lowering (expertise): 15 mm; axle load to: 1190 kg
B12 SL	**330 ci** 06/00 - 170 kW	**46-180117**		Conditions see certificates; manual transmission VA: lowering (expertise): 30-35 mm; axle load to: 935 kg HA: without ride height adjustment; lowering (expertise): 15 mm; axle load to: 1190 kg
B14	**316 Ci, 318 Ci, 320 Cd, 320 Ci, 323 Ci, 325 Ci, 328 Ci, 330 Cd, 330 ci** 04/99 - 77 -170 kW	**47-126848**		Conditions see certificates VA: lowering (expertise): 35-50 mm; axle load to: 1030 kg HA: lowering (expertise): 25-40 mm; axle load to: 1190 kg
B16 PSS10	**316 Ci, 318 Ci, 320 Cd, 320 Ci, 323 Ci, 325 Ci, 328 Ci, 330 Cd, 330 ci** 04/99 - 77 -170 kW	**48-126380**		Conditions see certificates VA: lowering (expertise): 30-50 mm; axle load to: 1030 kg HA: lowering (expertise): 20-40 mm; axle load to: 1190 kg
B16 PSS10	**M3 3.2, M3 CSL** 06/00 - 252 -265 kW	**48-126687**		Conditions see certificates; Only in connection with 31 32 1 139 423 (2x) VA: lowering (expertise): 15-35 mm; axle load to: 990 kg HA: lowering (expertise): 20-35 mm; axle load to: 1170 kg

BMW

BMW 3 Coupe (E46)

B16 RC	**316 Ci, 318 Ci, 320 Cd, 320 Ci, 323 Ci, 325 Ci, 328 Ci, 330 Cd, 330 ci** 04/99 - 77 -170 kW	**49-135121**		Conditions see certificates VA: lowering (expertise): 35-50 mm; axle load to: 1030 kg HA: lowering (expertise): 25-40 mm; axle load to: 1190 kg
B16 BCS	**M3 3.2, M3 CSL** 06/00 - 252 -265 kW	**48-213660**		Conditions see certificates VA: lowering (expertise): 35-40 mm; axle load to: 990 kg HA: lowering (expertise): 35-40 mm; axle load to: 1170 kg
MS	**316 Ci, 318 Ci, 320 Cd, 320 Ci, 325 Ci, 328 Ci, 330 Cd, 330 ci, M3 3.2, M3 CSL** 04/99 - 77 -265 kW	*31-633499* *31-633505*	*26-602059*	mark: VLN VA: Mechanically adjustable shock strength; Height Adjustable HA: Mechanically adjustable shock strength

BMW 3 Convertible (E46)

B1	**318 Ci, 320 Cd, 320 Ci, 323 Ci, 325 Ci, 330 Cd, 330 Ci** 06/00 - 105 -170 kW	**12-117260**	**12-117895**	VA: with ball bearing
B3	**318 Ci, 320 Cd, 320 Ci, 323 Ci, 325 Ci** 09/00 - 105 -141 kW	**36-129256**	**38-129230**	with standard chassis
B3	**318 Ci, 320 Cd, 320 Ci, 323 Ci, 325 Ci** 09/00 - 105 -141 kW	**36-133208**		with standard chassis; Heavy Duty Version .
B3	**330 Cd, 330 Ci** 06/00 - 150 -170 kW	**36-133208**	**38-129230**	with standard chassis
B3	**330 Cd, 330 Ci** 06/00 - 150 -170 kW	**36-164295**		with standard chassis; Heavy Duty Version .
B4	**318 Ci** 09/01 - 105 -110 kW	**22-103130** **22-103147**	**19-103150** **11-181415** SP	with standard chassis
B4	**318 Ci, 320 Cd, 320 Ci, 323 Ci, 325 Ci, 330 Cd, 330 Ci** 06/00 - 105 -170 kW	**22-139931** **22-139948**	**19-103150** **11-181415** SP	with M-technics
B4	**M3 3.2** 04/01 - 252 kW	**22-199492** **22-199508**	**19-199511**	with standard chassis
B4	**320 Cd, 320 Ci, 323 Ci, 325 Ci, 330 Cd, 330 Ci** 06/00 - 110 -170 kW	**22-103093** **22-103109**	**19-103150** **11-181415** SP	with standard chassis
B6 Sport	**318 Ci, 320 Cd, 320 Ci, 323 Ci, 325 Ci, 330 Cd, 330 Ci** 06/00 - 105 -170 kW	**35-115045** **35-115052**	**24-026970** **11-181415** SP	with standard chassis VA: mono-tube
B6 Sport	**318 Ci, 320 Cd, 320 Ci, 323 Ci, 325 Ci, 330 Cd, 330 Ci** 06/00 - 105 -170 kW	*22-043344* *22-043351*	**24-026970** **11-181415** SP	with standard chassis VA: serie production spring seat must be used; twin-tube
B6 Sport	**M3 3.2** 04/01 - 252 kW	**35-142102** **35-142119**	**24-143998**	
B6 a10	**318 Ci, 320 Cd, 320 Ci, 323 Ci, 325 Ci, 330 Cd, 330 Ci** 06/00 - 105 -170 kW	**31-181884** **31-181891**	**26-181905**	with standard chassis; with M-technics
B8	**318 Ci, 320 Cd, 320 Ci, 323 Ci, 325 Ci, 330 Cd, 330 Ci** 06/00 - 105 -170 kW	**35-115069** **35-115076**	**24-026987** **11-181415** SP	with M-technics VA: mono-tube
B8	**318 Ci, 320 Cd, 320 Ci, 323 Ci, 325 Ci, 330 Cd, 330 Ci** 06/00 - 105 -170 kW	**35-115106** **35-115113**	**24-026987** **11-181415** SP	with lowered chassis VA: rebound: 45 mm
B8	**318 Ci, 320 Cd, 320 Ci, 323 Ci, 325 Ci, 330 Cd, 330 Ci** 06/00 - 105 -170 kW	*22-043832* *22-043849*	**24-026987** **11-181415** SP	with M-technics VA: serie production spring seat must be used; twin-tube

BMW				
BMW 3 Convertible (E46)				
B12 PK	**318 Ci** 09/01 - 105 -110 kW	**46-180001**		Conditions see certificates VA: lowering (expertise): 30 mm; axle load to: 895 kg HA: without ride height adjustment; lowering (expertise): 15-20 mm; axle load to: 1190 kg
B12 PK	**M3 3.2** 04/01 - 252 kW	**46-000613**		Conditions see certificates; Only in connection with 31 32 1 139 423 (2x) VA: lowering (expertise): 20 mm; axle load to: 990 kg HA: lowering (expertise): 10 mm; axle load to: 1170 kg
B12 PK	**320 Cd, 320 Ci, 323 Ci, 325 Ci, 330 Ci** 06/00 - 110 -170 kW	**46-180018**		Conditions see certificates VA: lowering (expertise): 40 mm; axle load to: 970 kg HA: without ride height adjustment; lowering (expertise): 20-25 mm; axle load to: 1190 kg
B12 PK	**330 Cd** 08/05 - 150 kW	**46-180025**		Conditions see certificates VA: lowering (expertise): 30 mm; axle load to: 1030 kg HA: without ride height adjustment; lowering (expertise): 20-25 mm; axle load to: 1190 kg
B14	**318 Ci, 320 Cd, 320 Ci, 323 Ci, 325 Ci, 330 Cd, 330 Ci** 06/00 - 105 -170 kW	**47-126848**		Conditions see certificates VA: lowering (expertise): 35-50 mm; axle load to: 1030 kg HA: lowering (expertise): 25-40 mm; axle load to: 1190 kg
B16 PSS10	**318 Ci, 320 Cd, 320 Ci, 323 Ci, 325 Ci, 330 Cd, 330 Ci** 06/00 - 105 -170 kW	**48-126380**		Conditions see certificates VA: lowering (expertise): 35-50 mm; axle load to: 1030 kg HA: lowering (expertise): 25-40 mm; axle load to: 1190 kg
B16 PSS10	**M3 3.2** 04/01 - 252 kW	**48-126687**		Conditions see certificates; Only in connection with 31 32 1 139 423 (2x) VA: lowering (expertise): 15-35 mm; axle load to: 990 kg HA: lowering (expertise): 20-35 mm; axle load to: 1170 kg
B16 RC	**318 Ci, 320 Cd, 320 Ci, 323 Ci, 325 Ci, 330 Cd, 330 Ci** 06/00 - 105 -170 kW	**49-135121**		Conditions see certificates VA: lowering (expertise): 35-50 mm; axle load to: 1030 kg HA: lowering (expertise): 25-40 mm; axle load to: 1190 kg
MS	**318 Ci, 320 Cd, 320 Ci, 323 Ci, 325 Ci, 330 Cd, 330 Ci, M3 3.2** 04/01 - 105 -252 kW	*31-633499* ↰ *31-633505* ↱	*26-602059*	mark: VLN VA: Mechanically adjustable shock strength; Height Adjustable HA: Mechanically adjustable shock strength
BMW 3 Touring (E46)				
B1	**316 i, 318 d, 318 i, 320 d, 320 i, 325 i, 325 xi, 328 i, 330 d, 330 i, 330 xd, 330 xi** 06/00 - 02/05 85 -170 kW	**12-117260**	**12-117109**	VA: with ball bearing HA: with gasket
B3	**316 i, 318 i** 09/01 - 02/05 85 -105 kW	**36-129249**	**38-129223**	with standard chassis
B3	**316 i, 318 i** 09/01 - 02/05 85 -105 kW	**36-129256**	**38-129230**	with standard chassis; Heavy Duty Version .
B3	**320 i** 10/99 - 02/05 110 -125 kW	**36-129256**	**38-129223**	with standard chassis
B3	**320 i** 10/99 - 02/05 110 -125 kW	**36-133208**	**38-129230**	with standard chassis; Heavy Duty Version .
B3	**325 xi, 330 xd, 330 xi** 06/00 - 02/05 135 -170 kW	**36-164295**	**38-129230**	with standard chassis
B3	**318 d, 320 d, 325 i, 328 i** 10/99 - 02/05 85 -142 kW	**36-129256**	**38-129230**	with standard chassis
B3	**318 d, 320 d, 325 i, 328 i, 330 d, 330 i** 06/00 - 02/05 85 -170 kW	**36-164295**		with standard chassis; Heavy Duty Version .
B3	**330 d, 330 i** 10/99 - 02/05 135 -170 kW	**36-133208**	**38-129230**	with standard chassis
B4	**316 i, 318 d, 318 i** 09/01 - 02/05 85 -105 kW	**22-103130** ↰ **22-103147** ↱	**19-103112** **11-181415** SP	with standard chassis

BMW

BMW 3 Touring (E46)

B4	**316 i, 318 d, 318 i, 320 d, 320 i, 325 i, 328 i, 330 d, 330 i** 06/00 - 02/05 85 -170 kW	**22-139931** ↰ **22-139948** ↱	**19-103112** **11-181415** SP	with M-technics
B4	**320 d, 320 i, 325 i, 328 i, 330 d, 330 i** 10/99 - 02/05 100 -170 kW	**22-103093** ↰ **22-103109** ↱	**19-103112** **11-181415** SP	with standard chassis
B6 Sport	**316 i, 318 d, 318 i, 320 d, 320 i, 325 i, 328 i, 330 d, 330 i** 06/00 - 02/05 85 -170 kW	**35-115045** ↰ **35-115052** ↱	**24-026970** **11-181415** SP	with standard chassis VA: mono-tube
B6 Sport	**316 i, 318 d, 318 i, 320 d, 320 i, 325 i, 328 i, 330 d, 330 i** 06/00 - 02/05 85 -170 kW	*22-043344* ↰ *22-043351* ↱	**24-026970** **11-181415** SP	with standard chassis VA: serie production spring seat must be used; twin-tube
B6 Sport	**325 xi, 330 xd, 330 xi** 06/00 - 02/05 135 -170 kW	**22-052810** ↰ **22-052827** ↱	**24-068659** **11-181415** SP	with standard chassis VA: serie production spring seat must be used
B6 a10	**316 i, 318 d, 318 i, 320 d, 320 i, 325 i, 328 i, 330 d, 330 i** 06/00 - 02/05 85 -170 kW	**31-181884** ↰ **31-181891** ↱	**26-181905**	with standard chassis; with M-technics
B8	**316 i, 318 d, 318 i, 320 d, 320 i, 325 i, 328 i, 330 d, 330 i** 06/00 - 02/05 85 -170 kW	*22-053039* ↰ *22-053046* ↱	**24-026987** **11-181415** SP	with M-technics; without ride height adjustment VA: serie production spring seat must be used; twin-tube
B8	**316 i, 318 d, 318 i, 320 d, 320 i, 325 i, 328 i, 330 d, 330 i** 06/00 - 02/05 85 -170 kW	**35-115069** ↰ **35-115076** ↱	**24-026987** **11-181415** SP	with M-technics; without ride height adjustment
B8	**316 i, 318 d, 318 i, 320 d, 320 i, 325 i, 328 i, 330 d, 330 i** 06/00 - 02/05 85 -170 kW	**35-115106** ↰ **35-115113** ↱	**24-026987** **11-181415** SP	with M-technics; with lowered chassis; without ride height adjustment VA: rebound: 45 mm
B8	**325 xi, 330 xd, 330 xi** 06/00 - 02/05 135 -170 kW	**22-052834** ↰ **22-052841** ↱	**24-068666** **11-181415** SP	with M-technics VA: serie production spring seat must be used
B12 PK	**316 i, 318 i** 09/01 - 02/05 85 -105 kW	**46-180001**		Conditions see certificates VA: lowering (expertise): 30 mm; axle load to: 895 kg HA: without ride height adjustment; lowering (expertise): 20-25 mm; axle load to: 1190 kg
B12 PK	**318 d, 320 d, 320 i, 325 i, 328 i, 330 i** 06/00 - 02/05 85 -170 kW	**46-180018**		Conditions see certificates VA: lowering (expertise): 30 mm; axle load to: 970 kg HA: without ride height adjustment; lowering (expertise): 20-25 mm; axle load to: 1190 kg
B12 PK	**330 d** 10/99 - 02/05 135 -150 kW	**46-180025**		Conditions see certificates VA: lowering (expertise): 30 mm; axle load to: 1030 kg HA: without ride height adjustment; lowering (expertise): 20-25 mm; axle load to: 1190 kg
B12 SL	**316 i, 318 i** 09/01 - 02/05 85 -105 kW	**46-180094**		Conditions see certificates VA: lowering (expertise): 45-50 mm; axle load to: 895 kg HA: without ride height adjustment; lowering (expertise): 30 mm; axle load to: 1190 kg
B12 SL	**318 d, 320 d, 320 i, 325 i, 328 i, 330 i** 06/00 - 02/05 85 -170 kW	**46-180117**		Conditions see certificates VA: lowering (expertise): 45-50 mm; axle load to: 935 kg HA: without ride height adjustment; lowering (expertise): 30 mm; axle load to: 1190 kg
B14	**316 i, 318 d, 318 i, 320 d, 320 i, 325 i, 328 i, 330 d, 330 i** 06/00 - 02/05 85 -170 kW	**47-126848**		Conditions see certificates VA: lowering (expertise): 35-50 mm; axle load to: 1030 kg HA: lowering (expertise): 25-40 mm; axle load to: 1190 kg
B16 PSS10	**316 i, 318 d, 318 i, 320 d, 320 i, 325 i, 328 i, 330 d, 330 i** 06/00 - 02/05 85 -170 kW	**48-126380**		Conditions see certificates VA: lowering (expertise): 35-50 mm; axle load to: 1030 kg HA: lowering (expertise): 25-40 mm; axle load to: 1190 kg
B16 RC	**316 i, 318 d, 318 i, 320 d, 320 i, 325 i, 328 i, 330 d, 330 i** 06/00 - 02/05 85 -170 kW	**49-135121**		Conditions see certificates VA: lowering (expertise): 35-50 mm; axle load to: 1030 kg HA: lowering (expertise): 25-40 mm; axle load to: 1190 kg
MS	**318 d, 318 i, 320 d, 320 i, 325 i, 328 i, 330 d, 330 i** 06/00 - 02/05 85 -170 kW	*31-633499* ↰ *31-633505* ↱	*26-602059*	mark: VLN VA: Mechanically adjustable shock strength; Height Adjustable HA: Mechanically adjustable shock strength

BMW

BMW 3 Touring (E46)

BMW 3 (E90)

B1	**2.5, 3.0, 316d, 316i, 318d, 318i, 320 si, 320d, 320i, 325d, 325i, 330d, 330i, 335d, 335i** 01/05 - 85 -225 kW	**12-117260**	**12-226443** **12-226436**	VA: with ball bearing; without sport chassis; without M-technics
B1	**2.5, 316d, 316i, 318d, 318i, 320 si, 320d, 320i, 325d, 325i, 330d, 330i, 335d, 335i** 01/05 - 85 -225 kW	**12-224432**		VA: with ball bearing; with sports suspension
B1	**M3** 03/07 - 309 kW	**50-174546** SP	**50-174546** SP	with electronic suspension control
B3	**316i, 318i, 320i** 01/05 - 85 -125 kW	*37-148485*	**36-161362**	with standard chassis
B3	**316i, 318i, 320i** 01/05 - 85 -125 kW	**37-148492**	**36-161348**	with standard chassis; Heavy Duty Version .
B3	**2.5** 04/06 - 06/07 130 kW	*37-148485*	**36-161348**	with standard chassis
B3	**2.5** 04/06 - 06/07 130 kW	**37-148492**	**36-161331**	with standard chassis; Heavy Duty Version .
B3	**320 si** 05/06 - 127 kW	*37-148485*	**36-161362**	with standard chassis
B3	**320 si** 05/06 - 127 kW	**37-148492**	**36-161348**	with standard chassis; Heavy Duty Version .
B3	**325i** 01/05 - 160 kW	**37-148508**	**36-161331**	with standard chassis; Heavy Duty Version .
B3	**3.0, 330i** 01/05 - 187 -200 kW	**37-148508**	**36-161348**	with standard chassis
B3	**3.0, 330i** 01/05 - 187 -200 kW	**37-160531**	**36-161331**	with standard chassis; Heavy Duty Version .
B3	**3.0, 335i** 09/06 - 220 -225 kW	**37-160531**	**36-161348**	with standard chassis
B3	**3.0, 335i** 09/06 - 220 -225 kW	**37-159801**	**36-161331**	with standard chassis; Heavy Duty Version .
B3	**316d, 318d, 320d, 325i** 09/07 - 85 -160 kW	**37-148492**	**36-161348**	with standard chassis
B3	**316d, 318d, 320d** 09/07 - 85 -135 kW	**37-160531**	**36-161324**	with standard chassis; Heavy Duty Version .
B3	**325d, 330d** 09/05 - 145 -170 kW	**37-160531**	**36-161331**	with standard chassis
B3	**325d, 330d** 09/05 - 145 -170 kW	**37-159801**	**36-161324**	with standard chassis; Heavy Duty Version .
B3	**330d, 335d** 09/06 - 180 -210 kW	**37-159801**	**36-161331**	with standard chassis
B3	**330d, 335d** 09/06 - 180 -210 kW	**37-161255**	**36-161324**	with standard chassis; Heavy Duty Version .
B4	**2.5, 3.0, 316d, 316i, 318d, 318i, 320 si, 320d, 320i, 325d, 325i, 330d, 330i, 335d, 335i** 01/05 - 85 -225 kW	**22-135001** **22-135018**	**19-135021**	with standard chassis

BMW

BMW 3 (E90)

B4	**2.5, 3.0, 316d, 316i, 318d, 318i, 320 si, 320d, 320i, 325d, 325i, 330d, 330i, 335d, 335i** 01/05 - 85 -225 kW	**22-135032** **22-135049**	**19-135052**	with sports suspension
B4	**320d xDrive, 320xd, 325i xDrive, 325xi, 330d xDrive, 330i xDrive, 330xd, 330xi, 335i xDrive, 335xi** 09/07 - 120 -225 kW	**i.V.** **i.V.**	**19-135021**	with standard chassis
B6 Sport	**2.5, 3.0, 316d, 316i, 318d, 318i, 320 si, 320d, 320i, 325d, 325i, 330d, 330i, 335d, 335i** 01/05 - 85 -225 kW	**35-120377** **35-120384**	**24-120395**	with standard chassis
B6 Sport	**M3** 03/07 - 309 kW	**35-143321** **35-143338**	**24-143349**	without electronic suspension control; without EDC
B6 Sport	**M3** 03/07 - 309 kW	**35-143321** **35-143338**	**24-143349**	with electronic suspension control; with EDC; Only in connection with 50-174546
B6 Sport	**320d xDrive, 320xd, 325i xDrive, 325xi, 330d xDrive, 330i xDrive, 330xd, 330xi, 335i xDrive, 335xi** 09/07 - 120 -225 kW	**35-142454** **35-142461**	**24-120395**	
B6 DTC	**M3** 03/07 - 309 kW	**31-224550** **31-224567**	**26-224572**	with electronic suspension control; with EDC
B6 a10	**2.5, 3.0, 316d, 316i, 318d, 318i, 320 si, 320d, 320i, 325d, 325i, 330d, 330i, 335d, 335i** 01/05 - 85 -225 kW	**31-181914** **31-181921**	**26-181936**	with standard chassis; with M-technics
B8	**2.5, 3.0, 316d, 316i, 318d, 318i, 320 si, 320d, 320i, 325d, 325i, 330d, 330i, 335d, 335i** 01/05 - 85 -225 kW	**35-120407** **35-120414**	**24-120425**	with M-technics
B8	**M3** 03/07 - 309 kW	**35-143291** **35-143307**	**24-143318**	without electronic suspension control; without EDC
B8	**M3** 03/07 - 309 kW	**35-143291** **35-143307**	**24-143318**	with electronic suspension control; with EDC; Only in connection with 50-174546
B8	**320d xDrive, 320xd, 325i xDrive, 325xi, 330d xDrive, 330i xDrive, 330xd, 330xi, 335i xDrive, 335xi** 09/07 - 120 -225 kW	**35-142478** **35-142485**	**24-120425**	
B12 PK	**318i, 320 si, 320i** 01/05 - 95 -127 kW	**46-180544**		Conditions see certificates VA: lowering (expertise): 30 mm; axle load to: 935 kg HA: without ride height adjustment; lowering (expertise): 25 mm; axle load to: 1085 kg
B12 PK	**2.5, 3.0, 316d, 318d, 320d, 325i, 330i** 01/05 - 85 -200 kW	**46-180551**		Conditions see certificates VA: lowering (expertise): 30 mm; axle load to: 1045 kg HA: without ride height adjustment; lowering (expertise): 25 mm; axle load to: 1135 kg
B12 PK	**3.0, 325d, 330d, 335d, 335i** 09/06 - 145 -225 kW	**46-180568**		Conditions see certificates VA: lowering (expertise): 30 mm; axle load to: 1090 kg HA: without ride height adjustment; lowering (expertise): 25 mm; axle load to: 1135 kg
B12 PK	**M3** 03/07 - 309 kW	**46-180698**		without electronic suspension control; without EDC; Conditions see certificates VA: lowering (expertise): 20 mm; axle load to: 1060 kg HA: without ride height adjustment; lowering (expertise): 15 mm; axle load to: 1190 kg
B12 PK	**M3** 03/07 - 309 kW	**46-180698**		with electronic suspension control; with EDC; Conditions see certificates; Only in connection with 50-174546 VA: lowering (expertise): 20 mm; axle load to: 1060 kg HA: without ride height adjustment; lowering (expertise): 15 mm; axle load to: 1190 kg

BMW

BMW 3 (E90)

B12 PK	**320d xDrive, 320xd, 325i xDrive, 325xi, 330i xDrive, 330xi** 09/07 - 120 -200 kW	**46-180605**		Conditions see certificates VA: lowering (expertise): 30 mm; axle load to: 1045 kg HA: without ride height adjustment; lowering (expertise): 15-20 mm; axle load to: 1200 kg
B12 PK	**330d xDrive, 330xd** 09/05 - 170 -180 kW	**46-180612**		Conditions see certificates VA: lowering (expertise): 30 mm; axle load to: 1090 kg HA: without ride height adjustment; lowering (expertise): 15-20 mm; axle load to: 1200 kg
B12 SL	**318i, 320 si, 320i** 01/05 - 95 -127 kW	**46-180711**		Conditions see certificates VA: lowering (expertise): 45-50 mm; axle load to: 935 kg HA: without ride height adjustment; lowering (expertise): 35 mm; axle load to: 1085 kg
B12 SL	**2.5, 3.0, 316d, 318d, 320d, 325i, 330i** 01/05 - 85 -200 kW	**46-180728**		Conditions see certificates VA: lowering (expertise): 45-50 mm; axle load to: 955 kg HA: without ride height adjustment; lowering (expertise): 35 mm; axle load to: 1135 kg
B14	**2.5, 3.0, 316d, 316i, 318d, 318i, 320 si, 320d, 320i, 325d, 325i, 330d, 330i, 335d, 335i** 01/05 - 85 -225 kW	**47-120471**		Conditions see certificates VA: lowering (expertise): 30-50 mm; axle load to: 1020 kg HA: lowering (expertise): 30-50 mm; axle load to: 1200 kg
B16 PSS10	**2.5, 3.0, 316d, 316i, 318d, 318i, 320 si, 320d, 320i, 325d, 325i, 330d, 330i, 335d, 335i** 01/05 - 85 -225 kW	**48-131636**		Conditions see certificates VA: lowering (expertise): 30-50 mm; axle load to: 1020 kg HA: lowering (expertise): 30-50 mm; axle load to: 1200 kg
B16 PSS10	**2.5, 3.0, 316d, 316i, 318d, 318i, 320 si, 320d, 320i, 325d, 325i, 330d, 330i, 335d, 335i** 01/05 - 85 -225 kW	**48-195232**		Conditions see certificates VA: lowering (expertise): 20-40 mm; axle load to: 1020 kg HA: lowering (expertise): 20-40 mm; axle load to: 1200 kg
B16 PSS10	**M3** 03/07 - 309 kW	**48-145701**		without electronic suspension control; without EDC; Conditions see certificates VA: lowering (expertise): 10-35 mm; axle load to: 1060 kg HA: lowering (expertise): 20-35 mm; axle load to: 1270 kg
B16 PSS10	**M3** 03/07 - 309 kW	**48-145701**		with electronic suspension control; with EDC; Conditions see certificates; Only in connection with 50-174546 VA: lowering (expertise): 10-35 mm; axle load to: 1060 kg HA: lowering (expertise): 20-35 mm; axle load to: 1270 kg
B16 RC	**2.5, 3.0, 316d, 316i, 318d, 318i, 320 si, 320d, 320i, 325d, 325i, 330d, 330i, 335d, 335i** 01/05 - 85 -225 kW	**49-131543**		Conditions see certificates VA: lowering (expertise): 30-50 mm; axle load to: 1020 kg HA: lowering (expertise): 30-50 mm; axle load to: 1200 kg
B16 BCS	**M3** 03/07 - 309 kW	**48-223539**		without electronic suspension control; without EDC; Conditions see certificates
MS	**2.5, 3.0, 316d, 316i, 318d, 318i, 320 si, 320d, 320i, 325d, 325i, 330d, 330i, 335d, 335i** 01/05 - 85 -225 kW	*31-633499* *31-633505*	*26-633510*	mark: VLN VA: Mechanically adjustable shock strength; Height Adjustable HA: Mechanically adjustable shock strength

BMW 3 Touring (E91)

B1	**2.5, 316d, 316i, 318d, 318i, 320d, 320i, 325d, 325i, 330d, 330i, 335d, 335i** 09/05 - 85 -225 kW	**12-117260**	**12-226443** **12-226436**	VA: with ball bearing; without sport chassis; without M-technics
B1	**2.5, 316d, 316i, 318d, 318i, 320d, 320i, 325d, 325i, 330d, 330i, 335d, 335i** 09/05 - 85 -225 kW	**12-224432**	**12-226443** **12-226436**	VA: with ball bearing; with sports suspension
B3	**316i, 318i, 320i, 330d** 09/05 - 90 -180 kW	*37-148485*	**36-160228**	with standard chassis
B3	**316i, 318i, 320i, 330d** 09/05 - 90 -180 kW	**37-148492**	**36-160204**	with standard chassis; Heavy Duty Version .
B3	**2.5** 04/06 - 06/07 130 kW	**37-148492**	**36-160228**	with standard chassis

BMW

BMW 3 Touring (E91)

B3	**2.5** 04/06 - 06/07 130 kW	**37-148508**	**36-160204**	with standard chassis; Heavy Duty Version .
B3	**316d, 318d, 320d, 325i, 330i** 09/07 - 85 -200 kW	**37-148508**	**36-160204**	with standard chassis
B3	**316d, 318d, 320d, 325i, 330i** 09/07 - 85 -200 kW	**37-160531**		with standard chassis; Heavy Duty Version .
B3	**325d, 335i** 09/06 - 145 -225 kW	**37-159801**	**36-160204**	with standard chassis
B3	**325d, 335i** 09/06 - 145 -225 kW	**37-161255**		with standard chassis; Heavy Duty Version .
B3	**330d** 09/05 - 170 kW	**37-160531**	**36-160204**	with standard chassis
B3	**330d** 09/05 - 170 kW	**37-159801**		with standard chassis; Heavy Duty Version .
B3	**335d** 09/06 - 210 kW	**37-161255**	**36-160204**	with standard chassis
B4	**2.5, 316d, 316i, 318d, 318i, 320d, 320i, 325d, 325i, 330d, 330i, 335d, 335i** 09/05 - 85 -225 kW	**22-135001** **22-135018**	**19-135021**	with standard chassis
B4	**2.5, 316d, 316i, 318d, 318i, 320d, 320i, 325d, 325i, 330d, 330i, 335d, 335i** 09/05 - 85 -225 kW	**22-135032** **22-135049**	**19-135052**	with sports suspension
B4	**2.0 320d xDrive, 320d xDrive, 320xd, 325i xDrive, 325xi, 330i xDrive, 330xd, 330xi, 335i xDrive, 335xi** 09/07 - 120 -225 kW	**i.V.** **i.V.**	**19-135021**	with standard chassis
B6 Sport	**2.5, 316d, 316i, 318d, 318i, 320d, 320i, 325d, 325i, 330d, 330i, 335d, 335i** 09/05 - 85 -225 kW	**35-120377** **35-120384**	**24-120395**	with standard chassis
B6 Sport	**2.0 320d xDrive, 320d xDrive, 320xd, 325i xDrive, 325xi, 330i xDrive, 330xd, 330xi, 335i xDrive, 335xi** 09/07 - 120 -225 kW	**35-142454** **35-142461**	**24-120395**	
B6 a10	**2.5, 316d, 316i, 318d, 318i, 320d, 320i, 325d, 325i, 330d, 330i, 335d, 335i** 09/05 - 85 -225 kW	**31-181914** **31-181921**	**26-181936**	
B8	**2.5, 316d, 316i, 318d, 318i, 320d, 320i, 325d, 325i, 330d, 330i, 335d, 335i** 09/05 - 85 -225 kW	**35-120407** **35-120414**	**24-120425**	with M-technics
B8	**2.0 320d xDrive, 320d xDrive, 320xd, 325i xDrive, 325xi, 330i xDrive, 330xd, 330xi, 335i xDrive, 335xi** 09/07 - 120 -225 kW	**35-142478** **35-142485**	**24-120425**	
B12 PK	**316i, 318i, 320i** 09/05 - 90 -125 kW	**46-180575**		Conditions see certificates VA: lowering (expertise): 30 mm; axle load to: 935 kg HA: without ride height adjustment; lowering (expertise): 25 mm; axle load to: 1135 kg
B12 PK	**2.5, 316d, 318d, 320d, 325i, 330i** 09/05 - 85 -200 kW	**46-180582**		Conditions see certificates VA: lowering (expertise): 30 mm; axle load to: 1045 kg HA: without ride height adjustment; lowering (expertise): 25 mm; axle load to: 1200 kg
B12 PK	**2.0 320d xDrive, 320d xDrive, 320xd, 325i xDrive, 325xi, 330i xDrive, 330xi** 09/07 - 120 -200 kW	**46-180629**		Conditions see certificates VA: lowering (expertise): 30 mm; axle load to: 1045 kg HA: without ride height adjustment; lowering (expertise): 25 mm; axle load to: 1200 kg

BMW

BMW 3 Touring (E91)

B12 PK	**325d, 330d, 335d, 335i** 09/05 - 145 -225 kW	**46-180599**		Conditions see certificates VA: lowering (expertise): 30 mm; axle load to: 1090 kg HA: without ride height adjustment; lowering (expertise): 25 mm; axle load to: 1200 kg
B12 PK	**330xd, 335i xDrive, 335xi** 09/05 - 170 -225 kW	**46-180636**		Conditions see certificates VA: lowering (expertise): 30 mm; axle load to: 1090 kg HA: without ride height adjustment; lowering (expertise): 25 mm; axle load to: 1200 kg
B12 SL	**316i, 318i, 320i** 09/05 - 90 -125 kW	**46-180735**		Conditions see certificates VA: lowering (expertise): 45-50 mm; axle load to: 935 kg HA: without ride height adjustment; lowering (expertise): 35 mm; axle load to: 1135 kg
B12 SL	**2.5, 316d, 318d, 320d, 325i, 330i, 335i** 09/05 - 85 -225 kW	**46-180742**		Conditions see certificates VA: lowering (expertise): 45-50 mm; axle load to: 955 kg HA: without ride height adjustment; lowering (expertise): 35 mm; axle load to: 1175 kg
B14	**2.5, 316d, 316i, 318d, 318i, 320d, 320i, 325d, 325i, 330d, 330i, 335d, 335i** 09/05 - 85 -225 kW	**47-120471**		Conditions see certificates VA: lowering (expertise): 30-50 mm; axle load to: 1020 kg HA: lowering (expertise): 30-50 mm; axle load to: 1200 kg
B16 PSS10	**2.5, 316d, 316i, 318d, 318i, 320d, 320i, 325d, 325i, 330d, 330i, 335d, 335i** 09/05 - 85 -225 kW	**48-131636**		Conditions see certificates VA: lowering (expertise): 30-50 mm; axle load to: 1020 kg HA: lowering (expertise): 30-50 mm; axle load to: 1200 kg
B16 PSS10	**2.5, 316d, 316i, 318d, 318i, 320d, 320i, 325d, 325i, 330d, 330i, 335d, 335i** 09/05 - 85 -225 kW	**48-195232**		Conditions see certificates VA: lowering (expertise): 20-40 mm; axle load to: 1020 kg HA: lowering (expertise): 20-40 mm; axle load to: 1200 kg
B16 RC	**2.5, 316d, 316i, 318d, 318i, 320d, 320i, 325d, 325i, 330d, 330i, 335d, 335i** 09/05 - 85 -225 kW	**49-131543**		Conditions see certificates VA: lowering (expertise): 30-50 mm; axle load to: 1020 kg HA: lowering (expertise): 30-50 mm; axle load to: 1200 kg
MS	**2.5, 316d, 316i, 318d, 318i, 320d, 320i, 325d, 325i, 330d, 330i, 335d, 335i** 09/05 - 85 -225 kW	*31-633499* *31-633505*	*26-633510*	mark: VLN VA: Mechanically adjustable shock strength; Height Adjustable HA: Mechanically adjustable shock strength

BMW 3 Coupe (E92)

B1	**2.0, 2.5, 3.0, 318i, 320d, 320i, 325d, 325i, 325xi, 330d, 330i, 335d, 335i** 09/06 - 105 -225 kW	**12-224432**	**12-226443** **12-226436**	VA: with ball bearing
B3	**2.0, 318i, 320i** 11/06 - 105 -125 kW	*37-148485*	**36-161317**	with standard chassis
B3	**2.0, 318i, 320i** 11/06 - 105 -125 kW	**37-148492**	**36-161386**	with standard chassis; Heavy Duty Version .
B3	**2.5** 06/06 - 130 kW	**37-148492**	**36-161317**	with standard chassis
B3	**2.5** 06/06 - 130 kW	**37-148508**	**36-161386**	with standard chassis; Heavy Duty Version .
B3	**3.0, 320d, 325i, 330i** 08/06 - 130 -200 kW	**37-148492**	**36-161386**	with standard chassis
B3	**3.0, 320d, 325i, 330i** 08/06 - 130 -200 kW	**37-148508**	**36-161362**	with standard chassis; Heavy Duty Version .
B3	**325d, 330d** 09/06 - 145 -180 kW	**37-160531**	**36-161362**	with standard chassis
B3	**325d, 330d** 09/06 - 145 -180 kW	**37-159801**	**36-161348**	with standard chassis; Heavy Duty Version .
B4	**2.0, 2.5, 3.0, 318i, 320d, 320i, 325d, 325i, 330d, 330i, 335d, 335i** 09/06 - 105 -225 kW	**22-136572** **22-136589**	**19-136592**	with standard chassis

BMW

BMW 3 Coupe (E92)

B4	**2.0, 2.5, 3.0, 318i, 320d, 320i, 325d, 325i, 330d, 330i, 335d, 335i** 09/06 - 105 -225 kW	**22-136602** ↰ **22-136619** ↱	**19-136622**	with sports suspension
B4	**320d xDrive, 320xd, 325i xDrive, 325xi, 330d xDrive, 330i xDrive, 330xd, 330xi, 335i xDrive, 335xi** 09/06 - 130 -225 kW	i.V. ↰ i.V. ↱	**19-135021**	with standard chassis
B6 Sport	**2.0, 2.5, 3.0, 318i, 320d, 320i, 325d, 325i, 330d, 330i, 335d, 335i** 09/06 - 105 -225 kW	**35-120377** ↰ **35-120384** ↱	**24-120395**	with standard chassis
B6 Sport	**M3** 03/07 - 309 kW	**35-143321** ↰ **35-143338** ↱	**24-143349**	without electronic suspension control; without EDC
B6 Sport	**M3** 03/07 - 309 kW	**35-143321** ↰ **35-143338** ↱	**24-143349**	with electronic suspension control; with EDC; Only in connection with 50-174546
B6 Sport	**320d xDrive, 320xd, 325i xDrive, 325xi, 330d xDrive, 330i xDrive, 330xd, 330xi, 335i xDrive, 335xi** 09/06 - 130 -225 kW	**35-142454** ↰ **35-142461** ↱	**24-120395**	
B6 DTC	**M3** 03/07 - 309 kW	**31-224550** ↰ **31-224567** ↱	**26-224572**	with electronic suspension control; with EDC
B6 a10	**2.0, 2.5, 3.0, 318i, 320d, 320i, 325d, 325i, 330d, 330i, 335d, 335i** 09/06 - 105 -225 kW	**31-181914** ↰ **31-181921** ↱	**26-181936**	with standard chassis; with M-technics
B8	**2.0, 2.5, 3.0, 318i, 320d, 320i, 325d, 325i, 330d, 330i, 335d, 335i** 09/06 - 105 -225 kW	**35-120407** ↰ **35-120414** ↱	**24-120425**	with M-technics
B8	**M3** 03/07 - 309 kW	**35-143291** ↰ **35-143307** ↱	**24-143318**	without electronic suspension control; without EDC
B8	**M3** 03/07 - 309 kW	**35-143291** ↰ **35-143307** ↱	**24-143318**	with electronic suspension control; with EDC; Only in connection with 50-174546
B8	**320d xDrive, 320xd, 325i xDrive, 325xi, 330d xDrive, 330i xDrive, 330xd, 330xi, 335i xDrive, 335xi** 09/06 - 130 -225 kW	**35-142478** ↰ **35-142485** ↱	**24-120425**	
B12 PK	**2.0, 2.5, 3.0, 318i, 320d, 320i, 325i, 330i** 09/06 - 105 -200 kW	**46-180643**		Conditions see certificates VA: lowering (expertise): 35 mm; axle load to: 930 kg HA: without ride height adjustment; lowering (expertise): 25 mm; axle load to: 1090 kg
B12 PK	**M3** 03/07 - 309 kW	**46-180698**		without electronic suspension control; without EDC; Conditions see certificates VA: lowering (expertise): 20 mm; axle load to: 1060 kg HA: without ride height adjustment; lowering (expertise): 15 mm; axle load to: 1190 kg
B12 PK	**M3** 03/07 - 309 kW	**46-180698**		with electronic suspension control; with EDC; Conditions see certificates; Only in connection with 50-174546 VA: lowering (expertise): 20 mm; axle load to: 1060 kg HA: without ride height adjustment; lowering (expertise): 15 mm; axle load to: 1190 kg
B12 PK	**325d, 330d, 335d, 335i** 09/06 - 145 -225 kW	**46-180650**		Conditions see certificates VA: lowering (expertise): 35 mm; axle load to: 990 kg HA: without ride height adjustment; lowering (expertise): 25 mm; axle load to: 1090 kg
B14	**2.0, 2.5, 3.0, 318i, 320d, 320i, 325d, 325i, 330d, 330i, 335d, 335i** 09/06 - 105 -225 kW	**47-120471**		Conditions see certificates VA: lowering (expertise): 30-50 mm; axle load to: 1020 kg HA: lowering (expertise): 30-50 mm; axle load to: 1200 kg
B16 PSS10	**2.0, 2.5, 3.0, 318i, 320d, 320i, 325d, 325i, 330d, 330i, 335d, 335i** 09/06 - 105 -225 kW	**48-131636**		Conditions see certificates VA: lowering (expertise): 30-50 mm; axle load to: 1020 kg HA: lowering (expertise): 30-50 mm; axle load to: 1200 kg

BMW

BMW 3 Coupe (E92)

B16 PSS10	**2.0, 2.5, 3.0, 318i, 320d, 320i, 325d, 325i, 330d, 330i, 335d, 335i** 09/06 - 105 -225 kW	**48-195232**		Conditions see certificates VA: lowering (expertise): 20-40 mm; axle load to: 1020 kg HA: lowering (expertise): 20-40 mm; axle load to: 1200 kg
B16 PSS10	**M3** 03/07 - 309 kW	**48-145701**		without electronic suspension control; without EDC; Conditions see certificates VA: lowering (expertise): 10-35 mm; axle load to: 1060 kg HA: lowering (expertise): 20-35 mm; axle load to: 1270 kg
B16 PSS10	**M3** 03/07 - 309 kW	**48-145701**		with electronic suspension control; with EDC; Conditions see certificates; Only in connection with 50-174546 VA: lowering (expertise): 10-35 mm; axle load to: 1060 kg HA: lowering (expertise): 20-35 mm; axle load to: 1270 kg
B16 RC	**2.0, 2.5, 3.0, 318i, 320d, 320i, 325d, 325i, 330d, 330i, 335d, 335i** 09/06 - 105 -225 kW	**49-131543**		Conditions see certificates VA: lowering (expertise): 30-50 mm; axle load to: 1020 kg HA: lowering (expertise): 30-50 mm; axle load to: 1200 kg
B16 BCS	**M3** 03/07 - 309 kW	**48-223539**		without electronic suspension control; without EDC; Conditions see certificates
B16 BCS	**M3** 03/07 - 309 kW	**48-223539**		with electronic suspension control; with EDC; Conditions see certificates; Only in connection with 50-174546
MS	**2.0, 2.5, 3.0, 318i, 320d, 320i, 325d, 325i, 330d, 330i, 335d, 335i** 09/06 - 105 -225 kW	*31-633499* *31-633505*	*26-633510*	mark: VLN VA: Mechanically adjustable shock strength; Height Adjustable HA: Mechanically adjustable shock strength

BMW 3 Convertible (E93)

B1	**1.9, 2.5, 3.0, 318i, 320d, 320i, 325d, 325i, 330d, 330i, 335i** 03/07 - 105 -225 kW	**12-224432**	**12-226443** **12-226436**	VA: with ball bearing
B3	**1.9, 318i, 320i** 03/07 - 105 -125 kW	**37-148492**	**36-161324**	with standard chassis
B3	**1.9, 318i, 320i** 03/07 - 105 -125 kW	**37-148508**	**36-160419**	with standard chassis; Heavy Duty Version .
B3	**2.5, 3.0, 320d, 325i, 330i** 03/07 - 130 -200 kW	**37-160531**	**36-160419**	with standard chassis
B3	**2.5, 3.0, 320d, 325i, 330i** 03/07 - 130 -200 kW	**37-159801**	**36-160235**	with standard chassis; Heavy Duty Version .
B3	**335i** 03/07 - 225 kW	**37-159801**	**36-160235**	with standard chassis
B3	**335i** 03/07 - 225 kW	**37-161255**		with standard chassis; Heavy Duty Version .
B3	**330d** 03/07 - 170 -180 kW	**37-161255**	**36-160235**	with standard chassis
B4	**1.9, 2.5, 3.0, 318i, 320d, 320i, 325d, 325i, 330d, 330i, 335i** 03/07 - 105 -225 kW	**22-145246** **22-145253**	**19-145266**	with standard chassis
B4	**1.9, 2.5, 3.0, 318i, 320d, 320i, 325d, 325i, 330d, 330i, 335i** 03/07 - 105 -225 kW	**22-145277** **22-145284**	*19-145297*	with sports suspension
B6 Sport	**1.9, 2.5, 3.0, 318i, 320d, 320i, 325d, 325i, 330d, 330i, 335i** 03/07 - 105 -225 kW	**35-120377** **35-120384**	**24-120395**	with standard chassis
B6 Sport	**M3** 03/07 - 309 kW	**35-143321** **35-143338**	**24-143349**	without electronic suspension control; without EDC
B6 Sport	**M3** 03/07 - 309 kW	**35-143321** **35-143338**	**24-143349**	with electronic suspension control; with EDC; Only in connection with 50-174546

BMW

BMW 3 Convertible (E93)

B6 DTC	**M3** 03/07 - 309 kW	31-224550 ↰ 31-224567 ↱	26-224572	with electronic suspension control; with EDC
B6 a10	**1.9, 2.5, 3.0, 318i, 320d, 320i, 325d, 325i, 330d, 330i, 335i** 03/07 - 105 -225 kW	**31-181914** ↰ **31-181921** ↱	**26-181936**	with standard chassis; with M-technics
B8	**1.9, 2.5, 3.0, 318i, 320d, 320i, 325d, 325i, 330d, 330i, 335i** 03/07 - 105 -225 kW	**35-120407** ↰ **35-120414** ↱	**24-120425**	with M-technics
B8	**M3** 03/07 - 309 kW	**35-143291** ↰ **35-143307** ↱	**24-143318**	without electronic suspension control; without EDC
B8	**M3** 03/07 - 309 kW	**35-143291** ↰ **35-143307** ↱	**24-143318**	with electronic suspension control; with EDC; Only in connection with 50-174546
B12 PK	**1.9, 318i, 320d, 320i** 03/07 - 105 -135 kW	**46-180667**		Conditions see certificates VA: lowering (expertise): 30 mm; axle load to: 930 kg HA: without ride height adjustment; lowering (expertise): 10-15 mm; axle load to: 1200 kg
B12 PK	**2.5, 3.0, 325i, 330i, 335i** 03/07 - 130 -225 kW	**46-180674**		Conditions see certificates VA: lowering (expertise): 30 mm; axle load to: 990 kg HA: without ride height adjustment; lowering (expertise): 10-15 mm; axle load to: 1200 kg
B12 PK	**M3** 03/07 - 309 kW	**46-180704**		without electronic suspension control; without EDC; Conditions see certificates VA: lowering (expertise): 25 mm; axle load to: 1060 kg HA: without ride height adjustment; lowering (expertise): 15 mm; axle load to: 1270 kg
B12 PK	**M3** 03/07 - 309 kW	**46-180704**		with electronic suspension control; with EDC; Conditions see certificates; Only in connection with 50-174546 VA: lowering (expertise): 25 mm; axle load to: 1060 kg HA: without ride height adjustment; lowering (expertise): 15 mm; axle load to: 1270 kg
B12 PK	**325d, 330d** 03/07 - 145 -180 kW	**46-180681**		Conditions see certificates VA: lowering (expertise): 30 mm; axle load to: 1085 kg HA: without ride height adjustment; lowering (expertise): 10-15 mm; axle load to: 1200 kg
B14	**1.9, 2.5, 3.0, 318i, 320d, 320i, 325d, 325i, 330d, 330i, 335i** 03/07 - 105 -225 kW	**47-120471**		Conditions see certificates VA: lowering (expertise): 30-50 mm; axle load to: 1020 kg HA: lowering (expertise): 30-50 mm; axle load to: 1200 kg
B16 PSS10	**1.9, 2.5, 3.0, 318i, 320d, 320i, 325d, 325i, 330d, 330i, 335i** 03/07 - 105 -225 kW	**48-131636**		Conditions see certificates VA: lowering (expertise): 30-50 mm; axle load to: 1020 kg HA: lowering (expertise): 30-50 mm; axle load to: 1200 kg
B16 PSS10	**1.9, 2.5, 3.0, 318i, 320d, 320i, 325d, 325i, 330d, 330i, 335i** 03/07 - 105 -225 kW	**48-195232**		Conditions see certificates VA: lowering (expertise): 20-40 mm; axle load to: 1020 kg HA: lowering (expertise): 20-40 mm; axle load to: 1200 kg
B16 PSS10	**M3** 03/07 - 309 kW	**48-145701**		without electronic suspension control; without EDC; Conditions see certificates VA: lowering (expertise): 10-35 mm; axle load to: 1060 kg HA: lowering (expertise): 20-35 mm; axle load to: 1270 kg
B16 RC	**1.9, 2.5, 3.0, 318i, 320d, 320i, 325d, 325i, 330d, 330i, 335i** 03/07 - 105 -225 kW	**49-131543**		Conditions see certificates VA: lowering (expertise): 30-50 mm; axle load to: 1020 kg HA: lowering (expertise): 30-50 mm; axle load to: 1200 kg
B16 BCS	**M3** 03/07 - 309 kW	**48-223539**		with electronic suspension control; with EDC; Conditions see certificates; Only in connection with 50-174546
MS	**1.9, 2.5, 3.0, 318i, 320d, 320i, 325d, 325i, 330d, 330i, 335i** 03/07 - 105 -225 kW	*31-633499* ↰ *31-633505* ↱	*26-633510*	mark: VLN VA: Mechanically adjustable shock strength; Height Adjustable HA: Mechanically adjustable shock strength

BMW 3 (F30)

B4	**316d, 318d, 320d, 320i, 328i, 335i** 10/11 - 85 -225 kW	22-220066	i.V.	with standard chassis; without electronic suspension control

BMW				
BMW 3 (F30)				
B4	**316d, 318d, 320d, 320i, 328i, 335i** 10/11 - 85 -225 kW	22-220080	i.V.	with M-technics; with sports suspension; without electronic suspension control
B6 Sport	**316d, 318d, 320d, 320i, 328i, 335i** 10/11 - 85 -225 kW	35-217480	24-217859	with standard chassis; without electronic suspension control
B8	**316d, 318d, 320d, 320i, 328i, 335i** 10/11 - 85 -225 kW	35-217862	24-217873	with M-technics; without electronic suspension control
B12 PK	**335i** 10/11 - 225 kW	46-223678		without electronic suspension control; without ride height adjustment; Conditions see certificates VA: lowering (expertise): 25-30 mm; axle load to: 965 kg HA: lowering (expertise): 25 mm; axle load to: 1145 kg
B12 PK	**335i** 10/11 - 225 kW	46-223678		disconect EDC; with electronic suspension control; without ride height adjustment; Conditions see certificates; Only in connection with 31306792211 VA: lowering (expertise): 25-30 mm; axle load to: 965 kg HA: lowering (expertise): 25 mm; axle load to: 1145 kg
B12 PK	**316d, 318d, 320d, 320i, 328i** 10/11 - 85 -180 kW	46-223661		without electronic suspension control; Conditions see certificates VA: lowering (expertise): 25-30 mm; axle load to: 920 kg HA: lowering (expertise): 25 mm; axle load to: 1145 kg
B12 PK	**316d, 318d, 320d, 320i, 328i** 10/11 - 85 -180 kW	46-223661		disconect EDC; with electronic suspension control; Conditions see certificates; Only in connection with 1x 31306792211 VA: lowering (expertise): 25-30 mm; axle load to: 920 kg HA: lowering (expertise): 25 mm; axle load to: 1145 kg
B14	**316d, 318d, 320d, 320i, 328i, 335i** 10/11 - 85 -225 kW	47-217522		without electronic suspension control; Conditions see certificates VA: lowering (expertise): 30-50 mm HA: lowering (expertise): 30-50 mm
B14	**316d, 318d, 320d, 320i, 328i, 335i** 10/11 - 85 -225 kW	47-217522		disconect EDC; with electronic suspension control; Conditions see certificates; Only in connection with 1x 31306792211 VA: lowering (expertise): 30-50 mm HA: lowering (expertise): 30-50 mm
B16 PSS10	**316d, 318d, 320d, 320i, 328i, 335i** 10/11 - 85 -225 kW	48-217170		without electronic suspension control; Conditions see certificates VA: lowering (expertise): 30-50 mm HA: lowering (expertise): 30-50 mm
B16 PSS10	**316d, 318d, 320d, 320i, 328i, 335i** 10/11 - 85 -225 kW	48-217170		disconect EDC; with electronic suspension control; Conditions see certificates; Only in connection with 1x 31306792211 VA: lowering (expertise): 30-50 mm HA: lowering (expertise): 30-50 mm
B16 RC	**316d, 318d, 320d, 320i, 328i, 335i** 10/11 - 85 -225 kW	49-224658		without electronic suspension control; Conditions see certificates VA: lowering (expertise): 30-50 mm HA: lowering (expertise): 30-50 mm
B16 RC	**316d, 318d, 320d, 320i, 328i, 335i** 10/11 - 85 -225 kW	49-224658		disconect EDC; with electronic suspension control; Conditions see certificates; Only in connection with 1x 31306792211 VA: lowering (expertise): 30-50 mm HA: lowering (expertise): 30-50 mm
BMW 5 (E12)				
B3	**518, 518i, 520, 520 i, 520/6, 525, 528, 528 i** 08/73 - 08/81 66 -135 kW		**36-153930**	with standard chassis
B3	**518, 518i, 520, 520 i** 08/72 - 08/81 66 -96 kW		**36-159765**	with standard chassis; Heavy Duty Version .
B3	**520/6** 09/77 - 01/79 90 kW		**36-159765**	with standard chassis; Heavy Duty Version .
B3	**520/6** 02/79 - 05/81 90 kW	**36-159826**	**36-159765**	with standard chassis; Heavy Duty Version .
B3	**525, 528** 08/73 - 12/78 107 -125 kW	**36-159826**	**36-159765**	with standard chassis; Heavy Duty Version .

BMW

BMW 5 (E12)

B3	**525** 01/79 - 05/81 110 kW		**36-159765**	with standard chassis; Heavy Duty Version .
B3	**528 i** 04/77 - 05/81 130 -135 kW	**36-159826**	**36-159765**	with standard chassis; Heavy Duty Version .
B6 Sport	**518** 07/74 - 08/76 66 -80 kW	**34-000243**	**24-007306**	-> CH.Nr.: 4652701 VA: Øa: 51 mm
B6 Sport	**518** 09/76 - 05/81 66 -80 kW	**34-003268**	**24-007306**	CH.Nr.: 4652702 -> VA: Øa: 48 mm
B6 Sport	**518** CH-Nr. - 08/76 66 -80 kW	**34-000243**	**24-007306**	CH.Nr.: 3825065 ->; mark: 518 L VA: Øa: 51 mm
B6 Sport	**518, 518i, 520/6** 09/76 - 08/81 66 -92 kW	**34-003268**	**24-007306**	CH.Nr.: 3825066 ->; mark: 518 L VA: Øa: 48 mm
B6 Sport	**520** 08/72 - 08/76 85 kW	**34-000243**	**24-007306**	-> CH.Nr.: 4405050; mark: 520- RL VA: Øa: 51 mm
B6 Sport	**520** 09/76 - 08/77 85 kW	**34-003268**	**24-007306**	CH.Nr.: 4405051 ->; mark: 520- RL VA: Øa: 48 mm
B6 Sport	**520** 08/72 - 08/76 85 kW	**34-000243**	**24-007306**	-> CH.Nr.: 4420496; mark: 520 A VA: Øa: 51 mm
B6 Sport	**520** 09/76 - 08/77 85 kW	**34-003268**	**24-007306**	CH.Nr.: 4420497 ->; mark: 520 A VA: Øa: 48 mm
B6 Sport	**520** 08/72 - 08/76 85 kW	**34-000243**	**24-007306**	-> CH.Nr.: 4435033; mark: 520 A- RL VA: Øa: 51 mm
B6 Sport	**520** 09/76 - 08/77 85 kW	**34-003268**	**24-007306**	CH.Nr.: 4435034 ->; mark: 520 A- RL VA: Øa: 48 mm
B6 Sport	**520** 08/72 - 08/76 85 kW	**34-000243**	**24-007306**	-> CH.Nr.: 5352904 VA: Øa: 51 mm
B6 Sport	**520** 09/76 - 08/77 85 kW	**34-003268**	**24-007306**	CH.Nr.: 5352905 -> VA: Øa: 48 mm
B6 Sport	**520 i** 08/72 - 08/76 92 -96 kW	**34-000243**	**24-007306**	-> CH.Nr.: 4445049; mark: 520i - RL VA: Øa: 51 mm
B6 Sport	**520 i** 09/76 - 05/77 92 kW	**34-003268**	**24-007306**	CH.Nr.: 4445050 ->; mark: 520i - RL VA: Øa: 48 mm
B6 Sport	**520 i** 08/72 - 08/76 92 -96 kW	**34-000243**	**24-007306**	-> CH.Nr.: 4460553 VA: Øa: 51 mm
B6 Sport	**520 i** 09/76 - 05/77 92 kW	**34-003268**	**24-007306**	CH.Nr.: 4460554 -> VA: Øa: 48 mm
B6 Sport	**525** 08/73 - 08/76 107 -110 kW	**34-000243**	**24-007306**	-> CH.Nr.: 4505038; mark: 525- RL VA: Øa: 51 mm
B6 Sport	**525** 09/76 - 05/81 107 -110 kW	**34-003268**	**24-007306**	CH.Nr.: 4505039 ->; mark: 525- RL VA: Øa: 48 mm
B6 Sport	**525** 08/73 - 08/76 107 -110 kW	**34-000243**	**24-007306**	-> CH.Nr.: 4520679; mark: 525 A VA: Øa: 51 mm
B6 Sport	**525** 09/76 - 05/81 107 -110 kW	**34-003268**	**24-007306**	CH.Nr.: 4520680 ->; mark: 525 A VA: Øa: 48 mm
B6 Sport	**525** 08/73 - 08/76 107 -110 kW	**34-000243**	**24-007306**	-> CH.Nr.: 4535039; mark: 525 A - RL VA: Øa: 51 mm
B6 Sport	**525** 09/76 - 05/81 107 -110 kW	**34-003268**	**24-007306**	CH.Nr.: 4535040 ->; mark: 525 A - RL VA: Øa: 48 mm

BMW

BMW 5 (E12)

B6 Sport	**525** 08/73 - 08/76 107 -110 kW	**34-000243**	**24-007306**	-> CH.Nr.: 4842122 VA: Øa: 51 mm
B6 Sport	**525** 09/76 - 05/81 107 -110 kW	**34-003268**	**24-007306**	CH.Nr.: 4842123 ->; VA: Øa: 48 mm
B6 Sport	**528** 01/75 - 08/76 121 -125 kW	**34-000243**	**24-007306**	-> CH.Nr.: 4730567; mark: 528 A VA: Øa: 51 mm
B6 Sport	**528** 09/76 - 08/77 121 -125 kW	**34-003268**	**24-007306**	CH.Nr.: 4730568 ->; mark: 528 A VA: Øa: 48 mm
B6 Sport	**528** 01/75 - 08/76 121 -125 kW	**34-000243**	**24-007306**	-> CH.Nr.: 4740067; mark: 528 RL VA: Øa: 51 mm
B6 Sport	**528, 528 i** 09/76 - 05/81 121 -130 kW	**34-003268**	**24-007306**	CH.Nr.: 4740068 ->; mark: 528 RL VA: Øa: 48 mm
B6 Sport	**528** 01/75 - 08/76 121 -125 kW	**34-000243**	**24-007306**	-> CH.Nr.: 4745034; mark: 528 A - RL VA: Øa: 51 mm
B6 Sport	**528, 528 i** 09/76 - 05/81 121 -130 kW	**34-003268**	**24-007306**	CH.Nr.: 4745035 ->; mark: 528 A - RL VA: Øa: 48 mm
B6 Sport	**528** 01/75 - 08/76 121 -125 kW	**34-000243**	**24-007306**	-> CH.Nr.: 4771420 VA: Øa: 51 mm
B6 Sport	**528, 528 i** 09/76 - 05/81 121 -135 kW	**34-003268**	**24-007306**	CH.Nr.: 4771421 ->; VA: Øa: 48 mm
B6 Sport	**M 535 i** 06/80 - 08/81 160 kW	**34-003268**		with standard chassis VA: Øa: 48 mm

BMW 5 (E28)

B1	**518, 518 i, 518i, 520 i, 524 d, 524 td, 525 e 2.7, 525 i, 528 i, 535 i, M 535 i, 535 i, M535 i** 06/81 - 12/87 63 -160 kW	**12-117628**		VA: Øi: 14 mm; Øa: 32 mm; with ball bearing
B3	**518, 518 i, 520 i, 524 d, 524 td, 525 e 2.7** 06/81 - 12/87 63 -95 kW	**36-133222**	**36-129270**	with standard chassis
B3	**520 i, 524 d, 524 td, 525 e 2.7, 525 i** 06/81 - 06/90 63 -110 kW	**36-133239**		with standard chassis; Heavy Duty Version .
B3	**525 i, 528 i** 06/81 - 12/87 110 -135 kW	**36-133239**	**36-129270**	with standard chassis
B4	**518, 518 i, 518i, 520 i, 524 d, 524 td, 525 e 2.7, 525 i, 528 i** 06/81 - 12/87 63 -135 kW	**21-030512** **11-101321** SP	**19-020174** **11-101451** SP	with standard chassis
B6 Sport	**518, 518 i, 518i, 520 i, 525 i** 06/81 - 12/87 66 -110 kW	**34-002339**	**24-006088**	with standard chassis
B6 Sport	**525 e 2.7** 01/85 - 12/87 90 -95 kW	**34-002339**	**24-006088**	with standard chassis
B6 Sport	**528 i** 06/81 - 12/87 135 kW	**34-002339**	**24-006088**	with standard chassis
B6 Sport	**535 i, M 535 i, 535 i, M535 i** 01/85 - 12/87 136 -160 kW	**34-002339**	**24-006088**	with standard chassis; mark: ex. M 535i
B6 Sport	**3.5, M5 3.5** 08/85 - 12/88 210 -211 kW	**34-002421**		

BMW				
BMW 5 (E28)				
B6 Sport	**524 d, 524 td** 09/83 - 12/87 63 -85 kW	**34-002339**	**24-006088**	with standard chassis
B8	**518, 518 i, 518i, 520 i, 524 d, 524 td, 525 e 2.7, 525 i, 528 i, 535 i, M 535 i, 535 i, M535 i** 06/81 - 12/87 63 -160 kW	**34-181546**	**24-007276**	HA: charakteristic: 270/100
B8	**518, 518 i, 518i, 520 i, 524 d, 524 td, 525 e 2.7, 525 i, 528 i** 06/81 - 12/87 63 -135 kW	**34-181546**	**24-006071**	HA: charakteristic: 160/80
BMW 5 (E34)				
B1	**518 i, 520 i, 520 i 24V, 524 td, 525 i, 525 i 24V, 525 td, 525 tds** 01/88 - 09/95 83 -141 kW	**12-117628**	**12-117116**	with standard chassis VA: Øi: 14 mm; Øa: 32 mm; with ball bearing HA: with M-technics
B1	**3.5, 525 i X 24V, 530 i, 530 i V8, 535 i, 540 i V8** 12/87 - 09/95 138 -210 kW		**12-117116**	with standard chassis; with M-technics
B3	**520 i, 520 i 24V, 525 i, 525 i 24V, 530 i, 535 i** 01/88 - 09/95 95 -155 kW	**36-129317**	**36-129331**	with standard chassis
B3	**520 i, 520 i 24V, 525 i, 525 i 24V, 530 i, 535 i** 01/88 - 09/95 95 -155 kW		**36-129096**	with standard chassis; Heavy Duty Version .
B3	**540 i V8** 09/92 - 09/95 210 kW	**36-153855**	**36-153862**	with standard chassis
B3	**540 i V8** 09/92 - 09/95 210 kW	**36-153886**	**36-129096**	with standard chassis; Heavy Duty Version .
B4	**518 i, 520 i, 520 i 24V** 01/88 - 07/90 83 -110 kW	**21-030253** **11-101321** SP	**19-020068**	with standard chassis
B4	**518 i, 520 i, 520 i 24V** 07/90 - 09/95 83 -110 kW	**21-031182** **11-101321** SP	**19-020068**	with standard chassis
B4	**518 i, 520 i, 520 i 24V** 01/88 - 07/90 83 -110 kW	**21-030246** **11-101321** SP	**19-020068**	with sports suspension; without lowered chassis
B4	**518 i** 07/90 - 09/95 83 -85 kW	**21-031199** **11-101321** SP	**19-020068**	with sports suspension; without lowered chassis
B4	**520 i 24V** 07/90 - 09/92 110 kW	**21-031199** **11-101321** SP	**19-020068**	with sports suspension; without lowered chassis
B4	**520 i 24V** 09/92 - 09/95 110 kW	**21-031182** **11-101321** SP	**19-020068**	with sports suspension; without lowered chassis
B4	**525 i, 530 i, 535 i** 01/88 - 07/90 125 -155 kW	**21-030246** **11-101321** SP	**19-020068**	with standard chassis; with sports suspension; without lowered chassis
B4	**525 i** 07/90 - 08/91 125 kW	**21-031199** **11-101321** SP	**19-020068**	with standard chassis; with sports suspension; without lowered chassis
B4	**525 i 24V** 09/89 - 07/90 141 kW	**21-030253** **11-101321** SP	**19-020068**	with standard chassis
B4	**525 i 24V** 07/90 - 09/92 141 kW	**21-031199** **11-101321** SP	**19-020068**	with standard chassis
B4	**525 i 24V** 09/92 - 09/95 141 kW	**21-031182** **11-101321** SP	**19-020068**	with standard chassis
B4	**525 i 24V** 09/89 - 09/92 141 kW	**21-031199** **11-101321** SP	**19-020068**	with sports suspension

BMW

BMW 5 (E34)

B4	**525 i X 24V** 10/91 - 09/95 141 kW		**19-020068**	
B4	**530 i, 535 i** 08/90 - 09/95 138 -155 kW	**21-031199** **11-101321** SP	**19-020068**	with sports suspension; without lowered chassis
B4	**530 i, 535 i** 08/90 - 09/95 138 -155 kW	**21-031199** **11-101321** SP	**19-020068**	with standard chassis
B4	**530 i V8, 540 i V8** 09/92 - 09/95 160 -210 kW	**21-031199** **11-101321** SP	**19-020068**	with standard chassis
B4	**524 td** 03/88 - 07/90 85 kW	**21-030246** **11-101321** SP	**19-020068**	with standard chassis; with sports suspension; without lowered chassis
B4	**524 td** 07/90 - 09/95 85 kW	**21-031199** **11-101321** SP	**19-020068**	with standard chassis
B4	**524 td** 07/90 - 09/92 85 kW	**21-031199** **11-101321** SP	**19-020068**	with sports suspension; without lowered chassis
B4	**525 td** 04/93 - 09/95 85 kW	**21-031199** **11-101321** SP	**19-020068**	with standard chassis
B4	**525 td** 04/93 - 09/95 85 kW	**21-031182** **11-101321** SP	**19-020068**	with sports suspension; without lowered chassis
B4	**525 tds** 09/91 - 09/92 105 kW	**21-031199** **11-101321** SP	**19-020068**	with standard chassis; with sports suspension; without lowered chassis
B4	**525 tds** 09/92 - 09/95 105 kW	**21-031182** **11-101321** SP	**19-020068**	with standard chassis; with sports suspension; without lowered chassis
B6 Sport	**518 i, 520 i, 520 i 24V** 01/88 - 09/95 83 -110 kW	**34-030233**	**24-012218**	with standard chassis; without ride height adjustment
B6 Sport	**520 i, 520 i 24V, 525 i, 525 i 24V** 01/88 - 07/90 95 -141 kW	**34-030219**	**24-012218**	with standard chassis; without ride height adjustment
B6 Sport	**520 i, 520 i 24V, 525 i, 525 i 24V** 08/90 - 09/95 95 -141 kW	**34-030226**	**24-012218**	with standard chassis; without ride height adjustment
B6 Sport	**525 i 24V, 525 tds** 09/89 - 09/92 105 -141 kW	**34-030226**	**24-012218**	with standard chassis; without ride height adjustment
B6 Sport	**525 i 24V, 525 td, 525 tds** 10/92 - 09/95 85 -141 kW	**34-030233**	**24-012218**	with standard chassis; without ride height adjustment
B6 Sport	**530 i V8, 540 i V8** 09/92 - 09/95 160 -210 kW	**34-030226**	**24-012218**	with standard chassis; without ride height adjustment
B6 Sport	**524 td, 530 i, 535 i** 01/88 - 07/90 85 -155 kW	**34-030219**	**24-012218**	with standard chassis; without ride height adjustment
B6 Sport	**524 td, 530 i, 535 i** 08/90 - 09/95 85 -155 kW	**34-030226**	**24-012218**	with standard chassis; without ride height adjustment
B8	**518 i, 520 i, 520 i 24V** 01/88 - 09/95 83 -110 kW	**34-030202**	**24-014861**	with standard chassis; without ride height adjustment
B8	**518 i, 520 i, 520 i 24V** 01/88 - 09/95 83 -110 kW	**34-030202**	**24-012478**	with standard chassis; without ride height adjustment HA: firmer setting
B8	**520 i, 520 i 24V, 525 i, 525 i 24V** 01/88 - 07/90 95 -141 kW	**34-030189**	**24-012478**	with M-technics; without ride height adjustment HA: firmer setting
B8	**520 i, 520 i 24V, 525 i, 525 i 24V** 08/90 - 09/95 95 -141 kW	**34-030196**	**24-012478**	with M-technics; without ride height adjustment HA: firmer setting

BMW

BMW 5 (E34)

B8	**520 i, 520 i 24V, 525 i, 525 i 24V** 01/88 - 07/90 95 -141 kW	**34-030189**	**24-014861**	with M-technics; without ride height adjustment
B8	**520 i, 520 i 24V, 525 i, 525 i 24V** 08/90 - 09/95 95 -141 kW	**34-030196**	**24-014861**	with M-technics; without ride height adjustment
B8	**525 i 24V, 525 tds** 08/90 - 09/92 105 -141 kW	**34-030196**	**24-012478**	with standard chassis; without ride height adjustment HA: firmer setting
B8	**525 i 24V, 525 td, 525 tds** 10/92 - 09/95 85 -141 kW	**34-030202**	**24-012478**	with standard chassis; without ride height adjustment HA: firmer setting
B8	**525 i 24V, 525 tds** 08/90 - 09/92 105 -141 kW	**34-030196**	**24-014861**	with standard chassis; without ride height adjustment
B8	**525 i 24V, 525 td, 525 tds** 10/92 - 09/95 85 -141 kW	**34-030202**	**24-014861**	with standard chassis; without ride height adjustment
B8	**530 i V8, 540 i V8** 09/92 - 09/95 160 -210 kW	**34-030196**	**24-014861**	with M-technics; without ride height adjustment
B8	**530 i V8, 540 i V8** 09/92 - 09/95 160 -210 kW	**34-030196**	**24-012478**	with M-technics; without ride height adjustment HA: firmer setting
B8	**3.5, 524 td, 530 i, 535 i, M5 3.6, M5 3.6 CAT** 12/87 - 07/90 85 -232 kW	**34-030189**	**24-014861**	with M-technics; without ride height adjustment
B8	**524 td, 525 i, 525 i 24V, 530 i, 535 i** 01/88 - 07/90 85 -155 kW	**34-030189**	**24-012478**	with standard chassis; without ride height adjustment HA: firmer setting
B8	**524 td, 530 i, 535 i** 01/88 - 07/90 85 -155 kW	**34-030189**	**24-012478**	with M-technics; without ride height adjustment HA: firmer setting
B8	**524 td, 525 i, 530 i, 535 i** 08/90 - 09/95 85 -155 kW	**34-030196**	**24-012478**	with standard chassis; without ride height adjustment HA: firmer setting
B8	**524 td, 530 i, 535 i** 08/90 - 09/95 85 -155 kW	**34-030196**	**24-012478**	with M-technics; without ride height adjustment HA: firmer setting
B8	**524 td, 525 i, 525 i 24V, 530 i, 535 i** 01/88 - 07/90 85 -155 kW	**34-030189**	**24-014861**	with standard chassis; without ride height adjustment
B8	**524 td, 525 i, 530 i, 535 i** 08/90 - 09/95 85 -155 kW	**34-030196**	**24-014861**	with standard chassis; without ride height adjustment
B8	**524 td, 530 i, 535 i** 08/90 - 09/95 85 -155 kW	**34-030196**	**24-014861**	with M-technics; without ride height adjustment

B12 PK	**518 i, 520 i, 520 i 24V** 01/88 - 09/95 83 -110 kW	**46-190925**	without ride height adjustment; Conditions see certificates VA: lowering (expertise): 25-35 mm; axle load to: 970 kg HA: lowering (expertise): 20-30 mm; axle load to: 1300 kg
B12 PK	**525 i, 525 i 24V** 01/88 - 07/90 125 -141 kW	**46-190901**	without ride height adjustment; Conditions see certificates VA: lowering (expertise): 25-35 mm; axle load to: 970 kg HA: lowering (expertise): 20-30 mm; axle load to: 1300 kg
B12 PK	**525 i, 525 i 24V** 08/90 - 09/92 125 -141 kW	**46-190918**	without ride height adjustment; Conditions see certificates VA: lowering (expertise): 25-35 mm; axle load to: 970 kg HA: lowering (expertise): 20-30 mm; axle load to: 1300 kg
B12 PK	**525 i 24V** 10/92 - 09/95 141 kW	**46-190925**	without ride height adjustment; Conditions see certificates VA: lowering (expertise): 25-35 mm; axle load to: 970 kg HA: lowering (expertise): 20-30 mm; axle load to: 1300 kg
B12 PK	**524 td, 530 i, 535 i** 01/88 - 07/90 85 -155 kW	**46-190871**	without ride height adjustment; Conditions see certificates VA: lowering (expertise): 25-35 mm; axle load to: 1060 kg HA: lowering (expertise): 20-30 mm; axle load to: 1300 kg
B12 PK	**524 td, 525 tds, 530 i, 535 i** CH-Nr. - CH-Nr. 85 -155 kW	**46-190888**	CH.Nr.: 199008-> 199209; without ride height adjustment; Conditions see certificates VA: lowering (expertise): 25-35 mm; axle load to: 1060 kg HA: lowering (expertise): 20-30 mm; axle load to: 1300 kg
B12 PK	**524 td, 525 td, 525 tds** CH-Nr. - 09/95 85 -105 kW	**46-190895**	CH.Nr.: 199210 ->; without ride height adjustment; Conditions see certificates VA: lowering (expertise): 25-35 mm; axle load to: 1060 kg HA: lowering (expertise): 20-30 mm; axle load to: 1300 kg

BMW

BMW 5 (E34)

B12 SL	**518 i, 520 i, 520 i 24V** 01/88 - 09/95 83 -110 kW	**46-190956**		without ride height adjustment; Conditions see certificates VA: lowering (expertise): 45-50 mm; axle load to: 975 kg HA: lowering (expertise): 30 mm; axle load to: 1300 kg
B12 SL	**525 i 24V, 525 tds** 08/90 - 09/92 105 -141 kW	**46-190949**		without ride height adjustment; Conditions see certificates VA: lowering (expertise): 45-50 mm; axle load to: 975 kg HA: lowering (expertise): 30 mm; axle load to: 1300 kg
B12 SL	**525 i 24V, 525 td, 525 tds** 10/92 - 09/95 85 -141 kW	**46-190956**		without ride height adjustment; Conditions see certificates VA: lowering (expertise): 45-50 mm; axle load to: 975 kg HA: lowering (expertise): 30 mm; axle load to: 1300 kg
B12 SL	**524 td, 525 i, 525 i 24V, 530 i, 535 i** 01/88 - 07/90 85 -155 kW	**46-190932**		without ride height adjustment; Conditions see certificates VA: lowering (expertise): 45-50 mm; axle load to: 975 kg HA: lowering (expertise): 30 mm; axle load to: 1300 kg
B12 SL	**524 td, 525 i, 530 i, 535 i** 01/88 - 09/95 85 -155 kW	**46-190949**		without ride height adjustment; Conditions see certificates VA: lowering (expertise): 45-50 mm; axle load to: 975 kg HA: lowering (expertise): 30 mm; axle load to: 1300 kg

BMW 5 Touring (E34)

B1	**518 g, 518 i, 520 i, 525 i, 525 td, 525 tds** 12/91 - 01/97 83 -141 kW	**12-117628**	**12-117116**	with standard chassis VA: Øi: 14 mm; Øa: 32 mm; with ball bearing HA: with M-technics
B3	**518 i, 520 i** 11/91 - 01/97 83 -110 kW	**36-133246**	**36-129119**	with standard chassis
B3	**518 i, 520 i, 525 i, 525 td, 525 tds, 530 i V8, 540 i** 09/92 - 01/97 83 -210 kW	**36-153886**		with standard chassis; Heavy Duty Version .
B3	**525 i** 11/91 - 01/97 141 kW	**36-129317**	**36-129119**	with standard chassis
B3	**530 i V8, 540 i** 09/92 - 01/97 160 -210 kW	**36-153855**	**36-153923**	with standard chassis
B3	**525 td, 525 tds** 12/91 - 01/97 85 -105 kW	**36-129317**	**36-133253**	with standard chassis
B4	**518 i, 520 i, 525 td** 11/91 - 01/97 83 -110 kW	**21-031182**	**19-020068**	with standard chassis
B4	**525 i, 530 i V8** 11/91 - 01/97 141 -160 kW	**21-031199** **11-101321** SP		with standard chassis
B4	**525 i X** 02/92 - 01/97 141 kW		**19-020068**	
B4	**525 tds** 12/91 - 01/97 105 kW	**21-031199** **11-101321** SP	**19-020068**	with standard chassis; with sports suspension; without lowered chassis
B6 Sport	**518 g, 518 i, 520 i** 11/91 - 01/97 83 -110 kW	**34-030233**	**24-012218**	with standard chassis; without ride height adjustment
B6 Sport	**525 i** 11/91 - 01/97 141 kW	**34-030226**		with standard chassis
B6 Sport	**530 i V8, 540 i** 09/92 - 01/97 160 -210 kW	**34-030226**		with standard chassis
B6 Sport	**525 td, 525 tds** 12/91 - 01/97 85 -105 kW	**34-030226**	**24-012218**	with standard chassis; without ride height adjustment
B8	**518 g, 518 i, 520 i** 11/91 - 01/97 83 -110 kW	**34-030202**	**24-014861**	with standard chassis; without ride height adjustment
B8	**520 i** 11/91 - 01/97 110 kW	**34-030196**	**24-014861**	with M-technics; without ride height adjustment
B8	**525 i, 530 i V8, 540 i** 11/91 - 01/97 141 -210 kW	**34-030196**		with standard chassis; with M-technics

BMW				
BMW 5 Touring (E34)				
B8	**525 td, 525 tds** 12/91 - 01/97 85 -105 kW	**34-030196**	**24-014861**	with standard chassis; without ride height adjustment
B12 PK	**518 i, 520 i, 525 i** 11/91 - 01/97 83 -141 kW	**46-190925**		without ride height adjustment; Conditions see certificates VA: lowering (expertise): 25-35 mm; axle load to: 970 kg HA: lowering (expertise): 20-30 mm; axle load to: 1300 kg
B12 PK	**525 td, 525 tds, 530 i V8, 540 i** 09/92 - 01/97 85 -210 kW	**46-190888**		without ride height adjustment; Conditions see certificates VA: lowering (expertise): 25-35 mm; axle load to: 1060 kg HA: lowering (expertise): 20-30 mm; axle load to: 1300 kg
BMW 5 (E39)				
B1	**520 i, 523 i, 525 td, 525 tds, 528 i** 11/95 - 09/97 85 -142 kW	**12-117598**	**12-117123**	VA: with ball bearing
B1	**520 i, 523 i, 525 td, 525 tds, 528 i** 10/97 - 06/03 85 -142 kW	**12-117260**	**12-117123**	VA: with ball bearing
B1	**535 i, 540 i** 04/96 - 06/03 173 -210 kW	**12-224425**	**12-117123**	with standard chassis VA: without ball bearing
B1	**535 i, 540 i** 04/96 - 06/03 173 -210 kW	**12-224425**	**12-224418**	VA: without ball bearing HA: with electronic suspension control
B1	**535 i, 540 i** 04/96 - 06/03 173 -210 kW	**12-224425**	**12-224401**	VA: without ball bearing HA: with M-technics
B1	**520 d, 520 i, 525 d, 525 i, 530 d, 530 i** 08/98 - 06/03 100 -170 kW	**12-117260**	**12-117123**	VA: with ball bearing
B3	**528 i, 530 d, 530 i, 535 i, 540 i** 11/95 - 06/03 135 -210 kW	**36-129171**	**36-129140**	with standard chassis
B3	**520 d, 520 i, 523 i, 525 d, 525 i, 525 tds** 01/96 - 06/03 100 -141 kW	**36-129164**	**36-129140**	with standard chassis
B4	**535 i, 540 i** 04/96 - 06/03 173 -210 kW	*22-100177* **i.V.** SP	**19-067346**	with standard chassis VA: serie production spring seat must be used
B4	**535 i, 540 i** 04/96 - 06/03 173 -210 kW	**22-111081** **i.V.** SP	**19-067346**	with standard chassis
B4	**520 d, 520 i, 523 i, 525 d, 525 i, 525 td, 525 tds, 528 i, 530 d, 530 i** 08/98 - 06/03 85 -170 kW	**22-111074** **i.V.** SP	**19-067346**	with standard chassis
B6 Sport	**535 i, 540 i** 04/96 - 06/03 173 -210 kW	**35-114086**	**24-028288**	without M-technics; without ride height adjustment; without pneumatic suspension
B6 Sport	**535 i, 540 i** 04/96 - 06/03 173 -210 kW	*22-044402*	**24-028288**	with standard chassis; without M-technics; without ride height adjustment VA: serie production spring seat must be used
B6 Sport	**520 d, 520 i, 523 i, 525 d, 525 i, 525 td, 525 tds, 528 i, 530 d, 530 i** 08/98 - 06/03 85 -170 kW	**35-114062**	**24-028288**	with standard chassis; without M-technics; without ride height adjustment VA: mono-tube
B6 Sport	**520 d, 520 i, 523 i, 525 d, 525 i, 525 td, 525 tds, 528 i, 530 d, 530 i** 08/98 - 06/03 85 -170 kW	*22-044389*	**24-028288**	with standard chassis; without M-technics; without ride height adjustment VA: serie production spring seat must be used; twin-tube
B8	**535 i, 540 i, M5** 04/96 - 06/03 173 -294 kW	**35-114093**	**24-028295**	with M-technics; without electronic suspension control; without ride height adjustment; without pneumatic suspension
B8	**535 i, 540 i** 04/96 - 06/03 173 -210 kW	*22-044419*	**24-028295**	with standard chassis; with M-technics; without ride height adjustment VA: serie production spring seat must be used
B8	**520 d, 520 i, 523 i, 525 d, 525 i, 525 td, 525 tds, 528 i, 530 d, 530 i** 08/98 - 06/03 85 -170 kW	**35-114079**	**24-028295**	with M-technics; without ride height adjustment VA: mono-tube

BMW

BMW 5 (E39)

B8	**520 d, 520 i, 523 i, 525 d, 525 i, 525 td, 525 tds, 528 i, 530 d, 530 i** 08/98 - 06/03 85 -170 kW	*22-044396*	**24-028295**	with M-technics; without ride height adjustment VA: serie production spring seat must be used; twin-tube
B12 PK	**535 i, 540 i** 04/96 - 06/03 173 -210 kW	**46-180858**		without electronic suspension control; without ride height adjustment; Conditions see certificates VA: lowering (expertise): 30 mm; axle load to: 1100 kg HA: lowering (expertise): 20-25 mm; axle load to: 1290 kg
B12 PK	**520 d, 520 i, 523 i, 525 i, 525 td, 525 tds, 528 i, 530 i** 11/95 - 06/03 85 -170 kW	**46-180841**		without electronic suspension control; without ride height adjustment; Conditions see certificates VA: lowering (expertise): 30 mm; axle load to: 1065 kg HA: lowering (expertise): 20-25 mm; axle load to: 1290 kg
B12 PK	**525 d, 530 d** 08/98 - 06/03 120 -142 kW	**46-180865**		without electronic suspension control; without ride height adjustment; Conditions see certificates VA: lowering (expertise): 30 mm; axle load to: 1100 kg HA: lowering (expertise): 20-25 mm; axle load to: 1290 kg
B12 SL	**520 d, 520 i, 523 i, 525 i, 525 td, 525 tds, 528 i, 530 i** 11/95 - 06/03 85 -170 kW	**46-180926**		without electronic suspension control; without ride height adjustment; Conditions see certificates VA: lowering (expertise): 45-50 mm; axle load to: 1040 kg HA: lowering (expertise): 30 mm; axle load to: 1170 kg
B14	**535 i, 540 i** 04/96 - 06/03 173 -210 kW	**47-111264**		Spacers required for several wheel/tyre combinations; with standard chassis; with M-technics; without electronic suspension control; without ride height adjustment; Conditions see certificates VA: lowering (expertise): 25-50 mm; axle load to: 1105 kg HA: lowering (expertise): 20-50 mm; axle load to: 1225 kg
B14	**M5** 09/98 - 06/03 230 -294 kW	**47-111264**		Spacers required for several wheel/tyre combinations; with standard chassis; without electronic suspension control; without ride height adjustment; Conditions see certificates VA: lowering (expertise): 40-50 mm; Only in connection with 33 53 1 091 924; axle load to: 1105 kg HA: lowering (expertise): 40-50 mm; axle load to: 1225 kg
B14	**520 d, 520 i, 523 i, 525 d, 525 i, 525 td, 525 tds, 528 i, 530 d, 530 i** 08/98 - 06/03 85 -170 kW	**47-100763**		Spacers required for several wheel/tyre combinations; without electronic suspension control; without ride height adjustment; Conditions see certificates VA: lowering (expertise): 35-50 mm; axle load to: 1105 kg HA: lowering (expertise): 20-50 mm; axle load to: 1225 kg
B16 PSS9	**535 i, 540 i** 04/96 - 06/03 173 -210 kW	**48-104555**		Spacers required for several wheel/tyre combinations; with standard chassis; with M-technics; without electronic suspension control; without ride height adjustment; Conditions see certificates VA: lowering (expertise): 25-50 mm; axle load to: 1105 kg HA: lowering (expertise): 20-50 mm; axle load to: 1225 kg
B16 PSS9	**M5** 09/98 - 06/03 230 -294 kW	**48-104555**		Spacers required for several wheel/tyre combinations; with standard chassis; without electronic suspension control; without ride height adjustment; Conditions see certificates VA: lowering (expertise): 25-50 mm; Only in connection with 33 53 1 091 924; axle load to: 1105 kg HA: lowering (expertise): 20-50 mm; axle load to: 1225 kg
B16 PSS9	**520 d, 520 i, 523 i, 525 d, 525 i, 525 td, 525 tds, 528 i, 530 d, 530 i** 08/98 - 06/03 85 -170 kW	**48-104692**		Spacers required for several wheel/tyre combinations; without electronic suspension control; without ride height adjustment; Conditions see certificates VA: lowering (expertise): 35-50 mm; axle load to: 1105 kg HA: lowering (expertise): 20-50 mm; axle load to: 1225 kg

BMW 5 Touring (E39)

B1	**520 i, 523 i, 525 tds, 528 i** 01/97 - 09/97 105 -142 kW	**12-117598**	**12-117703**	VA: with ball bearing
B1	**520 i, 523 i, 525 tds, 528 i** 10/97 - 05/04 105 -142 kW	**12-117260**	**12-117703**	VA: with ball bearing
B1	**520 d, 520 i, 525 d, 525 i, 530 d, 530 i** 08/98 - 05/04 100 -170 kW	**12-117260**	**12-117703**	VA: with ball bearing
B3	**520 i, 523 i, 525 d, 525 i, 525 tds, 530 d** 08/98 - 05/04 100 -142 kW		**36-153954**	with standard chassis; Heavy Duty Version .
B3	**520 d, 520 i, 523 i, 525 i** 01/97 - 05/04 100 -141 kW	**36-129164**	**36-133260**	with standard chassis

BMW

BMW 5 Touring (E39)

B3	**525 d, 525 tds** 03/97 - 05/04 105 -120 kW	**36-129164**	**36-133277**	with standard chassis
B3	**530 d** 08/98 - 05/04 135 -142 kW	**36-129171**	**36-133277**	with standard chassis
B4	**540 i** 01/97 - 05/04 210 kW	*22-100177* **i.V.** SP	**19-132341**	VA: serie production spring seat must be used HA: with air suspension
B4	**540 i** 01/97 - 05/04 210 kW	**22-111081** **i.V.** SP	**19-132341**	HA: with air suspension
B4	**520 d, 520 i, 523 i, 525 d, 525 i, 525 tds, 528 i, 530 d, 530 i** 08/98 - 05/04 100 -170 kW	**22-111074** **i.V.** SP	**19-106649**	with standard chassis HA: without pneumatic suspension
B4	**520 d, 520 i, 523 i, 525 d, 525 i, 525 tds, 528 i, 530 d, 530 i** 08/98 - 05/04 100 -170 kW	**22-111074** **i.V.** SP	**19-132341**	with standard chassis HA: with air suspension
B6 Sport	**520 i, 523 i, 525 i, 525 tds, 528 i, 530 i** 01/97 - 05/04 100 -170 kW	*22-044389*	**24-060967**	with standard chassis; with ride height adjustment VA: serie production spring seat must be used HA: with air suspension
B6 Sport	**540 i** 01/97 - 05/04 210 kW	**35-114086**	**24-060967**	without M-technics; with ride height adjustment; with air suspension
B6 Sport	**540 i** 01/97 - 05/04 210 kW	*22-044402*	**24-060967**	with standard chassis; without M-technics; with ride height adjustment VA: serie production spring seat must be used
B6 Sport	**520 d, 520 i, 523 i, 525 d, 525 i, 525 tds, 528 i, 530 d, 530 i** 08/98 - 05/04 100 -170 kW	**35-114062**	**24-060615**	with standard chassis; without ride height adjustment HA: with coil-spring suspension
B6 Sport	**520 d, 520 i, 523 i, 525 d, 525 i, 525 tds, 528 i, 530 d, 530 i** 08/98 - 05/04 100 -170 kW	**35-114062**	**24-060967**	with standard chassis; with ride height adjustment HA: with air suspension
B6 Sport	**520 d, 520 i, 523 i, 525 d, 525 i, 525 tds, 528 i, 530 d, 530 i** 08/98 - 05/04 100 -170 kW	*22-044389*	**24-060615**	with standard chassis; without ride height adjustment VA: serie production spring seat must be used HA: with coil-spring suspension
B8	**540 i** 01/97 - 05/04 210 kW	**35-114093** *35-118657*	**24-060967**	with M-technics HA: with air suspension
B8	**540 i** 01/97 - 05/04 210 kW	*22-044419*	**24-060967**	with M-technics VA: serie production spring seat must be used HA: with air suspension
B8	**520 d, 520 i, 523 i, 525 d, 525 i, 525 tds, 528 i, 530 d, 530 i** 08/98 - 05/04 100 -170 kW	**35-114079**	**24-060615**	with M-technics; without ride height adjustment; without pneumatic suspension
B8	**520 d, 520 i, 523 i, 525 d, 525 i, 525 tds, 528 i, 530 d, 530 i** 08/98 - 05/04 100 -170 kW	**35-114079**	**24-060967**	with M-technics HA: with ride height adjustment; with air suspension
B12 PK	**540 i** 01/97 - 05/04 210 kW	**46-180902**		without electronic suspension control; with ride height adjustment; Conditions see certificates; with air suspension VA: lowering (expertise): 30 mm; axle load to: 1100 kg
B12 PK	**520 d, 520 i, 523 i, 525 i, 525 tds, 528 i, 530 i** 01/97 - 05/04 100 -170 kW	**46-180872**		without electronic suspension control; without ride height adjustment; Conditions see certificates; without pneumatic suspension VA: lowering (expertise): 30 mm; axle load to: 1065 kg HA: lowering (expertise): 25-30 mm; axle load to: 1390 kg
B12 PK	**520 d, 520 i, 523 i, 525 i, 525 tds, 528 i, 530 i** 01/97 - 05/04 100 -170 kW	**46-180896**		without electronic suspension control; with ride height adjustment; Conditions see certificates; with air suspension VA: lowering (expertise): 30 mm; axle load to: 1065 kg
B12 PK	**525 d, 530 d** 08/98 - 05/04 120 -142 kW	**46-180889**		without electronic suspension control; without ride height adjustment; Conditions see certificates; without pneumatic suspension VA: lowering (expertise): 30 mm; axle load to: 1100 kg HA: lowering (expertise): 25-30 mm; axle load to: 1390 kg

BMW

BMW 5 Touring (E39)

B12 PK	**525 d, 530 d** 08/98 - 05/04 120 -142 kW	**46-180919**		without electronic suspension control; with ride height adjustment; Conditions see certificates; with air suspension VA: lowering (expertise): 30 mm; axle load to: 1100 kg

BMW 5 Touring (E61)

B1	**520d, 520i, 523i, 525d, 525i, 530d, 530i, 535d, 545i, 550i** 07/05 - 110 -270 kW	**12-117260**		VA: with ball bearing
B1	**525xd, 525xi, 530xd, 530xi** 07/05 - 145 -200 kW	**12-117260**		VA: 11/08 ->
B3	**545i** 06/04 - 245 kW	**37-161859**		with standard chassis
B3	**520d, 520i, 523i, 525i, 530i** 07/05 - 110 -200 kW	**37-161859**		with standard chassis; Heavy Duty Version .
B3	**520d, 520i, 523i, 525d, 525i, 530d, 530i, 535d, 550i** 07/05 - 110 -270 kW	**37-161866**		with standard chassis
B4	**520d, 520i, 523i, 525d, 525i, 530d, 530i, 535d, 545i, 550i** 07/05 - 110 -270 kW	**22-138361**	**19-145747**	with standard chassis
B6 Sport	**520d, 520i, 523i, 525d, 525i, 530d, 530i, 535d, 545i, 550i** 07/05 - 110 -270 kW	**35-109631**	**24-120708**	without electronic suspension control; with standard chassis
B6 Sport	**525d xDrive, 525i xDrive, 525xd, 525xi, 530d xDrive, 530i xDrive, 530xd, 530xi** 01/07 - 145 -200 kW	**35-141761** **35-141778**	**24-120708**	
B8	**520d, 520i, 523i, 525d, 525i, 530d, 530i, 535d, 545i, 550i** 07/05 - 110 -270 kW	**35-109655**	**24-120708**	without electronic suspension control; with sports suspension
B8	**525d xDrive, 525i xDrive, 525xd, 525xi, 530d xDrive, 530i xDrive, 530xd, 530xi** 01/07 - 145 -200 kW	**35-141792** **35-141808**	**24-120708**	
B12 PK	**520d, 520i, 523i, 525i, 530i** 07/05 - 110 -200 kW	**46-181138**		without electronic suspension control; Conditions see certificates VA: lowering (expertise): 30 mm; axle load to: 990 kg HA: lowering (expertise): 30 mm; axle load to: 1300 kg
B12 PK	**525d, 530d, 535d, 545i, 550i** 06/04 - 120 -270 kW	**46-181145**		without electronic suspension control; Conditions see certificates VA: lowering (expertise): 30 mm; axle load to: 1070 kg HA: lowering (expertise): 30 mm; axle load to: 1300 kg

BMW 5 GRAN TURISMO (F07GT)

B4	**530d, 535d, 535i, 550i** 10/09 - 155 -300 kW	**19-195339** **19-195346**	**19-195353**	with standard chassis; without electronic suspension control
B6 Sport	**530d, 535d, 535i, 550i** 10/09 - 155 -300 kW	**24-193580** **24-193597**	**24-178617**	with standard chassis; without electronic suspension control

BMW 5 (F10)

B4	**520d, 520i, 523i, 525d, 528i, 530d, 530i, 535d, 535i, 550i** 03/10 - 120 -300 kW	**19-193298** **19-193304**	**19-193311**	with standard chassis; without electronic suspension control
B6 Sport	**520d, 520i, 523i, 525d, 528i, 530d, 530i, 535d, 535i, 550i** 03/10 - 120 -300 kW	**24-178488** **24-178495**	**24-176255**	with standard chassis; without electronic suspension control

BMW

BMW 5 (F10)

B8	**520d, 520i, 523i, 525d, 528i, 530d, 530i, 535d, 535i, 550i** 03/10 - 120 -300 kW	**24-178501** **24-178518**	**24-178525**	with M-technics; without electronic suspension control
B12 PK	**550i** 03/10 - 300 kW	**46-195128**		without electronic suspension control; without ride height adjustment; Conditions see certificates VA: lowering (expertise): 30 mm; axle load to: 1250 kg HA: lowering (expertise): 30 mm; axle load to: 1320 kg
B12 PK	**520d, 520i, 523i, 528i** 03/10 - 120 -190 kW	**46-195104**		without electronic suspension control; without ride height adjustment; Conditions see certificates VA: lowering (expertise): 30 mm; axle load to: 1070 kg HA: lowering (expertise): 30 mm; axle load to: 1310 kg
B12 PK	**525d, 530d, 530i, 535d, 535i** 03/10 - 150 -230 kW	**46-195111**		without electronic suspension control; without ride height adjustment; Conditions see certificates VA: lowering (expertise): 30 mm; axle load to: 1190 kg HA: lowering (expertise): 30 mm; axle load to: 1310 kg
B16 PSS10	**520d, 520i, 523i, 525d, 528i, 530d, 530i, 535d, 535i, 550i** 03/10 - 120 -300 kW	**48-177580**		without electronic suspension control; Conditions see certificates VA: lowering (expertise): 10-30 mm; axle load to: 1250 kg HA: lowering (expertise): 10-30 mm; axle load to: 1320 kg

BMW 5 (E60)

B1	**3.0, 520d, 520i, 523i, 525d, 525i, 530d, 530i, 535d, 540i, 545i** 09/03 - 110 -245 kW	**12-117260**	**12-224302**	VA: with ball bearing
B1	**525xd, 525xi, 530xd, 530xi** 07/05 - 145 -200 kW	**12-224432**	**12-224302**	VA: -> 10/08
B1	**525xd, 525xi, 530xd, 530xi** 07/05 - 145 -200 kW	**12-117260**	**12-224302**	VA: 11/08 ->
B3	**520i, 523i, 525i** 01/07 - 125 -160 kW	**37-161903**	**36-161485**	with standard chassis
B3	**520i, 523i, 525i** 07/05 - 125 -160 kW	**37-161897**	**36-161409**	with standard chassis; Heavy Duty Version .
B3	**520d, 530i** 07/05 - 110 -200 kW	**37-161897**	**36-161485**	with standard chassis
B3	**520d, 530i** 07/05 - 110 -200 kW	**37-161880**	**36-161409**	with standard chassis; Heavy Duty Version .
B3	**525d, 535d, 540i, 545i, 550i** 09/03 - 120 -270 kW	**37-161880**	**36-161409**	with standard chassis
B3	**530d** 07/03 - 160 -173 kW	**37-161880**	**36-161485**	with standard chassis
B3	**530d** 07/03 - 160 -173 kW		**36-161409**	with standard chassis; Heavy Duty Version .
B4	**3.0, 520d, 520i, 523i, 525d, 525i, 530d, 530i, 535d** 09/04 - 110 -225 kW	**22-138361**	**19-138381**	with standard chassis
B4	**3.0, 520d, 520i, 523i, 525d, 525i, 530d, 530i, 535d** 09/04 - 110 -225 kW	**22-212696**	**19-212722**	with M-technics
B6 Sport	**3.0, 520d, 520i, 523i, 525d, 525i, 530d, 530i, 535d, 540i, 545i, 550i** 07/05 - 110 -270 kW	**35-109631**	**24-109642**	without electronic suspension control; with standard chassis; without ride height adjustment
B6 Sport	**525d xDrive, 525i xDrive, 525xd, 525xi, 530d xDrive, 530i xDrive, 530xd, 530xi** 01/07 - 145 -200 kW	**35-141761** **35-141778**	**24-141789**	

BMW				
BMW 5 (E60)				
B8	**3.0, 520d, 520i, 523i, 525d, 525i, 530d, 530i, 535d, 540i, 545i, 550i** 07/05 - 110 -270 kW	**35-109655**	**24-109666**	without electronic suspension control; with sports suspension; without ride height adjustment
B8	**525d xDrive, 525i xDrive, 525xd, 525xi, 530d xDrive, 530i xDrive, 530xd, 530xi** 01/07 - 145 -200 kW	**35-141792** **35-141808**	**24-141819**	
B12 PK	**3.0, 540i, 545i, 550i** 07/05 - 225 -270 kW	**46-181121**		without electronic suspension control; Conditions see certificates VA: lowering (expertise): 30 mm; axle load to: 1070 kg HA: without ride height adjustment; lowering (expertise): 30 mm; axle load to: 1275 kg
B12 PK	**520d, 520i, 523i, 525i, 530i** 07/05 - 110 -200 kW	**46-181107**		without electronic suspension control; Conditions see certificates VA: lowering (expertise): 30 mm; axle load to: 990 kg HA: without ride height adjustment; lowering (expertise): 30 mm; axle load to: 1245 kg
B12 PK	**525d, 530d, 535d** 09/04 - 120 -210 kW	**46-181114**		without electronic suspension control; Conditions see certificates VA: lowering (expertise): 30 mm; axle load to: 1070 kg HA: without ride height adjustment; lowering (expertise): 30 mm; axle load to: 1245 kg
B12 SL	**3.0, 525d, 530d, 535d, 540i, 545i, 550i** 07/05 - 120 -270 kW	**46-181206**		without electronic suspension control; Conditions see certificates VA: lowering (expertise): 45-50 mm; axle load to: 1070 kg HA: without ride height adjustment; lowering (expertise): 30 mm; axle load to: 1300 kg
B12 SL	**520d, 520i, 523i, 525i, 530i** 07/05 - 110 -200 kW	**46-181190**		without electronic suspension control; Conditions see certificates VA: lowering (expertise): 45-50 mm; axle load to: 990 kg HA: without ride height adjustment; lowering (expertise): 30 mm; axle load to: 1300 kg
B14	**3.0, 520d, 520i, 523i, 525d, 525i, 530d, 530i, 535d, 540i, 545i, 550i** 07/05 - 110 -270 kW	**47-111165**		without electronic suspension control; without ride height adjustment; Conditions see certificates VA: lowering (expertise): 30-50 mm; axle load to: 1070 kg HA: lowering (expertise): 30-50 mm; axle load to: 1300 kg
B16 PSS10	**3.0, 520d, 520i, 523i, 525d, 525i, 530d, 530i, 535d, 540i, 545i, 550i** 07/05 - 110 -270 kW	**48-135498**		without electronic suspension control; without ride height adjustment; Conditions see certificates VA: lowering (expertise): 30-50 mm; axle load to: 1070 kg HA: lowering (expertise): 30-50 mm; axle load to: 1300 kg
B16 RC	**3.0, 520d, 520i, 523i, 525d, 525i, 530d, 530i, 535d, 540i, 545i, 550i** 07/05 - 110 -270 kW	**49-135169**		without electronic suspension control; without ride height adjustment; Conditions see certificates VA: lowering (expertise): 30-50 mm; axle load to: 1070 kg HA: lowering (expertise): 30-50 mm; axle load to: 1300 kg
BMW 5 Touring (F11)				
B4	**520d, 520i, 523i, 525d, 528i, 530d, 530i, 535d, 535i, 550i** 03/10 - 135 -300 kW	**19-193298** **19-193304**	**19-193328**	with standard chassis; without electronic suspension control
B6 Sport	**520d, 520i, 523i, 525d, 528i, 530d, 530i, 535d, 535i, 550i** 03/10 - 135 -300 kW	**24-178488** **24-178495**	**24-178617**	with standard chassis; without electronic suspension control
B8	**520d, 520i, 523i, 525d, 528i, 530d, 530i, 535d, 535i, 550i** 03/10 - 135 -300 kW	**24-178501** **24-178518**	**24-178617**	with M-technics; without electronic suspension control
B12 PK	**520d, 520i, 523i, 525d, 528i, 530i** 09/10 - 135 -200 kW	**46-195173**		without electronic suspension control; with ride height adjustment; Conditions see certificates VA: lowering (expertise): 30 mm; axle load to: 1070 kg HA: lowering (expertise): 15-20 mm; with air suspension
B12 PK	**525d, 530d, 535d, 535i** 09/10 - 150 -230 kW	**46-195180**		without electronic suspension control; with ride height adjustment; Conditions see certificates VA: lowering (expertise): 30 mm; axle load to: 1190 kg HA: lowering (expertise): 15-20 mm; with air suspension
BMW 6 (E24)				
B1	**3.5, 628 CSi, 633 CSi, 635 CSi, 635i, M 635 CSi** 11/81 - 09/90 135 -211 kW	**12-117628**		VA: 05/82 ->; Øa: 32 mm; with ball bearing

BMW				
BMW 6 (E24)				
B3	**628 CSi, 630 CS, 633 CSi, 635 CSi** 02/79 - 01/82 135 -160 kW	**36-159826**	**36-153930**	with standard chassis
B3	**628 CSi, 633 CSi, 635 CSi, 635i** 02/82 - 10/89 135 -160 kW	**36-159642**	**36-153961**	with standard chassis
B3	**630 CS, 633 CSi, 635 CSi** 04/76 - 01/79 135 -160 kW	**36-159659**	**36-153930**	with standard chassis
B4	**628 CSi, 633 CSi** 06/82 - 08/87 135 -145 kW	**21-030512** **11-101321** SP	**19-020174** **11-101451** SP	
B4	**635 CSi** 01/85 - 09/90 136 -155 kW	**21-030512** **11-101321** SP	**19-020174** **11-101451** SP	
B6 Sport	**628 CSi, 633 CSi, 635 CSi, 635i** 12/79 - 05/82 135 -160 kW	**34-002292**	**24-008020**	with standard chassis
B6 Sport	**630 CS** CH-Nr. - 08/79 135 -136 kW	**34-002292**	**24-008020**	CH.Nr.: 4361010 ->; with standard chassis
B6 Sport	**630 CS** CH-Nr. - 08/79 135 -136 kW	**34-002292**	**24-008020**	CH.Nr.: 4365393 ->; with standard chassis; mark: 630 CS-A
B6 Sport	**633 CSi** CH-Nr. - 12/79 145 -147 kW	**34-002292**	**24-008020**	CH.Nr.: 3385372 ->; with standard chassis; mark: 633CSi-A
B6 Sport	**633 CSi** CH-Nr. - 12/79 145 -147 kW	**34-002292**	**24-008020**	CH.Nr.: 4376794 ->; with standard chassis
B6 Sport	**633 CSi** CH-Nr. - 12/79 145 -147 kW	**34-002292**	**24-008020**	CH.Nr.: 4380054 ->; with standard chassis; mark: 633 CSI- RL
B6 Sport	**633 CSi** CH-Nr. - 12/79 145 -147 kW	**34-002292**	**24-008020**	CH.Nr.: 4390025 ->; with standard chassis; mark: 633 CSI- A- RL
B6 Sport	**M 635 CSi** 03/84 - 05/89 191 -211 kW	**34-002421**	**24-007252**	with standard chassis
B6 Sport	**3.5, 628 CSi, 635 CSi, 635i** 06/82 - 09/90 135 -191 kW	**34-002339**	**24-006088**	with standard chassis
BMW 6 (E63)				
B1	**630i, 635d, 645Ci, 650i** 01/04 - 190 -270 kW	**12-117260**	**12-224302**	VA: with ball bearing
B4	**630i, 635d, 645Ci, 650i** 01/04 - 190 -270 kW	i.V.	**19-220970**	with standard chassis
B6 Sport	**630i, 635d, 645Ci, 650i** 01/04 - 190 -270 kW	**35-109655**	**24-112703**	with standard chassis
B8	**630i, 635d, 645Ci, 650i** 01/04 - 190 -270 kW	**35-112716**	**24-112727**	with standard chassis
B12 PK	**630i** 09/04 - 190 -200 kW	**46-181176**		Conditions see certificates VA: lowering (expertise): 25 mm; axle load to: 980 kg HA: without ride height adjustment; lowering (expertise): 20 mm; axle load to: 1170 kg
B12 PK	**635d, 645Ci, 650i** 07/05 - 210 -270 kW	**46-181152**		Conditions see certificates VA: lowering (expertise): 30 mm; axle load to: 1070 kg HA: without ride height adjustment; lowering (expertise): 25-30 mm; axle load to: 1170 kg
B16 PSS9	**630i, 635d, 645Ci, 650i** 01/04 - 190 -270 kW	**48-123952**		with standard chassis; Conditions see certificates VA: lowering (expertise): 30-50 mm; axle load to: 1070 kg HA: lowering (expertise): 30-50 mm; axle load to: 1270 kg

BMW				
BMW 6 Convertible (E64)				
B1	**630i, 635d, 645Ci, 650i** 04/04 - 190 -270 kW	**12-117260**		VA: with ball bearing
B6 Sport	**630i, 635d, 645Ci, 650i** 04/04 - 190 -270 kW	**35-109655**	**24-112703**	with standard chassis
B8	**630i, 635d, 645Ci, 650i** 04/04 - 190 -270 kW	**35-112716**	**24-112727**	with standard chassis
B12 PK	**630i** 09/04 - 190 -200 kW	**46-181183**		Conditions see certificates VA: lowering (expertise): 25 mm; axle load to: 1070 kg HA: without ride height adjustment; lowering (expertise): 20 mm; axle load to: 1270 kg
B12 PK	**635d, 645Ci, 650i** 07/05 - 210 -270 kW	**46-181169**		Conditions see certificates VA: lowering (expertise): 30 mm; axle load to: 1100 kg HA: without ride height adjustment; lowering (expertise): 25-30 mm; axle load to: 1270 kg
B16 PSS9	**630i, 635d, 645Ci, 650i** 04/04 - 190 -270 kW	**48-123952**		Conditions see certificates VA: lowering (expertise): 30-50 mm; axle load to: 1070 kg HA: lowering (expertise): 30-50 mm; axle load to: 1270 kg
BMW 6 Convertible (F12)				
B6 Sport	**640d, 640i, 650i** 03/11 - 230 -300 kW	**24-178488** **24-178495**	**24-202961**	with standard chassis; without electronic suspension control
B8	**640d, 640i, 650i** 03/11 - 230 -300 kW	**24-178501** **24-178518**	**24-202992**	with M-technics; without electronic suspension control
BMW 6 Coupe (F13)				
B6 Sport	**640d, 640i, 650i** 06/11 - 230 -300 kW	**24-178488** **24-178495**	**24-202961**	with standard chassis; without electronic suspension control
B8	**640d, 640i, 650i** 06/11 - 230 -300 kW	**24-178501** **24-178518**	**24-202992**	with M-technics; without electronic suspension control
BMW 7 (E23)				
B3	**728, 728 i, 730, 732 i/733 i** 05/77 - 01/79 125 -145 kW	**36-159734**		with standard chassis
B3	**728 i, 732 i/733 i, 735 i** 02/79 - 01/82 135 -160 kW	**36-159734**		with standard chassis
B3	**728 i, 732 i/733 i, 735 i** 02/79 - 01/82 135 -160 kW		**36-153930**	with standard chassis; Heavy Duty Version .
B3	**728 i, 735 i** 02/82 - 08/86 135 -160 kW		**36-159697**	with standard chassis
B3	**745 i** 04/80 - 01/82 185 kW	**36-159734**	**36-153930**	with standard chassis
B3	**745 i** 02/82 - 08/86 185 kW		**36-202782**	with standard chassis
B6 Sport	**2.5, 3.4, 728 i, 735 i, 745 i** 09/81 - 08/86 110 -185 kW	**34-002315**	**24-007214**	with standard chassis
B6 Sport	**728 i, 732 i/733 i, 735 i, 745 i** 09/79 - 08/81 135 -185 kW	**34-002315**		with standard chassis
BMW 7 (E32)				
B1	**730 i,iL, 730 i,iL V8, 735 i,iL, 740 i,iL V8** 05/90 - 09/94 138 -210 kW		**12-117130**	

BMW

BMW 7 (E32)

B3	**730 i,iL, 730 i,iL V8, 735 i,iL** 09/86 - 09/94 138 -162 kW	**36-133284**	**36-129348**	with standard chassis; mark: i
B3	**730 i,iL, 730 i,iL V8** 12/86 - 09/94 138 -160 kW	**36-153978**	**36-153930**	with standard chassis; mark: iL
B3	**740 i,iL V8** 04/92 - 09/94 210 kW	**36-162062**	**36-162017**	with standard chassis
B3	**740 i,iL V8** 04/92 - 09/94 210 kW	**36-162055**	*36-153879*	with standard chassis; Heavy Duty Version .
B3	**740 i,iL V8** 04/92 - 09/94 210 kW		**36-153930**	with standard chassis; with ride height adjustment
B3	**750 i,iL V12** 09/87 - 09/94 220 kW	**36-153978**	**36-153930**	with standard chassis
B4	**730 i,iL, 735 i,iL** 09/86 - 02/88 138 -162 kW	**21-031120**	**19-028637**	without electronic suspension control; twin-tube HA: without ride height adjustment
B4	**730 i,iL, 735 i,iL** 03/88 - 07/90 138 -155 kW	**21-031137**	**19-028637**	without electronic suspension control; twin-tube HA: without ride height adjustment
B4	**730 i,iL, 735 i,iL** 03/88 - 07/90 138 -155 kW	**34-100608**		without electronic suspension control; mono-tube
B4	**730 i,iL, 735 i,iL** 08/90 - 09/94 138 -155 kW	**21-031144**	**19-028637**	without electronic suspension control; twin-tube HA: without ride height adjustment
B4	**730 i,iL, 735 i,iL** 08/90 - 09/94 138 -155 kW	**21-031144**		without electronic suspension control; mono-tube
B4	**730 i,iL V8, 740 i,iL V8** 04/92 - 09/94 160 -210 kW	**21-031144**	**19-028637**	twin-tube HA: without ride height adjustment
B4	**730 i,iL V8, 740 i,iL V8** 04/92 - 09/94 160 -210 kW	**34-031483**		mono-tube
B4	**750 i,iL V12** 09/87 - 07/90 220 kW	**21-031137**		twin-tube
B4	**750 i,iL V12** 09/87 - 07/90 220 kW	**34-100608**		mono-tube
B4	**750 i,iL V12** 08/90 - 09/94 220 kW	**21-031144**		twin-tube
B4	**750 i,iL V12** 08/90 - 09/94 220 kW	**34-031483**		mono-tube
B6 Sport	**730 i,iL, 735 i,iL, 750 i,iL V12** 09/86 - 02/88 138 -220 kW	**34-181553**	**24-011488**	with standard chassis; without electronic suspension control; without ride height adjustment
B6 Sport	**730 i,iL, 735 i,iL** 03/88 - 07/90 138 -155 kW	**34-003534**	**24-011488**	with standard chassis; without electronic suspension control; without ride height adjustment
B6 Sport	**730 i,iL, 730 i,iL V8, 735 i,iL, 740 i,iL V8, 750 i,iL V12** 08/90 - 09/94 138 -220 kW	**34-003688**	**24-011488**	with standard chassis; without electronic suspension control; without ride height adjustment
B8	**730 i,iL, 735 i,iL** 03/88 - 07/90 138 -155 kW	**34-030189**	**24-015271**	with M-technics; without electronic suspension control; without ride height adjustment
B8	**730 i,iL, 730 i,iL V8, 735 i,iL, 740 i,iL V8, 750 i,iL V12** 08/90 - 09/94 138 -220 kW	**34-181560**	**24-015271**	with M-technics; without electronic suspension control; without ride height adjustment
B12 PK	**730 i,iL, 735 i,iL** 03/88 - 07/90 138 -155 kW	**46-189448**		without electronic suspension control; Conditions see certificates; Self-levelling inactive after modification VA: lowering (expertise): 25-35 mm; axle load to: 1110 kg HA: lowering (expertise): 25-30 mm; axle load to: 1280 kg

BMW

BMW 7 (E32)

B12 PK	**730 i,iL, 730 i,iL V8, 735 i,iL** 08/90 - 09/94 138 -160 kW	**46-189455**		without electronic suspension control; Conditions see certificates; Self-levelling inactive after modification VA: lowering (expertise): 25-35 mm; axle load to: 1110 kg HA: lowering (expertise): 25-30 mm; axle load to: 1280 kg
B12 PK	**740 i,iL V8** 08/90 - 09/94 210 kW	**46-189462**		without ride height adjustment; Conditions see certificates; Self-levelling inactive after modification VA: lowering (expertise): 30 mm; axle load to: 1110 kg HA: lowering (expertise): 25 mm; axle load to: 1280 kg

BMW 7 (E38)

B1	**728 i,iL, 730 d, 730 i,iL, 735 i,iL, 740 d, 740 i,iL, 750 i,iL** 12/94 - 11/01 135 -240 kW	**12-117253**		
B3	**728 i,iL** 08/95 - 11/01 142 kW	**36-129188**	**36-129133**	with standard chassis; mark: i
B3	**728 i,iL** 08/95 - 11/01 142 kW	**36-129188**	**36-133291**	with standard chassis; mark: iL
B3	**735 i,iL** 01/96 - 11/01 173 kW	**36-129195**	**36-129133**	with standard chassis; mark: i
B3	**735 i,iL** 01/96 - 11/01 173 kW	**36-129195**	**36-133291**	with standard chassis; mark: iL
B3	**735 i,iL** 01/96 - 11/01 173 kW	**36-129195**	**36-153947**	with standard chassis; with ride height adjustment
B3	**740 i,iL** 10/94 - 11/01 210 kW	**36-129201**	**36-129133**	with standard chassis; mark: i
B3	**740 i,iL** 10/94 - 11/01 210 kW	**36-129201**	**36-133291**	with standard chassis; mark: iL
B3	**740 i,iL** 10/94 - 11/01 210 kW	**36-129201**	**36-153947**	with standard chassis; with ride height adjustment
B3	**750 i,iL** 12/94 - 11/01 240 kW	**36-133314**	**36-129133**	with standard chassis; mark: i
B3	**750 i,iL** 12/94 - 11/01 240 kW	**36-133314**	**36-133291**	with standard chassis; mark: iL
B3	**750 i,iL** 12/94 - 11/01 240 kW	**36-133314**	**36-153947**	with standard chassis; with ride height adjustment
B3	**725 tds** 04/96 - 11/01 105 kW	**36-129188**	**36-129133**	with standard chassis
B3	**725 tds, 728 i,iL, 735 i,iL, 740 i,iL, 750 i,iL** 12/94 - 11/01 105 -240 kW	**36-129126**	**36-129157**	with standard chassis; Heavy Duty Version .
B3	**725 tds, 728 i,iL** 08/95 - 11/01 105 -142 kW		**36-153947**	with standard chassis; with ride height adjustment
B4	**728i X** 11/95 - 09/01 142 kW		**19-028675**	with standard chassis; twin-tube
B4	**725 tds, 728 i,iL, 730 d, 730 i,iL, 735 i,iL, 740 d, 740 i,iL, 750 i,iL** 12/94 - 11/01 105 -240 kW	**22-045034** **22-045041**	**19-028675**	with standard chassis; twin-tube
B6 Sport	**725 tds, 728 i,iL, 730 d, 730 i,iL, 735 i,iL, 740 d, 740 i,iL, 750 i,iL** 12/94 - 11/01 105 -240 kW	**35-041696** **35-041702**	**24-021388**	with standard chassis; without EDC; without ride height adjustment
B12 PK	**730 i,iL, 740 i,iL, 750 i,iL** 10/94 - 11/01 155 -240 kW	**46-189479**		without EDC; without ride height adjustment; Conditions see certificates VA: lowering (expertise): 30 mm; axle load to: 1230 kg HA: lowering (expertise): 25 mm; axle load to: 1370 kg

BMW

BMW 7 (E38)

BMW 7 (E65, E66)

B1	**730 d, 730 i,Li, 730 Ld, 735 i,Li, 735i, 740 d, 740 i,Li, 745 d, 745 i,Li, 750 i,Li** 11/01 - 155 -270 kW	**12-224319**	**12-224302**	
B4	**3.0, 730 d, 730 i,Li, 730 Ld, 735 i,Li, 735i, 740 i,Li, 745 i,Li, 750 i,Li** 11/01 - 155 -270 kW	**22-184283** **22-184306**	**19-172743**	with standard chassis
B4	**3.0, 730 d, 730 i,Li, 730 Ld, 735 i,Li, 735i, 740 i,Li, 745 i,Li, 750 i,Li, 760, 760 i,Li** 01/03 - 155 -327 kW	**22-218919** **22-218926**	**19-218939**	with sports suspension
B4 AMC	**3.0, 730 d, 730 i,Li, 730 Ld, 735 i,Li, 735i, 740 d, 740 i,Li, 745 d, 745 i,Li, 750 i,Li, 760, 760 i,Li** 01/03 - 155 -327 kW	**22-184283** **22-184306**	**44-191825** **44-191832**	without electronic suspension control; without active stabilizer; with ride height adjustment

BMW 8 (E31)

B3	**840 Ci, 840 i, 850 Ci, 850 CSi, 850 i,Ci** 04/90 - 12/99 210 -280 kW		**36-197484**	with standard chassis; without M-technics
B3	**840 Ci, 840 i, 850 Ci, 850 CSi, 850 i,Ci** 04/90 - 12/99 210 -280 kW	**36-197491**		with standard chassis; without M-technics; Heavy Duty Version .
B6 Sport	**840 Ci, 840 i, 850 Ci, 850 CSi** 04/93 - 12/99 210 -280 kW	**34-110096**	**24-108096**	without electronic suspension control
B6 Sport	**850 i,Ci** 04/90 - 07/90 220 kW	**34-110096**	**24-108096**	without electronic suspension control; Only in connection with 31 33 1 139 436
B6 Sport	**850 i,Ci** 07/90 - 10/94 220 kW	**34-110096**	**24-108096**	without electronic suspension control
B12 PK	**840 Ci, 840 i, 850 Ci, 850 CSi** 04/93 - 12/99 210 -280 kW	**46-188106**		without electronic suspension control; Conditions see certificates VA: lowering (expertise): 25 mm; axle load to: 1150 kg HA: lowering (expertise): 15-20 mm; axle load to: 1200 kg
B12 PK	**850 i,Ci** 04/90 - 07/90 220 kW	**46-188106**		without electronic suspension control; Conditions see certificates; Only in connection with 31 33 1139 436 VA: lowering (expertise): 25 mm; axle load to: 1140 kg HA: lowering (expertise): 15-20 mm; axle load to: 1200 kg
B12 PK	**850 i,Ci** 07/90 - 10/94 220 kW	**46-188106**		without electronic suspension control; Conditions see certificates VA: lowering (expertise): 25 mm; axle load to: 1140 kg HA: lowering (expertise): 15-20 mm; axle load to: 1200 kg

BMW M1

B6 Sport	**3.5** 05/79 - 05/83 204 kW	*24-630016*		

BMW X1 (E84)

B1	**sDrive18d, sDrive18i, sDrive20d, xDrive18d, xDrive20d, xDrive23d, xDrive25i, xDrive28i** 03/09 - 100 -190 kW	**12-117260**		VA: -> 03/11
B4	**sDrive18d, sDrive18i, sDrive20d, sDrive20i** 03/09 - 100 -135 kW	**22-183873** **22-183880**	**19-183862**	
B4	**xDrive18d, xDrive20d, xDrive20i, xDrive23d, xDrive25i, xDrive28i** 03/09 - 100 -190 kW	**22-183842** **22-183859**	**19-183862**	

BMW

BMW X1 (E84)

B6 Sport	**sDrive18d, sDrive18i, sDrive20d, sDrive20i** 03/09 - 100 -135 kW	**35-171553** **35-171560**	**24-171311**	
B6 Sport	**xDrive18d, xDrive20d, xDrive20i, xDrive23d, xDrive25i, xDrive28i** 03/09 - 100 -190 kW	**35-171294** **35-171300**	**24-171311**	
B12 PK	**sDrive18d, sDrive18i, sDrive20d, sDrive20i** 03/09 - 100 -135 kW	**46-189554**		without ride height adjustment; Conditions see certificates VA: lowering (expertise): 30 mm; axle load to: 940 kg HA: lowering (expertise): 30 mm; axle load to: 1180 kg
B12 PK	**xDrive18d, xDrive20d, xDrive20i, xDrive23d, xDrive25i, xDrive28i** 03/09 - 100 -190 kW	**46-191465**		without ride height adjustment; Conditions see certificates VA: lowering (expertise): 30 mm; axle load to: 1030 kg HA: lowering (expertise): 30 mm; axle load to: 1180 kg

BMW X3 (E83)

B1	**2.0 d, 2.0 i, 2.5 i, 2.5 si, 3.0 d, 3.0 i, 3.0 sd, 3.0 si, xDrive18d, xDrive20d, xDrive20i, xDrive25i, xDrive30d, xDrive30i, xDrive35d** 01/04 - 105 -210 kW	**12-117260**		VA: with ball bearing
B4	**2.0 d, 2.0 i, 2.5 i, 2.5 si, 3.0 d, 3.0 i, 3.0 sd, 3.0 si, xDrive18d, xDrive20d, xDrive20i, xDrive25i, xDrive30d, xDrive30i, xDrive35d** 01/04 - 105 -210 kW	**22-123602** **22-123619**	**19-123622**	with standard chassis
B6 Offroad	**2.0 d, 2.0 i, 2.5 i, 2.5 si, 3.0 d, 3.0 i, 3.0 sd, 3.0 si, xDrive18d, xDrive20d, xDrive20i, xDrive25i, xDrive30d, xDrive30i, xDrive35d** 01/04 - 105 -210 kW	**35-114567** **35-114574**	**24-114585**	without pneumatic suspension
B12 PK	**2.0 d, 2.5 i, 2.5 si, 3.0 d, 3.0 i, 3.0 sd, 3.0 si, xDrive18d, xDrive20d, xDrive25i, xDrive30d, xDrive30i, xDrive35d** 01/04 - 105 -210 kW	**46-189547**		Conditions see certificates; without pneumatic suspension VA: lowering (expertise): 30-40 mm; axle load to: 1177 kg HA: lowering (expertise): 30 mm; axle load to: 1285 kg

BMW X3 (F25)

B4	**xDrive 20d, xDrive 20i, xDrive 28i, xDrive 30d, xDrive 35d, xDrive 35i** 09/10 - 135 -230 kW	**22-197672** **22-197689**	**19-197692**	with standard chassis
B4	**xDrive 20d, xDrive 20i, xDrive 28i, xDrive 30d, xDrive 35d, xDrive 35i** 09/10 - 135 -230 kW	**22-213136** **22-213143**	**19-213156**	with sports suspension
B6 Offroad	**xDrive 20d, xDrive 20i, xDrive 28i, xDrive 30d, xDrive 35d, xDrive 35i** 09/10 - 135 -230 kW	**35-197157** **35-197195**	**24-197205**	

BMW X5 (E53)

B1	**3.0 d, 3.0 d All-wheel Drive, 3.0 i** 05/00 - 135 -170 kW	**12-117260**		VA: with ball bearing
B3	**3.0 i** 05/00 - 163 -170 kW	**37-174026**	**36-174041**	with standard chassis
B3	**3.0 i** 05/00 - 163 -170 kW	**37-174033**	**36-174041**	with standard chassis; Heavy Duty Version .
B3	**3.0 d, 3.0 d All-wheel Drive, 4.4 i, 4.6 is** 05/00 - 135 -255 kW	**37-174033**	**36-174041**	with standard chassis
B4	**3.0 d, 3.0 d All-wheel Drive, 3.0 i, 4.4 i, 4.6 is, 4.8 is** 05/00 - 135 -265 kW	**22-119278** **22-119261**	**24-026529**	with standard chassis; with sports suspension; without pneumatic suspension

BMW

BMW X5 (E53)

B6 Offroad	**3.0 d, 3.0 d All-wheel Drive, 3.0 i, 4.4 i, 4.6 is, 4.8 is** 05/00 - 135 -265 kW	**35-107422** **35-107439**	**24-107440**	without pneumatic suspension
B12 PK	**3.0 i** 05/00 - 163 -170 kW	**46-189523**		Conditions see certificates; without pneumatic suspension VA: lowering (expertise): 30 mm; axle load to: 1230 kg HA: lowering (expertise): 30 mm; axle load to: 1630 kg
B12 PK	**3.0 d, 3.0 d All-wheel Drive** 05/01 - 135 -160 kW	**46-189530**		Conditions see certificates; without pneumatic suspension VA: lowering (expertise): 30 mm; axle load to: 1250 kg HA: lowering (expertise): 30 mm; axle load to: 1630 kg

BMW X5 (E70)

B4	**3.0 d, 3.0 d All-wheel Drive, 3.0 sd, 3.0 si, xDrive30d, xDrive30i, xDrive35d, xDrive35i, xDrive40d, xDrive48i, xDrive50i** 02/07 - 155 -300 kW	**19-184098**	**19-184074** **19-184081**	without 3rd seating row; without ride height adjustment
B6 Offroad	**3.0 d, 3.0 d All-wheel Drive, 3.0 sd, 3.0 si, 4.8 i, xDrive30d, xDrive30i, xDrive35d, xDrive35i, xDrive40d, xDrive48i, xDrive50i** 02/07 - 155 -300 kW	**24-143936**	**24-143943** **24-143950**	with standard chassis; without 3rd seating row; without ride height adjustment
B8	**3.0 d, 3.0 d All-wheel Drive, 3.0 sd, 3.0 si, xDrive30d, xDrive30i, xDrive35d, xDrive35i, xDrive40d, xDrive48i, xDrive50i** 02/07 - 155 -300 kW	**24-143967**	**24-143974** **24-143981**	with sports suspension; without 3rd seating row; without ride height adjustment
B12 PK	**3.0 d, 3.0 d All-wheel Drive, 3.0 sd, 3.0 si, xDrive30d, xDrive30i, xDrive35d, xDrive35i, xDrive40d** 02/07 - 155 -225 kW	**46-181220**		without ride height adjustment; without 3rd seating row; Conditions see certificates VA: lowering (expertise): 30-40 mm; axle load to: 1350 kg HA: lowering (expertise): 25 mm; axle load to: 1755 kg

BMW X6 (E71)

B4	**30d, 35d, 35i, 50i, xDrive30d, xDrive35d, xDrive35i, xDrive40d, xDrive50i** 05/08 - 155 -300 kW	**19-184098**	**19-184074** **19-184081**	without 3rd seating row; without ride height adjustment
B6 Sport	**30d, 35d, 35i, 50i, xDrive30d, xDrive35d, xDrive35i, xDrive40d, xDrive50i** 05/08 - 155 -300 kW	**24-143936**	**24-143943** **24-143950**	without 3rd seating row; without ride height adjustment
B8	**30d, 35d, 35i, 50i, xDrive30d, xDrive35d, xDrive35i, xDrive40d, xDrive50i** 05/08 - 155 -300 kW	**24-143967**	**24-143974** **24-143981**	without 3rd seating row; without ride height adjustment
B12 PK	**30d, 35d, 35i, 50i, xDrive30d, xDrive35d, xDrive35i, xDrive40d, xDrive50i** 05/08 - 155 -300 kW	**46-187987**		without ride height adjustment; without 3rd seating row; Conditions see certificates VA: lowering (expertise): 20 mm; axle load to: 1365 kg HA: lowering (expertise): 20 mm; axle load to: 1520 kg

BMW Z1

B1	**2.5** 06/88 - 06/91 125 kW	**12-117628**	**12-117109**	VA: Øi: 14 mm; Øa: 32 mm; with ball bearing HA: with gasket
B4	**2.5** 06/88 - 06/91 125 kW	**21-030505** **11-101321** SP	**19-019819**	with standard chassis VA: outside diameter strut 51 mm
B6 Sport	**2.5** 06/88 - 06/91 125 kW	**34-001363**	**24-007382**	VA: outside diameter strut 51 mm

BMW Z3

B1	**1.8, 1.9, 2.0, 2.2, 2.8, 3.0, 3.2 M, M 3.2** 10/95 - 01/03 85 -252 kW	**12-116829**	**12-117109**	VA: with ball bearing HA: with gasket

BMW				
BMW Z3				
B3	**1.8, 1.9** 10/95 - 03/99 85 -103 kW	**36-164288**	**38-164255**	with standard chassis
B3	**2.0, 2.2, 2.8, 3.0** 04/97 - 01/03 110 -170 kW	**36-164271**	**38-164248**	with standard chassis
B4	**1.8, 1.9, 2.0, 2.2, 2.8** 10/95 - 06/00 85 -141 kW	**22-158819** ↰ **22-158826** ↱	**19-158839**	with standard chassis
B6 Sport	**1.8, 1.9, 2.0, 2.2, 2.8, 3.0** 10/95 - 01/03 85 -170 kW	**35-044024** ↰ **35-044031** ↱	**24-023863**	mono-tube
B6 Sport	**1.8, 1.9, 2.0, 2.2, 2.8, 3.0** 10/95 - 01/03 85 -170 kW	*22-040091* ↰ *22-040107* ↱	**24-023863**	VA: twin-tube
B6 Sport	**3.2 M, M 3.2** 03/97 - 01/03 236 -252 kW	**35-043935** ↰ **35-043942** ↱	**24-027182**	with standard chassis
B8	**3.2 M, M 3.2** 03/97 - 01/03 236 -252 kW	**35-044048** ↰ **35-044055** ↱	**24-027304**	with sports suspension
B12 PK	**1.8, 1.9** 10/95 - 03/99 85 -103 kW	**46-189493**		Conditions see certificates VA: lowering (expertise): 30 mm; axle load to: 755 kg HA: lowering (expertise): 30 mm; axle load to: 870 kg
B12 PK	**2.0, 2.2, 2.8, 3.0** 04/97 - 01/03 110 -170 kW	**46-189509**		Conditions see certificates VA: lowering (expertise): 30 mm; axle load to: 830 kg HA: lowering (expertise): 30 mm; axle load to: 870 kg
BMW Z3 Coupe				
B1	**2.8, 3.0** 07/97 - 06/03 141 -170 kW		**12-117109**	HA: with gasket
B3	**2.8, 3.0** 07/97 - 06/03 141 -170 kW	**36-164264**	**38-164231**	with standard chassis
B4	**2.8, 3.0** 07/97 - 06/03 141 -170 kW	**22-158819** ↰ **22-158826** ↱	**19-158839**	with standard chassis
B6 Sport	**2.8, 3.0** 07/97 - 06/03 141 -170 kW	**35-044024** ↰ **35-044031** ↱	**24-028172**	
B6 Sport	**M, M 3.2** 02/98 - 06/03 236 -252 kW	**35-043935** ↰ **35-043942** ↱	**24-027182**	with standard chassis
B8	**M, M 3.2** 02/98 - 06/03 236 -252 kW	**35-044048** ↰ **35-044055** ↱	**24-027304**	with standard chassis
B12 PK	**2.8, 3.0** 07/97 - 06/03 141 -170 kW	**46-189516**		Conditions see certificates VA: lowering (expertise): 30 mm; axle load to: 830 kg HA: lowering (expertise): 30 mm; axle load to: 870 kg
BMW Z4 (E85)				
B1	**2.0 i, 2.2 i, 2.5 i, 2.5 si, 3.0 i, 3.0 si** 02/03 - 110 -195 kW		**12-117895**	
B4	**2.0 i, 2.2 i, 2.5 i, 2.5 si, 3.0 i, 3.0 si** 02/03 - 110 -195 kW	**22-164568** ↰ **22-164575** ↱	**19-158983**	with standard chassis
B6 Sport	**2.0 i, 2.2 i, 2.5 i, 2.5 si, 3.0 i, 3.0 si** 02/03 - 110 -195 kW	**35-124092** ↰ **35-124108** ↱	**24-104906**	mono-tube
B6 Sport	**2.0 i, 2.2 i, 2.5 i, 2.5 si, 3.0 i, 3.0 si** 02/03 - 110 -195 kW	*22-104885* ↰ *22-104892* ↱	**24-104906**	VA: twin-tube

BMW				
BMW Z4 (E85)				
B6 Sport	**3.2 M** 03/06 - 252 kW	**35-141662** **35-141679**	**24-141680**	
B8	**2.0 i, 2.2 i, 2.5 i, 2.5 si, 3.0 i, 3.0 si** 02/03 - 110 -195 kW	**35-124115** **35-124122**	**24-104937**	VA: mono-tube
B12 PK	**2.2 i, 2.5 i, 2.5 si, 3.0 i, 3.0 si** 02/03 - 125 -195 kW	**46-181237**		Conditions see certificates VA: lowering (expertise): 30 mm; axle load to: 790 kg HA: without ride height adjustment; lowering (expertise): 30 mm; axle load to: 860 kg
B12 PK	**3.2 M** 03/06 - 252 kW	**46-000033**		Conditions see certificates VA: lowering (expertise): 20 mm; axle load to: 855 kg HA: without ride height adjustment; lowering (expertise): 10 mm; axle load to: 935 kg
B16 PSS9	**2.0 i, 2.2 i, 2.5 i, 2.5 si, 3.0 i, 3.0 si** 02/03 - 110 -195 kW	**48-104739**		Conditions see certificates VA: lowering (expertise): 25-45 mm; axle load to: 790 kg HA: lowering (expertise): 25-45 mm; axle load to: 890 kg
B16 PSS10	**3.2 M** 03/06 - 252 kW	**48-141635**		Conditions see certificates VA: lowering (expertise): 10-30 mm; axle load to: 855 kg HA: lowering (expertise): 10-30 mm; axle load to: 935 kg
MS	**2.0 i, 2.2 i, 2.5 i, 2.5 si, 3.0 i, 3.0 si** 02/03 - 110 -195 kW	*31-633499* *31-633505*	*26-602059*	mark: VLN VA: Mechanically adjustable shock strength; Height Adjustable HA: Mechanically adjustable shock strength
BMW Z4 Coupe				
B1	**3.0 si** 03/06 - 195 kW		**12-117895**	
B4	**3.0 si** 03/06 - 195 kW	**22-164568** **22-164575**	**19-158983**	with standard chassis
B6 Sport	**3.0 si** 03/06 - 195 kW	**35-124092** **35-124108**	**24-104906**	
B6 Sport	**3.2 M** 03/06 - 252 kW	**35-141662** **35-141679**	**24-141680**	
B8	**3.0 si** 03/06 - 195 kW	**35-124115** **35-124122**	**24-104937**	VA: mono-tube
B12 PK	**3.0 si** 03/06 - 195 kW	**46-181251**		Conditions see certificates VA: lowering (expertise): 30 mm; axle load to: 790 kg HA: without ride height adjustment; lowering (expertise): 20 mm; axle load to: 890 kg
B12 PK	**3.2 M** 03/06 - 252 kW	**46-000033**		Conditions see certificates VA: lowering (expertise): 20 mm; axle load to: 855 kg HA: without ride height adjustment; lowering (expertise): 10 mm; axle load to: 935 kg
B16 PSS9	**3.0 si** 03/06 - 195 kW	**48-104739**		Conditions see certificates VA: lowering (expertise): 25-45 mm; axle load to: 790 kg HA: lowering (expertise): 25-45 mm; axle load to: 890 kg
B16 PSS10	**3.2 M** 03/06 - 252 kW	**48-141635**		Conditions see certificates VA: lowering (expertise): 10-30 mm; axle load to: 855 kg HA: lowering (expertise): 10-30 mm; axle load to: 935 kg
MS	**3.0 si** 03/06 - 195 kW	*31-633499* *31-633505*	*26-602059*	mark: VLN VA: Mechanically adjustable shock strength; Height Adjustable HA: Mechanically adjustable shock strength
BMW Z4 (E89)				
B4	**sDrive20i, sDrive23i, sDrive28i, sDrive30i, sDrive35i, sDrive35is** 09/10 - 135 -250 kW	**22-183897** **22-183903**	**19-183916**	without electronic suspension control

BMW				
BMW Z4 (E89)				
B6 Sport	**sDrive20i, sDrive23i, sDrive28i, sDrive30i, sDrive35i, sDrive35is** 09/10 - 135 -250 kW	**35-170631** **35-170648**	**24-170659**	without electronic suspension control
B8	**sDrive20i, sDrive23i, sDrive28i, sDrive30i, sDrive35i, sDrive35is** 09/10 - 135 -250 kW	**35-170662** **35-170679**	**24-170680**	without electronic suspension control
B12 PK	**sDrive20i, sDrive23i, sDrive28i, sDrive30i** 05/09 - 135 -190 kW	**46-181268**		without electronic suspension control; Conditions see certificates VA: lowering (expertise): 25 mm; axle load to: 800 kg HA: without ride height adjustment; lowering (expertise): 15 mm; axle load to: 970 kg
B12 PK	**sDrive35i, sDrive35is** 05/09 - 225 -250 kW	**46-181275**		without electronic suspension control; Conditions see certificates VA: lowering (expertise): 20 mm; axle load to: 870 kg HA: without ride height adjustment; lowering (expertise): 20 mm; axle load to: 1000 kg
B16 PSS10	**sDrive20i, sDrive23i, sDrive28i, sDrive30i, sDrive35i, sDrive35is** 09/10 - 135 -250 kW	**48-169998**		without electronic suspension control; not for: 2VF; Conditions see certificates VA: lowering (expertise): 20-40 mm HA: lowering (expertise): 20-40 mm
BMW 02 (E10)				
B3	**1600/2, 1802, 2002** 12/67 - 07/75 63 -74 kW	**36-162987**		with standard chassis; Heavy Duty Version .
B6 Sport	**1502 1.6, 1600 Ti, 1600/2, 1602, 1802, 2002, 2002 Ti, 2002 Tii, 2002 Turbo** 01/74 - 07/77 55 -125 kW	**34-000236**	**24-008037**	mark: Komfort
B6 Sport	**1502 1.6, 1600 Ti, 1600/2, 1602, 1802, 2002, 2002 Ti, 2002 Tii, 2002 Turbo** 01/74 - 07/77 55 -125 kW	**34-000250**	**24-001182**	mark: Club Sport
MS	**1502 1.6, 1600 Ti, 1600/2, 1602, 1802, 2002, 2002 Ti, 2002 Tii, 2002 Turbo** 01/74 - 07/77 55 -125 kW	*34-594520*	**24-604277**	mark: Rennen HA: charakteristic: 180/120
BMW 02 Touring (E6)				
B6 Sport	**1600, 1802, 2002, 2002 Tii** 01/71 - 07/75 63 -96 kW	**34-000236**	**24-008037**	mark: Komfort
B6 Sport	**1600, 1802, 2002, 2002 Tii** 01/71 - 07/75 63 -96 kW	**34-000250**	**24-001182**	mark: Club Sport
MS	**1600, 1802, 2002, 2002 Tii** 01/71 - 07/75 63 -96 kW	*34-594520*	**24-604277**	mark: Rennen HA: charakteristic: 180/120
BMW 02 Convertible (E10)				
B6 Sport	**1600-2, 2002** 12/67 - 07/75 63 -74 kW	**34-000236**	**24-008037**	mark: Komfort
B6 Sport	**1600-2, 2002** 12/67 - 07/75 63 -74 kW	**34-000250**	**24-001182**	mark: Club Sport
MS	**1600-2, 2002** 12/67 - 07/75 63 -74 kW	*34-594520*	**24-604277**	mark: Rennen HA: charakteristic: 180/120
BMW 1500-2000				
B6 Sport	**1500, 1500 1.6, 1600, 1800, 1800 Ti** 10/62 - 04/68 59 -96 kW	**34-632192**	**24-632133**	
B6 Sport	**2000, 2000 1.8, 2000 Ti / Tilux, 2000 Tii** 01/66 - 11/72 66 -96 kW	**34-632192**	**24-632140**	

BMW

BMW 2000-3.2 Coupe (E9)

B6 Sport	**2000 C/CA, 2000 CS** 10/65 - 06/70 74 -88 kW	**34-632192**	**24-632140**	
B6 Sport	**2.5 CS, 2800 CS, 3.0 CS, 3.0 Csi, 3.2 CSL** 01/74 - 03/76 110 -152 kW	**34-000243**	**24-008136**	VA: Øa: 51 mm

BMW 2500-3.3 (E3)

B6 Sport	**2500** 10/68 - 08/76 110 kW	**34-000243**	**24-008198**	-> CH.Nr.: 2072398 VA: Øa: 51 mm
B6 Sport	**2500** 09/76 - 04/77 110 kW	**34-003268**	**24-008198**	CH.Nr.: 2072399 -> VA: Øa: 48 mm
B6 Sport	**2500** 10/68 - 08/76 110 kW	**34-000243**	**24-008198**	-> CH.Nr.: 2431043; mark: 2500RL VA: Øa: 51 mm
B6 Sport	**2500** 09/76 - 04/77 110 kW	**34-003268**	**24-008198**	CH.Nr.: 2431044 ->; mark: 2500RL VA: Øa: 48 mm
B6 Sport	**2500** 10/68 - 08/76 110 kW	**34-000243**	**24-008198**	-> CH.Nr.: 2453394; mark: 2500A VA: Øa: 51 mm
B6 Sport	**2500** 09/76 - 04/77 110 kW	**34-003268**	**24-008198**	CH.Nr.: 2453395 ->; mark: 2500A VA: Øa: 48 mm
B6 Sport	**2500** 10/68 - 08/76 110 kW	**34-000243**	**24-008198**	-> CH.Nr.: 2471068; mark: 2500 A-RL VA: Øa: 51 mm
B6 Sport	**2500** 09/76 - 04/77 110 kW	**34-003268**	**24-008198**	CH.Nr.: 2471069 ->; mark: 2500 A-RL VA: Øa: 48 mm
B6 Sport	**2.8 L** 02/75 - 08/76 125 kW	**34-000243**	**24-008198**	-> CH.Nr.: 3032933 VA: Øa: 51 mm
B6 Sport	**2.8 L** 09/76 - 04/77 125 kW	**34-003268**	**24-008198**	CH.Nr.: 3032934 -> VA: Øa: 48 mm
B6 Sport	**2.8 L** 02/75 - 08/76 125 kW	**34-000243**	**24-008198**	-> CH.Nr.: 3041376; mark: 2.8 L-A VA: Øa: 51 mm
B6 Sport	**2.8 L** 09/76 - 04/77 125 kW	**34-003268**	**24-008198**	CH.Nr.: 3041377 ->; mark: 2.8 L-A VA: Øa: 48 mm
B6 Sport	**3.0 S** 05/71 - 08/76 132 kW	**34-000243**	**24-008198**	-> CH.Nr.: 3025744 VA: Øa: 51 mm
B6 Sport	**3.0 S** 09/76 - 04/77 132 kW	**34-003268**	**24-008198**	CH.Nr.: 3025745 -> VA: Øa: 48 mm
B6 Sport	**3.0 L** 02/75 - 08/76 132 kW	**34-000243**	**24-008198**	-> CH.Nr.: 3052295 VA: Øa: 51 mm
B6 Sport	**3.0 L** 09/76 - 04/77 132 kW	**34-003268**	**24-008198**	CH.Nr.: 3052296 -> VA: Øa: 48 mm
B6 Sport	**3.0 L** 02/75 - 08/76 132 kW	**34-000243**	**24-008198**	-> CH.Nr.: 3061613; mark: 3.0 L-A VA: Øa: 51 mm
B6 Sport	**3.0 L** 09/76 - 04/77 132 kW	**34-003268**	**24-008198**	CH.Nr.: 3061614 ->; mark: 3.0 L-A VA: Øa: 48 mm
B6 Sport	**3.0 L** 02/75 - 08/76 132 kW	**34-000243**	**24-008198**	-> CH.Nr.: 3075742; mark: 3.0 L-A-RL VA: Øa: 51 mm
B6 Sport	**3.0 L** 09/76 - 04/77 132 kW	**34-003268**	**24-008198**	CH.Nr.: 3075743 ->; mark: 3.0 L-A-RL VA: Øa: 48 mm
B6 Sport	**3.0 Si** 07/71 - 08/76 143 -147 kW	**34-000243**	**24-008198**	-> CH.Nr.: 3225207 VA: Øa: 51 mm

BMW

BMW 2500-3.3 (E3)

B6 Sport	**3.0 Si** 09/76 - 04/77	143 kW	**34-003268**	**24-008198**	CH.Nr.: 3225208 ->; VA: Øa: 48 mm
B6 Sport	**3.0 Si** 07/71 - 08/76	143 -147 kW	**34-000243**	**24-008198**	-> CH.Nr.: 3271251; mark: 3.0 Si-RL; VA: Øa: 51 mm
B6 Sport	**3.0 Si** 09/76 - 04/77	143 kW	**34-003268**	**24-008198**	CH.Nr.: 3271252 ->; mark: 3.0 Si-RL; VA: Øa: 48 mm
B6 Sport	**3.0 Si** 07/71 - 08/76	143 -147 kW	**34-000243**	**24-008198**	-> CH.Nr.: 3230468; mark: 3.0 Si-A; VA: Øa: 51 mm
B6 Sport	**3.0 Si** 09/76 - 04/77	143 kW	**34-003268**	**24-008198**	CH.Nr.: 3230469 ->; mark: 3.0 Si-A; VA: Øa: 48 mm
B6 Sport	**3.3 L** 01/74 - 08/76	140 kW	**34-000243**	**24-008198**	-> CH.Nr.: 3080409; VA: Øa: 51 mm
B6 Sport	**3.3 L** CH-Nr. - 09/76	140 kW	**34-003268**	**24-008198**	CH.Nr.: 3080410 ->; VA: Øa: 48 mm
B6 Sport	**3.3 L** 01/74 - 08/76	140 kW	**34-000243**	**24-008198**	-> CH.Nr.: 3090587; mark: 3.3 L-A; VA: Øa: 51 mm
B6 Sport	**3.3 L** CH-Nr. - 09/76	140 kW	**34-003268**	**24-008198**	CH.Nr.: 3090588 ->; mark: 3.3 L-A; VA: Øa: 48 mm
B6 Sport	**3.3 L** 01/74 - 08/76	140 kW	**34-000243**	**24-008198**	-> CH.Nr.: 3070171; mark: 3.3 L-A-RL; VA: Øa: 51 mm
B6 Sport	**3.3 L** CH-Nr. - 09/76	140 kW	**34-003268**	**24-008198**	CH.Nr.: 3070172 ->; mark: 3.3 L-A-RL; VA: Øa: 48 mm

BRILLIANCE BMW

BRILLIANCE BMW 3 SERIES (E46)

B4	**2.0, 2.5** 07/03 -	105 -160 kW	**22-103093** (↰) **22-103109** (↱)	**19-103150** **11-181415** SP	with standard chassis
B4	**2.0, 2.5** 07/03 -	105 -160 kW	**22-139931** (↰) **22-139948** (↱)	**19-103150** **11-181415** SP	with M-technics
B6 Sport	**2.0, 2.5** 07/03 -	105 -160 kW	**35-115045** (↰) **35-115052** (↱)	**24-026970**	with standard chassis; VA: mono-tube
B6 a10	**2.0, 2.5** 07/03 -	105 -160 kW	**31-181884** (↰) **31-181891** (↱)	**26-181905**	
B8	**2.0, 2.5** 07/03 -	105 -160 kW	**35-115069** (↰) **35-115076** (↱)	**24-026987**	with M-technics; VA: mono-tube
B12 PK	**2.0, 2.5** 07/03 -	105 -160 kW	**46-180018**		Conditions see certificates; VA: lowering (expertise): 30 mm; axle load to: 970 kg; HA: lowering (expertise): 20-25 mm; axle load to: 1190 kg
B12 SL	**2.0, 2.5** 07/03 -	105 -160 kW	**46-180117**		Conditions see certificates; VA: lowering (expertise): 45-50 mm; axle load to: 935 kg; HA: lowering (expertise): 20-25 mm; axle load to: 1190 kg
B14	**2.0, 2.5** 07/03 -	105 -160 kW	**47-126848**		Conditions see certificates; VA: lowering (expertise): 35-50 mm; axle load to: 1000 kg; HA: lowering (expertise): 25-40 mm; axle load to: 1190 kg
B16 PSS10	**2.0, 2.5** 07/03 -	105 -160 kW	**48-126380**		Conditions see certificates; VA: lowering (expertise): 25-40 mm; axle load to: 1000 kg; HA: lowering (expertise): 35-50 mm; axle load to: 1190 kg
B16 RC	**2.0, 2.5** 07/03 -	105 -160 kW	**49-135121**		Conditions see certificates; VA: lowering (expertise): 35-50 mm; axle load to: 1000 kg; HA: lowering (expertise): 25-40 mm; axle load to: 1190 kg

BRILLIANCE BMW

BRILLIANCE BMW 3 Series (E90)

B1	**2.0, 2.5, 320i** 06/05 - 100 -160 kW	**12-117260**		VA: with ball bearing
B4	**2.0, 2.5, 320i** 06/05 - 100 -160 kW	**22-135001** **22-135018**	**19-135021**	with standard chassis
B4	**2.0, 2.5, 320i** 06/05 - 100 -160 kW	**22-135032** **22-135049**	**19-135052**	with sports suspension
B6 Sport	**2.0, 2.5, 320i** 06/05 - 100 -160 kW	**35-120377** **35-120384**	**24-120395**	with standard chassis
B6 a10	**2.0, 2.5, 320i** 06/05 - 100 -160 kW	**31-181914** **31-181921**	**26-181936**	
B8	**2.0, 2.5, 320i** 06/05 - 100 -160 kW	**35-120407** **35-120414**	**24-120425**	with M-technics
B12 PK	**2.0, 320i** 05/08 - 100 -115 kW	**46-180544**		Conditions see certificates VA: lowering (expertise): 30 mm; axle load to: 935 kg HA: without ride height adjustment; lowering (expertise): 25 mm; axle load to: 1085 kg
B12 PK	**2.5** 06/05 - 160 kW	**46-180551**		Conditions see certificates VA: lowering (expertise): 30 mm; axle load to: 1045 kg HA: without ride height adjustment; lowering (expertise): 25 mm; axle load to: 1135 kg
B12 SL	**2.0, 320i** 05/08 - 100 -115 kW	**46-180711**		Conditions see certificates VA: lowering (expertise): 45-50 mm; axle load to: 935 kg HA: without ride height adjustment; lowering (expertise): 35 mm; axle load to: 1085 kg
B12 SL	**2.5** 06/05 - 160 kW	**46-180728**		Conditions see certificates VA: lowering (expertise): 45-50 mm; axle load to: 955 kg HA: without ride height adjustment; lowering (expertise): 35 mm; axle load to: 1135 kg
B14	**2.0, 2.5, 320i** 06/05 - 100 -160 kW	**47-120471**		Conditions see certificates VA: lowering (expertise): 30-50 mm; axle load to: 1020 kg HA: lowering (expertise): 30-50 mm; axle load to: 1200 kg
B16 PSS10	**2.0, 2.5, 320i** 06/05 - 100 -160 kW	**48-131636**		Conditions see certificates VA: lowering (expertise): 30-50 mm; axle load to: 1020 kg HA: lowering (expertise): 30-50 mm; axle load to: 1200 kg
B16 RC	**2.0, 2.5, 320i** 06/05 - 100 -160 kW	**49-131543**		Conditions see certificates VA: lowering (expertise): 30-50 mm; axle load to: 1020 kg HA: lowering (expertise): 30-50 mm; axle load to: 1200 kg

BRILLIANCE BMW 5 SERIES (E60)

B1	**2.2, 2.5, 3.0, 520i, 523Li, 525Li** 10/03 - 04/10 115 -190 kW	**12-117260**		VA: with ball bearing
B4	**2.2, 2.5, 3.0, 520i, 523Li, 525Li** 10/03 - 04/10 115 -190 kW	**22-138361**	**19-138381**	with standard chassis
B6 Sport	**2.2, 2.5, 3.0, 520i, 523Li, 525Li** 10/03 - 04/10 115 -190 kW	**35-109631**	**24-109642**	without electronic suspension control; with standard chassis; without ride height adjustment
B8	**2.2, 2.5, 3.0, 520i, 523Li, 525Li** 10/03 - 04/10 115 -190 kW	**35-109655**	**24-109666**	without electronic suspension control; with sports suspension; without ride height adjustment
B12 PK	**2.2, 2.5, 3.0, 520i, 523Li, 525Li** 10/03 - 04/10 115 -190 kW	**46-181107**		without electronic suspension control; Conditions see certificates VA: lowering (expertise): 30 mm; axle load to: 990 kg HA: without ride height adjustment; lowering (expertise): 30 mm; axle load to: 1245 kg
B14	**2.2, 2.5, 3.0, 520i, 523Li, 525Li** 10/03 - 04/10 115 -190 kW	**47-111165**		without electronic suspension control; without ride height adjustment; Conditions see certificates VA: lowering (expertise): 30-50 mm; axle load to: 1070 kg HA: lowering (expertise): 30-50 mm; axle load to: 1300 kg

BRILLIANCE BMW

BRILLIANCE BMW 5 SERIES (E60)

B16 PSS10	**2.2, 2.5, 3.0, 520i, 523Li, 525Li** 10/03 - 04/10 115 -190 kW	**48-135498**		without electronic suspension control; without ride height adjustment; Conditions see certificates VA: lowering (expertise): 30-50 mm; axle load to: 1070 kg HA: lowering (expertise): 30-50 mm; axle load to: 1300 kg
B16 RC	**2.2, 2.5, 3.0, 520i, 523Li, 525Li** 10/03 - 04/10 115 -190 kW	**49-135169**		without electronic suspension control; without ride height adjustment; Conditions see certificates VA: lowering (expertise): 30-50 mm; axle load to: 1070 kg HA: lowering (expertise): 30-50 mm; axle load to: 1300 kg

BRILLIANCE BMW 5 SERIES (F18)

B4	**520Li, 523Li, 528Li, 535Li** 08/10 - 130 -225 kW	**19-193298** **19-193304**	**19-193311**	with standard chassis; without electronic suspension control
B6 Sport	**520Li, 523Li, 528Li, 535Li** 08/10 - 130 -225 kW	**24-178488** **24-178495**	**24-176255**	with standard chassis
B8	**520Li, 523Li, 528Li, 535Li** 08/10 - 130 -225 kW	**24-178501** **24-178518**		with M-technics
B16 PSS10	**520Li, 523Li, 528Li, 535Li** 08/10 - 130 -225 kW	**48-177580**		Conditions see certificates VA: lowering (expertise): 30-50 mm HA: lowering (expertise): 30-50 mm

BRILLIANCE BMW X1 (E84)

B4	**5.5 V10, sDrive18i** 03/12 - 110 -135 kW	**22-183873** **22-183880**	**19-183862**	
B4	**xDrive20i, xDrive28i** 03/12 - 135 -180 kW	**22-183842** **22-183859**	**19-183862**	
B6 Sport	**5.5 V10, sDrive18i** 03/12 - 110 -135 kW	**35-171553** **35-171560**	**24-171311**	
B6 Sport	**xDrive20i, xDrive28i** 03/12 - 135 -180 kW	**35-171294** **35-171300**	**24-171311**	
B12 PK	**5.5 V10, sDrive18i** 03/12 - 110 -135 kW	**46-189554**		without ride height adjustment; Conditions see certificates VA: lowering (expertise): 30 mm; axle load to: 940 kg HA: lowering (expertise): 30 mm; axle load to: 1180 kg
B12 PK	**xDrive20i, xDrive28i** 03/12 - 135 -180 kW	**46-191465**		without ride height adjustment; Conditions see certificates VA: lowering (expertise): 30 mm; axle load to: 1030 kg HA: lowering (expertise): 30 mm; axle load to: 1180 kg

BUICK

BUICK CENTURY Saloon

B6 Sport	**5.7 D** 01/73 - 12/81 77 kW	**24-009492**	**24-009294**	

BUICK CENTURY Saloon (A)

B6 Sport	**2.5, 2.8 Limited, 3.0, 3.8** 10/81 - 09/86 66 -103 kW	*35-132462*	**24-010191**	

BUICK CENTURY Saloon (4_69)

B6 Sport	**2.5, 3.3, 3.8, 3.8 Custom, 3.8 T-Type** 10/86 - 09/91 66 -125 kW	*35-132462*	**24-010191**	

BUICK CENTURY Saloon (4_69)

B6 Sport	**2.2, 2.2 Special, 3.1** 10/91 - 12/96 82 -130 kW	*35-132462*	**24-010191**	

BUICK

BUICK CENTURY Estate (A)

B6 Sport	**3.8 Special** 10/77 - 12/80 78 kW	**24-009492**	**24-009294**	

BUICK CENTURY Estate (A)

B6 Sport	**2.8 Custom, 3.0, 3.8** 10/81 - 09/86 82 -103 kW	*35-132462*	**24-010191**	

BUICK CENTURY Estate (4_35)

B6 Sport	**3.3, 3.8, 3.8 T-Type** 10/86 - 09/91 94 -119 kW	*35-132462*	**24-010191**	

BUICK CENTURY Estate (4_35)

B6 Sport	**2.2, 2.2 Special, 3.1, 3.1 Special** 10/91 - 12/96 82 -130 kW	*35-132462*	**24-010191**	

BUICK CENTURY Coupe (4A_)

B6 Sport	**3.8 Custom, 3.8 T-Type** 10/86 - 09/89 94 -112 kW	*35-132462*	**24-010191**	

BUICK ELECTRA

B6 Sport	**4.1, 4.3 Limited** 10/81 - 09/84 89 -92 kW	**24-011044**	**24-009294**	rear wheel drive

BUICK ELECTRA

B6 Sport	**3.0 Park Avenue, 3.8, 3.8 Park Avenue, 3.8 Park Avenue Ultra, 4.3 Park Avenue** 10/84 - 09/91 63 -168 kW	**24-011044**	**24-009294**	rear wheel drive

BUICK ELECTRA

B6 Sport	**3.8, 3.8 Park Avenue** 10/86 - 09/89 92 -112 kW	**24-011044**	**24-009294**	rear wheel drive

BUICK LA CROSSE Hatchback

B4	**2.4 VVTi** 10/04 - 125 kW	**22-168597** ← **22-168603** →	**19-118758**	CH.Nr.: 51000001 ->; with standard chassis; without IDS+ suspension
B6 Sport	**2.4 VVTi** 10/04 - 125 kW	**35-192954** ← **35-192961** →	**24-069601**	CH.Nr.: 51000001 ->; without IDS+ suspension
B8	**2.4 VVTi** 10/04 - 125 kW	**35-192978** ← **35-192985** →	**24-069618**	CH.Nr.: 51000001 ->; without IDS+ suspension

BUICK LA CROSSE Saloon

B4	**2.4 VVTi, 2.4 VVTi Hybrid, 3.0** 10/04 - 12/09 118 -131 kW	**22-168597** ← **22-168603** →	**19-118758**	CH.Nr.: 51000001 ->; with standard chassis; without IDS+ suspension
B6 Sport	**2.4 VVTi, 2.4 VVTi Hybrid, 3.0** 10/04 - 12/09 118 -131 kW	**35-192954** ← **35-192961** →	**24-069601**	CH.Nr.: 51000001 ->; without IDS+ suspension
B8	**2.4 VVTi, 2.4 VVTi Hybrid, 3.0** 10/04 - 12/09 118 -131 kW	**35-192978** ← **35-192985** →	**24-069618**	CH.Nr.: 51000001 ->; without IDS+ suspension

BUICK LE SABRE

B6 Sport	**3.8** 10/85 - 09/87 103 -123 kW	**24-011044**	**24-009294**	rear wheel drive

BUICK

BUICK LE SABRE

B6 Sport	**3.8** 10/91 - 09/95	127 kW	**24-015165**	**24-015172**	rear wheel drive

BUICK ROADMASTER Estate

B6 Sport	**5.0** 10/90 - 09/92	127 kW	**24-011044**	**24-009294**	

BUICK ROADMASTER Saloon

B6 Sport	**5.7** 10/92 - 09/96	135 -194 kW	**24-011044**	**24-009294**	rear wheel drive

BUICK SAIL Saloon

B4	**1.6** 07/02 -	68 kW	**22-040909** **11-101314** SP	**19-126395**	with standard chassis
B4	**1.6** 07/02 -	68 kW	**22-040909** **11-101314** SP	**19-019727**	with sports suspension
B6 Sport	**1.6** 07/02 -	68 kW	**35-040590**	**24-000857**	
B8	**1.6** 07/02 -	68 kW	**35-040590**	**24-000857**	
B14	**1.6** 07/02 -	68 kW	**47-080713**		Spacers required for several wheel/tyre combinations; Conditions see certificates VA: lowering (expertise): 30-50 mm; axle load to: 820 kg HA: lowering (expertise): 20-40 mm; axle load to: 700 kg
B16 PSS9	**1.6** 07/02 -	68 kW	**48-080767**		Spacers required for several wheel/tyre combinations; Conditions see certificates VA: lowering (expertise): 30-50 mm; axle load to: 820 kg HA: lowering (expertise): 20-40 mm; axle load to: 700 kg

BUICK SAIL Estate

B4	**1.6** 07/02 -	68 kW	**22-040909** **11-101314** SP	**19-126395**	with standard chassis
B4	**1.6** 07/02 -	68 kW	**22-040909** **11-101314** SP	**19-019727**	with sports suspension
B6 Sport	**1.6** 07/02 -	68 kW	**35-040590**	**24-000857**	
B8	**1.6** 07/02 -	68 kW	**35-040590**	**24-000857**	
B14	**1.6** 07/02 -	68 kW	**47-080713**		Spacers required for several wheel/tyre combinations; Conditions see certificates VA: lowering (expertise): 30-50 mm; axle load to: 820 kg HA: lowering (expertise): 20-40 mm; axle load to: 700 kg
B16 PSS9	**1.6** 07/02 -	68 kW	**48-080767**		Spacers required for several wheel/tyre combinations; Conditions see certificates VA: lowering (expertise): 30-50 mm; axle load to: 820 kg HA: lowering (expertise): 20-40 mm; axle load to: 700 kg

BUICK SKYLARK (N)

B6 Sport	**2.8** 01/80 - 12/85	86 kW	*35-132462*	**24-010191**	

Buick SGM

Buick SGM LACROSSE

B4	**2.4, 3.0** 10/04 - 07/09 125 -131 kW	**22-168597** **22-168603**	**19-118758**	CH.Nr.: 51000001 ->; with standard chassis; without IDS+ suspension
B6 Sport	**2.4, 3.0** 10/04 - 07/09 125 -131 kW	**35-192954** **35-192961**	**24-069601**	CH.Nr.: 51000001 ->; without IDS+ suspension
B8	**2.4, 3.0** 10/04 - 07/09 125 -131 kW	**35-192978** **35-192985**	**24-069618**	CH.Nr.: 51000001 ->; without IDS+ suspension

Buick SGM LACROSSE II Saloon

B4	**2.0, 2.4, 2.4 Hybrid, 3.0** 07/09 - 125 -190 kW	**22-183675** **22-183682**	**19-183664**	without FlexRide; with standard chassis
B6 Sport	**2.0, 2.4, 2.4 Hybrid, 3.0** 07/09 - 125 -190 kW	**35-167990** **35-168003**	**24-168014**	without FlexRide; with standard chassis
B8	**2.0, 2.4, 2.4 Hybrid, 3.0** 07/09 - 125 -190 kW	**35-168027** **35-168034**	**24-168045**	without FlexRide; with sports suspension

Buick SGM LACROSSE III

B4	**2.0 Turbo, 2.4, 2.4 Hybrid** 01/11 - 137 -162 kW	**22-183675** **22-183682**	**19-183664**	without FlexRide; with standard chassis
B6 Sport	**2.0 Turbo, 2.4, 2.4 Hybrid** 01/11 - 137 -162 kW	**35-167990** **35-168003**	**24-168014**	without FlexRide; with standard chassis
B8	**2.0 Turbo, 2.4, 2.4 Hybrid** 01/11 - 137 -162 kW	**35-168027** **35-168034**	**24-168045**	without FlexRide; with sports suspension

Buick SGM REGAL

B4	**2.0, 2.5, 3.0** 10/04 - 12/08 91 -126 kW	**22-168597** **22-168603**	**19-118758**	CH.Nr.: 51000001 ->; with standard chassis; without IDS+ suspension
B6 Sport	**2.0, 2.5, 3.0** 10/04 - 12/08 91 -126 kW	**35-192954** **35-192961**	**24-069601**	CH.Nr.: 51000001 ->; without IDS+ suspension
B8	**2.0, 2.5, 3.0** 10/04 - 12/08 91 -126 kW	**35-192978** **35-192985**	**24-069618**	CH.Nr.: 51000001 ->; without IDS+ suspension

Buick SGM REGAL

B4	**1.6, 2.0, 2.0 Turbo, 2.4** 12/08 - 108 -162 kW	**22-183675** **22-183682**	**19-183664**	without FlexRide; with standard chassis
B6 Sport	**1.6, 2.0, 2.0 Turbo, 2.4** 12/08 - 108 -162 kW	**35-167990** **35-168003**	**24-168014**	without FlexRide; with standard chassis
B8	**1.6, 2.0, 2.0 Turbo, 2.4** 12/08 - 108 -162 kW	**35-168027** **35-168034**	**24-168045**	without FlexRide; with sports suspension

Buick SGM SAIL

B4	**1.6** 06/01 - 02/05 68 kW	**22-040909** **11-101314** *SP*	**19-126395**	with standard chassis
B4	**1.6** 06/01 - 02/05 68 kW	**22-040909** **11-101314** *SP*	**19-019727**	with sports suspension
B6 Sport	**1.6** 06/01 - 02/05 68 kW	**35-040590**	**24-000857**	

Buick SGM

Buick SGM SAIL

B8	**1.6** 06/01 - 02/05 68 kW	**35-040590**	**24-000857**	
B14	**1.6** 06/01 - 02/05 68 kW	**47-080713**		Spacers required for several wheel/tyre combinations; Conditions see certificates VA: lowering (expertise): 30-50 mm; axle load to: 820 kg HA: lowering (expertise): 20-40 mm; axle load to: 700 kg
B16 PSS9	**1.6** 06/01 - 02/05 68 kW	**48-080767**		Spacers required for several wheel/tyre combinations; Conditions see certificates VA: lowering (expertise): 30-50 mm; axle load to: 820 kg HA: lowering (expertise): 20-40 mm; axle load to: 700 kg

Buick SGM SAIL Estate

B4	**1.6** 06/01 - 02/05 68 kW	**22-040909** **11-101314** *SP*	**19-126395**	with standard chassis
B4	**1.6** 06/01 - 02/05 68 kW	**22-040909** **11-101314** *SP*	**19-019727**	with sports suspension
B6 Sport	**1.6** 06/01 - 02/05 68 kW	**35-040590**	**24-000857**	
B8	**1.6** 06/01 - 02/05 68 kW	**35-040590**	**24-000857**	
B14	**1.6** 06/01 - 02/05 68 kW	**47-080713**		Spacers required for several wheel/tyre combinations; Conditions see certificates VA: lowering (expertise): 30-50 mm; axle load to: 820 kg HA: lowering (expertise): 20-40 mm; axle load to: 700 kg
B16 PSS9	**1.6** 06/01 - 02/05 68 kW	**48-080767**		Spacers required for several wheel/tyre combinations; Conditions see certificates VA: lowering (expertise): 30-50 mm; axle load to: 820 kg HA: lowering (expertise): 20-40 mm; axle load to: 700 kg

CADILLAC

CADILLAC BLS

B4	**1.9 D, 2.0 T, 2.0 T Flexpower, 2.8 T** 04/06 - 110 -188 kW	**22-140067** **22-140074**	**19-140087**	with standard chassis; with sports suspension
B6 Sport	**1.9 D, 2.0 T, 2.0 T Flexpower, 2.8 T** 04/06 - 110 -188 kW	**35-102502** **35-102519**	**24-102520**	
B8	**1.9 D, 2.0 T, 2.0 T Flexpower, 2.8 T** 04/06 - 110 -188 kW	**35-102533** **35-102540**	**24-102551**	

CADILLAC BLS Wagon

B4	**1.9 D, 2.0 T, 2.0 T Flexpower, 2.8 T** 12/07 - 110 -206 kW	**22-140067** **22-140074**	**19-140087**	with standard chassis; with sports suspension
B6 Sport	**1.9 D, 2.0 T, 2.0 T Flexpower, 2.8 T** 12/07 - 110 -206 kW	**35-102502** **35-102519**	**24-102520**	
B8	**1.9 D, 2.0 T, 2.0 T Flexpower, 2.8 T** 12/07 - 110 -206 kW	**35-102533** **35-102540**	**24-102551**	

CADILLAC ESCALADE

B6 Sport	**5.8** 10/98 - 190 kW	**24-024242**		mark: Komfort
B6 Offroad	**5.8** 10/98 - 190 kW	**24-104050**	**24-021791**	

CADILLAC				
CADILLAC FLEETWOOD				
B6 Sport	**5.7 D** 01/80 - 09/84 77 kW	**24-011044**	**24-009294**	rear wheel drive
CADILLAC FLEETWOOD				
B6 Sport	**5.7 Brougham** 10/81 - 09/84 77 kW	**24-011044**	**24-009294**	rear wheel drive
CADILLAC FLEETWOOD				
B6 Sport	**5.0, 5.7 D** 10/84 - 09/90 77 -127 kW	**24-011044**	**24-009294**	rear wheel drive
CATERHAM				
CATERHAM SUPER SEVEN (CF)				
B6 Sport	**1.4, 1.4 i, 1.6, 1.6 i, 1.6 Turbo, 1.7, 1.8, 1.8 16 V, 1.8 i, 1.8 VVTi Super Sport, 2.0, 2.0 i, 2.0 R400, 2.0 R500, 2.0 Rally, 2.0 Turbo, 2.0 Turbo R500, 2.3 CSR** 04/90 - 74 -223 kW	*24-018999*		
CHEVROLET				
CHEVROLET ASTRA Hatchback				
B4	**1.8, 2.0 DTi GLS, 2.0 GL, 2.0 GLS** 09/98 - 74 -100 kW	**22-053060** **22-053077** **11-101512** *SP*	**19-068756**	with standard chassis
B6 Sport	**1.8, 2.0 DTi GLS, 2.0 GL, 2.0 GLS** 09/98 - 74 -100 kW	**35-044338**	**24-027823**	
B8	**1.8, 2.0 DTi GLS, 2.0 GL, 2.0 GLS** 09/98 - 74 -100 kW	**35-044345**	**24-027830**	
B14	**1.8, 2.0 DTi GLS, 2.0 GL, 2.0 GLS** 09/98 - 74 -100 kW	**47-087484**		Conditions see certificates VA: lowering (expertise): 30-45 mm; axle load to: 885 kg HA: lowering (expertise): 25-45 mm
CHEVROLET ASTRA Saloon				
B4	**1.8, 2.0 DTi GLS, 2.0 GL, 2.0 GLS** 03/99 - 74 -100 kW	**22-053060** **22-053077** **11-101512** *SP*	**19-068756**	with standard chassis
B6 Sport	**1.8, 2.0 DTi GLS, 2.0 GL, 2.0 GLS** 03/99 - 74 -100 kW	**35-044338**	**24-027823**	
B8	**1.8, 2.0 DTi GLS, 2.0 GL, 2.0 GLS** 03/99 - 74 -100 kW	**35-044345**	**24-027830**	
B14	**1.8, 2.0 DTi GLS, 2.0 GL, 2.0 GLS** 03/99 - 74 -100 kW	**47-087484**		Conditions see certificates VA: lowering (expertise): 30-45 mm; axle load to: 885 kg HA: lowering (expertise): 25-45 mm
CHEVROLET ASTRA Estate				
B4	**2.0, 2.2** 10/99 - 08/04 94 -108 kW	**22-053060** **22-053077** **11-101512** *SP*	**19-068763**	with standard chassis; without ride height adjustment
B6 Sport	**2.0, 2.2** 10/99 - 08/04 94 -108 kW	**35-044338**	**24-027847**	without ride height adjustment

CHEVROLET				
CHEVROLET ASTRA Estate				
B8	**2.0** 10/99 - 07/02 94 kW	**35-044345**	**24-027823** OIO	without ride height adjustment
B8	**2.0** 08/02 - 07/05 100 kW	**35-044345**	**24-027823** OIO	without ride height adjustment
B8	**2.2** 08/00 - 08/04 108 kW	**35-044345**	**24-027823** OIO	without ride height adjustment
B12 PK	**2.0** 10/99 - 07/02 94 kW	**46-188953**		without ride height adjustment; Conditions see certificates VA: lowering (expertise): 30 mm; axle load to: 935 kg HA: lowering (expertise): 30 mm; axle load to: 885 kg
B12 PK	**2.0, 2.2** 10/99 - 08/04 94 -108 kW	**46-188977**		without ride height adjustment; Conditions see certificates VA: lowering (expertise): 30 mm; axle load to: 1035 kg HA: lowering (expertise): 30 mm; axle load to: 885 kg
B12 PK	**2.0** 08/02 - 07/05 100 kW	**46-188953**		without ride height adjustment; Conditions see certificates VA: lowering (expertise): 30 mm; axle load to: 935 kg HA: lowering (expertise): 30 mm; axle load to: 885 kg
B12 PK	**2.2** 08/00 - 08/04 108 kW	**46-188953**		without ride height adjustment; Conditions see certificates VA: lowering (expertise): 30 mm; axle load to: 935 kg HA: lowering (expertise): 30 mm; axle load to: 885 kg
CHEVROLET ASTRO Bus				
B6 Sport	**4.3 Luxury** 10/86 - 09/89 119 kW	**24-011044**	**24-010474** OIO	
CHEVROLET ASTRO Box				
B6 Sport	**4.3** 10/84 - 09/89 103 -119 kW	**24-011044**	**24-010474** OIO	
CHEVROLET ASTRO Bus				
B6 Sport	**4.3, 4.3 Luxury** 10/89 - 09/94 112 -119 kW	**24-011044**	**24-010474** OIO	
B6 Sport	**4.3 AWD, 4.3 Luxury AWD** 10/89 - 09/94 112 -119 kW	**24-021364** OIO	**24-010474** OIO	
CHEVROLET ASTRO Box				
B6 Sport	**4.3 AWD** 10/89 - 09/94 107 -119 kW	**24-021364** OIO	**24-010474** OIO	
B6 Sport	**4.3** 10/89 - 09/94 119 kW	**24-011044**	**24-010474** OIO	
CHEVROLET ASTRO Bus				
B6 Sport	**4.3** 10/94 - 142 kW	**24-011044**	**24-010474** OIO	
B6 Sport	**4.3 AWD** 10/94 - 142 kW	**24-021364** OIO	**24-010474** OIO	
CHEVROLET ASTRO Box				
B6 Sport	**4.3** 10/94 - 127 -142 kW	**24-011044**	**24-010474** OIO	
B6 Sport	**4.3 AWD** 10/94 - 142 kW	**24-021364** OIO	**24-010474** OIO	
CHEVROLET AVALANCHE				
B6 Offroad	**5.3, 5.3 AWD, 8.1, 8.1 AWD** 01/02 - 220 -253 kW	**24-065009** LT	24-128933 OIO	without electronic suspension control; mark: 1500

CHEVROLET			
CHEVROLET AVALANCHE			
B6 Offroad **5.3, 5.3 AWD, 8.1, 8.1 AWD** 10/00 - 01/02 220 -253 kW	**24-060813**	**24-143806**	mark: 2500
CHEVROLET AVEO Saloon			
B3 **1.2** 03/06 - 53 -62 kW	**36-215270**	**36-200955**	with standard chassis
B3 **1.4** 03/06 - 69 -74 kW	**36-200740**	**36-200955**	with standard chassis
CHEVROLET BLAZER S '82			
B6 Offroad **2.0, 2.5, 2.8, 2.8 V6, 4.3, 4.3 V6** 09/82 - 08/94 63 -119 kW	**24-014120**	**24-014137**	mark: ex. ZR2; all-wheel drive
B6 Offroad **2.0, 2.5, 2.8, 2.8 V6, 4.3, 4.3 V6** 09/82 - 08/94 63 -119 kW	**24-013079**	**24-014137**	rear wheel drive
CHEVROLET BLAZER			
B6 Offroad **5.7 AWD** 10/91 - 09/96 157 kW	**24-104050**	**24-025027**	Number of Doors: 2
CHEVROLET BLAZER '94			
B6 Sport **4.3 V6** 01/94 - 142 kW	**24-013079**	**24-014137**	with standard chassis; rear wheel drive
B6 Sport **4.3 V6** 01/94 - 142 kW		**24-018197**	with sports suspension; mark: ZR2
B6 Offroad **4.3 V6** 01/94 - 142 kW	**24-014120**	**24-014137**	with standard chassis; all-wheel drive
CHEVROLET BLAZER S10			
B6 Sport **4.3 AWD** 10/94 - 09/98 119 -127 kW		**24-018197**	mark: ZR2
B6 Offroad **2.2 AWD, 4.3 AWD** 10/94 - 09/98 90 -127 kW	**24-014120**	**24-014137**	mark: ex. ZR2; all-wheel drive
CHEVROLET BLAZER S10 Pickup			
B6 Sport **4.3 AWD** 10/94 - 08/02 142 kW	**24-014120**	**24-018197**	mark: ZR2
B6 Offroad **4.3** 10/94 - 08/02 142 kW	**24-013079**	**24-016810**	mark: ex. ZQ8 Extreme
B6 Offroad **4.3 AWD** 10/94 - 08/02 142 kW	**24-014106**	**24-016810**	mark: ZM6
CHEVROLET C1500			
B6 Offroad **5.7** 10/91 - 09/96 157 kW	**24-020336**	**24-014533**	mark: Komfort
B6 Offroad **5.7** 10/91 - 09/96 157 kW	**24-016971**	*24-016988*	mark: Heavy Duty
B6 Offroad **5.7 AWD** 10/91 - 09/96 157 kW	**24-104050**	**i.V.**	mark: 271; mark: Komfort
B6 Offroad **5.7 AWD** 10/91 - 09/96 157 kW	*24-020404*	*24-020435*	mark: OE 271 package; mark: Heavy Duty

CHEVROLET

CHEVROLET C1500

CHEVROLET C1500 Pickup

B6 Offroad	**4.3** 10/91 - 09/96 119 kW	**24-020336**	**24-014533**	mark: Komfort
B6 Offroad	**4.3** 10/91 - 09/96 119 kW	**24-016971**	*24-016988*	mark: Heavy Duty
B6 Offroad	**4.3** 10/91 - 09/96 119 kW	**24-020336**	**24-014533**	mark: 1500HD; mark: Komfort
B6 Offroad	**4.3** 10/91 - 09/96 119 kW	**24-016971**	*24-016988*	mark: 1500HD; mark: Heavy Duty
B6 Offroad	**4.3 AWD** 10/91 - 09/96 119 kW	*24-020404*	*24-020435*	mark: OE 271 package; mark: Heavy Duty

CHEVROLET C1500 Pickup

B6 Offroad	**4.3, 6.5 TDiC** 10/96 - 135 -149 kW	**24-020336**	**24-014533**	mark: Komfort; rear wheel drive
B6 Offroad	**4.3, 6.5 TDiC** 10/96 - 135 -149 kW	**24-016971**	*24-016988*	mark: Heavy Duty; rear wheel drive
B6 Offroad	**4.3, 6.5 TDiC** 10/96 - 135 -149 kW	**24-020336**	**24-014533**	mark: 1500HD; mark: Komfort; rear wheel drive
B6 Offroad	**4.3** 10/96 - 09/99 149 kW	**24-016971**	*24-016988*	mark: 1500HD; mark: Heavy Duty; rear wheel drive
B6 Offroad	**4.3, 6.5 TDiC** 10/96 - 135 -149 kW	*24-020404*	*24-020435*	mark: OE 271 package; mark: Heavy Duty; all-wheel drive

CHEVROLET C2500

B6 Offroad	**5.7** 10/91 - 09/96 157 kW	**24-020336**	**24-014533**	mark: inkl. 2500HD; mark: Komfort
B6 Offroad	**5.7** 10/91 - 09/96 157 kW	**24-016971**	*24-016988*	mark: inkl. 2500HD; mark: Heavy Duty
B6 Offroad	**5.7 AWD** 10/91 - 09/96 157 kW	**24-104050**	**24-025683**	

CHEVROLET C2500 Pickup

B6 Offroad	**4.3** 10/91 - 09/96 119 kW	**24-020336**	**24-014533**	mark: inkl. 2500HD; mark: Komfort
B6 Offroad	**4.3** 10/91 - 09/96 119 kW	**24-016971**	*24-016988*	mark: inkl. 2500HD; mark: Heavy Duty
B6 Offroad	**4.3 AWD** 10/91 - 09/96 119 kW	**24-104050**	**24-025683**	

CHEVROLET C2500 Pickup

B6 Offroad	**5.7 RC AWD, 6.5 TDiC AWD** 10/96 - 135 -186 kW	**24-104050**	**24-025683**	
B6 Offroad	**5.7 RC, 6.5 TDiC** 10/96 - 135 -190 kW	**24-020336**	**24-014533**	mark: inkl. 2500HD; mark: Komfort
B6 Offroad	**5.7 RC, 6.5 TDiC** 10/96 - 135 -190 kW	**24-016971**	*24-016988*	mark: inkl. 2500HD; mark: Heavy Duty

CHEVROLET			
CHEVROLET C3500			
B6 Offroad **6.5 TDiC** 10/93 - 09/96 135 kW	**24-020336**	**24-014533**	mark: Komfort
B6 Offroad **6.5 TDiC** 10/93 - 09/96 135 kW	**24-016971**	*24-016988*	mark: Heavy Duty
B6 Offroad **6.5 TDiC AWD** 10/93 - 09/96 135 kW	**24-104050**	**24-025683**	
CHEVROLET CAMARO '70			
B6 Sport **5.0** 01/70 - 12/76 110 kW	**24-029728**	**24-001564**	
B6 Sport **5.0** 01/77 - 12/81 110 kW	**24-011044**	**24-001564**	
CHEVROLET CAMARO '81 (FP_)			
B6 Sport **2.5, 2.8, 3.1 RS, 5.0, 5.0 LX, 5.0 RS, 5.0 Supercharged, 5.7 Iroc-Z** 01/82 - 09/92 66 -171 kW	*35-125228*	**24-010214**	mark: Sport
B6 Sport **2.5, 2.8, 3.1 RS, 5.0, 5.0 LX, 5.0 RS, 5.0 Supercharged, 5.7 Iroc-Z** 01/82 - 09/92 66 -171 kW	*35-125228*	**24-011211**	mark: Heavy Duty
CHEVROLET CAMARO ´92			
B6 Sport **3.4 V6, 3.8, 5.7 V8** 01/93 - 07/98 119 -205 kW	**24-024068**	**24-024075**	
CHEVROLET CAMARO Convertible			
B6 Sport **5.7** 01/93 - 09/97 207 kW	**24-024068**	**24-024075**	
CHEVROLET CAMARO ´98			
B6 Sport **3.8 V6, 5.7** 07/98 - 142 -212 kW	**24-024068**	**24-024075**	
CHEVROLET CAMARO ´98 Convertible			
B6 Sport **3.8 V6** 07/98 - 142 kW	**24-024068**	**24-024075**	
CHEVROLET CAMARO			
B16 PSS10 **3.6, 6.2** 01/11 - 232 -318 kW	**48-191845**		Only for United States of America; Without roadworthy certificate
B16 PSS10 **3.6, 6.2** 01/11 - 232 -318 kW	**48-222983**		Conditions see certificates VA: lowering (expertise): 30-50 mm HA: lowering (expertise): 30-50 mm
CHEVROLET CAMARO Convertible			
B16 PSS10 **3.6, 6.2** 01/11 - 232 -318 kW	**48-191845**		Only for United States of America; Without roadworthy certificate
B16 PSS10 **3.6, 6.2** 01/11 - 232 -318 kW	**48-222983**		Conditions see certificates VA: lowering (expertise): 30-50 mm HA: lowering (expertise): 30-50 mm
CHEVROLET CAPRICE '70			
B6 Sport **5.0** 01/70 - 12/83 112 kW	**24-011044**	**24-009294**	rear wheel drive

CHEVROLET				
CHEVROLET CAPRICE '83				
B6 Sport	**3.8, 4.3, 5.0, 5.0 Brougham, 5.7, 5.7 D** 10/81 - 09/85 77 -120 kW	**24-011044**	**24-009294**	rear wheel drive
B6 Sport	**5.7** 01/83 - 01/90 120 kW	**24-011044**	**24-009294**	
CHEVROLET CAPRICE CLASSIC Estate				
B6 Sport	**5.0** 10/82 - 09/86 110 -114 kW	**24-011044**	**24-009294**	rear wheel drive
CHEVROLET CAPRICE CLASSIC Estate				
B6 Sport	**5.0** 10/86 - 09/90 100 -104 kW	**24-011044**	**24-009294**	rear wheel drive
CHEVROLET CAPRICE CLASSIC Saloon (1BL_)				
B6 Sport	**4.3, 5.0, 5.0 Turbo, 5.7, 5.7 LS** 10/90 - 09/96 127 -194 kW	**24-015165**	**24-015172**	rear wheel drive
CHEVROLET CAPRICE CLASSIC Estate				
B6 Sport	**5.0, 5.7** 10/90 - 09/96 127 -207 kW	**24-011044**	**24-009294**	rear wheel drive
CHEVROLET COLORADO				
B6 Offroad	**3.5 LS AWD** 05/05 - 12/05 164 kW	**24-186162**	**24-186179**	mark: inkl. Z71
CHEVROLET CORSA				
B1	**1.0, 1.4 GLS, 1.6 GLS, 1.6 GS, 1.7 D** 03/94 - 07/02 44 -75 kW	**12-224197**		VA: with ball bearing
B2	**1.0, 1.4 GLS, 1.6 GLS, 1.6 GS, 1.7 D** 03/94 - 07/02 44 -75 kW	**17-104104** **11-101314** SP	**15-126405**	
B3	**1.4 GLS** 08/94 - 07/97 44 kW	**36-130337**	**38-130342**	with standard chassis
B3	**1.4 GLS** 08/94 - 07/97 44 kW	**36-130108**	**38-130403**	with standard chassis; Heavy Duty Version .
B3	**1.6 GLS, 1.6 GS** 08/94 - 07/02 68 -75 kW		**38-130403**	with standard chassis; Heavy Duty Version .
B3	**1.6 GLS, 1.6 GS** 08/94 - 07/02 68 -75 kW	**36-161447**	**38-120008**	with standard chassis
B3	**1.7 D** 08/00 - 07/02 44 kW	**36-133949**	**38-130342**	with standard chassis
B3	**1.7 D** 08/00 - 07/02 44 kW	**36-130108**	**38-130403**	with standard chassis; Heavy Duty Version .
B4	**1.0, 1.4 GLS, 1.6 GLS, 1.6 GS, 1.7 D** 03/94 - 07/02 44 -75 kW	**22-040909** **11-101314** SP	**19-126395**	with standard chassis
B4	**1.0, 1.4 GLS, 1.6 GLS, 1.6 GS, 1.7 D** 03/94 - 07/02 44 -75 kW	**22-040909** **11-101314** SP	**19-019727**	with sports suspension
B6 Sport	**1.0, 1.4 GLS, 1.6 GLS, 1.6 GS, 1.7 D** 03/94 - 07/02 44 -75 kW	**35-040590**	**24-000857**	

CHEVROLET

CHEVROLET CORSA

B8	**1.0, 1.4 GLS, 1.6 GLS, 1.6 GS, 1.7 D** 03/94 - 07/02 44 -75 kW	**35-040590**	**24-000857**	
B10	**1.0, 1.4 GLS, 1.6 GLS, 1.6 GS, 1.7 D** 03/94 - 07/02 44 -75 kW	**46-111951**		Conditions see certificates VA: lowering (expertise): 60 mm HA: lowering (expertise): 40 mm
B14	**1.0, 1.4 GLS, 1.6 GLS, 1.6 GS, 1.7 D** 03/94 - 07/02 44 -75 kW	**47-080713**		Spacers required for several wheel/tyre combinations; Conditions see certificates VA: lowering (expertise): 30-50 mm; axle load to: 820 kg HA: lowering (expertise): 20-40 mm; axle load to: 700 kg
B16 PSS9	**1.0, 1.4 GLS, 1.6 GLS, 1.6 GS, 1.7 D** 03/94 - 07/02 44 -75 kW	**48-080767**		Spacers required for several wheel/tyre combinations; Conditions see certificates VA: lowering (expertise): 30-50 mm; axle load to: 820 kg HA: lowering (expertise): 20-40 mm; axle load to: 700 kg
MS	**1.0, 1.4 GLS, 1.6 GLS, 1.6 GS, 1.7 D** 03/94 - 07/02 44 -75 kW	*35-041757*	**24-023917**	mark: Rallye VA: charakteristic: 230/80 HA: charakteristic: 200/80
MS	**1.0, 1.4 GLS, 1.6 GLS, 1.6 GS, 1.7 D** 03/94 - 07/02 44 -75 kW	**35-042136**	**24-023900**	mark: Renen Gruppe N+G VA: charakteristic: 230/80; rebound: 20 mm HA: charakteristic: 200/80; rebound: 20 mm

CHEVROLET CORSA Hatchback

B1	**1.0, 1.4 GLS, 1.6 GLS, 1.6 GS, 1.6 GSI, 1.7 D** 03/94 - 07/02 37 -80 kW	**12-224197**		VA: with ball bearing
B2	**1.0, 1.4 GLS, 1.6 GLS, 1.6 GS, 1.6 GSI, 1.7 D** 03/94 - 07/02 37 -80 kW	**17-104104** **11-101314** *SP*	**15-126405**	
B4	**1.0, 1.4 GLS, 1.6 GLS, 1.6 GS, 1.6 GSI, 1.7 D** 03/94 - 07/02 37 -80 kW	**22-040909** **11-101314** *SP*	**19-126395**	with standard chassis
B4	**1.0, 1.4 GLS, 1.6 GLS, 1.6 GS, 1.6 GSI, 1.7 D** 03/94 - 07/02 37 -80 kW	**22-040909** **11-101314** *SP*	**19-019727**	with sports suspension
B6 Sport	**1.0, 1.4 GLS, 1.6 GLS, 1.6 GS, 1.6 GSI, 1.7 D** 03/94 - 07/02 37 -80 kW	**35-040590**	**24-000857**	
B8	**1.0, 1.4 GLS, 1.6 GLS, 1.6 GS, 1.6 GSI, 1.7 D** 03/94 - 07/02 37 -80 kW	**35-040590**	**24-000857**	
B14	**1.0, 1.4 GLS, 1.6 GLS, 1.6 GS, 1.6 GSI, 1.7 D** 03/94 - 07/02 37 -80 kW	**47-080713**		Spacers required for several wheel/tyre combinations; Conditions see certificates VA: lowering (expertise): 30-50 mm; axle load to: 820 kg HA: lowering (expertise): 20-40 mm; axle load to: 700 kg
B16 PSS9	**1.0, 1.4 GLS, 1.6 GLS, 1.6 GS, 1.6 GSI, 1.7 D** 03/94 - 07/02 37 -80 kW	**48-080767**		Spacers required for several wheel/tyre combinations; Conditions see certificates VA: lowering (expertise): 30-50 mm; axle load to: 820 kg HA: lowering (expertise): 20-40 mm; axle load to: 700 kg
MS	**1.0, 1.4 GLS, 1.6 GLS, 1.6 GS, 1.6 GSI, 1.7 D** 03/94 - 07/02 37 -80 kW	*35-041757*	**24-023917**	mark: Rallye VA: charakteristic: 230/80 HA: charakteristic: 200/80
MS	**1.0, 1.4 GLS, 1.6 GLS, 1.6 GS, 1.6 GSI, 1.7 D** 03/94 - 07/02 37 -80 kW	**35-042136**	**24-023900**	mark: Renen Gruppe N+G VA: charakteristic: 230/80; rebound: 20 mm HA: charakteristic: 200/80; rebound: 20 mm

CHEVROLET CORVETTE '83 Convertible (1YY)

B6 Sport	**5.6, 5.7** 01/89 - 12/91 179 -207 kW	**20-070007**	**20-070014**	with electronic suspension control; mark: ZR1
B6 Sport	**5.6, 5.7** 01/89 - 12/94 179 -207 kW	**24-011778**	**24-011785**	mark: Z51

CHEVROLET			
CHEVROLET CORVETTE '83 Convertible (1YY)			
B6 Sport **5.6, 5.7** 01/89 - 12/96 179 -207 kW	**24-020558**		mark: Z51 convertible
B6 Sport **5.6, 5.7** 01/92 - 12/95 179 -207 kW	**20-070274**	**20-070281**	with electronic suspension control; mark: ZR1
B6 Sport **5.6, 5.7** 01/89 - 12/96 179 -207 kW	**24-020534**	**24-020541**	mark: ex. Z51
B6 Sport **5.6, 5.7** 01/88 - 12/88 179 kW	**24-011310**	**24-020541**	mark: ex. Z51
B6 Sport **5.6, 5.7** 01/84 - 12/87 179 kW	**24-002288**		mark: ex. Z51
B6 Sport **5.7, 5.7 Grand Sport** 01/89 - 12/96 179 -246 kW	**24-020558**	**24-011785**	mark: Z51 convertible
CHEVROLET CORVETTE			
B6 Sport **5.7** 01/89 - 12/91 224 kW	**20-070007**	**20-070014**	mark: ZR1; mark: all W / S.Ride / FX3
B6 Sport **5.7, 5.7 Grand Sport** 01/92 - 12/95 224 -246 kW	**20-070274**	**20-070281**	with electronic suspension control; mark: ZR1
B6 Sport **5.7, 5.7 Grand Sport** 01/89 - 12/96 224 -246 kW	**24-020534**	**24-020541**	mark: ex. Z51
CHEVROLET CORVETTE ´97			
B6 Sport **5.7** 01/97 - 09/04 253 kW	**24-029773**	**24-029780**	with electronic suspension control; with standard chassis
B6 Sport **5.7** 01/97 - 09/04 253 kW	**24-029759**	**24-029766**	mark: Z51 / Z06
CHEVROLET CORVETTE ´97 Convertible			
B6 Sport **5.7** 09/97 - 09/04 253 kW	**24-029773**	**24-029780**	with standard chassis; without electronic suspension control
B6 Sport **5.7** 09/97 - 09/04 253 kW	**24-029759**	**24-029766**	mark: Z51 / Z06
CHEVROLET CORVETTE (C6)			
B6 Sport **6.0, 6.2 LS3, 6.2 ZR1, Z06 7.0** 09/04 - 298 -476 kW	**24-029773**	**24-029780**	without electronic suspension control
B6 Sport **6.0, 6.2 LS3, 6.2 ZR1, Z06 7.0** 09/04 - 298 -476 kW	**24-029759**	**24-029766**	without electronic suspension control; mark: Heavy Duty
MS MDS **6.0, 6.2 LS3, 6.2 ZR1, Z06 7.0** 09/04 - 298 -476 kW	*26-182001*	*26-182018*	mark: GT1
CHEVROLET CORVETTE Convertible (C6)			
B6 Sport **6.0, 6.2 LS3** 09/04 - 298 -321 kW	**24-029773**	**24-029780**	with standard chassis; without electronic suspension control
B6 Sport **6.0, 6.2 LS3** 09/04 - 298 -321 kW	**24-029759**	**24-029766**	mark: inkl. Z51
MS MDS **6.0, 6.2 LS3** 09/04 - 298 -321 kW	*26-182001*	*26-182018*	mark: GT1

CHEVROLET

CHEVROLET CRUZE

B4	**1.6, 1.8, 2.0 CDI** 05/09 - 80 -120 kW	**22-183644** **22-183651**	**19-183633**	with standard chassis
B6 Sport	**1.6, 1.8, 2.0 CDI** 05/09 - 80 -120 kW	**35-171669** **35-171676**	**24-171687**	with standard chassis
B8	**1.6, 1.8, 2.0 CDI** 05/09 - 80 -120 kW	**35-171690** **35-171706**	**24-171717**	without IDS+ suspension; with sports suspension
B14	**1.6, 1.8, 2.0 CDI** 05/09 - 80 -120 kW	**47-171725**		Conditions see certificates VA: lowering (expertise): 30-50 mm; axle load to: 1220 kg HA: lowering (expertise): 20-40 mm; axle load to: 1020 kg

CHEVROLET CRUZE Hatchback

B4	**1.6, 1.8, 2.0 CDI** 06/11 - 91 -120 kW	**22-183644** **22-183651**	**19-183633**	
B6 Sport	**1.6, 1.8, 2.0 CDI** 06/11 - 91 -120 kW	**35-171669** **35-171676**	**24-171687**	with standard chassis
B8	**1.6, 1.8, 2.0 CDI** 06/11 - 91 -120 kW	**35-171690** **35-171706**	**24-171717**	without IDS+ suspension; with sports suspension
B14	**1.6, 1.8, 2.0 CDI** 06/11 - 91 -120 kW	**47-171725**		Conditions see certificates VA: lowering (expertise): 30-50 mm; axle load to: 1220 kg HA: lowering (expertise): 20-40 mm; axle load to: 1020 kg

CHEVROLET EVANDA

B3	**2.0** 03/05 - 96 kW	**36-217847**	**36-217502**	with standard chassis; manual transmission
B3	**2.0** 03/05 - 96 kW	**36-217519**	**36-217502**	with standard chassis; automatic transmission

CHEVROLET EXPRESS Box

B6 Sport	**4.3** 10/95 - 09/98 142 kW	**24-025652**	**24-024815**	To Payload 3300 kg; mark: 1500/2500 HA: To Payload 3300 kg
B6 Sport	**4.3** 10/95 - 09/98 142 kW	**24-025652**	**24-025706**	From Payload 3300 kg; mark: 2500/3500; mark: ex. Motorhome HA: From Payload 3300 kg

CHEVROLET G20 CHEVY Box (G)

B6 Sport	**5.0 AWD, 5.7 AWD** 10/87 - 12/93 110 -145 kW	**24-010252**	**24-010269**	Tyres: for single tyres

CHEVROLET G20 CHEVY Box (G)

B6 Sport	**5.7 AWD, 6.5 D, 7.4** 01/94 - 135 -176 kW	**24-010252**	**24-010269**	Tyres: for single tyres

CHEVROLET G30 Chevy Box

B6 Sport	**6.6 Extended AWD** 10/89 - 09/94 116 kW	**24-010252**	**24-010269**	Tyres: for single tyres
B6 Sport	**6.6 Extended AWD** 10/89 - 09/94 116 kW	**24-010252**	**24-011419**	Tyres: with dual tyres

CHEVROLET KALOS

B3	**1.2** 03/05 - 12/05 53 kW	**36-216581**	**36-215300**	-> CH.Nr.: 602984; with standard chassis

CHEVROLET				
CHEVROLET KALOS				
B3	**1.2** 01/06 - 53 kW	**36-215270**	**36-200955**	CH.Nr.: 602985 ->; with standard chassis
B3	**1.4, 1.4 16V** 03/05 - 12/05 61 -69 kW	**36-200740**	**36-215300**	-> CH.Nr.: 602984; with standard chassis
B3	**1.4, 1.4 16V** 01/06 - 61 -69 kW	**36-200740**	**36-200955**	CH.Nr.: 602985 ->; with standard chassis
B4	**1.2, 1.4, 1.4 16V** 03/05 - 53 -69 kW	i.V. i.V.	**19-169262**	
CHEVROLET KALOS Saloon				
B3	**1.2** 03/05 - 12/05 53 kW	36-216581	**36-215300**	-> CH.Nr.: 602984; with standard chassis
B3	**1.2** 01/06 - 53 kW	**36-215270**	**36-200955**	CH.Nr.: 602985 ->; with standard chassis
B3	**1.4, 1.4 16V** 03/05 - 12/05 61 -69 kW	**36-200740**	**36-215300**	-> CH.Nr.: 602984; with standard chassis
B3	**1.4, 1.4 16V** 01/06 - 61 -69 kW	**36-200740**	**36-200955**	CH.Nr.: 602985 ->; with standard chassis
B4	**1.2, 1.4, 1.4 16V** 03/05 - 53 -69 kW	i.V. i.V.	**19-169262**	
CHEVROLET LACETTI				
B3	**1.4 16V, 1.6** 03/05 - 70 -80 kW	36-216598	36-216642	with standard chassis
B3	**1.8** 03/05 - 89 -90 kW	36-216604	36-216642	with standard chassis; manual transmission
B3	**1.8** 03/05 - 89 -90 kW	36-216611	36-216642	with standard chassis; automatic transmission
B3	**2.0 D** 01/07 - 89 kW	36-216628	36-216659	with standard chassis; manual transmission
B3	**2.0 D** 01/07 - 89 kW	36-216635	36-216659	with standard chassis; automatic transmission
CHEVROLET LUMINA APV				
B6 Sport	**2.3, 3.1, 3.4, 3.8** 10/91 - 07/96 90 -134 kW	*35-132462*	**24-010191**	mark: APV
CHEVROLET MALIBU '69				
B6 Sport	**3.7, 5.0** 01/73 - 12/83 81 -110 kW	**24-009492**	**24-009294**	
CHEVROLET MATIZ				
B3	**0.8, 1.0** 03/05 - 38 -49 kW	**36-215249**	**36-215256**	with standard chassis
B4	**0.8, 1.0** 03/05 - 38 -49 kW		**19-194523**	
CHEVROLET MERIVA				
B3	**1.4 Flex, 1.8, 1.8 Flex, 1.8 GLS Ethanol** 03/03 - 73 -84 kW	**36-199860**	**36-202140**	with standard chassis

CHEVROLET

CHEVROLET MERIVA

B4	**1.4 Flex, 1.8, 1.8 Flex, 1.8 GLS Ethanol** 03/03 - 73 -84 kW	**22-110442** **22-110459**	**19-115351**	
B6 Sport	**1.4 Flex, 1.8, 1.8 Flex, 1.8 GLS Ethanol** 03/03 - 73 -84 kW	**35-141068** **35-141075**	**19-148519**	
B8	**1.4 Flex, 1.8, 1.8 Flex, 1.8 GLS Ethanol** 03/03 - 73 -84 kW	**35-141099** **35-141105**	**19-148519**	

CHEVROLET MONTE CARLO

B6 Sport	**3.8** 01/73 - 12/88 83 kW	**24-009492**	**24-009294**	

CHEVROLET NIVA

B4	**1.7 4x4** 01/10 - 61 kW	**19-135069**	**19-135076**	

CHEVROLET NUBIRA Saloon

B3	**1.4, 1.5, 1.6** 01/05 - 69 -80 kW	**36-216598**	**36-216673**	with standard chassis
B3	**1.8** 03/05 - 89 -90 kW	**36-216604**	**36-216673**	with standard chassis; manual transmission
B3	**1.8** 03/05 - 90 kW	**36-216611**	**36-216673**	with standard chassis; automatic transmission
B3	**2.0, 2.0 D** 01/05 - 88 -89 kW	**36-216628**	**36-216659**	with standard chassis; manual transmission
B3	**2.0, 2.0 D** 01/05 - 88 -89 kW	**36-216635**	**36-216659**	with standard chassis; automatic transmission

CHEVROLET NUBIRA Estate

B3	**1.5, 1.6, 1.8** 01/05 - 78 -90 kW	**36-216666**	**36-216680**	with standard chassis; manual transmission
B3	**1.6, 1.8** 03/05 - 80 -90 kW	**36-215195**	**36-216680**	with standard chassis; automatic transmission
B3	**2.0, 2.0 D** 01/05 - 88 -89 kW	**36-216628**	**36-216697**	with standard chassis; manual transmission
B3	**2.0, 2.0 D** 01/05 - 88 -89 kW	**36-216635**	**36-216697**	with standard chassis; automatic transmission

CHEVROLET REZZO

B3	**1.6, 2.0** 03/05 - 77 -90 kW	**36-217472**	**36-217496**	with standard chassis

CHEVROLET S10 Pick Up

B6 Offroad	**2.2 D AWD, 2.8 AWD, 4.3 AWD** 10/83 - 09/91 68 -119 kW	**24-014106**	**24-016810**	mark: ZM6

CHEVROLET S10 Pick Up

B6 Offroad	**2.2, 2.5 TDCi** 10/94 - 05/05 84 -90 kW	**24-013079**	**24-016810**	mark: ex. ZQ8 Extreme
B6 Offroad	**2.2 AWD, 4.3 AWD** 10/94 - 09/98 90 -127 kW	**24-014106**	**24-016810**	mark: ZM6

CHEVROLET

CHEVROLET S10 Pick Up

B6 Offroad	**4.3 AWD** 10/94 - 09/95 119 kW	**24-014120** OIO	**24-018197** O	mark: ZR2

CHEVROLET SILVERADO Pickup

B6 Offroad	**4.3 1500** 10/99 - 147 kW	**24-029063**	**24-029070** OIO	mark: Komfort
B6 Offroad	**4.3 1500** 10/99 - 147 kW	**24-029025**		mark: Heavy Duty
B6 Offroad	**4.3 1500 All-wheel Drive** 10/99 - 147 kW	**24-065009** HF	**24-029056** OIO	
B6 Offroad	**5.3 LT 1500 Extended All-wheel Drive, 6.6 TDi 2500 All-wheel Drive** 10/99 - 201 -224 kW	**24-060813** OIO	**24-060820** OIO	
B6 Offroad	**6.6 TDi 2500** 10/01 - 224 kW	**24-060813** OIO	**24-060820** OIO	VA: with torsion bar suspension

CHEVROLET SPARK

B4	**0.8, 1.0** 09/00 - 03/05 38 -47 kW	**22-050120** **22-050137**	**19-065045** OIO	

CHEVROLET SPARK

B3	**0.8, 1.0 SX** 05/05 - 37 -46 kW	**36-215249**	**36-215256**	with standard chassis

CHEVROLET SUBURBAN

B6 Offroad	**5.7 D, 5.7 Tailgate** 10/78 - 09/84 78 -123 kW		**24-009331** XIO	rear wheel drive
B6 Offroad	**5.7 D, 5.7 Tailgate** 10/78 - 09/84 78 -123 kW	**24-009232** OIO	**24-009331** XIO	all-wheel drive

CHEVROLET SUBURBAN

B6 Offroad	**5.7 Extra Long** 10/84 - 09/89 123 -138 kW		**24-009331** XIO	
B6 Offroad	**5.7 Extra Long AWD, 7.4 AWD** 10/84 - 09/91 136 -170 kW	**24-009232** OIO	**24-009331** XIO	

CHEVROLET SUBURBAN

B6 Sport	**5.7 AWD, 6.5 D AWD, 7.4 AWD** 10/91 - 09/96 135 -170 kW	**24-020411** OIO	**24-020428** O	mark: 1500; mark: Sport
B6 Sport	**5.7 AWD, 6.5 D AWD, 7.4 AWD** 10/91 - 09/96 135 -170 kW	**24-104050** OIO	**24-024051** O	mark: 2500; mark: Sport
B6 Offroad	**5.7, 6.5 D** 10/91 - 09/96 135 -157 kW	**24-024167**	**24-024174** O	mark: Komfort; mark: 1500
B6 Offroad	**5.7, 6.5 D** 10/91 - 09/96 135 -157 kW	**24-022477**	**24-022484** OIO	mark: Heavy Duty; mark: 1500
B6 Offroad	**5.7, 6.5 D** 10/91 - 09/96 135 -157 kW	**24-024228**	**24-024235** O	mark: 2500
B6 Offroad	**5.7 AWD, 6.5 D AWD, 7.4 AWD** 10/91 - 09/96 135 -170 kW	**24-104050** OIO	*24-024211* O	mark: 1500
B6 Offroad	**5.7 AWD, 6.5 D AWD, 7.4 AWD** 10/91 - 09/96 135 -170 kW	**24-024181** OIO	**24-024198** O	mark: 2500

CHEVROLET

CHEVROLET SUBURBAN

CHEVROLET SUBURBAN

B6 Sport	**5.7 AWD** 10/96 - 04/00 190 kW	**24-020411**	**24-020428**	mark: 1500; mark: Sport
B6 Sport	**5.7 AWD** 10/96 - 04/00 190 kW	**24-104050**	**24-024051**	mark: 2500; mark: Sport
B6 Offroad	**5.7 AWD** 10/96 - 04/00 190 kW	**24-104050**	*24-024211*	mark: 1500
B6 Offroad	**5.7 AWD** 10/96 - 04/00 190 kW	**24-024181**	**24-024198**	mark: 2500

CHEVROLET SUBURBAN

B6 Offroad	**5.3, 5.3 AWD** 05/00 - 06/06 209 kW	**24-065009**	**24-143806**	without electronic suspension control; mark: 1500
B6 Offroad	**5.3, 5.3 AWD, 8.1 2500 LS AWD** 05/00 - 06/06 209 -254 kW	**24-060813**	**24-143806**	without electronic suspension control; mark: 2500 VA: with torsion bar suspension

CHEVROLET TAHOE

B6 Offroad	**5.7 AWD, 6.5 TDiC AWD** 10/94 - 09/96 135 -147 kW	**24-104050**	**24-025027**	Number of Doors: 2
B6 Offroad	**6.5 TDiC** 10/94 - 09/96 135 kW	*24-026703*	*24-026727*	Number of Doors: 4
B6 Offroad	**6.5 TDiC AWD** 10/94 - 09/96 135 kW	*24-020404*	**24-021791**	mark: Heavy Duty; Number of Doors: 4
B6 Offroad	**6.5 TDiC AWD** 10/94 - 09/96 135 kW	**24-024129**	**24-024136**	mark: Komfort; Number of Doors: 4

CHEVROLET TAHOE (B2W)

B6 Offroad	**4.1 AWD, 4.2 TDi AWD, 4.8, 4.8 V8, 5.3, 5.3 AWD, 5.3 V8, 6.0 V8** 12/99 - 10/06 103 -224 kW	**24-065009**	**24-143806**	without electronic suspension control; Long Wheelbase

CHEVROLET TRAILBLAZER (KC_)

B6 Offroad	**4.2, 4.2 AWD, 5.3 LT AWD, 6.0 AWD** 09/01 - 201 -295 kW	*24-103336*	**24-103343**	HA: with air suspension
B6 Offroad	**4.2, 4.2 AWD, 5.3 LT AWD, 6.0 AWD** 09/01 - 201 -295 kW	*24-103336*	*24-103350*	HA: without pneumatic suspension

CHEVROLET VECTRA

B6 Sport	**1.6, 2.0, 2.2, 2.2 GLS, 3.2 GLX** 03/96 - 55 -155 kW	**35-164432** **35-164449**	**24-025515**	with standard chassis; with off-road suspension HA: without ride height adjustment
B8	**1.6, 2.0, 2.2, 2.2 GLS, 3.2 GLX** 03/96 - 55 -155 kW	**35-164456** **35-164463**	**24-025515**	with sports suspension HA: without ride height adjustment

CHEVROLET ZAFIRA (F75)

B1	**2.0, 2.0 GL, 2.0 GLS, 2.2** 04/01 - 85 -100 kW	**12-117376**		VA: Hard Version; without ball bearing
B4	**2.0, 2.0 GL, 2.0 GLS, 2.2** 04/01 - 85 -100 kW	**22-106605** **22-106612**	**19-106625**	

CHEVROLET				
CHEVROLET ZAFIRA (F75)				
B6 Sport	**2.0, 2.0 GL, 2.0 GLS, 2.2** 04/01 - 85 -100 kW	**35-045984**	**24-029896**	
B8	**2.0, 2.0 GL, 2.0 GLS, 2.2** 04/01 - 85 -100 kW	**35-045991**	**24-029902**	
CHEVROLET ZAFIRA				
B4	**2.2** 07/05 - 110 kW	**22-141590** **22-141606**	**19-141626**	without electronic suspension control; without IDS+ suspension
B6 Sport	**2.2** 07/05 - 110 kW	**35-114635** **35-114642**	**24-118576**	without IDS+ suspension; without electronic suspension control
B12 PK	**2.2** 07/05 - 110 kW	**46-194244**		without IDS+ suspension; without electronic suspension control; Conditions see certificates VA: lowering (expertise): 30 mm; axle load to: 1155 kg HA: lowering (expertise): 30-35 mm; axle load to: 1230 kg
SGM CHEVROLET				
SGM CHEVROLET CRUZE				
B4	**1.6, 1.6 T, 1.8** 04/09 - 86 -135 kW	**22-183644** **22-183651**	**19-183633**	
B6 Sport	**1.6, 1.6 T, 1.8** 04/09 - 86 -135 kW	**35-171669** **35-171676**	**24-171687**	with standard chassis
B8	**1.6, 1.6 T, 1.8** 04/09 - 86 -135 kW	**35-171690** **35-171706**	**24-171717**	without IDS+ suspension; with sports suspension
B14	**1.6, 1.6 T, 1.8** 04/09 - 86 -135 kW	**47-171725**		Conditions see certificates VA: lowering (expertise): 30-50 mm; axle load to: 1220 kg HA: lowering (expertise): 20-40 mm; axle load to: 1020 kg
CHRYSLER				
CHRYSLER CROSSFIRE				
B6 Sport	**3.2, SRT-6** 07/03 - 160 -246 kW	**24-109987**	**24-109994**	
B8	**3.2, SRT-6** 07/03 - 160 -246 kW	**24-109987**	**24-110013**	
B12 PK	**3.2** 07/03 - 160 kW	**46-000682**		Conditions see certificates VA: lowering (expertise): 30 mm; axle load to: 845 kg HA: without ride height adjustment; lowering (expertise): 30 mm; axle load to: 820 kg
B14	**3.2, SRT-6** 07/03 - 160 -246 kW	**47-119536**		Conditions see certificates VA: lowering (expertise): 15-35 mm; axle load to: 905 kg HA: lowering (expertise): 10-30 mm; axle load to: 850 kg
B16 PSS9	**3.2, SRT-6** 07/03 - 160 -246 kW	**48-119542**		Conditions see certificates VA: lowering (expertise): 15-30 mm; axle load to: 905 kg HA: lowering (expertise): 10-30 mm; axle load to: 850 kg
CHRYSLER CROSSFIRE Roadster				
B6 Sport	**3.2, SRT-6** 05/04 - 160 -246 kW	**24-109987**	**24-109994**	
B8	**3.2, SRT-6** 05/04 - 160 -246 kW	**24-109987**	**24-110013**	

CHRYSLER

CHRYSLER CROSSFIRE Roadster

B12 PK	**3.2** 05/04 - 160 kW		**46-000682**	Conditions see certificates VA: lowering (expertise): 30 mm; axle load to: 845 kg HA: without ride height adjustment; lowering (expertise): 30 mm; axle load to: 820 kg
B14	**3.2, SRT-6** 05/04 - 160 -246 kW		**47-119536**	Conditions see certificates VA: lowering (expertise): 15-35 mm; axle load to: 905 kg HA: lowering (expertise): 10-30 mm; axle load to: 850 kg
B16 PSS9	**3.2, SRT-6** 05/04 - 160 -246 kW		**48-119542**	Conditions see certificates VA: lowering (expertise): 15-30 mm; axle load to: 905 kg HA: lowering (expertise): 10-30 mm; axle load to: 850 kg

CHRYSLER PT CRUISER (PT_)

B8	**1.6, 2.0, 2.2 CRD, 2.4, GT 2.4** 06/00 - 85 -164 kW		*24-107839*	HA: charakteristic: 90/75

CHRYSLER PT CRUISER Convertible

B8	**2.4, 2.4 GT** 03/04 - 105 -164 kW		*24-107839*	HA: charakteristic: 90/75

CHRYSLER VOYAGER I (ES)

B4	**3.0, 3.3, 2.5 i, 2.5 TD, 3.0, 3.0 i, 3.3 i, 3.3 i AWD** 10/87 - 09/95 72 -120 kW		**19-065212**	
B6 Sport	**3.0, 3.3, 2.5 i, 2.5 TD, 3.0, 3.0 i, 3.3 i, 3.3 i AWD** 10/87 - 09/95 72 -120 kW		*24-015226*	

CHRYSLER VOYAGER II (GS)

B4	**2.0 i, 2.4 i, 2.5 TD, 3.0, 3.3 i** 01/95 - 03/01 85 -116 kW	i.V.	**19-065212**	HA: with standard chassis
B6 Sport	**2.0 i, 2.4 i, 2.5 TD, 3.0, 3.3 i** 01/95 - 03/01 85 -116 kW		*24-015226*	HA: with standard chassis

CHRYSLER VOYAGER III

B4	**2.4, 2.5 CRD, 2.8 CRD, 3.3, 3.3 AWD, 3.3 Flex-Fuel, 3.8, 3.8 AWD** 02/00 - 88 -160 kW	i.V.	**19-065212**	with standard chassis

CHRYSLER 300 C

B6 Sport	**2.7, 3.0 CRD, 3.0 V6 CRD, 3.5, 5.7, 6.1 SRT8** 06/05 - 130 -317 kW	*24-144766* *24-144773*	*24-144780*	without ride height adjustment; rear wheel drive

CHRYSLER 300 C Touring

B6 Sport	**2.7, 3.0 CRD, 3.5, 5.7, 6.1 SRT8** 06/05 - 130 -317 kW	*24-144766* *24-144773*	*24-144780*	without ride height adjustment; rear wheel drive

CHRYSLER (BBDC)

CHRYSLER (BBDC) 300C

B6 Sport	**2.7, 3.5, 5.7** 10/06 - 01/12 152 -252 kW	*24-144766* *24-144773*	*24-144780*	without ride height adjustment; rear wheel drive

CITROËN				
CITROËN AX (ZA-_)				
B1	**1.3 Sport, 1.4 GTi, 10, 10 E, 11, 11 CAT, 14, 14 D, 14 GT, 15 D** 12/86 - CH-Nr. 30 -74 kW	**12-116614**		-> CH.Nr.: 50265608 VA: with ball bearing
B1	**1.3 Sport, 1.4 GTi, 10, 10 E, 11, 11 CAT, 14, 14 D, 14 GT, 15 D** CH-Nr. - 12/97 30 -74 kW	**12-116621**		CH.Nr.: 50265609 -> VA: with ball bearing
B4	**1.3 Sport, 1.4 GTi, 10, 10 E, 11, 11 CAT, 14, 14 D, 14 GT, 15 D** 12/86 - 12/97 30 -74 kW	**21-030475** **11-122449** SP	**19-019765** OIO	with standard chassis
B6 Sport	**1.3 Sport, 1.4 GTi, 10, 10 E, 11, 11 CAT, 14, 14 D, 14 GT, 15 D** 12/86 - 12/97 30 -74 kW	**34-030608**	**24-020756** OIO	
B6 Sport	**1.3 Sport, 1.4 GTi, 10, 10 E, 11, 11 CAT, 14, 14 D, 14 GT, 15 D** 12/86 - 12/97 30 -74 kW	**34-030608**	**24-012768** OIO	HA: firmer setting
B8	**1.3 Sport, 1.4 GTi, 10, 10 E, 11, 11 CAT, 14, 14 D, 14 GT, 15 D** 12/86 - 12/97 30 -74 kW	**34-030592**	**24-020756** OIO	
B8	**1.3 Sport, 1.4 GTi, 10, 10 E, 11, 11 CAT, 14, 14 D, 14 GT, 15 D** 12/86 - 12/97 30 -74 kW	**34-030592**	**24-012768** OIO	HA: firmer setting
B12 PK	**10, 10 E, 11, 11 CAT, 14, 14 D** 07/86 - 12/97 30 -62 kW	**46-189301**		Conditions see certificates VA: lowering (expertise): 25-30 mm; axle load to: 605 kg HA: axle load to: 585 kg
MS	**1.3 Sport, 1.4 GTi, 10, 10 E, 11, 11 CAT, 14, 14 D, 14 GT, 15 D** 12/86 - 12/97 30 -74 kW	**34-003510**	**24-012768** OIO	mark: Rallye Gruppe N HA: firmer setting
CITROËN BERLINGO (MF)				
B1	**1.1 i, 1.4, 1.4 bivalent, 1.4 GNC, 1.4 i, 1.4 i bivalent, 1.6, 1.6 16V, 1.6 HDi, 1.6 HDI 75, 1.6 HDI 90, 1.8 D, 1.8 i, 1.8 X, 1.9 D, 2.0 HDi, 2.0 HDI 90** 07/96 - 43 -81 kW	**12-117925**		with power steering; Engine Code: TU1JP VA: with ball bearing
B3	**1.1 i, 1.4 i** 07/96 - 12/01 44 -55 kW	**36-212514**		with standard chassis
B3	**1.1 i, 1.4 i, 1.6 16V** 07/96 - 12/01 44 -80 kW	**36-198221**		with standard chassis; with AC
B3	**1.1 i, 1.4 i** 07/96 - 12/01 44 -55 kW	**36-212514**		with standard chassis; with ABS; with power steering
B3	**1.1 i, 1.4 i** 07/96 - 12/01 44 -55 kW	**36-198153**		with standard chassis; Heavy Duty Version .
B3	**1.1 i, 1.4 i, 1.6 16V** 07/96 - 12/01 44 -80 kW	**36-198221**		with off-road suspension
B3	**1.1 i, 1.4, 1.4 bivalent, 1.4 i, 1.4 i bivalent** 01/02 - 44 -55 kW	**36-198276**		with standard chassis
B3	**1.1 i, 1.4, 1.4 bivalent, 1.4 i, 1.4 i bivalent** 01/02 - 44 -55 kW	**36-198184**		with standard chassis; with AC
B3	**1.1 i** 01/02 - 44 kW	**36-212569**		with standard chassis; Heavy Duty Version .
B3	**1.4, 1.4 bivalent, 1.4 i, 1.4 i bivalent** 01/02 - 48 -55 kW	**36-198184**		with standard chassis; Heavy Duty Version .; without AC

CITROËN

CITROËN BERLINGO (MF)

B3	**1.4 i** 07/96 - 12/01 55 kW	**36-198276**		with standard chassis; without AC; equipment: Multispace
B3	**1.4 i** 07/96 - 12/01 55 kW	**36-198184**		with standard chassis; with AC; equipment: Multispace
B3	**1.6 16V** 10/00 - 12/01 80 kW	**36-212514**		with standard chassis
B3	**1.6 16V** 10/00 - 12/01 80 kW	**36-198252**		with standard chassis; Heavy Duty Version .
B3	**1.6 16V** 10/00 - 12/01 80 kW	**36-212538**		with standard chassis; without AC; equipment: Multispace
B3	**1.6 16V, 2.0 HDI 90** 12/99 - 12/01 66 -80 kW	**36-212552**		with standard chassis; with AC; equipment: Multispace
B3	**1.6, 1.6 16V** 01/02 - 80 -81 kW	**36-198184**		with standard chassis
B3	**1.6, 1.6 16V** 01/02 - 80 -81 kW	**36-198184**		with standard chassis; Heavy Duty Version .
B3	**1.6, 1.6 16V** 01/02 - 80 -81 kW	**36-198191**		with off-road suspension
B3	**1.8 i** 05/97 - 12/01 66 kW	**36-198221**		with standard chassis
B3	**1.8 i** 05/97 - 12/01 66 kW	**36-198252**		with standard chassis; Heavy Duty Version .
B3	**1.8 i** 05/97 - 12/01 66 kW	**36-198184**		with off-road suspension
B3	**1.6 HDi, 1.6 HDI 75, 1.6 HDI 90** 01/02 - 55 -80 kW	**36-198184**		with standard chassis
B3	**1.6 HDi, 1.6 HDI 75, 1.6 HDI 90, 1.9 D** 01/02 - 50 -80 kW	**36-198368**		with standard chassis; Heavy Duty Version .
B3	**1.6 HDi, 1.6 HDI 75, 1.6 HDI 90, 1.9 D** 01/02 - 50 -80 kW	**36-198191**		with off-road suspension
B3	**1.8 D, 1.8 X** 11/96 - 12/01 43 -44 kW	**36-198221**		with standard chassis
B3	**1.8 D, 1.8 X** 11/96 - 12/01 43 -44 kW	**36-198153**		with standard chassis; Heavy Duty Version .
B3	**1.8 D, 1.8 X, 1.9 D** 07/96 - 12/01 43 -51 kW	**36-198252**		with off-road suspension
B3	**1.9 D** 07/96 - 12/01 50 -51 kW	**36-198221**		with standard chassis
B3	**1.9 D** 07/96 - 12/01 50 -51 kW	**36-198153**		with standard chassis; Heavy Duty Version .
B3	**1.9 D** 01/02 - 50 -51 kW	**36-198184**		with standard chassis
B3	**1.9 D** 01/02 - 50 -51 kW			with standard chassis; with AC
B3	**1.9 D** 01/02 - 50 -51 kW	**36-198184**		with standard chassis; with AC; with panorama sunroof
B3	**2.0 HDI 90** 12/99 - 12/01 66 kW	**36-200580**		with standard chassis

CITROËN

CITROËN BERLINGO (MF)

B3	**2.0 HDI 90** 01/02 - 66 kW	**36-198184**		with standard chassis
B3	**2.0 HDI 90** 01/02 - 66 kW	**36-198368**		with standard chassis; Heavy Duty Version .
B3	**2.0 HDI 90** 01/02 - 66 kW	**36-200580**		with off-road suspension
B3	**2.0 HDI 90** 12/99 - 12/01 66 kW	**36-212545**		with standard chassis; without AC; equipment: Multispace
B3	**2.0 HDi** 11/02 - 10/05 66 kW	**36-198184**		with standard chassis; without AC
B3	**2.0 HDi** 11/02 - 10/05 66 kW	**36-215515**		with standard chassis; Heavy Duty Version .; without AC
B3	**2.0 HDi** 11/02 - 10/05 66 kW	**36-198368**		with standard chassis; with AC
B3	**2.0 HDi** 11/02 - 10/05 66 kW	**36-200580**		with off-road suspension; with AC
B4	**1.1 i, 1.4 i, 1.6 16V, 1.8 D, 1.8 i, 1.8 X, 1.9 D, 2.0 HDI 90** 07/96 - 11/02 43 -80 kW	**22-045676** **22-045669** **11-101376** SP	**19-061047** OIO	with standard chassis; not for: Multispace; not for: Audace
B4	**1.1 i, 1.4 i, 1.6 16V, 1.8 D, 1.8 i, 1.9 D, 2.0 HDI 90** 12/02 - 43 -80 kW	**22-052964** **22-052957** **11-101376** SP	**19-061047** OIO	with standard chassis; not for: Multispace; not for: Audace
B4	**1.1 i, 1.4, 1.4 bivalent, 1.4 i, 1.4 i bivalent, 1.6, 1.6 16V, 1.6 HDi, 1.6 HDI 75, 1.6 HDI 90, 1.8 D, 1.8 i, 1.8 X, 1.9 D, 2.0 HDi, 2.0 HDI 90** 07/96 - 43 -81 kW	**22-100030** **22-100047**	**19-100050** OIO	equipment: Multispace; equipment: Audace
B4	**1.4, 1.4 bivalent, 1.4 i bivalent, 1.6, 1.6 HDi, 1.6 HDI 75, 1.6 HDI 90, 2.0 HDi** 11/02 - 48 -81 kW	**22-052964** **22-052957** **11-101376** SP	**19-061047** OIO	with standard chassis; not for: Multispace; not for: Audace

CITROËN BERLINGO Box (M_)

B1	**1.1 i, 1.4, 1.4 i, 1.6 16V, 1.8 D, 1.8 i, 1.9 D, 1.9 D 70, 2.0 HDI 90** 07/96 - 43 -80 kW	**12-117925**		with power steering VA: with ball bearing
B3	**1.1 i** 07/96 - 12/01 44 kW	**36-212514**		with standard chassis; To Payload 475 kg
B3	**1.1 i** 07/96 - 12/01 44 kW	**36-215546**		with off-road suspension; To Payload 475 kg
B3	**1.1 i, 1.4 i** 07/96 - 12/01 44 -55 kW	**36-197507**		with standard chassis; To Payload 600 kg
B3	**1.1 i, 1.4 i** 07/96 - 12/01 44 -55 kW	**36-212514**		with standard chassis; To Payload 600 kg; with ABS
B3	**1.1 i, 1.4 i** 07/96 - 12/01 44 -55 kW	**36-215546**		with standard chassis; To Payload 600 kg; with AC
B3	**1.1 i, 1.4 i** 07/96 - 12/01 44 -55 kW	**36-198221**		with off-road suspension; To Payload 600 kg
B3	**1.1 i, 1.4 i** 07/96 - 12/01 44 -55 kW	**36-198221**		with off-road suspension; To Payload 600 kg; with AC
B3	**1.1 i** 01/02 - 44 kW	**36-198184**		with standard chassis; To Payload 600 kg

CITROËN

CITROËN BERLINGO Box (M_)

B3	**1.1 i** 01/02 - 44 kW	**36-198184**		with off-road suspension; To Payload 600 kg
B3	**1.4, 1.4 bivalent, 1.4 i, 1.4 i bivalent** 01/02 - 48 -55 kW	**36-212569**		with standard chassis; To Payload 600 kg
B3	**1.4, 1.4 bivalent, 1.4 i, 1.4 i bivalent** 01/02 - 48 -55 kW	**36-212569**		with off-road suspension; To Payload 600 kg
B3	**1.4, 1.4 bivalent, 1.4 i, 1.4 i bivalent** 01/02 - 48 -55 kW	**36-198276**		with standard chassis; To Payload 600 kg; with AC
B3	**1.4, 1.4 bivalent, 1.4 i, 1.4 i bivalent** 01/02 - 48 -55 kW	**36-198184**		with off-road suspension; To Payload 600 kg; with AC
B3	**1.4, 1.4 bivalent, 1.4 i, 1.4 i bivalent** 01/02 - 48 -55 kW	36-212484		with off-road suspension; To Payload 800 kg; with AC
B3	**1.4 i** 07/96 - 12/01 55 kW	36-212484		with standard chassis; From Payload 601 kg
B3	**1.6 16V** 10/00 - 12/01 80 kW	36-212484		with standard chassis; To Payload 800 kg
B3	**1.6 HDI 75, 1.6 HDI 90** 01/02 - 55 -66 kW			with standard chassis; To Payload 800 kg
B3	**1.6 HDI 75, 1.6 HDI 90** 01/02 - 55 -66 kW	**36-198184**		with standard chassis; To Payload 800 kg; with AC
B3	**1.8 D, 1.8 i, 1.9 D, 1.9 D 70** 07/96 - 12/01 43 -66 kW	**36-198221**		with standard chassis; To Payload 600 kg
B3	**1.8 D, 1.8 i, 1.9 D, 1.9 D 70** 07/96 - 12/01 43 -66 kW	**36-198153**		with standard chassis; To Payload 600 kg; with AC
B3	**1.8 D, 1.8 i, 1.9 D, 1.9 D 70** 07/96 - 12/01 43 -66 kW	**36-198252**		with off-road suspension; To Payload 600 kg
B3	**1.8 D, 1.8 i, 1.9 D, 1.9 D 70, 2.0 HDI 90** 07/96 - 12/01 43 -66 kW	**36-211968**		with standard chassis; From Payload 601 kg
B3	**1.8 D, 1.8 i, 1.9 D, 1.9 D 70, 2.0 HDI 90** 07/96 - 12/01 43 -66 kW	36-212491		with standard chassis; From Payload 601 kg; with AC
B3	**1.8 D, 1.9 D, 1.9 D 70** 01/02 - 43 -51 kW	**36-198184**		with standard chassis; To Payload 600 kg
B3	**1.8 D, 1.9 D, 1.9 D 70** 01/02 - 43 -51 kW			with standard chassis; To Payload 600 kg; with AC
B3	**1.8 D, 1.9 D, 1.9 D 70** 01/02 - 43 -51 kW	**36-198184**		with off-road suspension; To Payload 600 kg
B3	**1.8 D, 1.9 D, 1.9 D 70** 01/02 - 43 -51 kW	**36-198191**		with off-road suspension; To Payload 600 kg; with AC
B3	**1.8 D, 1.9 D, 1.9 D 70, 2.0 HDI 90** 01/02 - 43 -66 kW	36-212484		with standard chassis; To Payload 800 kg
B3	**2.0 HDI 90** 12/99 - 12/01 66 kW	**36-198269**		with standard chassis; To Payload 600 kg
B3	**2.0 HDI 90** 12/99 - 12/01 66 kW	**36-200580**		with standard chassis; To Payload 600 kg; with AC
B3	**2.0 HDI 90** 12/99 - 12/01 66 kW	**36-200580**		with off-road suspension; To Payload 600 kg
B3	**2.0 HDI 90** 12/99 - 12/01 66 kW	**36-200580**		with off-road suspension; To Payload 600 kg; with AC

CITROËN				
CITROËN BERLINGO Box (M_)				
B3	**2.0 HDI 90** 01/02 - 66 kW	**36-198252**		with standard chassis; To Payload 600 kg
B3	**2.0 HDI 90** 01/02 - 66 kW	**36-198184**		with standard chassis; To Payload 600 kg; with AC
B4	**1.1 i, 1.4 i, 1.6 16V, 1.8 D, 1.8 i, 1.9 D, 1.9 D 70, 2.0 HDI 90** 07/96 - 11/02 43 -80 kW	**22-045676** **22-045669** **11-101376** SP	**19-061047** OIO	with standard chassis; max. load: 600 kg
B4	**1.1 i, 1.4 i, 1.6 16V, 1.8 D, 1.8 i, 1.9 D, 1.9 D 70, 2.0 HDI 90** 07/96 - 11/02 43 -80 kW	**22-045959** **22-045966** **11-101376** SP	**19-061047** OIO	with standard chassis; max. load: 800 kg
CITROËN C-CROSSER (EP_)				
B4	**2.2 HDi, 2.4 16V** 02/07 - 115 -125 kW	i.V. i.V.	**19-172682** OIO	
CITROËN C15 (VD-_)				
B2	**1.0, 1.1, 1.1 i, 1.4, 1.4 E, 1.4 i, 1.8 D, 1.9 D** 05/88 - 12/05 33 -55 kW	**17-053310** **11-101376** SP		with standard chassis
B4	**1.0, 1.1, 1.1 i, 1.4, 1.4 E, 1.4 i, 1.8 D, 1.9 D** 05/88 - 12/05 33 -55 kW	**22-040916** **11-101376** SP	i.V. OIO	with standard chassis
CITROËN C1 (PM_, PN_)				
B3	**1.0** 06/05 - 50 kW	**36-200764**	**36-200795**	with standard chassis
B3	**1.0** 06/05 - 50 kW	**36-200788**	**36-200795**	with standard chassis; Heavy Duty Version .
B3	**1.4 HDi** 06/05 - 40 kW	**36-200788**	**36-200795**	with standard chassis
B4	**1.0, 1.4 HDi** 06/05 - 40 -50 kW	**22-146809** **22-146816**	**19-147659** OIO	
CITROËN C2 (JM_)				
B1	**1.1, 1.4, 1.4 16V, 1.4 HDi, 1.6, 1.6 HDi, 1.6 VTS** 09/03 - 44 -90 kW	**12-224258**		VA: with ball bearing; To Contr.No. 10156
B1	**1.1, 1.4, 1.4 16V, 1.4 HDi, 1.6, 1.6 HDi, 1.6 VTS** 09/03 - 44 -90 kW	**12-226542**		VA: without ball bearing; From Contr.No. 10157
B3	**1.1, 1.4, 1.4 16V, 1.4 HDi, 1.6, 1.6 HDi** 09/03 - 44 -80 kW	**37-161033**	**36-161003**	with standard chassis
B3	**1.1, 1.4, 1.4 16V, 1.4 HDi, 1.6, 1.6 HDi** 09/03 - 44 -80 kW	**37-161019**	**36-164202**	with standard chassis; Heavy Duty Version .
B4	**1.1, 1.4, 1.4 16V, 1.4 HDi, 1.6, 1.6 HDi, 1.6 VTS** 09/03 - 44 -90 kW	**22-118608** **22-118615**	**19-223025** OIO	
B6 Sport	**1.1, 1.4, 1.4 16V, 1.4 HDi, 1.6, 1.6 HDi, 1.6 VTS** 09/03 - 44 -90 kW	**35-140795** **35-140801**	**24-140812** OIO	with standard chassis
B12 PK	**1.1, 1.4, 1.4 16V, 1.4 HDi, 1.6, 1.6 VTS** 09/03 - 44 -90 kW	**46-189363**		Conditions see certificates VA: lowering (expertise): 30 mm; axle load to: 850 kg HA: lowering (expertise): 30 mm; axle load to: 820 kg

CITROËN

CITROËN C2 (JM_)

B12 SL	**1.1, 1.4, 1.4 16V, 1.4 HDi, 1.6, 1.6 HDi, 1.6 VTS** 09/03 - 44 -90 kW	**46-189370**		Conditions see certificates VA: lowering (expertise): 45-50 mm; axle load to: 820 kg HA: lowering (expertise): 30 mm; axle load to: 735 kg
B14	**1.1, 1.4, 1.4 16V, 1.4 HDi, 1.6, 1.6 HDi, 1.6 VTS** 09/03 - 44 -90 kW	**47-168299**		Conditions see certificates VA: lowering (expertise): 20-40 mm HA: lowering (expertise): 20-40 mm

CITROËN C3 (FC_)

B1	**1.1 i, 1.4 16V, 1.4 16V HDi, 1.4 Bioflex, 1.4 Flex, 1.4 HDi, 1.4 i, 1.4 i Bivalent, 1.6 16V, 1.6 16V HDi, 1.6 Bioflex** 02/02 - 44 -83 kW	**12-224258**		VA: with ball bearing; To Contr.No. 10156
B1	**1.1 i, 1.4 16V, 1.4 16V HDi, 1.4 HDi, 1.4 i, 1.4 i Bivalent, 1.6 16V** 02/02 - 44 -80 kW	**12-226542**		VA: without ball bearing; -> 01/05; From Contr.No. 10157
B3	**1.1 i, 1.4 16V, 1.4 16V HDi, 1.4 Bioflex, 1.4 Flex, 1.4 HDi, 1.4 i, 1.4 i Bivalent** 02/02 - 44 -66 kW	**37-154646**	**36-164202**	with standard chassis
B3	**1.1 i, 1.4 16V, 1.4 16V HDi, 1.4 Bioflex, 1.4 Flex, 1.4 HDi, 1.4 i, 1.4 i Bivalent** 02/02 - 44 -66 kW	**37-164225**	**36-164196**	with standard chassis; Heavy Duty Version .
B3	**1.6 16V, 1.6 16V HDi, 1.6 Bioflex** 02/02 - 66 -83 kW	**37-164225**	**36-164202**	with standard chassis
B3	**1.6 16V, 1.6 16V HDi, 1.6 Bioflex** 02/02 - 66 -83 kW	**37-164218**	**36-164196**	with standard chassis; Heavy Duty Version .
B4	**1.1 i, 1.4 16V, 1.4 16V HDi, 1.4 Bioflex, 1.4 Flex, 1.4 HDi, 1.4 i, 1.4 i Bivalent, 1.6 16V, 1.6 16V HDi, 1.6 Bioflex** 02/02 - 44 -83 kW	**22-118608** ↰ **22-118615** ↱	**19-223025** OIO	
B6 Sport	**1.1 i, 1.4 16V, 1.4 16V HDi, 1.4 Bioflex, 1.4 Flex, 1.4 HDi, 1.4 i, 1.4 i Bivalent, 1.6 16V, 1.6 16V HDi, 1.6 Bioflex** 02/02 - 44 -83 kW	**35-140795** ↰ **35-140801** ↱	**24-140812** OIO	with standard chassis
B12 PK	**1.1 i, 1.4 16V, 1.4 16V HDi, 1.4 Bioflex, 1.4 Flex, 1.4 HDi, 1.4 i, 1.4 i Bivalent, 1.6 16V, 1.6 Bioflex** 02/02 - 44 -83 kW	**46-189363**		Conditions see certificates VA: lowering (expertise): 30 mm; axle load to: 850 kg HA: lowering (expertise): 30 mm; axle load to: 820 kg
B12 SL	**1.1 i, 1.4 16V, 1.4 16V HDi, 1.4 Bioflex, 1.4 Flex, 1.4 HDi, 1.4 i, 1.4 i Bivalent, 1.6 16V, 1.6 Bioflex** 02/02 - 44 -83 kW	**46-189370**		Conditions see certificates VA: lowering (expertise): 45-50 mm; axle load to: 820 kg HA: lowering (expertise): 30 mm; axle load to: 735 kg
B14	**1.1 i, 1.4 16V, 1.4 16V HDi, 1.4 Bioflex, 1.4 Flex, 1.4 HDi, 1.4 i, 1.4 i Bivalent, 1.6 16V, 1.6 16V HDi, 1.6 Bioflex** 02/02 - 44 -83 kW	**47-168299**		Conditions see certificates VA: lowering (expertise): 20-40 mm HA: lowering (expertise): 20-40 mm

CITROËN C3 Pluriel (HB_)

B1	**1.4, 1.4 HDi, 1.6** 05/03 - 50 -80 kW	**12-224258**		VA: with ball bearing; To Contr.No. 10156
B1	**1.4, 1.4 HDi, 1.6** 05/03 - 50 -80 kW	**12-226542**		VA: without ball bearing; From Contr.No. 10157
B3	**1.4, 1.4 HDi, 1.6** 05/03 - 50 -80 kW	**37-164218**	**36-164196**	with standard chassis
B4	**1.4, 1.4 HDi, 1.6** 05/03 - 50 -80 kW	**22-118608** ↰ **22-118615** ↱	**19-223025** OIO	

CITROËN

CITROËN C3 Pluriel (HB_)

CITROËN C3				
B4	**1.1, 1.1 BiFuel, 1.4, 1.4 16V, 1.4 Flex, 1.4 HDi, 1.6 16V, 1.6 Flex, 1.6 HDi** 11/09 - 44 -88 kW	**22-193421** **22-193438**	**19-193441** OIO	VA: Øa: 47 mm
B4	**1.1, 1.1 BiFuel, 1.4, 1.4 16V, 1.4 Flex, 1.4 HDi, 1.6 16V, 1.6 Flex, 1.6 HDi** 11/09 - 44 -88 kW	**22-195241** **22-195258**	**19-193441** OIO	VA: Øa: 51 mm
B6 Sport	**1.1, 1.1 BiFuel, 1.4, 1.4 16V, 1.4 Flex, 1.4 HDi, 1.6 16V, 1.6 Flex, 1.6 HDi** 11/09 - 44 -88 kW	**35-176862** **35-176879**	**24-176880** OIO	VA: Øa: 47 mm
B6 Sport	**1.1, 1.1 BiFuel, 1.4, 1.4 16V, 1.4 Flex, 1.4 HDi, 1.6 16V, 1.6 Flex, 1.6 HDi** 11/09 - 44 -88 kW	**35-223276** **35-223283**	**24-176880** OIO	VA: Øa: 51 mm
B8	**1.1, 1.1 BiFuel, 1.4, 1.4 16V, 1.4 Flex, 1.4 HDi, 1.6 16V, 1.6 Flex, 1.6 HDi** 11/09 - 44 -88 kW	**35-176893** **35-176909**	**24-176002** OIO	VA: Øa: 47 mm
B8	**1.1, 1.1 BiFuel, 1.4, 1.4 16V, 1.4 Flex, 1.4 HDi, 1.6 16V, 1.6 Flex, 1.6 HDi** 11/09 - 44 -88 kW	**35-223290** **35-223306**	**24-176002** OIO	VA: Øa: 51 mm
B14	**1.1, 1.1 BiFuel, 1.4, 1.4 16V, 1.4 Flex, 1.4 HDi, 1.6 16V, 1.6 Flex, 1.6 HDi** 11/09 - 44 -88 kW	**47-175976**		Øa: 47 mm; Conditions see certificates VA: lowering (expertise): 30-50 mm HA: lowering (expertise): 30-50 mm
CITROËN C4 (LC_)				
B1	**1.4 16V, 1.6 16V, 1.6 16V Bio-Flex, 1.6 HDi, 1.6 THP 140, 1.6 THP 150, 1.6 VTi 120, 2.0 16V, 2.0 HDi** 11/04 - 65 -130 kW		**12-224333**	HA: without ball bearing
B3	**1.4 16V** 11/04 - 65 kW	**36-199716**	**36-199808**	with standard chassis; without panaroma sunroof
B3	**1.4 16V** 11/04 - 65 kW	**36-199716**	**36-199761**	with standard chassis; with panorama sunroof
B3	**1.4 16V** 11/04 - 65 kW		**36-199785**	with standard chassis; Heavy Duty Version .
B3	**1.6 16V, 1.6 16V Bio-Flex** 11/04 - 80 kW	**36-199723**		with standard chassis; manual transmission
B3	**1.6 16V, 1.6 16V Bio-Flex, 1.6 16V** 11/04 - 80 kW	**36-199730**		with standard chassis; automatic transmission
B3	**1.6 16V, 1.6 16V Bio-Flex, 1.6 16V** 11/04 - 80 kW		**36-199808**	with standard chassis; without panaroma sunroof
B3	**1.6 16V, 1.6 16V Bio-Flex, 1.6 16V** 11/04 - 80 kW		**36-199761**	with standard chassis; with panorama sunroof
B3	**1.6 16V, 1.6 16V Bio-Flex, 1.6 16V** 11/04 - 80 kW		**36-199785**	with standard chassis; Heavy Duty Version .
B3	**2.0 16V** 11/04 - 130 kW	**36-199754**	**36-202249**	with standard chassis
B3	**1.6 HDi, 2.0 16V** 11/04 - 66 -103 kW	**36-199747**	**36-199808**	with standard chassis; without panaroma sunroof
B3	**1.6 HDi** 11/04 - 66 kW	**36-199730**	**36-199808**	with standard chassis; with panorama sunroof

CITROËN

CITROËN C4 (LC_)

B3	**1.6 HDi, 2.0 16V** 11/04 - 66 -103 kW		**36-199785**	with standard chassis; Heavy Duty Version .
B3	**1.6 HDi** 11/04 - 80 kW	**36-199730**	**36-199808**	with standard chassis
B3	**1.6 HDi** 11/04 - 80 kW		**36-199785**	with standard chassis; Heavy Duty Version .
B3	**2.0 HDi** 11/04 - 100 -103 kW	**36-199723**	**36-199808**	with standard chassis
B3	**2.0 HDi** 11/04 - 100 kW		**36-199785**	with standard chassis; Heavy Duty Version .
B3	**2.0 HDi** 07/08 - 103 kW		**36-199785**	with standard chassis; Heavy Duty Version .
B4	**1.4 16V, 1.6 16V, 1.6 16V Bio-Flex, 1.6 HDi, 1.6 THP 140, 1.6 THP 150, 1.6 VTi 120, 2.0 16V, 2.0 HDi** 11/04 - 65 -130 kW	**22-113115**	**19-113128**	with standard chassis
B6 Sport	**1.4 16V, 1.6 16V, 1.6 16V Bio-Flex, 1.6 HDi, 1.6 THP 140, 1.6 THP 150, 1.6 VTi 120, 2.0 16V, 2.0 HDi** 11/04 - 65 -130 kW	**35-052746**	**24-068604**	
B8	**1.4 16V, 1.6 16V, 1.6 16V Bio-Flex, 1.6 HDi, 1.6 THP 140, 1.6 THP 150, 1.6 VTi 120, 2.0 16V, 2.0 HDi** 11/04 - 65 -130 kW	**35-052753**	**24-068611**	
B12 PK	**1.4 16V, 1.6 THP 140, 1.6 THP 150, 1.6 VTi 120** 11/04 - 65 -110 kW	**46-189332**		Conditions see certificates VA: lowering (expertise): 30 mm; axle load to: 1010 kg HA: lowering (expertise): 25 mm; axle load to: 920 kg
B12 PK	**1.6 16V, 1.6 16V Bio-Flex** 11/04 - 80 kW	**46-189332**		Conditions see certificates; manual transmission VA: lowering (expertise): 30 mm; axle load to: 1010 kg HA: lowering (expertise): 25 mm; axle load to: 920 kg
B12 PK	**1.6 16V, 1.6 16V Bio-Flex, 1.6 HDi, 1.6 THP 140, 1.6 THP 150, 1.6 VTi 120, 2.0 16V, 2.0 HDi** 11/04 - 66 -130 kW	**46-189349**		Conditions see certificates VA: lowering (expertise): 30 mm; axle load to: 1120 kg HA: lowering (expertise): 25 mm; axle load to: 920 kg
B14	**1.4 16V, 1.6 16V, 1.6 16V Bio-Flex, 1.6 HDi, 1.6 THP 140, 1.6 THP 150, 1.6 VTi 120, 2.0 16V, 2.0 HDi** 11/04 - 65 -130 kW	**47-100817**		Conditions see certificates VA: lowering (expertise): 45-55 mm; axle load to: 1065 kg HA: lowering (expertise): 30-50 mm; axle load to: 1065 kg

CITROËN C4 Coupe (LA_)

B1	**1.4 16V, 1.6 16V, 1.6 HDi, 1.6 THP 150, 1.6 VTi 120, 2.0 16V, 2.0 HDi** 11/04 - 65 -130 kW		**12-224333**	HA: without ball bearing
B3	**1.4 16V** 11/04 - 65 kW	**36-199716**	**36-199808**	with standard chassis; without panaroma sunroof
B3	**1.4 16V** 11/04 - 65 kW	**36-199716**	**36-199761**	with standard chassis; with panorama sunroof
B3	**1.4 16V** 11/04 - 65 kW		**36-199785**	with standard chassis; Heavy Duty Version .
B3	**1.6 16V** 11/04 - 80 kW	**36-199723**		with standard chassis; manual transmission
B3	**1.6 THP 150, 2.0 16V** 11/04 - 100 -110 kW	**36-199747**	**36-199808**	with standard chassis; without panaroma sunroof

CITROËN				
CITROËN C4 Coupe (LA_)				
B3	**1.6 THP 150, 2.0 16V** 11/04 - 100 -110 kW	**37-171940**	**36-199785**	with standard chassis; Heavy Duty Version .
B3	**2.0 16V** 11/04 - 130 kW	**36-199754**	**36-202249**	with standard chassis
B3	**1.6 HDi** 11/04 - 66 kW	**36-199747**	**36-199808**	with standard chassis; without panaroma sunroof
B3	**1.6 HDi** 11/04 - 66 kW	**36-199730**	**36-199808**	with standard chassis; with panorama sunroof
B3	**1.6 HDi** 11/04 - 66 kW		**36-199785**	with standard chassis; Heavy Duty Version .
B3	**1.6 HDi** 11/04 - 80 kW	**36-199730**	**36-199808**	with standard chassis
B3	**1.6 HDi** 11/04 - 80 kW		**36-199785**	with standard chassis; Heavy Duty Version .
B3	**2.0 HDi** 11/04 - 100 -103 kW	**36-199723**	**36-199808**	with standard chassis
B3	**2.0 HDi** 11/04 - 100 -103 kW		**36-199785**	with standard chassis; Heavy Duty Version .
B4	**1.4 16V, 1.6 16V, 1.6 HDi, 1.6 THP 150, 1.6 VTi 120, 2.0 16V, 2.0 HDi** 11/04 - 65 -130 kW	**22-113115**	**19-113128**	with standard chassis
B6 Sport	**1.4 16V, 1.6 16V, 1.6 HDi, 1.6 THP 150, 1.6 VTi 120, 2.0 16V, 2.0 HDi** 11/04 - 65 -130 kW	**35-052746**	**24-068604**	
B8	**1.4 16V, 1.6 16V, 1.6 HDi, 1.6 THP 150, 1.6 VTi 120, 2.0 16V, 2.0 HDi** 11/04 - 65 -130 kW	**35-052753**	**24-068611**	
B12 PK	**1.4 16V, 1.6 THP 150, 1.6 VTi 120** 11/04 - 65 -110 kW	**46-189332**		Conditions see certificates VA: lowering (expertise): 30 mm; axle load to: 1010 kg HA: lowering (expertise): 25 mm; axle load to: 920 kg
B12 PK	**1.6 16V** 11/04 - 80 kW	**46-189332**		Conditions see certificates; manual transmission VA: lowering (expertise): 30 mm; axle load to: 1010 kg HA: lowering (expertise): 25 mm; axle load to: 920 kg
B12 PK	**1.6 16V, 1.6 HDi, 1.6 THP 150, 1.6 VTi 120, 2.0 16V, 2.0 HDi** 11/04 - 66 -130 kW	**46-189349**		Conditions see certificates VA: lowering (expertise): 30 mm; axle load to: 1120 kg HA: lowering (expertise): 25 mm; axle load to: 920 kg
B14	**1.4 16V, 1.6 16V, 1.6 HDi, 1.6 THP 150, 1.6 VTi 120, 2.0 16V, 2.0 HDi** 11/04 - 65 -130 kW	**47-100817**		Conditions see certificates VA: lowering (expertise): 45-55 mm; axle load to: 1065 kg HA: lowering (expertise): 30-50 mm; axle load to: 1065 kg
CITROËN C4 (B7)				
B1	**1.4, 1.6 16V, 1.6 HDi, 1.6 VTi 120 LPG, 2.0 HDi** 11/09 - 68 -110 kW	**12-226559**		VA: without ball bearing
CITROËN C5 (RD_)				
B4	**1.6 16V, 1.6 HDi, 1.8 16V, 2.0 16V, 2.0 HDi, 2.2 HDi, 2.7 HDi, 3.0, 3.0 HDi, 3.0 V6** 02/08 - 80 -177 kW	**19-194493**	**19-194509**	with standard chassis

CITROËN				
CITROËN C5 Break (TD_)				
B4	**1.6 16V, 1.6 HDi, 1.8 16V, 2.0 16V, 2.0 HDi, 2.2 HDi, 2.7 HDi, 3.0, 3.0 HDi, 3.0 V6** 02/08 - 80 -177 kW	**19-194493**	**19-194509**	with standard chassis
CITROËN C8 (EA_, EB_)				
B3	**2.0, 2.0 16V, 2.2** 07/02 - 100 -116 kW	36-217533	36-217571	with standard chassis
B3	**2.0, 2.0 16V, 2.2** 07/02 - 100 -116 kW		36-217588	with standard chassis; Heavy Duty Version .
B3	**2.0 HDi** 07/02 - 79 -120 kW	36-217540	36-217601	with standard chassis
B3	**2.0 HDi, 2.2 HDi, 3.0 V6** 07/02 - 79 -150 kW		36-217595	with standard chassis; Heavy Duty Version .
B3	**2.2 HDi** 07/02 - 94 -125 kW	36-217564	36-217601	with standard chassis
B4	**2.0, 2.0 16V, 2.0 HDi, 2.2, 2.2 HDi, 3.0 V6** 07/02 - 79 -150 kW	**22-128225** **22-139122**	**19-128238**	
CITROËN DS3				
B4	**1.4 16V, 1.6 16V, 1.6 HDi, 1.6 THP 150** 01/10 - 68 -115 kW	**22-193421** **22-193438**	**19-193441**	VA: Øa: 47 mm
B4	**1.4 16V, 1.6 16V, 1.6 HDi, 1.6 THP 150** 01/10 - 68 -115 kW	**22-195241** **22-195258**	**19-193441**	VA: Øa: 51 mm
B6 Sport	**1.4 16V, 1.6 16V, 1.6 HDi, 1.6 THP 150** 01/10 - 68 -115 kW	**35-176893** **35-176909**	**24-176002**	VA: Øa: 47 mm
B6 Sport	**1.4 16V, 1.4 HDi 70, 1.6 16V, 1.6 HDi, 1.6 Racing, 1.6 THP 150** 01/10 - 50 -152 kW	35-223290 35-223306	**24-176002**	VA: Øa: 51 mm
B14	**1.4 16V, 1.6 16V, 1.6 HDi, 1.6 THP 150** 01/10 - 68 -115 kW	**47-175976**		Øa: 47 mm; Without roadworthy certificate VA: lowering (expertise): 30-50 mm HA: lowering (expertise): 5-15 mm
CITROËN DS4				
B1	**1.6 HDi 110, 1.6 THP 155, 1.6 THP 200, 1.6 VTi 120, 2.0 HDi 160** 04/11 - 82 -147 kW	**12-226559**		VA: without ball bearing
CITROËN EVASION (22, U6)				
B1	**1.8, 1.9 TD, 2.0, 2.0 16V, 2.0 HDI, 2.0 TD, 2.0 Turbo C.T., 2.1 TD** 05/96 - 07/02 66 -108 kW	**12-117505** **12-117499**		VA: with ball bearing
B4	**1.8, 1.9 TD, 2.0, 2.0 16V, 2.0 HDI, 2.0 TD, 2.0 Turbo C.T., 2.1 TD** 10/97 - 07/02 66 -108 kW	**22-046734**	**19-110547**	CH.Nr.: 7609 ->; with standard chassis
B4	**1.9 TD, 2.0, 2.0 Turbo C.T., 2.1 TD** 06/94 - CH-Nr. 66 -108 kW	**22-046734**	**19-061054**	-> CH.Nr.: 7608; with standard chassis
CITROËN JUMPY (U6U)				
B1	**1.6, 1.9 D, 1.9 D 70, 1.9 TD, 2.0, 2.0 HDi, 2.0 i 16V** 10/95 - 51 -102 kW	**12-117505** **12-117499**		VA: with ball bearing

CITROËN

CITROËN JUMPY (U6U)

B4	**1.6, 1.9 D, 1.9 TD** 10/95 - 08/97 51 -68 kW	**22-046734**	**19-068022**	-> CH.Nr.: 7608; with standard chassis
B4	**1.6, 1.9 TD** 09/97 - 10/03 58 -68 kW	**22-046734**	**19-135106**	CH.Nr.: 7609-> 9793; with standard chassis
B4	**1.9 D 70, 2.0, 2.0 HDi, 2.0 i 16V** 04/98 - 10/03 51 -102 kW	**22-046734**	**19-135106**	-> CH.Nr.: 9793

CITROËN JUMPY Box (BS_, BT_, BY_, BZ_)

B1	**1.6 i, 1.9 D, 1.9 DT, 1.9 TD, 2.0 HDi, 2.0 HDi 110, 2.0 i 16V** 10/95 - 51 -102 kW	**12-117505** **12-117499**		VA: with ball bearing
B4	**1.6 i, 1.9 D, 1.9 DT, 1.9 TD** 10/95 - 08/97 51 -66 kW	**22-046734**	**19-068022**	-> CH.Nr.: 7608; with standard chassis
B4	**1.6 i, 1.9 DT, 1.9 TD** 09/97 - 10/03 58 -66 kW	**22-046734**	**19-135106**	CH.Nr.: 7609-> 9793; with standard chassis
B4	**1.9 D, 2.0 HDi, 2.0 HDi 110, 2.0 i 16V** 04/98 - 10/03 51 -102 kW	**22-046734**	**19-135106**	-> CH.Nr.: 9793

CITROËN JUMPY Flatbed / Chassis (BU_, BV_, BW_, BX_)

B1	**1.9 TD, 2.0 HDi** 10/99 - 68 -69 kW	**12-117505** **12-117499**		VA: with ball bearing
B4	**1.9 TD, 2.0 HDi** 10/99 - CH-Nr. 68 -69 kW	**22-046734**	**19-135106**	-> CH.Nr.: 8891

CITROËN JUMPY

B4	**1.6 HDi 90, 2.0 HDi 120, 2.0 HDi 125, 2.0 HDi 140, 2.0 HDi 165, 2.0 HDi 95, 2.0 i** 01/07 - 66 -120 kW	**i.V.** **i.V.**	**19-171203**	Heavy Duty Version .; with air suspension

CITROËN JUMPY Box

B4	**1.6 HDi 90, 2.0 HDi 120, 2.0 HDi 140, 2.0 i** 01/07 - 66 -103 kW		**19-171203**	

CITROËN NEMO Estate

B1	**1.2 HDi 75, 1.4, 1.4 HDi** 04/09 - 50 -55 kW	**12-226504** **12-226481**		VA: with ball bearing
B4	**1.4, 1.4 HDi** 04/09 - 50 -54 kW	**22-189271** **22-189288**	**19-189291**	

CITROËN NEMO Box (AA_)

B1	**1.2 HDi 75, 1.4, 1.4 HDi** 02/08 - 50 -55 kW	**12-226504** **12-226481**		VA: with ball bearing
B4	**1.4, 1.4 HDi** 02/08 - 50 -54 kW	**22-189271** **22-189288**	**19-189291**	

CITROËN SAXO (S0, S1)

B1	**1.0 X, 1.1 X,SX, 1.4 VTS, 1.5 D, 1.6, 1.6 VTL,VTR, 1.6 VTR, 1.6 VTS** 02/96 - 09/03 33 -88 kW	**12-116621**		VA: with ball bearing
B3	**1.0 X, 1.1 X,SX, 1.4 VTS** 05/96 - 01/99 33 -55 kW	**36-154654**		with standard chassis; without AC

CITROËN				
CITROËN SAXO (S0, S1)				
B3	**1.0 X, 1.1 X,SX, 1.5 D** 02/99 - 09/03 37 -44 kW	**36-202164**		with off-road suspension
B3	**1.1 X,SX** 05/96 - 01/99 44 kW	**36-154654**		with standard chassis; mark: Engine: TU1M
B3	**1.6 VTL,VTR** 02/99 - 06/03 65 kW	**36-202164**		with standard chassis; with AC; manual transmission
B3	**1.6 VTL,VTR** 02/99 - 06/03 65 kW	**36-202164**		with standard chassis; without AC; automatic transmission
B3	**1.6, 1.6 VTR, 1.6 VTS** 02/96 - 09/03 66 -87 kW	**36-154661**		with standard chassis
B3	**1.5 D** 02/99 - 09/03 40 -42 kW	**36-202164**		with standard chassis; without AC
B4	**1.0 X, 1.1 X,SX, 1.4 VTS, 1.5 D, 1.6, 1.6 VTL,VTR, 1.6 VTR, 1.6 VTS** 02/96 - 09/03 33 -88 kW	**21-030475** **11-122449** SP	**19-019765** OIO	
B6 Sport	**1.0 X, 1.1 X,SX, 1.4 VTS, 1.5 D, 1.6, 1.6 VTL,VTR, 1.6 VTR, 1.6 VTS** 02/96 - 09/03 33 -88 kW	**34-030608**	**24-020756** OIO	
B6 Sport	**1.0 X, 1.1 X,SX, 1.4 VTS, 1.5 D, 1.6, 1.6 VTL,VTR, 1.6 VTR, 1.6 VTS** 02/96 - 09/03 33 -88 kW	**34-030608**	**24-012768** OIO	HA: firmer setting
B8	**1.0 X, 1.1 X,SX, 1.4 VTS, 1.5 D, 1.6, 1.6 VTL,VTR, 1.6 VTR, 1.6 VTS** 02/96 - 09/03 33 -88 kW	**34-030592**	**24-020756** OIO	
B8	**1.0 X, 1.1 X,SX, 1.4 VTS, 1.5 D, 1.6, 1.6 VTL,VTR, 1.6 VTR, 1.6 VTS** 02/96 - 09/03 33 -88 kW	**34-030592**	**24-012768** OIO	HA: firmer setting
B12 PK	**1.0 X, 1.1 X,SX, 1.4 VTS, 1.5 D, 1.6, 1.6 VTL,VTR, 1.6 VTR, 1.6 VTS** 02/96 - 09/03 33 -88 kW	**46-189318**		Conditions see certificates VA: lowering (expertise): 30 mm; axle load to: 785 kg
B12 SL	**1.0 X, 1.1 X,SX, 1.4 VTS, 1.5 D, 1.6, 1.6 VTL,VTR, 1.6 VTR, 1.6 VTS** 02/96 - 09/03 33 -88 kW	**46-189325**		Conditions see certificates VA: lowering (expertise): 45-50 mm; axle load to: 785 kg
MS	**1.0 X, 1.1 X,SX, 1.4 VTS, 1.5 D, 1.6, 1.6 VTL,VTR, 1.6 VTR, 1.6 VTS** 02/96 - 09/03 33 -88 kW	**34-003510**	**24-012768** OIO	mark: Rallye Gruppe N HA: firmer setting
CITROËN VISA				
B2	**17 D** 04/84 - 03/91 44 kW	**17-053310** **11-101376** SP		with standard chassis
B4	**16 GTI** 01/85 - 06/86 76 kW	**22-041043** **22-041050** **11-101376** SP		with standard chassis
B4	**16 GTI** 06/86 - 12/88 83 kW	**22-041043** **22-041050** **11-101376** SP		with standard chassis
B4	**17 D** 04/84 - 03/91 44 kW	**22-040916** **11-101376** SP		with standard chassis

CITROËN

CITROËN XSARA (N1)

B1	**1.4 HDi, 1.4 i, 1.5 D, 1.6 16V, 1.6 i, 1.8 D, 1.8 i, 1.8 i 16V, 1.8 i Aut., 1.8 TD, 1.9 D, 1.9 SD, 1.9 TD, 2.0 16V, 2.0 HDi 109, 2.0 HDi 90** 02/99 - 03/05 42 -120 kW	**12-117000**		VA: with ball bearing
B4	**1.4 i, 1.5 D, 1.6 i, 1.8 D, 1.8 i, 1.8 i 16V, 1.8 i Aut., 1.8 TD, 1.9 D, 1.9 SD, 1.9 TD, 2.0 16V, 2.0 HDi 90** 04/97 - 09/00 42 -120 kW	**22-045676** **22-045669** **11-101376** *SP*	**19-068145** OIO	with standard chassis; without sport chassis
B4	**1.4 HDi, 1.4 i, 1.6 16V, 1.8 VTS, 1.9 D, 2.0 16V, 2.0 HDi 109, 2.0 HDi 90** 09/00 - 03/05 50 -100 kW	**22-168665** **22-168672** **11-101376** *SP*	**19-168685** OIO	with standard chassis; without sport chassis
B6 Sport	**1.4 i, 1.5 D, 1.6 16V, 1.6 i, 1.8 D, 1.8 i, 1.8 i 16V, 1.8 i Aut., 1.8 TD, 1.9 D, 1.9 SD, 1.9 TD, 2.0 16V, 2.0 HDi 90** 04/97 - 09/00 42 -120 kW	**35-046462** **35-046479**	**24-060608** OIO	with standard chassis; without sport chassis
B8	**1.4 i, 1.5 D, 1.6 16V, 1.6 i, 1.8 D, 1.8 i, 1.8 i 16V, 1.8 i Aut., 1.8 TD, 1.8 VTS, 1.9 D, 1.9 SD, 1.9 TD, 2.0 16V, 2.0 HDi 90** 04/97 - 09/00 42 -120 kW	**35-050162** **35-050179**	**24-060608** OIO	
B12 PK	**1.4 i, 1.5 D, 1.6 16V, 1.6 i, 1.8 D, 1.8 i, 1.8 i 16V, 1.8 i Aut., 1.8 TD, 1.8 VTS, 1.9 D, 1.9 SD, 1.9 TD, 2.0 16V, 2.0 HDi 90** 04/97 - 09/00 42 -120 kW	**46-189356**		Conditions see certificates VA: lowering (expertise): 30 mm; axle load to: 950 kg

CITROËN XSARA Break (N2)

B1	**1.4 HDi, 1.4 i, 1.5 D, 1.6 16V, 1.6 i, 1.8 D, 1.8 i, 1.8 i 16V, 1.8 i Aut., 1.9 D, 1.9 TD, 2.0 16V, 2.0 HDi 109, 2.0 HDI 90** 02/99 - 08/05 42 -100 kW	**12-117000**		VA: with ball bearing
B4	**1.4 i, 1.5 D, 1.6 i, 1.8 D, 1.8 i, 1.8 i 16V, 1.8 i Aut., 1.9 D, 1.9 TD, 2.0 HDI 90** 10/97 - 09/00 42 -81 kW	**22-045676** **22-045669** **11-101376** *SP*	**19-068145** OIO	with standard chassis
B4	**2.0 16V** 07/98 - 09/00 97 kW	**22-045676** **22-045669**	**19-068145** OIO	with standard chassis
B4	**1.4 HDi, 1.4 i, 1.6 16V, 1.9 D, 2.0 16V, 2.0 HDi 109, 2.0 HDI 90** 09/00 - 08/05 50 -100 kW	**22-168665** **22-168672** **11-101376** *SP*	**19-168685** OIO	with standard chassis; without sport chassis
B6 Sport	**1.4 i, 1.5 D, 1.6 16V, 1.6 i, 1.8 D, 1.8 i, 1.8 i 16V, 1.8 i Aut., 1.9 D, 1.9 TD, 2.0 16V, 2.0 HDI 90** 10/97 - 09/00 42 -100 kW	**35-046462** **35-046479**	**24-060608** OIO	with standard chassis; without sport chassis
B8	**1.4 i, 1.5 D, 1.6 16V, 1.6 i, 1.8 D, 1.8 i, 1.8 i 16V, 1.8 i Aut., 1.9 D, 1.9 TD, 2.0 16V, 2.0 HDI 90** 10/97 - 09/00 42 -100 kW	**35-050162** **35-050179**	**24-060608** OIO	
B12 PK	**1.4 i, 1.5 D, 1.6 16V, 1.6 i, 1.8 D, 1.8 i, 1.8 i 16V, 1.8 i Aut., 1.9 D, 1.9 TD, 2.0 16V, 2.0 HDI 90** 10/97 - 09/00 42 -100 kW	**46-189356**		Conditions see certificates VA: lowering (expertise): 30 mm; axle load to: 950 kg

CITROËN				
CITROËN XSARA Coupe (N0)				
B1	**1.4 HDi, 1.4 i, 1.6 16V, 1.6 i, 1.8 i, 1.8 i 16V, 1.9 D, 1.9 TD, 2.0, 2.0 16V, 2.0 HDi 109, 2.0 HDI 90, 2.0 i 16V** 02/98 - 03/05 50 -120 kW	**12-117000**		VA: with ball bearing
B4	**1.4 i, 1.6 i, 1.8 i, 1.8 i 16V, 1.9 D, 1.9 TD, 2.0, 2.0 HDI 90, 2.0 i 16V** 02/98 - 09/00 50 -120 kW	**22-045676** ↰ **22-045669** ↱ **11-101376** *SP*	**19-068145** OIO	with standard chassis; without sport chassis
B4	**1.4 HDi, 1.4 i, 1.6 16V, 1.8 VTS, 1.9 D, 2.0 16V, 2.0 HDi 109, 2.0 HDI 90, 2.0 i 16V** 09/00 - 03/05 50 -120 kW	**22-168665** ↰ **22-168672** ↱ **11-101376** *SP*	**19-168685** OIO	with standard chassis; without sport chassis
B6 Sport	**1.4 i, 1.6 16V, 1.6 i, 1.8 i, 1.8 i 16V, 1.9 D, 1.9 TD, 2.0, 2.0 16V, 2.0 HDI 90, 2.0 i 16V** 02/98 - 09/00 50 -120 kW	**35-046462** ↰ **35-046479** ↱	**24-060608** OIO	with standard chassis; without sport chassis
B8	**1.4 i, 1.6 16V, 1.6 i, 1.8 i, 1.8 i 16V, 1.8 VTS, 1.9 D, 1.9 TD, 2.0, 2.0 16V, 2.0 HDI 90, 2.0 i 16V** 02/98 - 09/00 50 -120 kW	**35-050162** ↰ **35-050179** ↱	**24-060608** OIO	
B12 PK	**1.4 i, 1.6 16V, 1.6 i, 1.8 i, 1.8 i 16V, 1.8 VTS, 1.9 D, 1.9 TD, 2.0, 2.0 16V, 2.0 HDI 90, 2.0 i 16V** 02/98 - 09/00 50 -120 kW	**46-189356**		Conditions see certificates VA: lowering (expertise): 30 mm; axle load to: 950 kg
CITROËN XSARA PICASSO (N68)				
B1	**1.6, 1.6 16V, 1.6 Flex, 1.6 HDi, 1.8 16V, 1.8 SX, 2.0 16V, 2.0 HDi** 12/99 - 65 -100 kW	**12-117925**		VA: with ball bearing
B3	**1.6, 1.6 16V, 1.6 Flex, 1.8 16V, 1.8 SX** 12/99 - 65 -85 kW	**36-198245**		with standard chassis
B3	**1.6, 1.6 16V, 1.6 Flex, 1.8 16V, 1.8 SX** 12/99 - 65 -85 kW	**36-198269**		with standard chassis; Heavy Duty Version .
B3	**2.0 16V** 01/03 - 100 kW	**36-200580**		with standard chassis
B3	**2.0 16V, 2.0 HDi** 12/99 - 66 -100 kW	**36-212552**		with standard chassis; Heavy Duty Version .
B3	**1.6 HDi** 05/04 - 66 -80 kW	**36-200580**		with standard chassis
B3	**2.0 HDi** 12/99 - 66 kW	**36-200580**		with standard chassis
B4	**1.6, 1.6 16V, 1.6 Flex, 1.6 HDi, 1.8 16V, 1.8 SX, 2.0 16V, 2.0 HDi** 12/99 - 65 -100 kW	**22-100030** ↰ **22-100047** ↱ **11-101376** *SP*	**19-100050** OIO	with standard chassis
CITROËN ZX (N2)				
B1	**1,1, 1.1, 1.4, 1.4 D, 1.4 i, 1.6, 1.6 i, 1.8, 1.8 D, 1.8 i, 1.8 i 16V, 1.9, 1.9 D, 1.9 DT, 1.9 i, 1.9 Luxury, 1.9 TD, 2.0, 2.0 i, 2.0 i 16V** 03/91 - 06/97 37 -122 kW	**12-117925**		VA: with ball bearing
B4	**1,1, 1.1, 1.4, 1.4 i, 1.6 i, 1.9, 1.9 i** 03/91 - 03/92 40 -96 kW	*22-040671* ↰ *22-040688* ↱ **11-101376** *SP*		-> CH.Nr.: 5683; with standard chassis

CITROËN

CITROËN ZX (N2)

B4	**1,1, 1.1, 1.4, 1.4 D, 1.4 i, 1.6, 1.6 i, 1.8 i, 1.8 i 16V, 1.9, 1.9 i** CH-Nr. - 06/97 37 -96 kW	**22-040657** **22-040664** **11-101376** SP	**19-019314** OIO	CH.Nr.: 5684 ->; CH.Nr.: 199204 ->; with standard chassis
B4	**1.9 D** 04/92 - 06/97 47 -50 kW	*22-040671* *22-040688* **11-101376** SP	**19-019314** OIO	CH.Nr.: 5684 ->; with standard chassis; without ABS
B4	**1.9 D** 04/92 - 06/97 47 -50 kW	**22-040657** **22-040664** **11-101376** SP	**19-019314** OIO	CH.Nr.: 5684 ->; with standard chassis; with ABS
B4	**1.9 TD** 04/92 - 06/97 66 kW	**22-040657** **22-040664** **11-101376** SP	**19-019314** OIO	CH.Nr.: 5684 ->; with standard chassis; mark: ex. Volcane
B4	**1.9 TD, 2.0 i, 2.0 i 16V** 04/92 - 06/97 66 -120 kW	**22-040657** **22-040664** **11-101376** SP	*19-019321* OIO	CH.Nr.: 5684 ->; with standard chassis; mark: Volcane
B6 Sport	**1,1, 1.1, 1.4, 1.4 D, 1.4 i, 1.6 i, 1.8 D, 1.8 i, 1.8 i 16V, 1.9 D, 1.9 TD** 03/91 - CH-Nr. 37 -81 kW	**22-040046** **22-040053**	**24-016247** OIO	-> CH.Nr.: 5683
B6 Sport	**1,1, 1.1, 1.4, 1.4 D, 1.4 i, 1.6 i, 1.8 D, 1.8 i, 1.8 i 16V, 1.9, 1.9 D, 1.9 i, 1.9 TD, 2.0 i, 2.0 i 16V** CH-Nr. - 06/97 37 -120 kW	**22-040213** **22-040220**	**24-016247** OIO	CH.Nr.: 5684 ->
B6 Sport	**1.9, 1.9 i, 2.0 i, 2.0 i 16V** 03/91 - CH-Nr. 88 -120 kW	**22-040046** **22-040053**	**24-016247** OIO	-> CH.Nr.: 5683

CITROËN ZX Break (N2)

B1	**1.4 i, 1.5 SX, 1.6 i, 1.8 D, 1.8 i, 1.8 i 16V, 1.9 D, 1.9 TD** 10/93 - 02/98 42 -81 kW	**12-117925**		VA: with ball bearing
B3	**1.6 i, 1.8 i** 10/93 - 10/97 65 -74 kW	**36-197507**		with standard chassis
B3	**1.9 D, 1.9 TD** 10/93 - 10/97 47 -66 kW	**36-198221**		with standard chassis
B4	**1.4 i, 1.5 SX, 1.6 i, 1.8 D, 1.8 i, 1.8 i 16V, 1.9 D, 1.9 TD** 10/93 - 02/98 42 -81 kW	**22-040657** **22-040664** **11-101376** SP		with standard chassis

CITROËN 2 CV

MS	**4, 6** 03/63 - 10/85 12 -21 kW	*24-197953*	*24-197953*	

CITROËN C25 Bus (280_, 290_)

B4	**1.8, 1.8 E, 1.9 D, 1.9 TD, 2.0, 2.0 E, 2.5 D, 2.5 D Turbo** 09/81 - 02/94 50 -70 kW		**19-065625** OIO	

CITROËN C25 Box (280_, 290_)

B4	**1.8, 1.9 D 1400, 1.9 DT, 2.0, 2.0 E, 2.5 D, 2.5 DT** 09/81 - 03/94 50 -70 kW		**19-065625** OIO	

CITROËN C25 Flatbed / Chassis (280_, 290_)

B4	**1.8, 1.9 1400, 1.9 DT, 2.0, 2.0 1000 E, 2.5 D, 2.5 DT 1400** 11/81 - 03/94 50 -70 kW		**19-065601** OIO	

CITROËN				
CITROËN JUMPER Bus (230P)				
B1	**1.9 D, 1.9 TD, 1.9 TD 4x4, 2.0, 2.0 4x4, 2.5 D, 2.5 D 4x4, 2.5 TD, 2.5 TD 4x4, 2.5 TDi, 2.5 TDI 4x4, 2.8 D, 2.8 HDi, 2.8 HDi 4x4** 12/96 - 04/02 51 -94 kW	**12-117536** **12-117529**		VA: with ball bearing
B2	**1.9 D, 1.9 TD, 1.9 TD 4x4, 2.0, 2.0 4x4, 2.5 D, 2.5 D 4x4, 2.5 TD, 2.5 TD 4x4, 2.5 TDi, 2.5 TDI 4x4** 12/96 - 04/02 51 -80 kW		**15-122582**	
B4	**1.9 D, 1.9 TD, 1.9 TD 4x4, 2.0, 2.0 4x4, 2.5 D, 2.5 D 4x4, 2.5 TD, 2.5 TD 4x4, 2.5 TDi, 2.5 TDI 4x4, 2.8 D, 2.8 HDi, 2.8 HDi 4x4** 12/96 - 04/02 51 -94 kW	**22-136244**	**19-065656**	
CITROËN JUMPER Box (230L)				
B1	**1.9 D, 1.9 TD, 2.0, 2.0 4x4, 2.0 HDI, 2.5 D, 2.5 D 4X4, 2.5 DT 4x4, 2.5 TD, 2.5 TDi, 2.5 TDi 4X4, 2.8 D, 2.8 HDi, 2.8 HDi 4x4** 01/99 - 04/02 50 -94 kW	**12-117536** **12-117529**		VA: with ball bearing
B2	**1.9 D, 1.9 TD, 2.0, 2.0 4x4, 2.5 D, 2.5 TD, 2.5 TDi** 12/96 - 04/02 50 -80 kW		**15-122582**	with standard chassis; To Payload 1400 kg
B4	**1.9 D, 1.9 TD, 2.0, 2.0 4x4, 2.0 HDI, 2.5 D, 2.5 D 4X4, 2.5 DT 4x4, 2.5 TD, 2.5 TDi, 2.5 TDi 4X4, 2.8 D, 2.8 HDi, 2.8 HDi 4x4** 01/99 - 04/02 50 -94 kW	**22-136244**	**19-065656**	with standard chassis; To Payload 1400 kg
B4	**1.9 D, 1.9 TD, 2.0, 2.0 4x4, 2.0 HDI, 2.5 D, 2.5 D 4X4, 2.5 DT 4x4, 2.5 TD, 2.5 TDi, 2.5 TDi 4X4, 2.8 D, 2.8 HDi, 2.8 HDi 4x4** 01/99 - 04/02 50 -94 kW	**22-136244**	**24-168731**	with standard chassis; To Payload 1800 kg
B4	**1.9 D, 1.9 TD, 2.0, 2.0 4x4, 2.0 HDI, 2.5 D, 2.5 D 4X4, 2.5 DT 4x4, 2.5 TD, 2.5 TDi, 2.5 TDi 4X4, 2.8 D, 2.8 HDi, 2.8 HDi 4x4** 01/99 - 04/02 50 -94 kW	**22-136244**	**24-168748**	To Payload 1800 kg; for campers
CITROËN JUMPER Flatbed / Chassis (230)				
B1	**1.9 TD, 2.0, 2.5 D, 2.5 D 4X4, 2.5 TD, 2.5 TDi, 2.5 TDi 4X4, 2.8 D, 2.8 HDi** 03/94 - 04/02 63 -94 kW	**12-117536** **12-117529**		VA: with ball bearing
B4	**1.9 TD, 2.0, 2.5 D, 2.5 TD, 2.5 TDi, 2.5 TDi 4X4, 2.8 D, 2.8 HDi** 03/94 - 04/02 63 -94 kW	**22-136244**	**19-065656**	with standard chassis; To Payload 1400 kg
B4	**1.9 TD, 2.0, 2.5 D, 2.5 TD, 2.5 TDi, 2.5 TDi 4X4, 2.8 D, 2.8 HDi** 03/94 - 04/02 63 -94 kW	**22-136244**	**24-168731**	with standard chassis; To Payload 1800 kg
CITROËN JUMPER Bus (244, Z_)				
B1	**2.0, 2.0 HDi, 2.2 HDi, 2.8 HDi** 04/02 - 62 -94 kW	**12-117536** **12-117529**		VA: with ball bearing
B4	**2.0, 2.0 HDi, 2.2 HDi, 2.8 HDi** 04/02 - 62 -94 kW	**22-136244**	**19-065656**	To Payload 1400 kg

CITROËN				
CITROËN JUMPER Box (244)				
B1	**2.0, 2.0 bivalent, 2.0 HDi, 2.2 HDi, 2.8 HDi, 2.8 HDi 4x4** 04/02 - 62 -107 kW	**12-117536** **12-117529**		VA: with ball bearing
B4	**2.0, 2.0 bivalent, 2.0 HDi, 2.2 HDi, 2.8 HDi, 2.8 HDi 4x4** 04/02 - 62 -107 kW	**22-136244**	**19-065656**	To Payload 1400 kg
CITROËN JUMPER Flatbed / Chassis (244)				
B1	**2.0 HDi, 2.2 HDi, 2.8 HDi** 04/02 - 62 -107 kW	**12-117536** **12-117529**		VA: with ball bearing
B4	**2.0 HDi, 2.2 HDi, 2.8 HDi** 04/02 - 62 -107 kW	**22-136244**	**19-065656**	To Payload 1400 kg
CITROËN JUMPER Box				
B4	**2.2 HDi 100, 2.2 HDi 120, 3.0 HDi 145, 3.0 HDi 155, 3.0 HDi 160** 04/06 - 74 -116 kW	**i.V.**	**19-183398**	mark: Light 11-15 Q
B4	**2.2 HDi 100, 2.2 HDi 120, 3.0 HDi 145, 3.0 HDi 155, 3.0 HDi 160** 04/06 - 74 -116 kW	**i.V.**	**19-183398**	mark: Light 17-18 Q
CITROËN JUMPER Flatbed / Chassis				
B4	**2.2 HDi 100, 2.2 HDi 120, 3.0 HDi 145, 3.0 HDi 160** 04/06 - 74 -116 kW	**i.V.**	**19-183398**	mark: Light 11-15 Q
B4	**2.2 HDi 100, 2.2 HDi 120, 3.0 HDi 145, 3.0 HDi 160** 04/06 - 74 -116 kW	**i.V.**	**19-183398**	mark: Light 17-18 Q
DACIA				
DACIA LOGAN				
B1	**1.2 16V, 1.4, 1.4 Bifuel, 1.5 dCi, 1.6, 1.6 16V, 1.6 MPI 85** 09/04 - 48 -77 kW	**12-224241**		VA: with ball bearing
B3	**1.2 16V, 1.4, 1.4 Bifuel, 1.6, 1.6 MPI 85** 09/04 - 55 -64 kW	**36-160433**	**36-160181**	with standard chassis
B3	**1.2 16V, 1.4, 1.4 Bifuel, 1.6, 1.6 MPI 85** 09/04 - 55 -64 kW	**36-160150**		with standard chassis; Heavy Duty Version .
B3	**1.5 dCi, 1.6 16V** 09/05 - 48 -77 kW	**36-160150**	**36-160181**	with standard chassis
B4	**1.2 16V, 1.4, 1.4 Bifuel, 1.5 dCi, 1.6, 1.6 16V, 1.6 MPI 85** 09/04 - 48 -77 kW	**22-122469**	**19-122472**	
B8	**1.2 16V, 1.4, 1.4 Bifuel, 1.5 dCi, 1.6, 1.6 16V, 1.6 MPI 85** 09/04 - 48 -77 kW	**22-140388**	**19-140391**	
B12 PK	**1.4, 1.5 dCi, 1.6, 1.6 16V, 1.6 MPI 85** 09/04 - 48 -77 kW	**46-189387**		Conditions see certificates VA: lowering (expertise): 35 mm; axle load to: 930 kg HA: lowering (expertise): 35 mm; axle load to: 880 kg
DACIA LOGAN MCV				
B1	**1.4, 1.5 dCi, 1.6, 1.6 16V, 1.6 16V Flexifuel, 1.6 MPI 85** 02/07 - 50 -77 kW	**12-224241**		VA: with ball bearing

DACIA				
DACIA LOGAN MCV				
B3	**1.4, 1.6, 1.6 LPG, 1.6 MPI 85** 02/07 - 55 -64 kW	**36-160433**	**36-160174**	with standard chassis
B3	**1.4, 1.6, 1.6 LPG, 1.6 MPI 85** 02/07 - 55 -64 kW	**36-160150**		with standard chassis; Heavy Duty Version .
B3	**1.5 dCi, 1.6 16V, 1.6 16V Flexifuel** 02/07 - 50 -77 kW	**36-160150**	**36-160174**	with standard chassis
B4	**1.4, 1.5 dCi, 1.6, 1.6 16V, 1.6 16V Flexifuel, 1.6 LPG, 1.6 MPI 85** 02/07 - 50 -77 kW	**22-122469**	**19-143026**	
B8	**1.4, 1.5 dCi, 1.6, 1.6 16V, 1.6 16V Flexifuel, 1.6 LPG, 1.6 MPI 85** 02/07 - 50 -77 kW	**22-140388**	**19-140391**	
B12 PK	**1.4, 1.5 dCi, 1.6, 1.6 16V, 1.6 MPI 85** 02/07 - 50 -77 kW	**46-189394**		Conditions see certificates VA: lowering (expertise): 30 mm; axle load to: 930 kg HA: lowering (expertise): 30 mm; axle load to: 1100 kg
DACIA LOGAN EXPRESS				
B1	**1.4, 1.5 dCi, 1.6, 1.6 MPI 85** 03/09 - 50 -65 kW	**12-224241**		VA: with ball bearing
B3	**1.4, 1.6, 1.6 MPI 85** 03/09 - 55 -64 kW	**36-160433**	**36-160174**	with standard chassis
B3	**1.4, 1.6, 1.6 MPI 85** 03/09 - 55 -64 kW	**36-160150**		with standard chassis; Heavy Duty Version .
B3	**1.5 dCi** 03/09 - 50 -65 kW	**36-160150**	**36-160174**	with standard chassis
B4	**1.4, 1.5 dCi, 1.6, 1.6 MPI 85** 03/09 - 50 -65 kW	**22-122469**	**19-143026**	
DACIA LOGAN Pickup				
B1	**1.4, 1.5 dCi, 1.6, 1.6 MPI 85** 03/08 - 50 -65 kW	**12-224241**		VA: with ball bearing
B3	**1.4, 1.6, 1.6 MPI 85** 03/08 - 55 -64 kW	**36-160433**	**36-160174**	with standard chassis
B3	**1.4, 1.6, 1.6 MPI 85** 03/08 - 55 -64 kW	**36-160150**		with standard chassis; Heavy Duty Version .
B3	**1.5 dCi** 03/08 - 50 -65 kW	**36-160150**	**36-160174**	with standard chassis
B4	**1.4, 1.5 dCi, 1.6, 1.6 MPI 85** 03/08 - 50 -65 kW	**22-122469**	**19-143026**	
DACIA SANDERO				
B1	**1.2 16V, 1.4, 1.4 MPI LPG, 1.5 dCi, 1.6, 1.6 MPI 85** 06/08 - 50 -65 kW	**12-224241**		VA: with ball bearing
B3	**1.2 16V, 1.4, 1.4 MPI LPG, 1.6, 1.6 MPI 85** 06/08 - 53 -64 kW	**36-197996**	**36-197972**	with standard chassis
B3	**1.2 16V, 1.4, 1.4 MPI LPG, 1.6, 1.6 MPI 85** 06/08 - 53 -64 kW	**36-160150**	**36-197989**	with standard chassis; Heavy Duty Version .
B3	**1.5 dCi** 11/08 - 50 -65 kW	**36-160150**	**36-197989**	with standard chassis

DACIA				
DACIA SANDERO				
B4	**1.2 16V, 1.4, 1.4 MPI LPG, 1.5 dCi, 1.6, 1.6 MPI 85** 06/08 - 50 -65 kW	**22-166371**	**19-166384**	
DAEWOO				
DAEWOO ARANOS				
B4	**1.5, 1.8, 2.0** 01/95 - 11/97 66 -77 kW	**21-030413** **11-101314** *SP*	**19-019956**	with standard chassis
DAEWOO CIELO				
B4	**1.5** 01/95 - 08/97 55 -66 kW	**21-030413** **11-101314** *SP*	**19-019956**	with standard chassis
DAEWOO ESPERO (KLEJ)				
B1	**1.5, 1.5 16V, 1.8, 2.0** 10/93 - 09/99 55 -81 kW	**12-116799**		VA: with ball bearing
B2	**1.5, 1.5 16V, 1.8, 2.0** 10/93 - 09/99 55 -81 kW	**16-031302** **11-101314** *SP*	**15-062215**	with standard chassis
B3	**1.5, 1.5 16V, 1.8, 2.0** 10/93 - 09/99 55 -81 kW	**36-154951**	**36-154968**	with standard chassis
B4	**1.5, 1.5 16V, 1.8, 2.0** 10/93 - 09/99 55 -81 kW	**21-030413** **11-101314** *SP*	**19-019956**	with standard chassis
B6 Sport	**1.5, 1.5 16V, 1.8, 2.0** 10/93 - 09/99 55 -81 kW	**34-001424**	**24-004862**	
B12 PK	**1.5, 1.5 16V, 1.8, 2.0** 10/93 - 09/99 55 -81 kW	**46-189400**		Conditions see certificates VA: lowering (expertise): 30 mm; axle load to: 860 kg HA: lowering (expertise): 30 mm; axle load to: 890 kg
MS	**1.5, 1.5 16V, 1.8, 2.0** 10/93 - 09/99 55 -81 kW	**34-001462**	**24-000925**	mark: Cup VA: charakteristic: 230/30 HA: charakteristic: 160/50
MS	**1.5, 1.5 16V, 1.8, 2.0** 10/93 - 09/99 55 -81 kW	**34-030721**	*24-024846*	mark: Rallye1 VA: charakteristic: 270/120 HA: charakteristic: 210/90
DAEWOO KALOS (KLAS)				
B3	**1.2** 04/03 - 53 kW	**36-216581**		with standard chassis
B3	**1.4, 1.4 16V** 09/02 - 61 -69 kW	**36-200740**		with standard chassis
B4	**1.2, 1.4, 1.4 16V** 09/02 - 53 -69 kW	**i.V.** **i.V.**	**19-169262**	
DAEWOO KALOS Saloon (KLAS)				
B3	**1.4, 1.5** 11/02 - 12/04 61 -69 kW	**36-200740**		with standard chassis
B4	**1.4, 1.5** 11/02 - 12/04 61 -69 kW	**i.V.** **i.V.**	**19-169262**	
DAEWOO KORANDO (KJ)				
B4	**2.3, 2.9 D, 2.9 TD, 3.2** 01/99 - 72 -156 kW	**19-140407**	**19-140414**	

DAEWOO

DAEWOO KORANDO (KJ)

DAEWOO KORANDO Cabrio (KJ)

B4	**2.0 16V, 2.3, 2.9 D, 2.9 TD** 02/99 - 72 -105 kW	**19-140407**		**19-140414**	

DAEWOO LANOS (KLAT)

B2	**1.4, 1.5, 1.6 16V** 05/97 - 55 -78 kW	**16-031302** **11-101314** *SP*		**15-062215**	with standard chassis
B3	**1.5** 05/97 - 63 kW	**36-224098**			
B3	**1.5** 10/97 - 06/99 73 kW	**36-224098**			
B3	**1.6 16V** 05/97 - 78 kW	**36-224098**			
B4	**1.4, 1.5, 1.6 16V** 05/97 - 55 -78 kW	**21-030413** **11-101314** *SP*		**19-019956**	with standard chassis
B6 Sport	**1.4, 1.5, 1.6 16V** 05/97 - 55 -78 kW	**34-001424**		**24-004862**	
MS	**1.4, 1.5, 1.6 16V** 05/97 - 55 -78 kW	**34-001462**		**24-000925**	mark: Cup VA: charakteristic: 230/30 HA: charakteristic: 160/50
MS	**1.4, 1.5, 1.6 16V** 05/97 - 55 -78 kW	**34-030721**		*24-024846*	mark: Rallye1 VA: charakteristic: 270/120 HA: charakteristic: 210/90
MS	**1.4, 1.5, 1.6 16V** 05/97 - 55 -78 kW	**34-030721**		*24-027366*	mark: Rallye1 VA: charakteristic: 270/120 HA: charakteristic: 85/29

DAEWOO LANOS Saloon (KLAT)

B2	**1.4, 1.5, 1.6 16V** 05/97 - 55 -78 kW	**16-031302** **11-101314** *SP*		**15-062215**	with standard chassis
B4	**1.4, 1.5, 1.6 16V** 05/97 - 55 -78 kW	**21-030413** **11-101314** *SP*		**19-019956**	with standard chassis
B6 Sport	**1.4, 1.5, 1.6 16V** 05/97 - 55 -78 kW	**34-001424**		**24-004862**	
MS	**1.4, 1.5, 1.6 16V** 05/97 - 55 -78 kW	**34-001462**		**24-000925**	mark: Cup VA: charakteristic: 230/30 HA: charakteristic: 160/50
MS	**1.4, 1.5, 1.6 16V** 05/97 - 55 -78 kW	**34-030721**		*24-024846*	mark: Rallye1 VA: charakteristic: 270/120 HA: charakteristic: 210/90
MS	**1.4, 1.5, 1.6 16V** 05/97 - 55 -78 kW	**34-030721**		*24-027366*	mark: Rallye1 VA: charakteristic: 270/120 HA: charakteristic: 85/29

DAEWOO MATIZ (KLYA)

B3	**0.8, 1.0** 09/98 - 38 -47 kW	**36-160822**		**36-160815**	with standard chassis
B4	**0.8, 1.0** 09/98 - 03/05 38 -47 kW	**22-050120** **22-050137**		**19-065045**	

DAEWOO NEXIA (KLETN)

B1	**1.5, 1.5 16V** 02/95 - 08/97 44 -66 kW	**12-116799**			VA: with ball bearing

DAEWOO				
DAEWOO NEXIA (KLETN)				
B2	**1.5, 1.5 16V** 02/95 - 08/97 44 -66 kW	**16-031302** **11-101314** SP	**15-062215**	with standard chassis
B3	**1.5, 1.5 16V** 02/95 - 08/97 44 -66 kW	**36-154951**	**36-154968**	with standard chassis
B4	**1.5, 1.5 16V** 02/95 - 08/97 44 -66 kW	**21-030413** **11-101314** SP	**19-019956**	with standard chassis
B6 Sport	**1.5, 1.5 16V** 02/95 - 08/97 44 -66 kW	**34-001424**	**24-004862**	
B8	**1.5, 1.5 16V** 02/95 - 08/97 44 -66 kW	**34-003114**	**24-013932**	HA: charakteristic: 107/36
B12 PK	**1.5, 1.5 16V** 02/95 - 08/97 44 -66 kW	**46-189424**		Conditions see certificates VA: lowering (expertise): 30 mm; axle load to: 760 kg HA: lowering (expertise): 30 mm; axle load to: 830 kg
B12 PK	**1.5 16V** 02/95 - 08/97 66 kW	**46-189431**		Conditions see certificates VA: lowering (expertise): 30 mm; axle load to: 830 kg HA: lowering (expertise): 30 mm; axle load to: 830 kg
MS	**1.5, 1.5 16V** 02/95 - 08/97 44 -66 kW	**34-030721**	*24-024846*	mark: Rallye1 VA: charakteristic: 270/120 HA: charakteristic: 210/90
DAEWOO NEXIA Saloon (KLETN)				
B1	**1.5, 1.5 16V** 02/95 - 08/97 44 -66 kW	**12-116799**		VA: with ball bearing
B2	**1.5, 1.5 16V** 02/95 - 08/97 44 -66 kW	**16-031302** **11-101314** SP	**15-062215**	with standard chassis
B3	**1.5, 1.5 16V** 02/95 - 08/97 44 -66 kW	**36-154951**	**36-154968**	with standard chassis
B4	**1.5, 1.5 16V** 02/95 - 08/97 44 -66 kW	**21-030413** **11-101314** SP	**19-019956**	with standard chassis
B6 Sport	**1.5, 1.5 16V** 02/95 - 08/97 44 -66 kW	**34-001424**	**24-004862**	
B8	**1.5** 08/96 - 08/97 44 kW	**34-003114**	**24-013932**	HA: charakteristic: 107/36
B12 PK	**1.5, 1.5 16V** 02/95 - 08/97 44 -66 kW	**46-189424**		Conditions see certificates VA: lowering (expertise): 30 mm; axle load to: 760 kg HA: lowering (expertise): 30 mm; axle load to: 830 kg
B12 PK	**1.5 16V** 02/95 - 08/97 66 kW	**46-189431**		Conditions see certificates VA: lowering (expertise): 30 mm; axle load to: 830 kg HA: lowering (expertise): 30 mm; axle load to: 830 kg
MS	**1.5, 1.5 16V** 02/95 - 08/97 44 -66 kW	**34-030721**	*24-024846*	mark: Rallye1 VA: charakteristic: 270/120 HA: charakteristic: 210/90
DAEWOO NEXIA Saloon				
B3	**1.5** 07/08 - 59 kW	**36-154951**	**36-154968**	with standard chassis
B3	**1.6** 07/08 - 80 kW	**36-164318**	**38-130373**	with standard chassis; Heavy Duty Version .
B4	**1.5, 1.6** 07/08 - 59 -80 kW	**21-030413** **11-101314** SP	**19-019956**	with standard chassis

DAEWOO				
DAEWOO NEXIA Saloon				
B6 Sport	**1.5, 1.6** 07/08 - 59 -80 kW	**34-001424**	**24-004862**	
B12 PK	**1.5, 1.6** 07/08 - 59 -80 kW	**46-189424**		Conditions see certificates VA: lowering (expertise): 30 mm; axle load to: 760 kg HA: lowering (expertise): 30 mm; axle load to: 830 kg
B12 PK	**1.5, 1.6** 07/08 - 59 -80 kW	**46-189431**		Conditions see certificates VA: lowering (expertise): 30 mm; axle load to: 830 kg HA: lowering (expertise): 30 mm; axle load to: 830 kg
DAEWOO NUBIRA (KLAJ)				
B3	**1.6, 1.6 16V, 1.8, 2.0 16V, 2.0 CDX** 05/97 - 70 -98 kW	**36-164189**	**36-164172**	with standard chassis
DAEWOO NUBIRA Saloon (KLAJ)				
B3	**1.5 SE, 1.6 16V, 1.8, 2.0, 2.0 16V** 05/97 - 70 -98 kW	**36-164189**	**36-164172**	with standard chassis
DAEWOO NUBIRA Wagon (KLAJ)				
B3	**1.6 16V, 1.8, 2.0 16V** 05/97 - 66 -98 kW	**36-164189**	**36-164165**	with standard chassis
DAEWOO NUBIRA Saloon (KLAN)				
B3	**1.4, 1.6, 1.8** 07/03 - 69 -90 kW	**36-164189**	**36-164165**	with standard chassis
DAEWOO NUBIRA Wagon (KLAN)				
B3	**1.6, 1.8** 07/03 - 70 -90 kW	**36-164189**	**36-164165**	with standard chassis
DAEWOO TICO				
B4	**0.5 S** 05/89 - 03/96 22 kW	i.V. i.V.	*19-065038*	
DAEWOO TICO (KLY3)				
B4	**0.8** 02/95 - 12/00 35 kW	*22-050106* *22-050113*	*19-065038*	
DAIHATSU				
DAIHATSU CHARADE III (G100, G101, G102)				
B4	**1.0, 1.0 D, 1.0 TD, 1.0 Turbo** 03/87 - 12/92 27 -50 kW		*22-048721*	
B4	**1.0 GTi** 03/87 - 12/92 74 kW		*22-048707* *22-048714*	
B4	**1.3 i** 06/88 - 12/92 66 kW			with standard chassis
DAIHATSU CHARADE IV (G200, G202)				
B4	**1.0, 1.3, 1.3 16V, 1.5 16V, 1.6 GTi** 03/93 - 11/99 38 -77 kW			with standard chassis; with ABS
DAIHATSU CHARADE IV Saloon (G203)				
B4	**1.0, 1.3, 1.5, 1.5 16V, 1.6 GS** 03/93 - 55 -77 kW			with standard chassis; with ABS

DAIHATSU

DAIHATSU CHARADE IV Saloon (G203)

DAIHATSU CHARMANT (A)

B4	**1.3, 1.6** 11/81 - 07/87 48 -61 kW		*19-019437*	

DAIHATSU CUORE VI (L7_)

B3	**1.0 i** 10/98 - 05/03 41 kW	**36-215010**	**36-219346**	with standard chassis
B4	**0.7, 1.0, 1.0 DVVT, 1.0 i** 10/98 - 05/03 31 -43 kW		**19-142173**	

DAIHATSU FEROZA Soft Top (F300)

B6 Offroad	**1.6 16V, 1.6 i 16V** 10/88 - 63 -70 kW	**24-014441**	**24-014458**	with leaf-spring suspension

DAIHATSU FEROZA Hard Top (F300)

B6 Offroad	**1.6 16V, 1.6 i 16V** 10/88 - 63 -70 kW	**24-014441**	**24-014458**	with leaf-spring suspension

DAIHATSU MOVE (L6, L9)

B4	**0.8, 1.0 i** 10/96 - 31 -41 kW		**19-142173**	

DAIHATSU SIRION (M1)

B3	**1.0 i** 04/98 - 01/05 41 -43 kW	**36-221158**	**36-221165**	with standard chassis

DAIHATSU SIRION (M3_)

B3	**1.0** 01/05 - 51 kW	**36-219766**	**36-219773**	with standard chassis
B3	**1.3** 01/05 - 64 kW	**36-219872**	**36-219773**	with standard chassis; manual transmission

DAIHATSU WILDCAT/ROCKY (F70)

B6 Offroad	**2.8 D, 2.8 TD** 02/85 - 04/87 54 -65 kW	**24-011020**	**24-011020**	with leaf-spring suspension

DAIHATSU WILDCAT/ROCKY (F75)

B6 Offroad	**2.7 TD, 2.8 D** 02/85 - 04/87 54 -65 kW	**24-011020**	**24-011020**	with leaf-spring suspension

DAIMLER

DAIMLER 2.8 - 5.3

B6 Sport	**3.6, Double Six / Vanden 5.3, Double Six 5.3, Double Six H.E. 5.3, Sovereign 2.8, Sovereign 3.4, Sovereign 4.2** 03/79 - 02/93 110 -217 kW	**24-024457**	**24-024464**	without ride height adjustment

DAIMLER COUPE

B6 Sport	**Double Six 5.3, Sovereign 4.2** 09/73 - 12/77 127 -213 kW	**24-024457**	**24-024464**	without ride height adjustment

DAIMLER				
DAIMLER DAIMLER (X300)				
B4	**Double Six 6.0, Six 4.0** 09/94 - 177 -229 kW	**24-018616**	**24-018586**	
DAIMLER XJ 40, 81				
B6 Sport	**Double Six 6.0, Sovereign 3.6, Sovereign 4.0** 09/89 - 09/94 136 -229 kW	**24-018043**	**24-018050**	without ride height adjustment
DE LOREAN				
DE LOREAN DMC-12				
B6 Sport	**2.9** 01/81 - 12/83 97 kW	*24-634038*	*24-634045*	mark: m/o flux capacitor
DODGE				
DODGE CARAVAN II				
B4	**2.0 i, 2.4 i, 2.5 TD, 3.0, 3.3 i, 3.8 i, 3.8 i AWD** 01/95 - 03/01 85 -131 kW		**19-065212**	HA: with standard chassis
B6 Sport	**2.0 i, 2.4 i, 2.5 TD, 3.0, 3.3 i, 3.8 i, 3.8 i AWD** 01/95 - 03/01 85 -131 kW		*24-015226*	HA: with standard chassis
DODGE DAKOTA				
B6 Offroad	**2.5, 3.9 SLT, 5.2, 5.9** 10/95 - 09/03 88 -184 kW	**24-064606**	**24-065382**	mark: ex. Quad Cab
B6 Offroad	**2.5, 3.9 SLT, 5.2, 5.9** 01/00 - 09/03 88 -184 kW	**24-064606**	**24-107013**	mark: Quad Cab
B6 Offroad	**3.9 AWD, 4.7 AWD** 10/95 - 09/03 128 -172 kW	**24-185233**	**24-185240**	mark: ex. Quad Cab
B6 Offroad	**3.9 AWD, 4.7 AWD** 01/01 - 09/03 128 -172 kW	**24-185233**	**33-185859**	mark: Quad Cab
DODGE DAKOTA				
B6 Offroad	**4.7, 4.7 AWD** 10/03 - 12/04 172 kW	**24-185233**	**24-185240**	mark: ex. Quad Cab
B6 Offroad	**4.7, 4.7 AWD** 10/03 - 12/04 172 kW	**24-185233**	**33-185859**	mark: Quad Cab
DODGE DURANGO				
B6 Offroad	**3.7, 3.7 AWD, 4.7 AWD, 5.7 SLT Hemi AWD** 11/03 - 157 -257 kW	**24-139106**	**24-139113**	with standard chassis
DODGE NITRO				
B6 Offroad	**2.8 CRD 4WD** 06/07 - 130 kW	**24-139168**	**24-139175**	
DODGE RAM Pickup				
B6 Offroad	**3.7, 4.7, 5.9 TD** 06/01 - 157 -172 kW	*24-069274*	*24-025508*	

DODGE				
DODGE RAM Pickup				
B6 Offroad	**4.7 AWD, 5.9 AWD, 5.9 TDi AWD, 8.0 All-wheel Drive** 06/01 - 172 -228 kW	*24-069281*	*24-025508*	
FIAT				
FIAT ARGENTA (132A)				
B4	**1600, 1600 i.e, 2000, 2000 i.e., 2000 Volumex, 2500 Diesel, 2500 Turbodiesel** 06/78 - 07/86 53 -99 kW		*19-019291*	
FIAT BARCHETTA (183)				
B3	**1.8 16V** 04/95 - 96 kW	**36-200429**	**36-200436**	with standard chassis
B4	**1.8 16V** 04/95 - 96 kW	**22-165954**	**19-165967**	with standard chassis
B6 Sport	**1.8 16V** 04/95 - 96 kW	**22-042750**	**24-024662**	
B8	**1.8 16V** 04/95 - 96 kW	**22-042767**	**24-024679**	
B12 PK	**1.8 16V** 04/95 - 96 kW	**46-192509**		Conditions see certificates VA: lowering (expertise): 30 mm; axle load to: 850 kg HA: lowering (expertise): 30 mm; axle load to: 700 kg
FIAT BRAVA (182)				
B1	**1.2 16V 80, 1.8 GT 16V, 1.9 JTD, 1.9 JTD 105, 1.9 TD 100 S, 1.9 TD 75 S, 2.0** 09/98 - 10/01 55 -113 kW	**12-116850**		VA: with ball bearing
B1	**1.4, 1.4 12 V, 1.6 16V** 10/95 - 12/02 55 -76 kW	**12-117550** **12-117567**		without power steering VA: with ball bearing
B1	**1.4, 1.4 12 V, 1.6 16V** 10/95 - 12/02 55 -76 kW	**12-116850**		with power steering VA: with ball bearing
B3	**1.2 16V 80** 12/98 - 10/01 59 -60 kW	**36-200276**	**36-200641**	with standard chassis
B3	**1.4, 1.4 12 V** 10/95 - 10/01 55 -59 kW	**36-200276**	**36-200641**	with standard chassis
B3	**1.6 16V** 10/95 - 10/01 66 -76 kW	**36-200276**	**36-200641**	with standard chassis
B3	**1.6 16V** 10/95 - 12/02 66 -76 kW	**36-200016**		with standard chassis; Heavy Duty Version .
B3	**1.8 GT 16V** 10/95 - 12/98 83 kW	**36-200276**	**36-200641**	with standard chassis
B3	**1.8 GT 16V** 01/99 - 10/01 83 kW	**36-200276**	**36-200641**	with standard chassis
B3	**1.8 GT 16V** 10/95 - 10/01 83 kW	**36-200016**		with standard chassis; Heavy Duty Version .
B3	**1.9 D, 2.0** 10/95 - 10/01 48 -113 kW	**36-200276**	**36-200641**	with standard chassis

D

F

FIAT

FIAT BRAVA (182)

B3	**1.9 D, 2.0** 10/95 - 10/01 48 -113 kW	**36-200016**		with standard chassis; Heavy Duty Version .
B3	**1.9 TD 100 S, 1.9 TD 75 S** 03/96 - 10/01 55 -74 kW	**36-200016**	**36-200641**	with standard chassis
B3	**1.9 JTD, 1.9 JTD 105** 12/98 - 10/01 74 -77 kW	**36-200016**	**36-200641**	with standard chassis
B3	**1.9 JTD, 1.9 JTD 105, 1.9 TD 100 S, 1.9 TD 75 S** 03/96 - 10/01 55 -77 kW	**36-199921**		with standard chassis; Heavy Duty Version .
B4	**1.2 16V 80, 1.4, 1.4 12 V, 1.6 16V** 01/96 - 10/01 55 -66 kW	**22-040992** **11-101499** *SP*	**19-029252**	CH.Nr.: 4085697 ->
B4	**1.4, 1.4 12 V, 1.6 16V** 10/95 - 01/96 55 -66 kW	**22-051813** **11-101499** *SP*	**19-029252**	-> CH.Nr.: 4085697
B4	**1.6 16V** 02/96 - 12/02 76 kW	**22-040992** **11-101499** *SP*	**19-029252**	
B4	**1.8 GT 16V, 1.9 D, 1.9 JTD, 1.9 JTD 105, 1.9 TD 100 S, 1.9 TD 75 S, 2.0** 10/95 - 10/01 48 -113 kW	**22-045508** **11-101499** *SP*	**19-029252**	
B6 Sport	**1.2 16V 80, 1.4, 1.4 12 V, 1.6 16V, 1.8 GT 16V, 1.9 D, 1.9 JTD, 1.9 JTD 105, 1.9 TD 100 S, 1.9 TD 75 S, 2.0** 01/96 - 10/01 48 -113 kW	*22-041852*	**24-015714**	CH.Nr.: 4085697 ->; HA: firmer setting
B6 Sport	**1.6 16V** 02/96 - 12/02 76 kW	*22-041852*	**24-015714**	HA: firmer setting
B8	**1.2 16V 80, 1.4, 1.4 12 V, 1.6 16V, 1.8 GT 16V, 1.9 D, 1.9 JTD, 1.9 JTD 105, 1.9 TD 100 S, 1.9 TD 75 S, 2.0** 01/96 - 10/01 48 -113 kW	*22-041982*	**24-018005**	CH.Nr.: 4085697 ->
B8	**1.6 16V** 02/96 - 12/02 76 kW	*22-041982*	**24-018005**	

FIAT BRAVO (182)

B1	**1.2 16V 80, 1.9 JTD 105, 1.9 TD 100 S, 1.9 TD 75 S** 03/96 - 10/01 55 -77 kW	**12-116850**		VA: with ball bearing
B1	**1.4, 1.6, 1.6 16V** 10/95 - 02/02 55 -76 kW	**12-117550** **12-117567**		without power steering; VA: with ball bearing
B1	**1.4, 1.6, 1.6 16V** 10/95 - 02/02 55 -76 kW	**12-116850**		with power steering; VA: with ball bearing
B1	**1.8 GT** 10/95 - 10/01 83 kW	**12-116850**		VA: with ball bearing
B1	**2.0 HGT 20V** 10/95 - 10/01 108 -113 kW	**12-116850**		without sport chassis; VA: with ball bearing
B1	**2.0 HGT 20V** 10/95 - 10/01 108 -113 kW	**12-117550** **12-117567**		with sports suspension; VA: with ball bearing
B3	**1.2 16V 80** 12/98 - 10/01 59 -60 kW	**36-200276**	**36-200641**	with standard chassis
B3	**1.4** 10/95 - 10/01 55 -59 kW	**36-200276**	**36-200641**	with standard chassis
B3	**1.6 16V** 10/95 - 10/01 66 -76 kW	**36-200276**	**36-200641**	with standard chassis

FIAT				
FIAT BRAVO (182)				
B3	**1.6, 1.6 16V** 01/99 - 02/02 66 -76 kW	**36-200016**		with standard chassis; Heavy Duty Version .
B3	**1.8 GT** 10/95 - 12/98 83 kW	**36-200276**	**36-200641**	with standard chassis
B3	**1.8 GT** 10/95 - 12/98 83 kW	**36-200016**	**36-200641**	with standard chassis; Heavy Duty Version .
B3	**1.8 GT** 01/99 - 10/01 83 kW	**36-200276**	**36-200641**	with standard chassis
B3	**1.8 GT** 01/99 - 10/01 83 kW	**36-200016**		with standard chassis; Heavy Duty Version .
B3	**2.0 HGT 20V** 10/95 - 10/01 108 -113 kW	**36-195565**	**36-200641**	with standard chassis
B3	**1.9 D** 10/95 - 10/01 48 kW	**36-200276**	**36-200641**	with standard chassis
B3	**1.9 D** 10/95 - 10/01 48 kW	**36-200016**		with standard chassis; Heavy Duty Version .
B3	**1.9 TD 100 S, 1.9 TD 75 S** 03/96 - 12/98 55 -74 kW	**36-200016**	**36-200641**	with standard chassis
B3	**1.9 TD 100 S, 1.9 TD 75 S** 01/99 - 10/01 55 -74 kW	**36-200016**	**36-200641**	with standard chassis
B3	**1.9 TD 100 S, 1.9 TD 75 S** 03/96 - 10/01 55 -74 kW	**36-199921**	**36-200641**	with standard chassis; Heavy Duty Version .
B3	**1.9 JTD, 1.9 JTD 105** 12/98 - 10/01 74 -77 kW	**36-200016**	**36-200641**	with standard chassis
B3	**1.9 JTD, 1.9 JTD 105** 12/98 - 10/01 74 -77 kW	**36-199921**	**36-200641**	with standard chassis; Heavy Duty Version .
B4	**1.4, 1.6 16V** 10/95 - 01/96 55 -66 kW	**22-051813** **11-101499** SP	**19-029252** OIO	-> CH.Nr.: 4085697
B4	**1.4, 1.6 16V** 01/96 - 10/01 55 -66 kW	**22-040992** **11-101499** SP	**19-029252** OIO	CH.Nr.: 4085697 ->
B4	**1.6, 1.6 16V** 03/96 - 02/02 76 kW	**22-040992** **11-101499** SP	**19-029252** OIO	
B4	**1.8 GT, 1.9 D, 1.9 JTD, 1.9 JTD 105, 1.9 TD 100 S, 1.9 TD 75 S** 10/95 - 10/01 48 -83 kW	**22-045508** **11-101499** SP	**19-029252** OIO	
B4	**2.0 HGT 20V** 10/95 - 10/01 108 -113 kW		**19-029252** OIO	with sports suspension
B6 Sport	**1.4, 1.6 16V, 1.8 GT, 1.9 D, 1.9 JTD, 1.9 JTD 105, 1.9 TD 100 S, 1.9 TD 75 S** 01/96 - 10/01 48 -83 kW	*22-041852*	**24-015714** OIO	CH.Nr.: 4085697 ->; HA: firmer setting
B6 Sport	**1.6, 1.6 16V** 03/96 - 02/02 76 kW	*22-041852*	**24-015714** OIO	HA: firmer setting
B6 Sport	**2.0 HGT 20V** 10/95 - 10/01 108 -113 kW	*22-043016*	**24-015714** OIO	HA: firmer setting
B8	**1.4, 1.6 16V, 1.8 GT** 01/96 - 10/01 55 -83 kW	*22-041982*	**24-018005** OIO	CH.Nr.: 4085697 ->
B8	**1.6, 1.6 16V, 1.9 D, 1.9 JTD, 1.9 JTD 105, 1.9 TD 100 S, 1.9 TD 75 S** 03/96 - 02/02 48 -77 kW	*22-041982*	**24-018005** OIO	

F

FIAT

FIAT BRAVO (182)

B8	**2.0 HGT 20V** 10/95 - 10/01 108 -113 kW	*22-043023*	**24-018005**	

FIAT BRAVO (198)

B3	**1.4, 1.4 16V, 1.4 LPG, 1.4 T-Jet, 1.8 16V, 1.9 D Multijet** 11/06 - 66 -110 kW		**36-201396**	with standard chassis
B3	**1.4, 1.4 16V, 1.4 LPG, 1.4 T-Jet, 1.8 16V** 04/07 - 66 -110 kW		**36-201396**	with standard chassis; with AC
B3	**1.4, 1.4 16V, 1.4 LPG, 1.4 T-Jet, 1.8 16V** 04/07 - 66 -110 kW		**36-201396**	with standard chassis; with sun roof
B4	**1.4, 1.4 LPG, 1.4 T-Jet, 1.6 D Multijet, 1.8 16V, 1.9 D Multijet** 11/06 - 66 -110 kW	i.V. *22-113108*	**19-113098**	VA: fixing hole pitches at the front 58 mm
B6 Sport	**1.4, 1.4 16V, 1.4 LPG, 1.4 T-Jet, 1.6 D Multijet, 1.8 16V, 1.9 D Multijet** 11/06 - 66 -110 kW	i.V. *22-158901*	**24-067911**	VA: fixing hole pitches at the front 58 mm
B6 Sport	**1.9 D Multijet, 2.0 D Multijet** 04/07 - 110 -121 kW	**35-156338**	**24-067911**	VA: fixing hole pitches at the front 75 mm
B8	**1.4, 1.4 16V, 1.4 LPG, 1.4 T-Jet, 1.6 D Multijet, 1.8 16V, 1.9 D Multijet** 11/06 - 66 -110 kW	i.V. *22-158918*	**24-067928**	VA: fixing hole pitches at the front 58 mm
B8	**1.9 D Multijet, 2.0 D Multijet** 04/07 - 110 -121 kW	**35-156345**	**24-067928**	VA: fixing hole pitches at the front 75 mm
B12 PK	**1.4, 1.4 16V, 1.4 LPG, 1.4 T-Jet** 04/07 - 66 -110 kW	**46-192448**		fixing hole pitches at the front 58 mm; without ride height adjustment; Conditions see certificates VA: lowering (expertise): 30 mm; axle load to: 1000 kg HA: lowering (expertise): 30 mm; axle load to: 880 kg
B12 PK	**1.6 D Multijet, 1.9 D Multijet** 04/07 - 66 -110 kW	**46-192455**		fixing hole pitches at the front 58 mm; without ride height adjustment; Conditions see certificates VA: lowering (expertise): 30 mm; axle load to: 1090 kg HA: lowering (expertise): 30 mm; axle load to: 880 kg
B12 PK	**1.9 D Multijet** 11/06 - 66 -110 kW	**46-192462**		fixing hole pitches at the front 75 mm; without ride height adjustment; Conditions see certificates VA: lowering (expertise): 30 mm; axle load to: 1090 kg HA: lowering (expertise): 30 mm; axle load to: 880 kg
B12 SL	**1.4, 1.4 16V, 1.4 LPG, 1.4 T-Jet** 04/07 - 66 -110 kW	**46-192493**		fixing hole pitches at the front 58 mm; without ride height adjustment; Conditions see certificates VA: lowering (expertise): 45-50 mm; axle load to: 1000 kg HA: lowering (expertise): 30 mm; axle load to: 880 kg
B12 SL	**1.6 D Multijet, 1.9 D Multijet** 04/07 - 66 -110 kW	**46-192486**		fixing hole pitches at the front 58 mm; without ride height adjustment; Conditions see certificates VA: lowering (expertise): 45-50 mm; axle load to: 1090 kg HA: lowering (expertise): 30 mm; axle load to: 880 kg
B12 SL	**1.9 D Multijet** 11/06 - 66 -110 kW	**46-192479**		fixing hole pitches at the front 75 mm; without ride height adjustment; Conditions see certificates VA: lowering (expertise): 45-50 mm; axle load to: 1090 kg HA: lowering (expertise): 30 mm; axle load to: 880 kg
B14	**1.4, 1.4 16V, 1.4 LPG, 1.4 T-Jet, 1.6 D Multijet, 1.8 16V, 1.9 D Multijet** 11/06 - 66 -110 kW	**47-158993**		fixing hole pitches at the front 58 mm; Conditions see certificates VA: lowering (expertise): 20-30 mm; axle load to: 1150 kg HA: lowering (expertise): 10-30 mm; axle load to: 950 kg

FIAT CINQUECENTO (170)

B1	**0.7, 0.7 i, 0.9, 0.9 i.e., 0.9 i.e. S, 1.1 Sporting** 07/91 - 01/98 22 -40 kW	**12-116836**		VA: with ball bearing
B3	**0.7, 0.7 i, 0.9, 0.9 i.e., 0.9 i.e. S** 07/91 - 07/99 22 -30 kW	**36-164158**	**36-164141**	with standard chassis

FIAT				
FIAT CINQUECENTO (170)				
B4	**0.7, 0.7 i, 0.9, 0.9 i.e., 0.9 i.e. S, 1.1 Sporting** 07/91 - 01/98 22 -40 kW	**22-044839**	**19-028576** OIO	
FIAT COUPE (FA/175)				
B6 Sport	**1.8 16V, 2.0 16V, 2.0 20V** 11/93 - 08/00 96 -113 kW		**24-021685** OIO	VA: fixing hole pitches at the front 58 mm
B6 Sport	**2.0 16V Turbo, 2.0 20V Turbo** 11/93 - 08/00 140 -162 kW	*22-041401*	**24-021685** OIO	VA: fixing hole pitches at the front 75 mm
FIAT CROMA (154)				
B3	**2000 CHT, 2000 i.e.** 12/85 - 09/92 66 -88 kW		**36-160686**	with standard chassis
B3	**1900 Turbo D i.d., 2500 TD, 2500 TDE** 12/85 - 08/96 66 -85 kW	**36-160648**	**36-160686**	with standard chassis
B4	**1600, 1900 Turbo D i.d., 2000 16V, 2000 CHT, 2000 i.e., 2000 i.e. Turbo, 2500 D, 2500 TD, 2500 TDE** 12/85 - 08/96 55 -114 kW	*22-046772*	*22-046789* **11-101383** SP	
FIAT CROMA (194)				
B1	**1.8 16V, 1.9 D Multijet, 2.2 16V, 2.4 D Multijet** 06/05 - 85 -147 kW	**12-224272**		VA: with ball bearing
B3	**2.2 16V** 06/05 - 108 kW	**36-219179**	**36-219162**	with standard chassis; manual transmission
B3	**2.2 16V** 06/05 - 108 kW	**36-215065**	**36-219162**	with standard chassis; automatic transmission
B3	**1.9 D Multijet** 06/05 - 85 -110 kW	**36-215065**	**36-219162**	with standard chassis
B4	**1.8 16V, 1.9 D Multijet, 2.2 16V, 2.4 D Multijet** 06/05 - 85 -147 kW	**22-118738** **22-118745**	**19-118758** OIO	with standard chassis
B6 Sport	**1.8 16V, 1.9 D Multijet, 2.2 16V, 2.4 D Multijet** 06/05 - 85 -147 kW	**35-110651** **35-110668**	**24-069601** OIO	
B8	**1.8 16V, 1.9 D Multijet, 2.2 16V, 2.4 D Multijet** 06/05 - 85 -147 kW	**35-110675** **35-110682**	**24-069618** OIO	
B12 PK	**1.9 D Multijet, 2.2 16V** 06/05 - 85 -110 kW	**46-194152**		Conditions see certificates VA: lowering (expertise): 30-35 mm; axle load to: 1150 kg HA: lowering (expertise): 25-30 mm; axle load to: 1120 kg
B12 PK	**2.4 D Multijet** 06/05 - 147 kW	**46-194169**		Conditions see certificates VA: lowering (expertise): 30-35 mm; axle load to: 1200 kg HA: lowering (expertise): 25-30 mm; axle load to: 1120 kg
FIAT DOBLO (119)				
B1	**1.2, 1.2 16V, 1.3 D Multijet, 1.3 JTD, 1.4, 1.6, 1.6 16V, 1.6 Natural Power, 1.8, 1.9 D, 1.9 D Multijet, 1.9 JTD** 03/01 - 46 -88 kW	**12-226412** **12-226405**		VA: with ball bearing
B4	**1.2, 1.6, 1.6 Natural Power** 03/01 - 09/05 48 -76 kW	**22-122483**	**19-122496** OIO	with standard chassis

F

FIAT

FIAT DOBLO (119)

B4	**1.2, 1.2 16V, 1.3 D Multijet, 1.3 JTD, 1.4, 1.6, 1.6 16V, 1.6 Natural Power, 1.8, 1.9 D, 1.9 D Multijet, 1.9 JTD** 10/05 - 46 -88 kW	**22-172433**	**19-165547**	with standard chassis
B4	**1.6 16V, 1.9 D, 1.9 JTD** 03/01 - 09/05 46 -77 kW	**22-136251**	**19-122496**	

FIAT DOBLO Cargo (223)

B1	**1.2, 1.3 D Multijet, 1.3 JTD 16V, 1.3 JTD 16V Multijet, 1.4, 1.6 16V, 1.6 Natural Power, 1.9 D, 1.9 JTD, 1.9 JTD Multijet** 03/01 - 46 -88 kW	**12-226412** **12-226405**		VA: with ball bearing
B3	**1.2** 03/01 - 48 kW	**36-216840**		with standard chassis
B3	**1.4** 10/05 - 57 kW	**36-216840**		with standard chassis; To Payload 655 kg
B3	**1.4** 10/05 - 57 kW	**36-216857**		with standard chassis; To Payload 775 kg
B3	**1.6 16V** 10/01 - 12/05 76 kW	**36-216864**		with standard chassis
B3	**1.6 16V** 01/06 - 76 kW	**36-216864**		with standard chassis
B3	**1.6 Natural Power** 09/02 - 76 kW	**36-216871**		with standard chassis; To Payload 655 kg
B3	**1.3 JTD 16V** 05/04 - 51 kW	**36-216857**		with standard chassis
B3	**1.3 JTD 16V, 1.9 JTD** 07/03 - 51 -77 kW	**36-216888**		with standard chassis; Vehicle Production Country: Spain
B3	**1.3 JTD 16V, 1.9 JTD** 07/03 - 51 -77 kW	**36-216871**		with standard chassis; with AC; Vehicle Production Country: Spain
B3	**1.9 D** 03/01 - 12/01 46 kW	**36-216857**		with standard chassis
B3	**1.9 D** 01/02 - 46 kW	**36-216864**		with standard chassis
B3	**1.9 JTD** 10/01 - 74 -77 kW	**36-201068**		with standard chassis
B4	**1.2, 1.3 JTD 16V, 1.6 Natural Power** 03/01 - 09/05 48 -76 kW	**22-122483**	**19-122496**	with standard chassis
B4	**1.2, 1.3 D Multijet, 1.3 JTD 16V, 1.3 JTD 16V Multijet, 1.4, 1.6 16V, 1.6 Natural Power, 1.9 D, 1.9 JTD, 1.9 JTD Multijet** 10/05 - 46 -88 kW	**22-172433**	**19-165547**	with standard chassis
B4	**1.6 16V, 1.9 D, 1.9 JTD** 03/01 - 09/05 46 -77 kW	**22-136251**	**19-122496**	

FIAT DOBLO (152)

B1	**1.4, 1.4 Natural Power, 1.6 D 16V Multijet, 1.6 D Multijet, 2.0 D Multijet** 02/10 - 66 -99 kW	**12-226412** **12-226405**		VA: with ball bearing

FIAT

FIAT DOBLO (152)

B1	**1.3 D Multijet** 02/10 - 66 kW	**12-226412** **12-226405**		VA: with ball bearing; Engine Code: 263A2000

FIAT DOBLO Cargo (263)

B1	**1.4, 1.4 Natural Power, 1.6 D 16V Multijet, 1.6 D Multijet, 2.0 D Multijet** 02/10 - 66 -99 kW	**12-226412** **12-226405**		VA: with ball bearing
B1	**1.3 D Multijet** 02/10 - 66 kW	**12-226412** **12-226405**		VA: with ball bearing; Engine Code: 263A2000

FIAT DOBLO Cargo Flatbed / Chassis (263)

B1	**1.3 D Multijet, 1.4, 1.6 D Multijet, 2.0 D Multijet** 02/10 - 66 -99 kW	**12-226412** **12-226405**		VA: with ball bearing

FIAT FIORINO Box (146 Uno)

B4	**60 1.1, 60 1.7 D, 75 i.e. 1.5** 01/91 - 07/93 40 -55 kW	**22-046741**		CH.Nr.: 8149537 ->
B4	**60 1.1, 60 1.7 D, 70 i.e. 1.4, 75 i.e. 1.5** 07/93 - 05/01 40 -55 kW	**22-046741**	**19-061061** OIO	
B4	**65 1.7 TD, 70 1.3, 75 i.e. 1.6** 10/93 - 05/01 46 -55 kW	**22-046741**	**19-061061** OIO	

FIAT FIORINO Pick up (146)

B4	**1.4, 1.6, 1.7 D, 1.7 TD** 10/93 - 05/01 42 -55 kW	**22-046741**	**19-061061** OIO	
B4	**1.7 D** 01/91 - 07/93 44 kW	**22-046741**		CH.Nr.: 8149537 ->
B4	**1.7 D** 07/93 - 10/99 44 kW	**22-046741**	**19-061061** OIO	

FIAT FIORINO Box

B1	**1.4** 02/08 - 54 kW	**12-226504** **12-226481**		Engine Code: KFV VA: with ball bearing
B1	**1.3 D Multijet** 02/08 - 55 kW	**12-226504** **12-226481**		Engine Code: 199A2000 VA: with ball bearing
B1	**1.3 D Multijet, 1.4 Natural Power** 07/09 - 57 -70 kW	**12-226504** **12-226481**		VA: with ball bearing
B4	**1.3 D Multijet, 1.3 MPI, 1.4** 01/07 - 52 -70 kW	**22-189271** **22-189288**	**19-189291** OIO	

FIAT IDEA

B3	**1.2 16V** 01/04 - 59 kW	**36-201563**	**36-219506**	with standard chassis
B3	**1.4, 1.4 16V** 01/04 - 57 -70 kW	**36-201563**	**36-219506**	with standard chassis
B3	**1.3 JTD** 01/04 - 51 kW	**36-201686**	**36-219506**	with standard chassis
B3	**1.3 D Multijet, 1.9 JTD** 01/04 - 66 -74 kW		**36-219506**	with standard chassis

FIAT				
FIAT IDEA				
B4	**1.2 16V, 1.3 D Multijet, 1.3 JTD, 1.4, 1.4 16V, 1.4 LPG, 1.6 D Multijet, 1.8, 1.9 JTD** 12/03 - 51 -88 kW	22-166432	**19-158693**	
FIAT LINEA				
B1	**1.3 D Multijet, 1.4 T-Jet, 1.6 D Multijet** 06/07 - 66 -88 kW	**12-226504** **12-226481**		VA: with ball bearing
B4	**1.3 D Multijet, 1.4, 1.4 T-Jet, 1.6 D Multijet, 1.9 16V** 06/07 - 57 -112 kW	**22-158475** **22-158482**		with standard chassis; with sports suspension
FIAT MAREA (185)				
B1	**1.4 80 12V, 1.6 100 16V, 1.6 100 16V Bipower, 1.8 115 16V, 1.9 JTD 105, 1.9 JTD 110, 1.9 TD 100, 1.9 TD 75, 2.0 150 20V, 2.0 155 20V, 2.4 TD 125** 09/96 - 55 -113 kW	**12-116850**		VA: with ball bearing
B3	**1.2 16V, 1.4 80 12V, 1.6, 1.6 100 16V, 1.6 100 16V Bipower, 1.6 SX** 09/96 - 59 -78 kW	36-203239	**36-200023**	with standard chassis
B3	**1.2 16V, 1.4 80 12V, 1.6, 1.6 100 16V, 1.6 100 16V Bipower, 1.6 16V, 1.6 SX** 04/97 - 59 -78 kW	**36-199891**		with standard chassis; Heavy Duty Version .
B3	**1.8, 1.8 115 16V** 09/96 - 83 -97 kW	**36-199891**	**36-200023**	with standard chassis
B3	**1.8, 1.8 115 16V** 09/96 - 83 -97 kW	36-203246		with standard chassis; Heavy Duty Version .
B3	**2.0, 2.0 150 20V, 2.0 155 20V, 2.4** 04/99 - 108 -134 kW	**36-200030**	**36-200023**	with standard chassis
B3	**1.9 JTD 105, 1.9 JTD 110, 1.9 TD 100, 1.9 TD 75** 09/96 - 55 -81 kW	36-203246	**36-200023**	with standard chassis
B3	**1.9 JTD 105, 1.9 JTD 110, 1.9 TD 100, 1.9 TD 75** 09/96 - 55 -81 kW	**36-200030**		with standard chassis; Heavy Duty Version .
B3	**2.4 JTD 130, 2.4 TD 125** 09/96 - 91 -96 kW	**36-200030**	**36-200023**	with standard chassis
B4	**1.9 JTD 105, 1.9 JTD 110, 2.0 150 20V, 2.0 155 20V, 2.4 TD 125** 09/96 - 77 -113 kW	**22-046765**	**19-029269**	
FIAT MAREA Weekend (185)				
B1	**1.2 16V, 1.4 80 12V, 1.6, 1.6 100 16V, 1.8, 1.8 115 16V, 1.9 JTD 105, 1.9 JTD 110, 1.9 TD 100, 1.9 TD 75, 2.0, 2.0 150 20V, 2.0 155 20V, 2.4, 2.4 JTD 130, 2.4 TD 125** 09/96 - 55 -134 kW	**12-116850**		VA: with ball bearing
B3	**1.2 16V, 1.4 80 12V, 1.6, 1.6 100 16V** 09/96 - 59 -78 kW	36-203239	36-203253	with standard chassis
B3	**1.2 16V, 1.4 80 12V, 1.6, 1.6 100 16V** 09/96 - 59 -78 kW	**36-199891**		with standard chassis; Heavy Duty Version .
B3	**1.8, 1.8 115 16V** 09/96 - 83 -97 kW	**36-199891**	36-203253	with standard chassis

FIAT				
FIAT MAREA Weekend (185)				
B3	**1.8, 1.8 115 16V** 09/96 - 83 -97 kW	36-203246		with standard chassis; Heavy Duty Version .
B3	**2.0, 2.0 150 20V, 2.0 155 20V, 2.4** 04/99 - 108 -134 kW	**36-200030**	36-203253	with standard chassis
B3	**1.9 JTD 105, 1.9 JTD 110, 1.9 TD 100, 1.9 TD 75** 09/96 - 55 -81 kW	36-203246	36-203253	with standard chassis
B3	**1.9 JTD 105, 1.9 JTD 110, 1.9 TD 100, 1.9 TD 75** 09/96 - 55 -81 kW	**36-200030**		with standard chassis; Heavy Duty Version .
B3	**2.4 JTD 130, 2.4 TD 125** 09/96 - 91 -96 kW	**36-200030**	36-203253	with standard chassis
B4	**1.2 16V, 1.4 80 12V, 1.6, 1.6 100 16V, 1.8, 1.8 115 16V, 1.9 JTD 105, 1.9 JTD 110, 1.9 TD 100, 1.9 TD 75, 2.0, 2.0 150 20V, 2.4** 09/96 - 55 -134 kW	**22-046758**	**19-029269**	
B4	**2.0 150 20V, 2.0 155 20V, 2.4 JTD 130, 2.4 TD 125** 09/96 - 91 -113 kW	**22-046765**	**19-029269**	
FIAT MULTIPLA (186)				
B3	**1.6 16V Bipower, 1.6 16V Blupower** 04/99 - 70 -76 kW	36-217069		with standard chassis
B3	**1.6, 1.6 100 16V, 1.6 16V Blupower** 04/02 - 12/10 68 -76 kW	36-217052	36-217083	with standard chassis
B3	**1.9 JTD, 1.9 JTD 105, 1.9 JTD 110, 1.9 JTD 115** 03/01 - 77 -88 kW	36-217076	36-217083	with standard chassis
B4	**1.6, 1.6 100 16V, 1.9 JTD, 1.9 JTD 105, 1.9 JTD 110, 1.9 JTD 115** 07/02 - 68 -88 kW	**22-128287**	**19-128290**	
FIAT PALIO (178BX)				
B3	**1.2, 1.4, 1.4 CAT, 1.5, 1.6 16V** 04/96 - 51 -74 kW		36-217168	with standard chassis
B4	**1.0, 1.1, 1.2, 1.3, 1.3 JTD Multijet, 1.4, 1.4 CAT, 1.5, 1.6, 1.6 16V, 1.7 TD ED, 1.7 TD HL, 1.8, 1.9 D** 04/96 - 40 -85 kW	**22-119315**	**19-119328**	HA: mark: Heavy Duty
FIAT PALIO Weekend (178DX)				
B1	**1.0, 1.0 GLX, 1.2, 1.2 Biopower, 1.2 Flexfuel, 1.2 LPG, 1.4, 1.4 Biopower, 1.4 EL, 1.5, 1.6, 1.6 16V, 1.6 ED, 1.7 TD, 1.8, 1.9 D, 1.9 JTD EL** 09/01 - 44 -97 kW	**12-226412** **12-226405**		VA: with ball bearing
B1	**1.2** 02/01 - 44 kW	**12-226412** **12-226405**		VA: with ball bearing; Engine Code: 188A4000
B3	**1.2** 04/96 - 12/01 44 -59 kW	36-217120	36-214433	with standard chassis
B3	**1.6, 1.6 16V, 1.6 ED** 04/96 - 12/01 68 -76 kW	36-217113	36-214433	with standard chassis

FIAT

FIAT PALIO Weekend (178DX)

B3	**1.6, 1.6 16V, 1.6 ED** 07/97 - 12/01 68 -76 kW	**36-217106**	**36-214433**	with standard chassis; Heavy Duty Version .
B3	**1.7 TD, 1.9 D** 04/96 - 12/01 46 -53 kW	**36-217106**	**36-214433**	with standard chassis
B3	**1.7 TD, 1.9 D** 04/96 - 12/01 46 -51 kW	**36-217090**	**36-214433**	with standard chassis; Heavy Duty Version .
B4	**1.0 GLX, 1.2, 1.2 Flexfuel, 1.2 LPG, 1.4 EL, 1.6, 1.6 16V, 1.6 ED, 1.7 TD** 04/96 - 02/01 44 -76 kW	**22-119315**	**19-119335** OIO	
B4	**1.0, 1.0 GLX, 1.2, 1.2 Biopower, 1.2 Flexfuel, 1.2 LPG, 1.4, 1.4 Biopower, 1.4 EL, 1.5, 1.5 Bipower, 1.6, 1.6 16V, 1.6 ED, 1.7 TD, 1.8, 1.9 D, 1.9 JTD EL** 02/01 - 44 -97 kW		**19-119335** OIO	

FIAT PANDA (141A_)

B1	**1000, 1000 i.e. CAT, 1100, 1300 D, 750, 750 CAT, 800, 900, 950** 09/82 - 06/94 25 -40 kW	**12-116744**		VA: with ball bearing
B3	**0.9 Fire S All-wheel Drive, 1000, 1000 4x4, 1000 i.e. CAT, 1100, 1100 4x4, 1100 Trekking 4x4, 1300 D, 650, 750, 750 CAT, 800, 900, 950, 950 4x4** 10/80 - 12/99 22 -40 kW	**36-154692**		with standard chassis
B4	**650, 800, 900** 10/80 - 07/04 22 -33 kW	**22-040879**	*19-019390* OIO	
B4	**1000 4x4, 1100 4x4, 1100 Trekking 4x4, 950 4x4** 09/83 - 07/04 32 -40 kW	**i.V.**	**19-216942** OIO	with standard chassis
B4	**1000, 1000 i.e. CAT, 1100, 1300 D, 750, 750 CAT, 900, 950** 09/82 - 12/96 25 -40 kW	**22-040879**	**19-019833** OIO	

FIAT PANDA Van (141_)

B1	**1.1, 1000, 1000 i.e** 01/86 - 02/04 32 -40 kW	**12-116744**		VA: with ball bearing
B3	**1000, 1000 i.e, 750** 01/86 - 12/99 25 -33 kW	**36-154692**		with standard chassis
B4	**1.1, 1000, 1000 i.e, 750** 01/86 - 02/04 25 -40 kW	**22-040879**	**19-019833** OIO	

FIAT PANDA (169)

B1	**1.1, 1.2, 1.2 4x4, 1.3 D Multijet, 1.3 JTD, 1.3 JTD 4x4, 1.4** 09/03 - 40 -74 kW	**12-224234**		VA: with ball bearing
B3	**1.1, 1.2** 09/03 - 40 -51 kW	**36-202843**	**36-201013**	with standard chassis
B3	**1.3 D Multijet, 1.3 JTD, 1.4** 09/03 - 51 -74 kW	**36-201006**	**36-201013**	with standard chassis
B4	**1.1, 1.2, 1.2 LPG, 1.3 JTD** 09/03 - 40 -51 kW	**22-215482** **22-215505**	**19-142265** OIO	
B4	**1.2 4x4, 1.3 JTD 4x4** 10/04 - 44 -51 kW	**22-196934** **22-196941**	**19-197210** OIO	

FIAT				
FIAT PANDA (169)				
B4	**1.3 D Multijet, 1.4, 1.4 Bi-Power / Natural Power** 06/06 - 55 -74 kW	**22-196958** **22-196965**	**19-197227**	
FIAT PANDA Van (169)				
B1	**1.2, 1.3 JTD, 1.4 Natural Power** 03/04 - 44 -57 kW	**12-224234**		VA: with ball bearing
B4	**1.2, 1.3 JTD, 1.4 Natural Power** 03/04 - 44 -57 kW		**19-142265** OIO	
FIAT PUNTO (176)				
B1	**1.4 GT Turbo, 1.7 D, 1.7 TD, 55 1.1, 60 1.2, 60 TD 1.7, 75 1.2, 85 16V 1.2, 90 1.6** 01/94 - 09/99 40 -98 kW	**12-116843**		VA: with ball bearing
B3	**55 1.1** 09/93 - 09/99 40 kW	**36-215386**	**36-215430**	with standard chassis
B3	**60 1.2** 01/94 - 09/99 43 -44 kW	**36-215386**	**36-215430**	with standard chassis; manual transmission
B3	**60 1.2** 01/94 - 09/99 43 -44 kW	**36-215393**	**36-215447**	with standard chassis; automatic transmission
B3	**75 1.2, 85 16V 1.2** 10/93 - 09/99 54 -63 kW	**36-215393**	**36-215447**	with standard chassis
B3	**90 1.6** 01/94 - 04/97 65 kW	**36-215409**	**36-215447**	with standard chassis
B3	**90 1.6** 01/94 - 04/97 65 kW	**36-215416**	**36-215447**	with standard chassis; with AC
B3	**1.7 D** 04/94 - 09/97 42 kW	**36-215416**	**36-215447**	with standard chassis
B3	**1.7 TD, 60 TD 1.7** 01/94 - 09/99 46 -52 kW	**36-215423**	**36-215447**	with standard chassis
B4	**55 1.1, 60 1.2, 75 1.2, 85 16V 1.2, 90 1.6** 09/93 - 09/99 40 -65 kW	**22-045485**	**19-029238** OIO	
B4	**1.4 GT Turbo, 1.7 D, 1.7 TD, 60 TD 1.7** 01/94 - 09/99 42 -98 kW	**22-045492**	**19-029245** OIO	
B6 Sport	**1.4 GT Turbo, 1.7 D, 1.7 TD, 55 1.1, 60 1.2, 60 TD 1.7, 75 1.2, 85 16V 1.2** 10/93 - 09/99 40 -98 kW	**22-042552**	**24-024662** OIO	
B8	**1.4 GT Turbo, 1.7 D, 1.7 TD, 55 1.1, 60 1.2, 60 TD 1.7, 75 1.2, 85 16V 1.2** 10/93 - 09/99 40 -98 kW	**22-042569**	**24-024679** OIO	
FIAT PUNTO Convertible (176C)				
B1	**60 1.2, 85 16V 1.2, 90 1.6** 04/94 - 06/00 43 -65 kW	**12-116843**		VA: with ball bearing
B3	**60 1.2, 85 16V 1.2, 90 1.6** 04/94 - 06/00 43 -65 kW	**36-215416**	**36-215447**	with standard chassis
B3	**90 1.6** 04/94 - 04/97 65 kW	**36-215423**	**36-215447**	with standard chassis; with AC

F

FIAT

FIAT PUNTO Convertible (176C)

B4	**60 1.2, 85 16V 1.2, 90 1.6** 04/94 - 06/00 43 -65 kW	**22-045485**	**19-029245**	
B6 Sport	**60 1.2, 85 16V 1.2, 90 1.6** 04/94 - 06/00 43 -65 kW	**22-042552**	**24-024662**	
B8	**60 1.2, 85 16V 1.2, 90 1.6** 04/94 - 06/00 43 -65 kW	**22-042569**	**24-024679**	

FIAT PUNTO Van (176L)

B3	**1.7 D** 04/96 - 02/00 42 kW	**36-215416**	**36-215447**	with standard chassis
B3	**1.7 TD** 04/96 - 02/00 52 kW	**36-215423**	**36-215447**	with standard chassis

FIAT PUNTO (188)

B1	**1.2 16V 80, 1.2 60, 1.3 JTD 16V, 1.4, 1.8 130 HGT, 1.9 DS 60, 1.9 JTD, 1.9 JTD 80** 09/99 - 44 -96 kW	**12-224234**		VA: with ball bearing
B3	**1.2 60** 09/99 - 12/03 44 kW	**36-201693**	**36-214334**	with standard chassis; without AC
B3	**1.2 60** 09/99 - 12/03 44 kW	**36-201655**	**36-214334**	with standard chassis; with AC; equipment: SX / EL
B3	**1.2 60** 09/99 - 12/03 44 kW	**36-201624**	**36-214334**	with standard chassis; with AC; equipment: ELX
B3	**1.2 60** 01/04 - 44 kW	**36-201624**	**36-214334**	with standard chassis; without AC
B3	**1.2 60** 09/99 - 44 kW	**36-201655**	**36-214334**	with standard chassis
B3	**1.2 16V 80** 09/99 - 12/03 59 kW	**36-201624**	**36-214334**	with standard chassis; without AC; equipment: HLX / ELX
B3	**1.2 16V 80** 09/99 - 12/03 59 kW	**36-201655**	**36-214334**	with standard chassis; with AC; equipment: HLX / EL
B3	**1.2 16V 80** 09/99 - 12/03 59 kW	**36-201655**	**36-214334**	with standard chassis; with AC; equipment: ELX; manual transmission
B3	**1.2 16V 80** 01/04 - 59 kW	**36-201624**	**36-214334**	with standard chassis; without AC; manual transmission
B3	**1.2 16V 80** 01/04 - 59 kW	**36-201655**	**36-214334**	with standard chassis; without AC; automatic transmission
B3	**1.2 16V 80** 01/04 - 59 kW	**36-201655**	**36-214334**	with standard chassis; with AC; manual transmission
B3	**1.2 16V 80** 01/04 - 59 kW	**36-201532**	**36-214334**	with standard chassis; with AC; automatic transmission
B3	**1.4** 09/03 - 70 kW	**36-201655**	**36-214334**	with standard chassis; without AC; manual transmission
B3	**1.4** 09/03 - 70 kW	**36-201532**	**36-214334**	with standard chassis; without AC; automatic transmission
B3	**1.3 JTD 16V** 06/03 - 51 kW	**36-201532**	**36-214334**	with standard chassis; with AC

FIAT

FIAT PUNTO (188)

B3	**1.9 DS 60** 09/99 - 12/03 44 kW	**36-201457**	**36-214334**	with standard chassis; without AC
B3	**1.9 DS 60** 09/99 - 12/03 44 kW	**36-201570**	**36-214334**	with standard chassis; with AC
B3	**1.9 JTD 80** 09/99 - 12/03 59 kW	**36-201549**	**36-214334**	with standard chassis; with AC
B3	**1.9 JTD, 1.9 JTD 80** 09/99 - 12/03 59 -63 kW	**36-201570**	**36-214334**	with standard chassis; without AC
B3	**1.9 JTD** 01/04 - 63 kW	**36-201846**	**36-214334**	with standard chassis; with AC
B3	**1.9 JTD** 06/03 - 74 kW	**36-201518**	**36-214334**	with standard chassis
B4	**1.2 16V 80, 1.2 60** 09/99 - 44 -59 kW	**22-105349**	**19-105369** OIO	
B4	**1.3 JTD 16V, 1.4, 1.8 130 HGT, 1.9 DS 60, 1.9 JTD, 1.9 JTD 80** 09/99 - 44 -96 kW	**22-105356**	**19-105369** OIO	
B6 Sport	**1.2 16V 80, 1.2 60, 1.3 JTD 16V, 1.4, 1.8 130 HGT, 1.9 DS 60, 1.9 JTD, 1.9 JTD 80** 09/99 - 44 -96 kW	**35-046509**	**24-060646** OIO	
B8	**1.2 16V 80, 1.2 60, 1.3 JTD 16V, 1.4, 1.8 130 HGT, 1.9 DS 60, 1.9 JTD, 1.9 JTD 80** 09/99 - 44 -96 kW	**35-046547**	**24-060646** OIO	
B12 PK	**1.2 16V 80, 1.2 60, 1.3 JTD 16V, 1.4** 09/99 - 44 -70 kW	**46-192523**		Conditions see certificates VA: lowering (expertise): 25-30 mm; axle load to: 900 kg HA: lowering (expertise): 25 mm; axle load to: 870 kg
B12 PK	**1.8 130 HGT, 1.9 DS 60, 1.9 JTD, 1.9 JTD 80** 09/99 - 44 -96 kW	**46-192530**		Conditions see certificates VA: lowering (expertise): 25-30 mm; axle load to: 900 kg HA: lowering (expertise): 25 mm; axle load to: 870 kg
B12 SL	**1.2 16V 80, 1.2 60, 1.3 JTD 16V, 1.4, 1.8 130 HGT, 1.9 DS 60, 1.9 JTD, 1.9 JTD 80** 09/99 - 44 -96 kW	**46-192516**		Conditions see certificates VA: lowering (expertise): 45-50 mm; axle load to: 900 kg HA: lowering (expertise): 35-40 mm; axle load to: 750 kg

FIAT PUNTO Van (188AX)

B1	**1.2 60, 1.3 JTD, 1.9 D 60, 1.9 JTD** 02/00 - 44 -63 kW	**12-224234**		VA: with ball bearing
B3	**1.2 60** 02/00 - 12/02 44 kW	**36-201693**		with standard chassis
B3	**1.2 60** 01/03 - 44 kW	**36-201624**		with standard chassis
B3	**1.2 60** 02/00 - 44 kW	**36-201655**		with standard chassis; with AC
B3	**1.9 D 60** 02/00 - 12/02 44 kW	**36-201457**		with standard chassis
B3	**1.9 D 60** 02/00 - 12/02 44 kW	**36-201570**		with standard chassis; with AC
B3	**1.9 JTD** 02/00 - 12/02 63 kW	**36-201570**		with standard chassis

FIAT

FIAT PUNTO Van (188AX)

B4	**1.2 60, 1.3 JTD, 1.9 D 60, 1.9 JTD** 02/00 - 44 -63 kW	**22-105356**	**19-105369**	

FIAT GRANDE PUNTO (199)

B1	**1.4 Natural Power** 07/08 - 57 kW	**12-226504** **12-226481**	**12-226467** **12-226450**	VA: with ball bearing
B1	**1.3 D Multijet, 1.4, 1.4 16V, 1.4 T-Jet** 01/08 - 55 -88 kW	**12-226504** **12-226481**	**12-226467** **12-226450**	VA: with ball bearing
B1	**1.3 D Multijet** 04/10 - 62 kW	**12-226504** **12-226481**	**12-226467** **12-226450**	Engine Code: 199B4000 VA: with ball bearing
B1	**1.6 D Multijet, 1.9 D Multijet** 10/05 - 85 -96 kW		**12-226467** **12-226450**	HA: 01/09 ->
B3	**1.3 D Multijet, 1.6 D Multijet, 1.9 D Multijet** 10/05 - 51 -96 kW	**36-201723**	**36-217939**	with standard chassis
B4	**1.2, 1.3 D Multijet, 1.4, 1.4 16V, 1.4 Abarth, 1.4 LPG, 1.4 Natural Power, 1.4 T-Jet, 1.6 16V, 1.6 D Multijet, 1.8, 1.8 16V, 1.9 D Multijet** 10/05 - 48 -132 kW	**22-158475** **22-158482**	**19-158495**	with standard chassis; with sports suspension
B6 Sport	**1.2, 1.3 D Multijet, 1.4, 1.4 16V, 1.4 Abarth, 1.4 LPG, 1.4 Natural Power, 1.4 T-Jet, 1.6 16V, 1.6 D Multijet, 1.8, 1.8 16V, 1.9 D Multijet** 10/05 - 48 -132 kW	**35-140207** **35-140214**	**24-140225**	
B8	**1.2, 1.3 D Multijet, 1.4, 1.4 16V, 1.4 Abarth, 1.4 LPG, 1.4 Natural Power, 1.4 T-Jet, 1.6 16V, 1.6 D Multijet, 1.8, 1.8 16V, 1.9 D Multijet** 10/05 - 48 -132 kW	**35-140238** **35-140245**	**24-140256**	
B12 PK	**1.2, 1.4, 1.4 16V, 1.4 LPG, 1.4 Natural Power** 10/05 - 48 -70 kW	**46-188120**		Conditions see certificates VA: lowering (expertise): 25-30 mm; axle load to: 950 kg HA: without ride height adjustment; lowering (expertise): 30 mm; axle load to: 950 kg
B12 PK	**1.3 D Multijet, 1.4 16V, 1.4 Abarth, 1.4 T-Jet, 1.6 D Multijet, 1.9 D Multijet** 10/05 - 51 -132 kW	**46-188137**		Conditions see certificates VA: lowering (expertise): 25-30 mm; axle load to: 1000 kg HA: without ride height adjustment; lowering (expertise): 30 mm; axle load to: 950 kg
B12 SL	**1.2, 1.4, 1.4 16V, 1.4 LPG, 1.4 Natural Power, 1.4 T-Jet** 10/05 - 48 -112 kW	**46-188168**		Conditions see certificates VA: lowering (expertise): 40-45 mm; axle load to: 950 kg HA: without ride height adjustment; lowering (expertise): 30 mm; axle load to: 950 kg
B12 SL	**1.3 D Multijet, 1.4, 1.4 16V, 1.4 Abarth, 1.4 LPG, 1.4 Natural Power, 1.4 T-Jet, 1.6 D Multijet, 1.9 D Multijet** 10/05 - 51 -132 kW	**46-188175**		Conditions see certificates VA: lowering (expertise): 40-45 mm; axle load to: 1000 kg HA: without ride height adjustment; lowering (expertise): 30 mm; axle load to: 950 kg
B14	**1.2, 1.3 D Multijet, 1.4, 1.4 16V, 1.4 Abarth, 1.4 LPG, 1.4 Natural Power, 1.4 T-Jet, 1.6 16V, 1.6 D Multijet, 1.8, 1.8 16V, 1.9 D Multijet** 10/05 - 48 -132 kW	**47-164499**		Conditions see certificates VA: lowering (expertise): 35-45 mm; axle load to: 1000 kg HA: lowering (expertise): 20-45 mm; axle load to: 850 kg

FIAT GRANDE PUNTO Van (199)

B4	**1.3 D Multijet** 04/08 - 55 kW	**22-158475** **22-158482**	**19-158495**	with standard chassis; with sports suspension
B6 Sport	**1.3 D Multijet** 04/08 - 55 kW	**35-140207** **35-140214**	**24-140225**	

FIAT

FIAT GRANDE PUNTO Van (199)

B8	**1.3 D Multijet** 04/08 - 55 kW	**35-140238** **35-140245**	**24-140256**	

FIAT PUNTO EVO

B1	**1.2, 1.3 16V Multijet, 1.3 D Multijet, 1.4, 1.4 16V, 1.4 LPG, 1.4 Natural Power, 1.6 D Multijet** 06/09 - 48 -99 kW		**12-226467** **12-226450**	
B1	**1.3 D Multijet** 07/08 - 51 kW		**12-226467** **12-226450**	HA: 01/09 ->
B4	**1.2, 1.3 16V Multijet, 1.3 D Multijet, 1.4, 1.4 16V, 1.4 Natural Power, 1.6 D Multijet** 07/09 - 48 -99 kW	**22-158475** **22-158482**	**19-158495**	with standard chassis; with sports suspension
B6 Sport	**1.2, 1.3 16V Multijet, 1.3 D Multijet, 1.4, 1.4 16V, 1.4 Natural Power, 1.6 D Multijet** 07/09 - 48 -99 kW	**35-140207** **35-140214**	**24-140225**	
B8	**1.2, 1.3 16V Multijet, 1.3 D Multijet, 1.4, 1.4 16V, 1.4 Abarth, 1.4 Natural Power, 1.6 D Multijet** 07/09 - 48 -120 kW	**35-140238** **35-140245**	**24-140256**	
B12 PK	**1.2, 1.4, 1.4 16V, 1.4 Abarth, 1.4 Natural Power** 07/09 - 48 -120 kW	**46-188120**		Conditions see certificates VA: lowering (expertise): 25-30 mm; axle load to: 950 kg HA: without ride height adjustment; lowering (expertise): 30 mm; axle load to: 950 kg
B12 PK	**1.3 16V Multijet, 1.3 D Multijet, 1.6 D Multijet** 07/08 - 51 -88 kW	**46-188137**		Conditions see certificates VA: lowering (expertise): 25-30 mm; axle load to: 1000 kg HA: without ride height adjustment; lowering (expertise): 30 mm; axle load to: 950 kg
B12 SL	**1.2, 1.4, 1.4 16V, 1.4 Abarth, 1.4 Natural Power** 07/09 - 48 -120 kW	**46-188168**		Conditions see certificates VA: lowering (expertise): 40-45 mm; axle load to: 950 kg HA: without ride height adjustment; lowering (expertise): 30 mm; axle load to: 950 kg
B12 SL	**1.3 16V Multijet, 1.3 D Multijet, 1.6 D Multijet** 07/08 - 51 -88 kW	**46-188175**		Conditions see certificates VA: lowering (expertise): 40-45 mm; axle load to: 1000 kg HA: without ride height adjustment; lowering (expertise): 30 mm; axle load to: 950 kg
B14	**1.2, 1.3 16V Multijet, 1.3 D Multijet, 1.4, 1.4 16V, 1.4 Abarth, 1.4 Natural Power, 1.6 D Multijet** 07/09 - 48 -120 kW	**47-164499**		Conditions see certificates VA: lowering (expertise): 35-45 mm; axle load to: 1000 kg HA: lowering (expertise): 20-45 mm; axle load to: 850 kg

FIAT QUBO

B1	**1.4** 09/08 - 54 kW	**12-226504** **12-226481**		Engine Code: KFV VA: with ball bearing
B1	**1.3 D Multijet** 09/08 - 55 -70 kW	**12-226504** **12-226481**		VA: with ball bearing
B4	**1.3 D Multijet, 1.4** 09/08 - 54 -55 kW	**22-189271** **22-189288**	**19-189291**	

FIAT REGATA (138)

B4	**100 Super 1.6, 60 Diesel 1.7, 65 Diesel 1.9, 70 1.3, 75 1.5, 75 i.e. 1.5, 80 Turbo Diesel 1.9, 85 1.5, 85 1.6, 85 Super 1.5, 90 i.e. 1.6** 09/83 - 06/90 43 -74 kW	**22-040930** **11-101338** SP	*22-040763*	

FIAT

FIAT REGATA Weekend

B4	**100 1.6, 100 i.e. 1.6, 60 Diesel 1.7, 65 Diesel 1.9, 70 1.3, 75 1.5, 75 1.5 i.e. CAT, 80 Turbo Diesel 1.9, 85 1.5, 90 i.e. 1.6** 01/84 - 07/89 44 -74 kW	**22-040930** **11-101338** SP		

FIAT RITMO Bertone Convertible

B4	**100 1.6** 10/85 - 12/87 74 -77 kW	**22-040930** **11-101338** SP	*22-040763*	

FIAT RITMO I (138A)

B4	**105 Sport 1.6, 55 Diesel 1.7, 60 1.0, 65 1.3, 70 1.3, 75 1.3, 75 1.5, 75 i.e. 1.5, 85 1.5, 90 i.e. 1.6** 01/81 - 12/87 40 -77 kW	*22-040756*	*22-040763*	

FIAT RITMO II (138A)

B4	**1.6, 100 1.6, 105 1.6, 60 1.1, 60 Diesel 1.7, 70 1.3, 75 1.5, 75 1.5 CAT, 80 Turbo Diesel 1.9, 85 1.5, 90 1.6 i.e.** 01/83 - 12/88 40 -92 kW	**22-040930** **11-101338** SP	*22-040763*	

FIAT SCUDO Combinato (220P)

B1	**1.6, 1.9 D, 1.9 TD, 1.9 TD Eco, 2.0 16V, 2.0 JTD** 02/96 - 51 -100 kW	**12-117505** **12-117499**		VA: with ball bearing
B4	**1.6, 1.9 D, 1.9 TD, 1.9 TD Eco** 02/96 - 08/97 51 -68 kW	**22-046734**	**19-068022** OIO	-> CH.Nr.: 7608
B4	**1.6, 1.9 D, 1.9 TD, 1.9 TD Eco** 09/97 - 10/03 51 -68 kW	**22-046734**	**19-135106** OIO	CH.Nr.: 7609-> 9793
B4	**1.9 D, 2.0 16V, 2.0 JTD** 04/98 - 10/03 51 -100 kW	**22-046734**	**19-135106** OIO	-> CH.Nr.: 9793

FIAT SCUDO Box (220L)

B1	**1.6, 1.9 D, 1.9 TD, 2.0, 2.0 JTD** 02/96 - 51 -100 kW	**12-117505** **12-117499**		VA: with ball bearing
B4	**1.6, 1.9 D, 1.9 TD** 02/96 - 08/97 51 -66 kW	**22-046734**	**19-068022** OIO	-> CH.Nr.: 7608
B4	**1.6, 1.9 D, 1.9 TD** 09/97 - 10/03 51 -66 kW	**22-046734**	**19-135106** OIO	CH.Nr.: 7609-> 9793
B4	**1.9 D, 1.9 TD, 2.0, 2.0 JTD** 02/98 - 10/03 51 -100 kW	**22-046734**	**19-135106** OIO	-> CH.Nr.: 9793

FIAT SCUDO

B4	**1.6 D Multijet, 2.0 D Multijet** 01/07 - 66 -100 kW		**19-171203** OIO	

FIAT SCUDO Box

B4	**1.6 D Multijet, 2.0 D Multijet** 01/07 - 66 -100 kW		**19-171203** OIO	

FIAT SCUDO Flatbed / Chassis

B4	**1.6 D Multijet, 2.0 D Multijet** 01/07 - 66 -100 kW		**19-171203** OIO	

FIAT

FIAT SCUDO Flatbed / Chassis

FIAT SEDICI

B4	**1.6 16V, 1.9 D Multijet** 06/06 - 79 -88 kW	**i.V.** **i.V.**		**19-170428**	

FIAT SEICENTO (187)

B1	**0.9, 1.1** 01/98 - 29 -40 kW	**12-116836**			VA: with ball bearing
B3	**0.9, 1.1** 01/98 - 29 -40 kW	**36-164134**		**36-164127**	with standard chassis
B4	**0.9, 1.1** 01/98 - 29 -40 kW	**22-044839**		**19-103044**	
B6 Sport	**0.9, 1.1** 01/98 - 29 -40 kW	**i.V.**		**24-027045**	

FIAT SEICENTO Van (187)

B1	**0.9, 1.1** 01/98 - 29 -40 kW	**12-116836**			VA: with ball bearing
B3	**0.9, 1.1** 01/98 - 29 -40 kW	**36-164158**			with standard chassis
B3	**0.9, 1.1** 01/98 - 29 -40 kW	**36-164134**			with standard chassis; mark: gearbox code SA157
B4	**0.9, 1.1** 01/98 - 29 -40 kW	**22-044839**		**19-103044**	
B6 Sport	**0.9, 1.1** 01/98 - 29 -40 kW	**i.V.**		**24-027045**	

FIAT SIENA (178_)

B1	**1.0** 09/98 - 45 kW	**12-226412** **12-226405**			VA: with ball bearing; Engine Code: 178A1000
B1	**1.2, 1.6 16V** 09/98 - 54 -78 kW	**12-226412** **12-226405**			VA: with ball bearing
B4	**1.0, 1.0 Bipower, 1.2, 1.2 Bipower, 1.3 JTD, 1.4, 1.4 CAT, 1.4 Bipower, 1.5, 1.5 Bipower, 1.6, 1.6 16V, 1.7 TD, 1.8, 1.8 Bipower, 1.9 D** 04/96 - 44 -97 kW	**22-119315**		**19-119328**	HA: mark: Heavy Duty

FIAT STILO (192)

B3	**1.2 16V, 1.4 16V** 02/02 - 59 -70 kW	**36-201402**		36-300044	with standard chassis; Number of Doors: 3
B3	**1.2 16V, 1.4 16V** 02/02 - 59 -70 kW	**36-201402**		**36-300037**	with standard chassis; Number of Doors: 5
B3	**1.6, 1.6 16V** 10/01 - 76 -100 kW	**36-201525**		36-300044	with standard chassis; without AC; Number of Doors: 3
B3	**1.6, 1.6 16V** 10/01 - 76 -100 kW	**36-201648**		36-300044	with standard chassis; with AC; Number of Doors: 3
B3	**1.6, 1.6 16V** 10/01 - 76 -100 kW	**36-201525**		**36-300037**	with standard chassis; Number of Doors: 5

F

FIAT

FIAT STILO (192)

B3	**1.6, 1.6 16V** 10/01 - 76 -100 kW	**36-201648**	**36-300037**	with standard chassis; with AC; Number of Doors: 5
B3	**1.8, 1.8 16V** 10/01 - 76 -98 kW	**36-201501**	36-300044	with standard chassis; Number of Doors: 3
B3	**1.8, 1.8 16V** 10/01 - 76 -98 kW	**36-201501**	**36-300037**	with standard chassis; Number of Doors: 5
B3	**1.9 JTD** 02/02 - 05/04 59 kW	**36-201587**	36-300044	with standard chassis; Number of Doors: 3
B3	**1.9 JTD** 06/04 - 59 -85 kW	**36-201594**	36-300044	with standard chassis; Number of Doors: 3
B3	**1.9 JTD** 02/02 - 05/04 59 kW	**36-201587**	**36-300037**	with standard chassis; Number of Doors: 5
B3	**1.9 JTD** 06/04 - 59 -85 kW	**36-201600**	**36-300037**	with standard chassis; Number of Doors: 5
B3	**1.9 D Multijet, 1.9 JTD** 01/04 - 66 -110 kW	**36-201594**	36-300044	with standard chassis; Number of Doors: 3
B3	**1.9 D Multijet, 1.9 JTD** 01/04 - 66 -110 kW	**36-201600**	**36-300037**	with standard chassis; Number of Doors: 5
B3	**1.9 JTD** 10/01 - 05/04 85 kW	**36-201600**	36-300044	with standard chassis; Number of Doors: 3
B3	**1.9 JTD** 10/01 - 05/04 85 kW	**36-201600**	**36-300037**	with standard chassis; Number of Doors: 5
B4	**1.2 16V, 1.4 16V, 1.6, 1.6 16V, 1.8, 1.8 16V, 1.9 D Multijet, 1.9 JTD** 10/01 - 59 -100 kW	i.V. *22-113108*	**19-113098**	VA: fixing hole pitches at the front 58 mm
B6 Sport	**1.2 16V, 1.4 16V, 1.6, 1.6 16V, 1.8, 1.8 16V, 1.9 D Multijet, 1.9 JTD** 10/01 - 59 -100 kW	i.V. *22-158901*	**24-067911**	VA: fixing hole pitches at the front 58 mm
B6 Sport	**1.9 D Multijet, 1.9 JTD, 2.4 20V** 10/01 - 103 -125 kW	**35-156338**	**24-067911**	VA: fixing hole pitches at the front 75 mm
B8	**1.2 16V, 1.4 16V, 1.6, 1.6 16V, 1.8, 1.8 16V, 1.9 D Multijet, 1.9 JTD** 10/01 - 59 -100 kW	i.V. *22-158918*	**24-067928**	VA: fixing hole pitches at the front 58 mm
B8	**1.9 D Multijet, 1.9 JTD, 2.4 20V** 10/01 - 103 -125 kW	**35-156345**	**24-067928**	VA: fixing hole pitches at the front 75 mm
B12 PK	**1.2 16V, 1.4 16V, 1.6 16V, 1.9 D Multijet, 1.9 JTD** 10/01 - 59 -88 kW	**46-190963**		fixing hole pitches at the front 58 mm; Conditions see certificates VA: lowering (expertise): 30 mm; axle load to: 1020 kg HA: lowering (expertise): 30 mm; axle load to: 940 kg
B12 PK	**1.9 JTD** 10/01 - 85 -100 kW	**46-190987**		fixing hole pitches at the front 58 mm; Conditions see certificates VA: lowering (expertise): 30 mm; axle load to: 1030 kg HA: lowering (expertise): 30 mm; axle load to: 940 kg
B12 PK	**1.9 JTD, 2.4 20V** 10/01 - 103 -125 kW	**46-190994**		fixing hole pitches at the front 75 mm; Conditions see certificates VA: lowering (expertise): 30 mm; axle load to: 1030 kg HA: lowering (expertise): 30 mm; axle load to: 940 kg
B12 PK	**1.9 D Multijet** 09/05 - 110 kW	**46-190970**		fixing hole pitches at the front 75 mm; Conditions see certificates VA: lowering (expertise): 30 mm; axle load to: 1020 kg HA: lowering (expertise): 30 mm; axle load to: 940 kg
B12 SL	**1.2 16V, 1.4 16V, 1.6 16V, 1.8, 1.8 16V, 1.9 D Multijet, 1.9 JTD** 10/01 - 59 -98 kW	**46-191014**		fixing hole pitches at the front 58 mm; Conditions see certificates VA: lowering (expertise): 45-50 mm; axle load to: 1020 kg HA: lowering (expertise): 30 mm; axle load to: 940 kg

FIAT

FIAT STILO (192)

B12 SL	**2.4 20V** 10/01 - 123 -125 kW	**46-191038**		fixing hole pitches at the front 75 mm; Conditions see certificates VA: lowering (expertise): 45-50 mm; axle load to: 1030 kg HA: lowering (expertise): 30 mm; axle load to: 940 kg
B12 SL	**1.9 JTD** 10/01 - 85 kW	**46-191021**		fixing hole pitches at the front 58 mm; Conditions see certificates VA: lowering (expertise): 45-50 mm; axle load to: 1030 kg HA: lowering (expertise): 30 mm; axle load to: 940 kg
B12 SL	**1.9 D Multijet** 09/05 - 110 kW	**46-191007**		fixing hole pitches at the front 58 mm; Conditions see certificates VA: lowering (expertise): 45-50 mm; axle load to: 1020 kg HA: lowering (expertise): 30 mm; axle load to: 940 kg

FIAT STILO Multi Wagon (192)

B3	**1.4 16V** 01/04 - 66 -70 kW	**36-201402**	36-216345	with standard chassis
B3	**1.6 16V** 01/03 - 76 kW	**36-201525**	36-216338	with standard chassis
B3	**1.6 16V** 01/03 - 76 kW	**36-201648**	36-216338	with standard chassis; with AC
B3	**1.8, 1.8 16V** 01/03 - 76 -98 kW	**36-201501**	36-216338	with standard chassis
B3	**1.9 JTD** 01/03 - 59 kW	**36-201587**	36-216338	with standard chassis
B3	**1.9 D, 1.9 D Multijet, 1.9 JTD** 06/04 - 59 -88 kW	**36-201594**	36-216338	with standard chassis
B3	**1.9 JTD** 01/03 - 05/04 85 kW	**36-201600**	36-216338	with standard chassis
B3	**1.9 D Multijet, 1.9 JTD** 01/04 - 93 -110 kW	**36-201594**	36-216338	with standard chassis
B4	**1.4 16V, 1.6 16V, 1.8, 1.8 16V, 1.9 D, 1.9 D Multijet, 1.9 JTD** 01/04 - 59 -110 kW	i.V. *22-113108*	**19-140605**	VA: fixing hole pitches at the front 58 mm
B6 Sport	**1.4 16V, 1.6 16V, 1.8, 1.8 16V, 1.9 D, 1.9 D Multijet, 1.9 JTD** 01/04 - 59 -110 kW	i.V. *22-158901*	**24-102667**	VA: fixing hole pitches at the front 58 mm
B6 Sport	**2.4 20V** 01/04 - 123 kW	**35-156338**	**24-102667**	VA: fixing hole pitches at the front 75 mm
B8	**1.4 16V, 1.6 16V, 1.8, 1.8 16V, 1.9 D, 1.9 D Multijet, 1.9 JTD** 01/04 - 59 -110 kW	i.V. *22-158918*	**24-102674**	VA: fixing hole pitches at the front 58 mm
B8	**2.4 20V** 01/04 - 123 kW	**35-156345**	**24-102674**	VA: fixing hole pitches at the front 75 mm
B12 PK	**1.4 16V, 1.6 16V, 1.8, 1.8 16V, 1.9 D, 1.9 D Multijet, 1.9 JTD** 01/04 - 59 -110 kW	**46-191045**		fixing hole pitches at the front 58 mm; Conditions see certificates VA: lowering (expertise): 30 mm; axle load to: 1020 kg HA: lowering (expertise): 30 mm; axle load to: 980 kg
B12 PK	**1.9 JTD** 01/03 - 85 -103 kW	**46-191052**		fixing hole pitches at the front 58 mm; Conditions see certificates VA: lowering (expertise): 30 mm; axle load to: 1030 kg HA: lowering (expertise): 30 mm; axle load to: 980 kg

FIAT STRADA (178E)

B1	**1.2, 1.3 D Multijet, 1.7 TD, 1.9 D, 1.9 JTD** 12/00 - 44 -62 kW	**12-226412** **12-226405**		VA: with ball bearing

FIAT

FIAT TEMPRA (159)

B1	**1.4 i.e., 1.6, 1.6 i.e., 1.8 i.e., 1.9 D, 1.9 TD, 2.0 i.e.** 10/90 - 08/96 48 -83 kW	**12-117550** **12-117567**		VA: with ball bearing
B3	**1.4 i.e., 1.6, 1.6 i.e.** 06/90 - 08/96 51 -66 kW	**36-201792**	36-217618	with standard chassis; manual transmission
B3	**1.4 i.e., 1.6 i.e.** 01/94 - 08/96 51 -66 kW	36-217632		with standard chassis; Heavy Duty Version .; manual transmission
B3	**1.8 i.e., 1.9 D** 07/91 - 08/96 48 -81 kW	36-217625	36-217618	with standard chassis
B3	**1.8 i.e., 1.9 D** 07/91 - 12/93 48 -81 kW	**36-201808**		with standard chassis; Heavy Duty Version .
B3	**1.8 i.e.** 10/94 - 08/96 74 kW		36-217618	with standard chassis
B3	**1.9 TD, 2.0 i.e.** 10/90 - 08/96 59 -83 kW		36-217618	with standard chassis
B4	**1.4 i.e., 1.6, 1.6 i.e.** 06/90 - 08/96 51 -66 kW	**22-051813** **11-101499** *SP*	**19-019826** OIO	
B4	**1.8 i.e., 1.9 D, 1.9 TD, 2.0 i.e.** 10/90 - 08/96 48 -83 kW	**22-041005** **11-101499** *SP*	**19-019826** OIO	
B6 Sport	**1.4 i.e., 1.6, 1.6 i.e., 1.8 i.e., 1.9 D, 1.9 TD, 2.0 i.e.** 10/90 - 08/96 48 -83 kW	*22-040039*	**24-015714** OIO	HA: firmer setting
B8	**1.4 i.e., 1.6, 1.6 i.e., 1.8 i.e., 1.9 D, 1.9 TD, 2.0 i.e.** 10/90 - 08/96 48 -83 kW	*22-040398*	**24-018005** OIO	

FIAT TEMPRA S.W. (159)

B1	**1.4 i.e., 1.6, 1.6 i.e., 1.9 TD** 07/91 - 08/96 51 -66 kW	**12-117550** **12-117567**		VA: with ball bearing
B3	**1.4 i.e., 1.6, 1.6 i.e.** 10/90 - 08/96 51 -66 kW	**36-201792**	36-217649	with standard chassis; manual transmission
B3	**1.4 i.e., 1.6, 1.6 i.e.** 01/94 - 08/96 51 -66 kW	36-217632		with standard chassis; Heavy Duty Version .; manual transmission
B3	**1.8 i.e.** 09/93 - 08/96 66 kW	36-217625	36-217649	with standard chassis
B3	**1.8 i.e.** 09/93 - 12/93 66 kW	**36-201808**		with standard chassis; Heavy Duty Version .
B3	**1.8 i.e.** 10/94 - 08/96 74 kW		36-217649	with standard chassis
B3	**1.8 i.e., 1.9 D** 07/91 - 08/96 48 -81 kW	36-217625	36-217649	with standard chassis
B3	**1.8 i.e., 1.9 D** 07/91 - 12/93 48 -81 kW	**36-201808**		with standard chassis; Heavy Duty Version .
B3	**2.0 i.e.** 01/91 - 03/95 83 kW		36-217649	with standard chassis
B3	**1.9 TD** 07/91 - 02/95 59 -66 kW		36-217649	with standard chassis

FIAT

FIAT TEMPRA S.W. (159)

B4	**1.4 i.e., 1.6, 1.6 i.e.** 10/90 - 08/96 51 -66 kW	**22-051813** **11-101499** SP	**19-029269**	
B4	**1.8 i.e., 1.9 D, 1.9 TD, 2.0 i.e.** 01/91 - 08/96 48 -83 kW	**22-041005** **11-101499** SP	**19-029269**	
B6 Sport	**1.4 i.e., 1.6, 1.6 i.e., 1.8 i.e., 1.9 D, 1.9 TD, 2.0 i.e.** 01/91 - 08/96 48 -83 kW	*22-040039*	**24-015714**	HA: firmer setting
B8	**1.4 i.e., 1.6, 1.6 i.e., 1.8 i.e., 1.9 D, 1.9 TD, 2.0 i.e.** 01/91 - 08/96 48 -83 kW	*22-040398*	**24-018005**	

FIAT TIPO (160)

B3	**1.1, 1.4, 1.4 i.e., 1.6, 1.6 i.e., 1.6 SX DGT, 1.8 i.e., 1.8 i.e.16V Sport, 2.0 i.e., 2.0 i.e. 16V Sport** 07/87 - 04/95 41 -102 kW	**36-154715**	**36-154708**	with standard chassis
B4	**1.1, 1.4, 1.4 i.e., 1.6, 1.6 i.e., 1.6 SX DGT, 1.7 D, 1.9 D** 07/87 - 08/96 41 -66 kW	**22-051813** **11-101499** SP	**19-019826**	
B4	**1.8 i.e, 1.8 i.e., 1.8 i.e.16V Sport, 1.9 TD, 2.0, 2.0 i.e.** 03/90 - 04/95 59 -100 kW	**22-041005** **11-101499** SP	**19-019826**	
B6 Sport	**1.1, 1.4, 1.4 i.e., 1.6, 1.6 i.e., 1.6 SX DGT, 1.7 D, 1.8 i.e, 1.8 i.e., 1.8 i.e.16V Sport, 1.9 D, 1.9 TD, 2.0, 2.0 16V, 2.0 i.e., 2.0 i.e. 16V Sport** 07/87 - 04/95 41 -107 kW	*22-040039*	**24-015714**	HA: firmer setting
B8	**1.1, 1.4, 1.4 i.e., 1.6, 1.6 i.e., 1.6 SX DGT, 1.7 D, 1.8 i.e, 1.8 i.e., 1.8 i.e.16V Sport, 1.9 D, 1.9 TD, 2.0, 2.0 16V, 2.0 i.e., 2.0 i.e. 16V Sport** 07/87 - 04/95 41 -107 kW	*22-040398*	**24-018005**	

FIAT ULYSSE (220)

B1	**1.8, 1.9 TD, 2.0, 2.0 16V, 2.0 JTD, 2.0 Turbo, 2.1 TD** 03/96 - 08/02 66 -108 kW	**12-117505** **12-117499**		VA: with ball bearing
B3	**2.0, 2.0 16V** 06/94 - 08/02 89 -100 kW	**36-191536**		with standard chassis
B3	**2.0 Turbo** 06/94 - 08/02 108 kW	**36-191536**		with standard chassis; without AC
B4	**1.8, 1.9 TD, 2.0, 2.0 16V, 2.0 JTD, 2.0 Turbo, 2.1 TD** 03/96 - CH-Nr. 66 -108 kW	**22-046734**	**19-061054**	-> CH.Nr.: 7608
B4	**1.8, 1.9 TD, 2.0, 2.0 16V, 2.0 JTD, 2.0 Turbo, 2.1 TD** CH-Nr. - 08/02 66 -108 kW	**22-046734**	**19-110547**	CH.Nr.: 7609 ->

FIAT ULYSSE (179AX)

B1	**2.0, 2.0 D Multijet, 2.0 JTD, 2.2 D Multijet, 2.2 JTD, 3.0 V6** 08/02 - 79 -150 kW	**12-117505** **12-117499**		VA: with ball bearing
B4	**2.0, 2.0 D Multijet, 2.0 JTD, 2.2 D Multijet, 2.2 JTD, 3.0 V6** 08/02 - 79 -150 kW	**22-128225** **22-139122**	**19-128238**	

F

FIAT			
FIAT UNO (146A/E)			
B3 **0.9, 1.0, 1.0 iE, 1.3 Super Diesel, 1.3 Turbo i.e., 1.4, 1.4 DX, 1.4 Turbo, 1.4 Turbo i.e., 1.5 GX, 1.6, 1.6 R, 1.7 D, 45 0.9, 45 1.0, 45 i.e. 1.0, 50 1.1, 50 i.e. 1.1, 55 1.0, 55 1.1, 60 1.1, 60 Diesel 1.7, 70 1.3, 70 i.e. 1.4, 70 S 1.4, 70 TD 1.4, 75 i.e. 1.5** 01/83 - 12/93 30 -87 kW	**36-130498**	**36-133321**	with standard chassis
B4 **0.9, 1.0, 1.0 iE, 1.3 Super Diesel, 1.3 Turbo i.e., 1.4, 1.4 DX, 1.4 Turbo, 1.4 Turbo i.e., 1.5 GX, 1.6, 1.6 R, 1.7 D, 1.9 D, 45 0.9, 45 1.0, 45 i.e. 1.0, 50 1.1, 50 i.e. 1.1, 55 1.0, 55 1.1, 60 1.1, 60 Diesel 1.7, 70 1.3, 70 i.e. 1.4, 70 S 1.4, 70 TD 1.4, 75 i.e. 1.5** 01/83 - 12/93 30 -87 kW	**22-041173** **11-101338** SP	**19-019734**	
FIAT UNO (146 A/E)			
B3 **1.0, 1.2, 1.5** 08/00 - 40 -57 kW	**36-130498**	**36-133321**	with standard chassis
B4 **1.0, 1.2, 1.5** 08/00 - 40 -57 kW	**22-041173** **11-101338** SP	**19-019734**	
FIAT 125			
B6 Sport **1.6, 1.6 Special** 07/67 - 03/74 66 -74 kW	*24-005494*	*24-221726*	
MS **1.6, 1.6 Special** 07/67 - 03/74 66 -74 kW	**24-577700**	*24-577403*	
FIAT 126			
B6 Sport **600, 650, 700** 09/72 - 06/96 17 -22 kW	*24-007405*	*24-007504*	
MS **600, 650, 700** 09/72 - 06/96 17 -22 kW	*24-577410*		
FIAT 127			
B3 **0.9, 1.0, 1.0 Sport, 1.3 Diesel, 1.3 Sport** 06/71 - 12/86 29 -55 kW	**36-160730**		with standard chassis
B6 Sport **0.9, 1.0, 1.0 Sport, 1.3 Diesel, 1.3 Sport** 06/71 - 12/86 29 -55 kW		*34-000588*	HA: Quick Repair Service .; Used part return required .
FIAT 127 Panorama			
B3 **1.0, 1.3 Diesel** 01/77 - 12/86 33 -37 kW	**36-160730**		with standard chassis
B6 Sport **1.0, 1.3 Diesel** 01/77 - 12/86 33 -37 kW		*34-000588*	HA: Quick Repair Service .; Used part return required .
FIAT 128			
B4 **1.1, 1.3 Sport** 08/74 - 12/84 33 -44 kW		*22-040794*	
B6 Sport **1.1, 1.3 Sport** 08/74 - 12/84 33 -44 kW	*34-000533*	*34-000540*	VA: Quick Repair Service .; Used part return required . HA: Quick Repair Service .; Used part return required .

FIAT			
FIAT 128			
B6 Sport **1.3 Rally** 09/71 - 02/76 49 kW	*34-000557*	*34-000564*	VA: Quick Repair Service .; Used part return required . HA: Quick Repair Service .; Used part return required .
FIAT 128 Familiare			
B4 **1.1, 1.3** 12/74 - 10/82 33 -44 kW		*22-040794*	
FIAT 128 Coupe			
B4 **1.1, 1.3, 1.3 Berlinetta** 03/72 - 02/81 47 -55 kW		*22-040794*	
B6 Sport **1.1, 1.3, 1.3 Berlinetta** 03/72 - 02/81 47 -55 kW	*34-000533*	*34-000540*	VA: Quick Repair Service .; Used part return required . HA: Quick Repair Service .; Used part return required .
FIAT 132			
B4 **1.6, 1.7 GLS, 1.7 Special, 2.0, 2.0 D, 2.0 GLS, 2.0 i.e., 2.5 D** 01/76 - 12/82 44 -90 kW		*19-019291*	
FIAT 500			
B6 Sport **0.5, 0.6** 01/57 - 01/76 11 -13 kW	*24-007405*	*24-007504*	
FIAT 500			
B3 **1.2, 1.2 LPG** 10/07 - 51 kW	**36-199709**	**36-200771**	with standard chassis
B3 **1.2, 1.2 LPG, 1.3 D Multijet, 1.4** 10/07 - 51 -74 kW	**36-200757**	**36-200771**	with standard chassis; with electric power steering
B3 **1.2, 1.2 LPG, 1.3 D Multijet, 1.4** 10/07 - 51 -74 kW		**36-199686**	with standard chassis; Heavy Duty Version .
B3 **1.4** 10/07 - 74 kW	**36-199709**	**36-200771**	with standard chassis
B3 **1.4 Abarth** 08/08 - 99 -118 kW		**36-199686**	with standard chassis
B3 **1.3 D Multijet** 10/07 - 55 -70 kW	**36-200269**	**36-199686**	with standard chassis
B4 **0.9, 1.2, 1.2 LPG, 1.3 D Multijet, 1.4** 10/07 - 51 -74 kW	**22-197351** **22-197368**	**19-184104**	
B14 **0.9, 1.2, 1.2 LPG, 1.3 D Multijet, 1.4, 1.4 Abarth** 08/08 - 51 -140 kW	**47-155770**		Conditions see certificates VA: lowering (expertise): 20-40 mm; axle load to: 830 kg HA: lowering (expertise): 20-40 mm; axle load to: 640 kg
FIAT 500 C			
B3 **1.2** 09/09 - 51 kW	**36-199709**	**36-199686**	with standard chassis
B3 **1.2** 09/09 - 51 kW	**36-200757**	**36-199686**	with standard chassis; with electric power steering
B3 **1.4** 09/09 - 74 kW	**36-199709**	**36-199686**	with standard chassis
B3 **1.4** 09/09 - 74 kW	**36-200757**	**36-199686**	with standard chassis; with electric power steering

FIAT				
FIAT 500 C				
B4	**0.9, 1.2, 1.3 D Multijet, 1.4** 09/09 - 51 -74 kW	**22-197351** **22-197368**	**19-184104** OIO	with standard chassis
B14	**0.9, 1.2, 1.3 D Multijet, 1.4, 1.4 Abarth** 09/09 - 51 -103 kW	**47-155770**		Conditions see certificates VA: lowering (expertise): 20-40 mm; axle load to: 830 kg HA: lowering (expertise): 20-40 mm; axle load to: 640 kg
FIAT 600				
B6 Sport	**0.6, 0.8** 03/55 - 02/71 15 -17 kW	*24-007405*	*24-007504*	
FIAT DUCATO Panorama (280)				
B4	**1.8, 1.9 D, 1.9 TD, 2.0, 2.4 D, 2.5 D, 2.5 TD** 07/82 - 08/90 51 -68 kW		**19-065625** OIO	
FIAT DUCATO Box (280)				
B4	**1.8, 1.9 D, 1.9 TD, 2.0, 2.4 D, 2.5 D** 01/82 - 08/90 49 -62 kW		**19-065625** OIO	equipment: ex. 18, 18Q
B4	**1.8, 1.9 D, 1.9 TD, 2.0, 2.4 D, 2.5 D** 01/82 - 08/90 49 -62 kW		**19-065618** OIO	equipment: 18, 18Q
FIAT DUCATO Flatbed / Chassis (280)				
B4	**2.5 TD** 01/86 - 08/90 68 kW		**19-065601** OIO	
FIAT DUCATO Panorama (290)				
B4	**1.9 D, 1.9 TD, 2.0, 2.0 4x4, 2.5 TD 4x4** 06/90 - 05/94 52 -70 kW		**19-065625** OIO	
B4	**2.5 D, 2.5 D 4x4, 2.5 TD, 2.5 TD 4x4** 07/90 - 03/94 55 -70 kW		**19-065618** OIO	
FIAT DUCATO Box (290)				
B1	**1.9 D, 1.9 TD, 2.5 D 4x4, 2.5 TD, 2.5 TD 4x4** 03/89 - 03/94 52 -70 kW	**12-117536** **12-117529**		VA: with ball bearing
B4	**2.0 4x4, 2.5 D 4x4, 2.5 TD, 2.5 TD 4x4** 06/90 - 05/94 55 -70 kW		**19-065618** OIO	VA: mark: ex. Typ 18, 18Q Maxi
B4	**1.9 D, 1.9 TD** 03/89 - 03/94 52 -60 kW		**19-065625** OIO	VA: mark: ex. Typ 18, 18QMaxi
FIAT DUCATO Flatbed / Chassis (290)				
B4	**1.9 TD, 2.0, 2.5 D, 2.5 TD** 03/89 - 03/94 55 -70 kW		**19-065632** OIO	with standard chassis; for campers
B4	**1.9 TD, 2.0, 2.5 D, 2.5 TD** 03/89 - 03/94 55 -70 kW		**19-065601** OIO	with standard chassis

FIAT				
FIAT DUCATO Bus (230)				
B1	**1.9 D, 1.9 D Combinato, 1.9 TD, 1.9 TD Combinato, 1.9 TD Panorama/Combinato, 2.0 JTD, 2.0 Panorama/Combinato, 2.5 D Combinato, 2.5 TDI 4x4, 2.5 TDI Combinato, 2.5 TDI Panorama/Combinato, 2.8 D, 2.8 JTD, 2.8 JTD 4x4, 2.8 TDI, 2.8 TDI 4x4** 10/97 - 04/02 50 -94 kW	**12-117536** **12-117529**		VA: with ball bearing
B2	**1.9 D, 1.9 D Combinato, 1.9 TD, 1.9 TD Combinato, 1.9 TD Panorama/Combinato, 2.0, 2.0 JTD, 2.0 Panorama/Combinato, 2.5 D Combinato, 2.5 TD, 2.5 TDI 4x4, 2.5 TDI Combinato, 2.5 TDI Panorama/Combinato, 2.8 D, 2.8 JTD, 2.8 TDI, 2.8 TDI 4x4** 10/97 - 04/02 50 -94 kW		**15-122582** OIO	mark: 10Q, 14Q
B4	**1.9 D, 1.9 D Combinato, 1.9 TD, 1.9 TD Panorama/Combinato, 2.0, 2.0 JTD, 2.0 Panorama/Combinato, 2.5 TD, 2.5 TDI 4x4, 2.5 TDI Panorama/Combinato, 2.8 D, 2.8 JTD, 2.8 TDI, 2.8 TDI 4x4** 10/97 - 04/02 50 -94 kW	**22-136244**	**19-065656** OIO	with standard chassis; To Payload 1400 kg
B4	**1.9 TD Combinato, 2.5 D Combinato, 2.5 TDI Combinato** 08/94 - 04/02 59 -80 kW	**22-136244**	**19-065663** OIO	HA: mark: 14Q
FIAT DUCATO Box (230L)				
B1	**1.9 D, 1.9 TD, 1.9 TD CAT, 2.0, 2.0 JTD, 2.5 D, 2.5 TDI, 2.5 TDI 4x4, 2.5 TDI Maxi, 2.8 D, 2.8 D 4x4, 2.8 JTD, 2.8 JTD 4x4, 2.8 TDI, 2.8 TDI 4x4** 10/97 - 04/02 50 -94 kW	**12-117536** **12-117529**		VA: with ball bearing
B2	**1.9 D, 1.9 TD, 1.9 TD CAT, 2.0, 2.5 D, 2.5 TDI, 2.5 TDI 4x4, 2.8 D, 2.8 D 4x4, 2.8 TDI, 2.8 TDI 4x4** 10/97 - 04/02 50 -90 kW		**15-122582** OIO	mark: 10Q, 14Q
B4	**1.9 D, 1.9 TD, 1.9 TD CAT, 2.0, 2.5 D, 2.5 TDI, 2.5 TDI 4x4, 2.5 TDI Maxi, 2.8 D, 2.8 TDI, 2.8 TDI 4x4** 10/97 - 04/02 50 -90 kW	**22-136244**	**19-065656** OIO	with standard chassis; To Payload 1400 kg
B4	**1.9 D, 1.9 TD, 1.9 TD CAT, 2.0, 2.5 D, 2.5 TDI, 2.5 TDI 4x4, 2.5 TDI Maxi, 2.8 D, 2.8 TDI, 2.8 TDI 4x4** 10/97 - 04/02 50 -90 kW	**22-136244**	**24-168731** OIO	with standard chassis; To Payload 1800 kg
B4	**1.9 D, 1.9 TD, 1.9 TD CAT, 2.0, 2.5 D, 2.5 TDI, 2.5 TDI 4x4, 2.5 TDI Maxi, 2.8 D, 2.8 TDI, 2.8 TDI 4x4** 10/97 - 04/02 50 -90 kW	**22-136244**	**24-168748** OIO	To Payload 1800 kg; for campers
FIAT DUCATO Flatbed / Chassis (230)				
B1	**1.9 D, 1.9 TD, 1.9 TD CAT, 2.0, 2.5 D, 2.5 D 4x4, 2.5 TDI, 2.5 TDI 4x4, 2.8 D, 2.8 JTD, 2.8 TDI** 02/98 - 04/02 50 -94 kW	**12-117536** **12-117529**		VA: with ball bearing
B2	**1.9 D, 1.9 TD, 1.9 TD CAT, 2.0, 2.5 D, 2.5 D 4x4, 2.5 TDI, 2.5 TDI 4x4, 2.8 D, 2.8 TDI** 02/98 - 04/02 50 -90 kW		**15-122582** OIO	To Payload 1400 kg

FIAT				
FIAT DUCATO Flatbed / Chassis (230)				
B4	**1.9 D, 1.9 TD, 1.9 TD CAT, 2.0, 2.5 D, 2.5 TDI, 2.8 D, 2.8 TDI** 02/98 - 04/02 50 -90 kW	**22-136244**	**19-065656**	with standard chassis; To Payload 1400 kg
B4	**1.9 D, 1.9 TD, 1.9 TD CAT, 2.0, 2.5 D, 2.5 D 4x4, 2.5 TDI, 2.5 TDI 4x4, 2.8 D, 2.8 TDI** 02/98 - 04/02 50 -90 kW	**22-136244**	**24-168731**	with standard chassis; To Payload 1800 kg
B4	**1.9 D, 1.9 TD, 1.9 TD CAT, 2.0, 2.5 D, 2.5 D 4x4, 2.5 TDI, 2.5 TDI 4x4, 2.8 D, 2.8 TDI** 02/98 - 04/02 50 -90 kW	**22-136244**	**24-168748**	To Payload 1800 kg; for campers
B4	**2.5 D 4x4, 2.5 TDI 4x4** 03/94 - 04/02 62 -85 kW		**19-065656**	
FIAT DUCATO Bus (244, Z_)				
B4	**2.0, 2.0 Bipower, 2.0 JTD, 2.3 JTD, 2.8 JTD, 2.8 TD, 2.8 TDS** 04/02 - 62 -107 kW	**22-136244**	**19-065656**	with standard chassis; To Payload 1400 kg
FIAT DUCATO Box (244)				
B4	**2.0, 2.0 Bipower, 2.0 JTD, 2.3 JTD, 2.8 JTD, 2.8 JTD Power, 2.8 TD, 2.8 TDS** 04/02 - 62 -107 kW	**22-136244**	**19-065656**	To Payload 1400 kg
FIAT DUCATO Flatbed / Chassis (244)				
B4	**2.0 JTD, 2.3 JTD, 2.8 JTD, 2.8 JTD Power, 2.8 TDS** 04/02 - 62 -107 kW	**22-136244**	**19-065656**	To Payload 1400 kg
FIAT DUCATO Bus (250)				
B4	**100 Multijet 2,2 D, 120 Multijet 2,3 D, 130 Multijet 2,3 D, 140 Natural Power 3,0, 150 Multijet 3,0 D, 160 Multijet Power 3,0 D, 2.0 D 115 Multijet, 2.3 150 D Multijet, 3.0 D Multijet** 07/06 - 74 -130 kW	**i.V.**	**19-183398**	mark: Light 11-15 Q
B4	**100 Multijet 2,2 D, 120 Multijet 2,3 D, 130 Multijet 2,3 D, 140 Natural Power 3,0, 150 Multijet 3,0 D, 160 Multijet Power 3,0 D, 2.0 D 115 Multijet, 2.3 150 D Multijet, 3.0 D Multijet** 07/06 - 74 -130 kW	**i.V.**	**19-183398**	mark: Light 17-18 Q
FIAT DUCATO Box (250)				
B4	**100 Multijet 2,2 D, 120 Multijet 2,3 D, 140 Natural Power, 150 Multijet 3,0 D, 160 Multijet Power 3,0 D, 2.0 D 115 Multijet, 2.3 150 D Multijet, 3.0 D Multijet** 07/06 - 74 -130 kW	**i.V.**	**19-183398**	mark: Light 11-15 Q
B4	**100 Multijet 2,2 D, 120 Multijet 2,3 D, 140 Natural Power, 150 Multijet 3,0 D, 160 Multijet Power 3,0 D, 2.0 D 115 Multijet, 2.3 150 D Multijet, 3.0 D Multijet** 07/06 - 74 -130 kW	**i.V.**	**19-183398**	mark: Light 17-18 Q

FIAT				
FIAT DUCATO Flatbed / Chassis (250)				
B4	**100 Multijet 2,2 D, 120 Multijet 2,3 D, 130 Multijet 2,3 D, 150 Multijet 3,0 D, 160 Multijet Power 3,0 D, 2.0 D 115 Multijet, 2.3 150 D Multijet, 3.0 D Multijet** 07/06 - 74 -130 kW	**i.V.**	**19-183398**	mark: Light 11-15 Q
B4	**100 Multijet 2,2 D, 120 Multijet 2,3 D, 130 Multijet 2,3 D, 150 Multijet 3,0 D, 160 Multijet Power 3,0 D, 2.0 D 115 Multijet, 2.3 150 D Multijet, 3.0 D Multijet** 07/06 - 74 -130 kW	**i.V.**	**19-183398**	mark: Light 17-18 Q
FORD				
FORD CAPRI (ECJ)				
B3	**1300, 1600, 1600 GT** 01/69 - 02/74 35 -65 kW	**36-164110**		with standard chassis
B6 Sport	**1300, 1500, 1700, 2000, 2300, 2600, 3000** 01/72 - 02/74 35 -103 kW	**34-001103**		
FORD CAPRI II (GECP)				
B6 Sport	**1.3, 1.6, 2.0, 2.3, 3.0** 02/74 - 12/77 40 -101 kW	**34-001103**		
FORD CAPRI III (GECP)				
B6 Sport	**1.3, 1.6, 2.0, 2.3 Super, 3.0** 01/78 - 12/85 40 -101 kW	**34-001103**	*24-007641*	
FORD CONSUL (GGFL)				
B3	**1700, 2000** 01/72 - 12/75 48 -73 kW	*36-202706*		with standard chassis
FORD CONSUL Turnier (GGNL)				
B3	**1700, 2000** 01/72 - 12/75 48 -73 kW	*36-202706*		with standard chassis
FORD CONSUL Coupe (GGCL)				
B3	**1700, 2000** 01/72 - 12/75 48 -73 kW	*36-202706*		with standard chassis
FORD CORTINA Saloon				
B3	**1.3** 09/79 - 08/82 44 kW	*36-202713*		with standard chassis
FORD ESCORT I (AFH, ATH)				
B3	**1100, 1300, 1300 GT, 950** 01/68 - 08/74 25 -53 kW	**36-181438**		with standard chassis
B6 Sport	**1.6, 1100, 1300, 1300 GT, Mexico, RS 1600, Twin Cam** 03/68 - 08/73 29 -90 kW		**24-007733**	
B6 Sport	**1.6, 1100, 1300, 950, Mexico** 09/73 - 10/75 25 -63 kW		**24-008723**	

F

FORD				
FORD ESCORT I Estate (ADH)				
B3	**1100, 1300** 06/68 - 02/76 29 -42 kW	**36-181438**		with standard chassis
FORD ESCORT II (ATH)				
B3	**1.1, 1.3** 12/74 - 08/80 32 -51 kW	**36-181438**	**36-129829**	with standard chassis
B6 Sport	**1.1, 1.3, 1.8** 12/74 - 08/80 32 -115 kW	**34-001011**	**24-008723**	
B6 Sport	**1.6 RS, 2.0 RS, 2.0 RS Rear Wheel Drive, RS 1800** 03/73 - 08/80 62 -92 kW		**24-008723**	
B6 Sport	**2.0 RS** 03/73 - 08/73 73 kW		**24-007733**	
MS	**1.6 RS, 2.0 RS, 2.0 RS Rear Wheel Drive, RS 1800** 03/73 - 08/80 62 -92 kW		**24-008716**	mark: Rallye
MS	**1.6 RS, 2.0 RS, 2.0 RS Rear Wheel Drive, RS 1800** 03/73 - 08/80 62 -92 kW		**24-007672**	mark: Gruppe 4
MS	**1.6 RS, 2.0 RS, 2.0 RS Rear Wheel Drive, RS 1800** 03/73 - 08/80 62 -92 kW		**24-021906**	mark: Gruppe 4; charakteristic: 220N /110N
FORD ESCORT II Estate				
B3	**1.1, 1.3** 04/75 - 07/81 32 -42 kW		**36-159321**	with standard chassis
FORD ESCORT III (GAA)				
B2	**1.1, 1.3, 1.6, 1.6 i** 05/83 - 07/86 37 -66 kW	**17-053273** **11-101338** SP		
B2	**1.6 D** 02/84 - 12/85 40 kW	**17-053273** **11-101338** SP		
B3	**1.1, 1.3, 1.6, 1.6 i** 01/83 - 07/86 37 -66 kW	**36-133338**	**36-129829**	with standard chassis; manual transmission
B3	**1.1, 1.3, 1.6, 1.6 i** 01/83 - 07/86 37 -66 kW	**36-133345**	**36-129829**	with standard chassis; automatic transmission
B3	**1.1, 1.3, 1.6, 1.6 D, 1.6 i** 01/83 - 07/86 37 -66 kW	**36-133352**		with standard chassis; Heavy Duty Version .
B3	**1.1, 1.3, 1.6** 09/80 - 01/83 40 -71 kW	**36-159284**	*36-159345*	with standard chassis
B3	**1.6 XR3i** 09/81 - 12/85 77 -81 kW	**36-159314**	*36-159345*	with standard chassis
B3	**1.6 RS Turbo, 1.7 Turbo RS, RS 1600i** 05/82 - 02/86 85 -147 kW		**36-159147**	with standard chassis
B3	**1.6 D** 01/83 - 12/85 40 kW	**36-133345**	**36-129829**	with standard chassis
B4	**1.1, 1.3, 1.6, 1.6 D, 1.6 i** 05/83 - 07/86 37 -66 kW	**22-040893** **11-101338** SP	**22-040862**	
B4	**1.1, 1.3, 1.6** 09/80 - 04/83 40 -71 kW	*22-040855* **11-101338** SP	**22-040862**	

FORD

FORD ESCORT III (GAA)

B4	**1.6 RS Turbo, 1.6 XR3i** 09/81 - 02/86 77 -97 kW	**22-040893**		
B6 Sport	**1.1, 1.3, 1.6, 1.6 XR3i** 09/80 - 04/83 40 -81 kW	*35-000396*		

FORD ESCORT III Estate (AWA)

B2	**1.1, 1.3, 1.6, 1.6 D** 05/83 - 12/85 37 -58 kW	**17-053273** **11-101338** SP		
B3	**1.1, 1.6 D** 08/83 - 12/85 37 -40 kW	**36-133345**		with standard chassis
B3	**1.1, 1.3, 1.6** 09/80 - 01/83 40 -58 kW		**36-159321**	with standard chassis
B3	**1.3, 1.6** 02/83 - 12/85 51 -58 kW	**36-133345**	**36-159321**	with standard chassis
B4	**1.1, 1.3, 1.6, 1.6 D** 05/83 - 12/85 37 -58 kW	**22-040893** **11-101338** SP	**22-040862**	
B4	**1.1, 1.3, 1.6** 09/80 - 04/83 40 -58 kW	*22-040855* **11-101338** SP	**22-040862**	
B6 Sport	**1.1, 1.3, 1.6** 09/80 - 04/83 40 -58 kW	*35-000396*		

FORD ESCORT IV (GAF, AWF, ABFT)

B2	**1.1, 1.3, 1.4, 1.6, 1.6 D, 1.6 i, 1.8 D** 10/85 - 10/90 37 -75 kW	**17-053273** **11-101338** SP		
B3	**1.1, 1.3, 1.6** 12/85 - 10/90 37 -65 kW	**36-129898**	**36-129829**	with standard chassis
B3	**1.1, 1.3, 1.6, 1.6 D, 1.6 i, 1.8 D** 12/85 - 10/90 37 -75 kW	**36-159222**	**36-133376**	with standard chassis; Heavy Duty Version .
B3	**1.4** 01/86 - 07/90 54 -55 kW	**36-129898**	**36-129829**	with standard chassis
B3	**1.4** 01/86 - 07/90 54 -55 kW			with standard chassis; Heavy Duty Version .
B3	**1.6 i** 01/86 - 07/90 66 -75 kW	**36-133352**	**36-129829**	with standard chassis
B3	**1.6 XR3i** 01/86 - 08/89 77 kW	**36-159123**	**36-159147**	with standard chassis
B3	**1.6 Turbo RS** 01/86 - 07/90 97 kW		**36-159147**	with standard chassis
B3	**1.6 D, 1.8 D** 01/86 - 07/90 40 -44 kW	**36-133369**	**36-129829**	with standard chassis
B4	**1.1, 1.3, 1.4, 1.6, 1.6 D, 1.6 i, 1.8 D** 10/85 - 10/90 37 -75 kW	**22-040893** **11-101338** SP	**22-040862**	
B4	**1.6 Turbo RS, 1.6 XR3i** 01/86 - 07/90 77 -97 kW	**22-040893**		

FORD ESCORT IV Estate (AWF, AVF)

B2	**1.1, 1.3, 1.4, 1.6, 1.6 D, 1.6 i, 1.8 D** 10/85 - 10/90 37 -66 kW	**17-053273** **11-101338** SP		

FORD

FORD ESCORT IV Estate (AWF, AVF)

B3	**1.1, 1.3, 1.6** 10/85 - 09/90 37 -58 kW	**36-129898**	**36-133376**	with standard chassis
B3	**1.1, 1.3, 1.6, 1.6 D, 1.6 i, 1.8 D** 10/85 - 09/90 37 -66 kW	**36-129898**	**36-133376**	with standard chassis; Heavy Duty Version .
B3	**1.4** 01/86 - 07/90 54 -55 kW	**36-129898**	**36-133376**	with standard chassis; Heavy Duty Version .
B3	**1.6 D, 1.8 D** 01/86 - 07/90 40 -44 kW	**36-133369**	**36-133376**	with standard chassis
B4	**1.1, 1.3, 1.4, 1.6, 1.6 D, 1.6 i, 1.8 D** 10/85 - 10/90 37 -66 kW	**22-040893** **11-101338** SP	**22-040862**	

FORD ESCORT IV Convertible (ALF)

B2	**1.4, 1.6, 1.6 i** 01/86 - 07/90 54 -75 kW	**17-053273** **11-101338** SP		
B3	**1.4, 1.6, 1.6 i, 1.6 XR3i** 01/86 - 07/90 54 -77 kW	**36-159123**	**36-159147**	with standard chassis
B4	**1.4, 1.6, 1.6 i** 01/86 - 07/90 54 -75 kW	**22-040893** **11-101338** SP	**22-040862**	

FORD ESCORT V (GAL)

B1	**1.3, 1.4, 1.6, 1.8 16V XR3i, 1.8 D, RS 2000** 07/90 - 12/92 44 -110 kW	**12-116669**		VA: with ball bearing
B3	**1.3, 1.6** 07/90 - 12/92 44 -77 kW	**36-129898**	**36-129829**	with standard chassis
B3	**1.4** 07/90 - 09/92 52 kW	**36-133390**	**36-203277**	with standard chassis; manual transmission
B3	**1.4** 07/90 - 09/92 52 kW		**36-129911**	with standard chassis; Heavy Duty Version .
B3	**1.8 16V XR3i** 02/92 - 12/92 77 -96 kW	**36-203260**	**36-203277**	with standard chassis
B3	**RS 2000** 05/91 - 12/92 110 kW		**36-203277**	with standard chassis
B3	**1.8 D** 07/90 - 12/92 44 kW	**36-133369**	**36-129829**	with standard chassis
B4	**1.3** 07/90 - 09/92 44 kW	**22-041135** **11-101338** SP	**19-019994** OIO	
B4	**1.4, 1.6, 1.8 D** 07/90 - 10/90 44 -77 kW	**22-041135** **11-101338** SP	**19-019994** OIO	
B4	**1.4, 1.6, 1.8 D** 11/90 - 12/92 44 -77 kW	**22-041159** **11-101338** SP	**19-019994** OIO	
B4	**1.8 16V XR3i, RS 2000** 05/91 - 12/92 77 -110 kW	**22-041159** **11-101338** SP		
B6 Sport	**1.3, 1.4, 1.6, 1.8 16V XR3i, 1.8 D, RS 2000** 07/90 - 12/92 44 -110 kW	**35-003984**	**24-015776** OIO	

FORD				
FORD ESCORT V (GAL)				
B8	**1.3, 1.4, 1.6, 1.8 16V XR3i, 1.8 D, RS 2000** 07/90 - 12/92 44 -110 kW	**35-040286**	**24-017534**	
FORD ESCORT V Estate (GAL, AVL)				
B1	**1.3, 1.4, 1.6, 1.8 16V, 1.8 D, 1.8 TD** 05/91 - 12/92 44 -77 kW	**12-116669**		VA: with ball bearing
B3	**1.3, 1.6** 07/90 - 09/92 44 -77 kW	**36-129898**	**36-133376**	with standard chassis
B3	**1.4** 07/90 - 09/92 52 kW	**36-133390**	**38-129889**	with standard chassis; manual transmission
B3	**1.8 16V** 02/92 - 12/92 77 kW		**38-129889**	with standard chassis
B3	**1.8 D, 1.8 TD** 07/90 - 12/92 44 -55 kW	**36-133369**	**36-133376**	with standard chassis
B4	**1.3** 09/91 - 09/92 44 kW	**22-041135** **11-101338** SP	**19-029313**	
B4	**1.4** 07/90 - 09/92 52 kW	**22-041159** **11-101338** SP	**19-029313**	
B4	**1.4** 07/90 - 10/90 52 kW	**22-041135** **11-101338** SP	**19-029313**	mark: ex. ls
B4	**1.6, 1.8 D** 07/90 - 11/90 44 -77 kW	**22-041135** **11-101338** SP	**19-029313**	
B4	**1.6, 1.8 16V, 1.8 D, 1.8 TD** 11/90 - 12/92 44 -77 kW	**22-041159** **11-101338** SP	**19-029313**	
B6 Sport	**1.3, 1.4, 1.6, 1.8 16V, 1.8 D, 1.8 TD** 10/90 - 12/92 44 -77 kW	**35-003984**	**24-016377**	
FORD ESCORT V Convertible (ALL)				
B1	**1.4, 1.6, 1.8 16V XR3i** 07/90 - 12/92 52 -96 kW	**12-116669**		VA: with ball bearing
B3	**1.4** 07/90 - 12/92 52 kW	**36-201112**	**36-129911**	with standard chassis
B3	**1.6** 07/90 - 12/92 77 kW		**36-159147**	with standard chassis
B3	**1.8 16V XR3i** 02/92 - 12/92 77 -96 kW	**36-201129**	**36-129911**	with standard chassis
B4	**1.4, 1.6** 07/90 - 12/92 52 -77 kW	**22-041159** **11-101338** SP	**19-019994**	
B6 Sport	**1.4, 1.6** 07/90 - 12/92 52 -77 kW	**35-003984**	**24-015776**	
B6 Sport	**1.8 16V XR3i** 02/92 - 12/92 77 -96 kW	**35-003984**	**24-015776**	
B8	**1.8 16V XR3i** 02/92 - 12/92 77 -96 kW	**35-040286**	**24-017534**	

F

FORD

FORD ESCORT VI (GAL)

B1	**1.3, 1.4, 1.6 i 16V, 1.8 16V XR3i, 1.8 D, 1.8 i 16V, 1.8 TD, 1.8 XR3i 16V 4x4, RS 2000, RS 2000 4x4, RS Cosworth 4x4** 09/92 - 01/95 44 -162 kW	**12-116867**		VA: with ball bearing
B3	**1.3** 09/92 - 01/95 44 kW	**36-133383**	**36-129904**	with standard chassis
B3	**1.3, 1.6 i 16V, 1.8 D, 1.8 TD** 09/92 - 01/95 44 -66 kW	**36-133529**	**36-129911**	with standard chassis; Heavy Duty Version .
B3	**1.6 i 16V** 09/92 - 01/95 65 -66 kW	**36-133390**	**36-129904**	with standard chassis
B3	**1.8 i 16V** 09/92 - 01/95 77 kW	**36-133529**	**36-129904**	with standard chassis
B3	**1.8 i 16V** 09/92 - 01/95 77 kW		**36-129904**	with standard chassis; Heavy Duty Version .
B3	**1.8 16V XR3i** 09/92 - 01/95 96 kW	**36-203260**	**36-203277**	with standard chassis
B3	**RS 2000** 09/92 - 01/95 110 kW		**36-203277**	with standard chassis
B3	**1.8 D, 1.8 TD** 09/92 - 01/95 44 -66 kW	**36-133406**	**36-129904**	with standard chassis
B4	**1.3** 09/92 - 01/95 44 kW	**22-041135** **11-101338** SP	**19-019994** OIO	
B4	**1.4, 1.6 i 16V, 1.8 D, 1.8 i 16V** 09/92 - 01/95 44 -77 kW	**22-041159** **11-101338** SP	**19-019994** OIO	
B4	**1.8 16V XR3i, RS 2000** 09/92 - 01/95 96 -110 kW	**22-041159** **11-101338** SP		
B4	**1.8 TD** 02/93 - 01/95 66 kW		**19-019994** OIO	
B6 Sport	**1.3** 07/92 - 01/95 44 kW	**35-003984**	**24-015776** OIO	
B6 Sport	**1.4, 1.6 i 16V, 1.8 16V XR3i, 1.8 D, 1.8 i 16V, 1.8 TD, RS 2000** 09/92 - 01/95 44 -110 kW	**35-003984**	**24-015776** OIO	
B6 Sport	**1.8 XR3i 16V 4x4, RS 2000 4x4, RS Cosworth 4x4** 09/92 - 01/95 77 -162 kW	**22-041296**	**24-020602** OIO	
B8	**1.3** 07/90 - 01/95 44 kW	**35-040286**	**24-017534** OIO	
B8	**1.4, 1.6 i 16V, 1.8 16V XR3i, 1.8 D, 1.8 i 16V, 1.8 TD, RS 2000** 09/92 - 01/95 44 -110 kW	**35-040286**	**24-017534** OIO	
MS	**RS Cosworth 4x4** 09/92 - 01/95 162 kW		**24-024884** OIO	mark: Rallye Gruppe A HA: charakteristic: 350/130; Height Adjustable
MS	**RS Cosworth 4x4** 09/92 - 01/95 162 kW		**24-021890** OIO	firmer setting; mark: Rally Gruppe A HA: charakteristic: 400/150; Height Adjustable

FORD ESCORT VI Saloon (GAL)

B1	**1.3, 1.4, 1.6 i 16V, 1.8 D, 1.8 i 16V, 1.8 TD** 08/93 - 01/95 44 -77 kW	**12-116669**		VA: with ball bearing

FORD

FORD ESCORT VI Saloon (GAL)

B3	**1.3** 08/93 - 01/95 44 kW	**36-133383**	**36-129904**	with standard chassis
B3	**1.3** 08/93 - 01/95 44 kW	**36-133529**	**36-129911**	with standard chassis; Heavy Duty Version .
B3	**1.6 i 16V** 08/93 - 01/95 65 -66 kW	**36-133390**	**36-129904**	with standard chassis
B3	**1.6 i 16V** 08/93 - 01/95 65 -66 kW	**36-133529**	**36-129911**	with standard chassis; Heavy Duty Version .
B3	**1.8 D, 1.8 TD** 08/93 - 01/95 44 -66 kW	**36-133406**	**36-129904**	with standard chassis
B3	**1.8 D, 1.8 TD** 08/93 - 01/95 44 -66 kW	**36-133529**	**36-129911**	with standard chassis; Heavy Duty Version .
B4	**1.3** 08/93 - 01/95 44 kW	**22-041135** **11-101338** SP	**19-019994** OIO	
B4	**1.4, 1.6 i 16V, 1.8 D, 1.8 i 16V** 08/93 - 01/95 44 -77 kW	**22-041159** **11-101338** SP	**19-019994** OIO	
B4	**1.8 TD** 08/93 - 01/95 66 kW		**19-019994** OIO	
B6 Sport	**1.4, 1.6 i 16V, 1.8 i 16V** 08/93 - 01/95 52 -77 kW	**35-003984**	**24-015776** OIO	
B8	**1.3** 07/90 - 01/95 44 kW	**35-040286**	**24-017534** OIO	
B8	**1.4, 1.6 i 16V, 1.8 i 16V** 09/92 - 01/95 52 -77 kW	**35-040286**	**24-017534** OIO	

FORD ESCORT VI Estate (GAL)

B1	**1.3, 1.4, 1.6 i 16V, 1.8 D, 1.8 i 16V, 1.8 TD** 09/92 - 01/95 44 -96 kW	**12-116669**		VA: with ball bearing
B3	**1.3** 09/92 - 01/95 44 kW	**36-133383**	**38-129889**	with standard chassis
B3	**1.6 i 16V** 09/92 - 01/95 65 -66 kW	**36-133390**	**38-129889**	with standard chassis
B3	**1.8 D, 1.8 TD** 09/92 - 01/95 44 -66 kW	**36-133406**	**38-129889**	with standard chassis
B4	**1.3, 1.4, 1.6 i 16V, 1.8 D, 1.8 i 16V, 1.8 TD** 09/92 - 01/95 44 -96 kW	**22-041159** **11-101338** SP	**19-029313** OIO	
B6 Sport	**1.3, 1.4, 1.6 i 16V, 1.8 D, 1.8 i 16V, 1.8 TD** 09/92 - 01/95 44 -96 kW	**35-003984**	**24-016377** OIO	

FORD ESCORT VI Convertible (ALL)

B1	**1.4, 1.4 i, 1.6 16V XR3i, 1.6 i 16V, 1.8 16V XR3i** 12/92 - 01/95 52 -96 kW	**12-116669**		VA: with ball bearing
B3	**1.4, 1.4 i, 1.6 i 16V** 12/92 - 01/95 52 -65 kW	**36-201112**	**36-203277**	with standard chassis

FORD

FORD ESCORT VI Convertible (ALL)

B4	**1.4, 1.4 i, 1.6 i 16V** 12/92 - 01/95 52 -65 kW	**22-041159** **11-101338** SP	**19-019994**	
B6 Sport	**1.4, 1.4 i, 1.6 16V XR3i, 1.6 i 16V, 1.8 16V XR3i** 12/92 - 01/95 52 -96 kW	**35-003984**	**24-015776**	
B8	**1.4, 1.4 i, 1.6 16V XR3i, 1.6 i 16V, 1.8 16V XR3i** 09/92 - 01/95 52 -96 kW	**35-040286**	**24-017534**	

F

FORD ESCORT VII (GAL, AAL, ABL)

B1	**1.3, 1.4, 1.6 16V, 1.6 i 16V, 1.8 16V, 1.8 D, 1.8 TD, 1.8 Turbo D** 01/95 - 10/98 44 -85 kW	**12-116867**		VA: with ball bearing
B3	**1.3, 1.4** 01/95 - 10/98 44 -55 kW	**36-130078**	*36-130061*	with standard chassis
B3	**1.6 16V, 1.6 i 16V, 1.8 16V, 1.8 D, 1.8 Turbo D** 01/95 - 10/98 44 -85 kW	**36-130085**	**36-133413**	with standard chassis
B3	**RS 2000** 02/95 - 02/98 110 kW	**36-201136**		with standard chassis
B3	**1.8 TD** 01/95 - 10/98 66 kW	**36-130092**	**36-133420**	with standard chassis
B4	**1.3, 1.4, 1.6 16V** 01/95 - 08/95 44 -66 kW	**22-045560** **11-101468** SP	**19-029320** **11-105886** SP	VA: Øa: 45,5 mm
B4	**1.3, 1.4, 1.6 16V** 09/95 - 10/98 44 -66 kW	**22-045560** **11-101468** SP	**19-029337** **11-105886** SP	VA: Øa: 45,5 mm
B4	**1.6 i 16V, 1.8 16V, 1.8 D, 1.8 TD, 1.8 Turbo D** 01/95 - 10/98 44 -85 kW	**22-045560** **11-101468** SP	**19-029337** **11-105886** SP	VA: Øa: 45,5 mm
B6 Sport	**1.4, 1.6 16V, 1.6 i 16V, 1.8 16V, 1.8 D, 1.8 TD, 1.8 Turbo D** 01/95 - 10/98 44 -85 kW	*22-043542*	**24-026604**	
B8	**1.4, 1.6 16V, 1.6 i 16V, 1.8 16V, 1.8 D, 1.8 TD, RS 2000** 01/95 - 10/98 44 -110 kW	**22-043825**	**24-026895**	

FORD ESCORT VII Saloon (GAL, AFL)

B1	**1.3, 1.4, 1.6 i 16V, 1.8 16V, 1.8 D, 1.8 TD, 1.8 Turbo D** 01/95 - 02/99 44 -85 kW	**12-116867**		VA: with ball bearing
B3	**1.3, 1.4** 01/95 - 02/99 44 -55 kW	**36-130078**	*36-130061*	with standard chassis
B3	**1.6 i 16V, 1.8 16V, 1.8 D, 1.8 Turbo D** 01/95 - 02/99 44 -85 kW	**36-130085**	**36-133413**	with standard chassis
B3	**1.8 TD** 01/95 - 10/98 66 kW	**36-130092**	**36-133420**	with standard chassis
B4	**1.3, 1.4, 1.6 i 16V, 1.8 16V, 1.8 D, 1.8 TD** 01/95 - 08/95 44 -85 kW	**22-045560** **11-101468** SP	**19-029320** **11-105886** SP	VA: Øa: 45,5 mm
B4	**1.3, 1.4, 1.6 i 16V, 1.8 16V, 1.8 D, 1.8 TD, 1.8 Turbo D** 09/95 - 02/99 44 -85 kW	**22-045560** **11-101468** SP	**19-029337** **11-105886** SP	VA: Øa: 45,5 mm

FORD				
FORD ESCORT VII Saloon (GAL, AFL)				
B6 Sport	**1.4, 1.6 i 16V, 1.8 16V, 1.8 D, 1.8 TD, 1.8 Turbo D** 01/95 - 02/99 44 -85 kW	*22-043542*	**24-026604**	
B8	**1.4, 1.6 i 16V, 1.8 16V, 1.8 D, 1.8 TD** 01/95 - 02/99 44 -85 kW	**22-043825**	**24-026895**	
FORD ESCORT VII Estate (GAL, ANL)				
B3	**1.3, 1.4** 01/95 - 02/99 44 -55 kW	**36-130078**	**38-129889**	with standard chassis
B3	**1.6 16V, 1.6 i 16V, 1.8 16V, 1.8 D, 1.8 Turbo D** 01/95 - 02/99 44 -85 kW	**36-130085**	**38-129889**	with standard chassis
B3	**1.8 TD** 01/95 - 02/99 66 kW	**36-130092**	**38-129889**	with standard chassis
B4	**1.3, 1.4, 1.6 16V** 01/95 - 08/95 44 -66 kW	**22-045560** **11-101468** *SP*	**19-029313**	VA: Øa: 45,5 mm
B4	**1.3, 1.4, 1.6 16V, 1.8 16V, 1.8 D, 1.8 TD, 1.8 Turbo D** 09/95 - 02/99 44 -85 kW	**22-045560** **11-101468** *SP*		VA: Øa: 45,5 mm
B4	**1.6 i 16V, 1.8 16V, 1.8 TD** 01/95 - 08/95 65 -85 kW	**22-045560** **11-101468** *SP*	**19-029313**	VA: Øa: 45,5 mm
B6 Sport	**1.3, 1.4, 1.6 16V, 1.6 i 16V, 1.8 16V, 1.8 D, 1.8 TD, 1.8 Turbo D** 01/95 - 02/99 44 -85 kW	*22-043542*	*24-026611*	
B8	**1.3, 1.4, 1.6 16V, 1.6 i 16V, 1.8 16V, 1.8 TD** 01/95 - 02/99 44 -85 kW	**22-043825**	*24-026901*	
FORD ESCORT VII Convertible (ALL)				
B1	**1.4, 1.6 16V XR3i, 1.8 16V XR3i, 1.8 TD, 1.8 Turbo D** 02/95 - 08/99 51 -96 kW	**12-116867**		VA: with ball bearing
B3	**1.4** 02/95 - 08/98 55 kW	**36-130085**	**36-133420**	with standard chassis
B3	**1.6 16V XR3i, 1.8 16V XR3i** 02/95 - 08/00 65 -96 kW	**36-162963**	**36-159055**	with standard chassis
B3	**1.8 TD, 1.8 Turbo D** 09/95 - 08/99 51 -66 kW	**36-130092**	**36-133420**	with standard chassis
B4	**1.4, 1.6 16V XR3i, 1.8 16V XR3i, 1.8 TD, 1.8 Turbo D** 02/95 - 08/99 51 -96 kW	**22-045560** **11-101468** *SP*	**19-029337** **11-105886** *SP*	VA: Øa: 45,5 mm
B6 Sport	**1.4, 1.6 16V XR3i, 1.8 16V XR3i, 1.8 TD, 1.8 Turbo D** 02/95 - 08/99 51 -96 kW	*22-043542*	**24-026604**	
B8	**1.4, 1.6 16V XR3i, 1.8 16V XR3i, 1.8 TD, 1.8 Turbo D** 02/95 - 08/99 51 -96 kW	**22-043825**	**24-026895**	
FORD ESCORT CLASSIC (AAL, ABL)				
B3	**1.6 16V** 10/98 - 07/00 66 kW	**36-130085**	**36-133413**	with standard chassis; mark: Classic

F

FORD				
FORD ESCORT CLASSIC (AAL, ABL)				
B3	**1.8 TD** 10/98 - 07/00 66 kW	**36-130092**	**36-133420**	with standard chassis; mark: Classic
FORD ESCORT CLASSIC Turnier (ANL)				
B3	**1.6 16V** 02/99 - 07/00 66 kW	**36-201136**		with standard chassis
FORD ESCORT '91 Express (AVL)				
B3	**1.4** 07/90 - 12/94 52 kW	**36-159178**		with standard chassis; To Payload 700 kg
B3	**1.8 D** 07/90 - 12/94 44 kW	**36-201112**		with standard chassis; To Payload 700 kg
B4	**1.4** 07/90 - 12/94 52 kW	**22-041135** **11-101338** SP	**19-132327** OIO	max. load: 500 kg
B4	**1.4, 1.8 D** 07/90 - 12/94 44 -52 kW	**22-041159** **11-101338** SP	**19-132327** OIO	max. load: 700 kg
FORD ESCORT '95 Box (AVL)				
B3	**1.4, 1.8 D, 1.8 Turbo D** 01/95 - 44 -54 kW	**36-201136**		with standard chassis; To Payload 700 kg
B4	**1.4** 01/95 - 54 kW	**22-041135** **11-101338** SP	**19-132327** OIO	max. load: 500 kg
B4	**1.4, 1.8 D** 01/95 - 44 -54 kW	**22-041159** **11-101338** SP	**19-132327** OIO	max. load: 700 kg
FORD FIESTA I (GFBT)				
B3	**0.9, 1.1, 1.3** 05/76 - 08/83 29 -49 kW	**36-159260**	**36-164042**	with standard chassis
B4	**0.9, 1.1, 1.3** 05/76 - 08/83 29 -49 kW	*22-040770* **11-101338** SP		
FORD FIESTA II (FBD)				
B3	**1.0, 1.1, 1.3, 1.4** 09/83 - 11/89 33 -55 kW	**36-164097**	**36-164066**	with standard chassis
B3	**1.0, 1.1, 1.3, 1.4, 1.6 D** 09/83 - 11/89 33 -55 kW		**36-164042**	with standard chassis; Heavy Duty Version .
B3	**1.6 XR2** 03/84 - 02/89 70 -71 kW	**36-164073**	**36-164059**	with standard chassis
B3	**1.6 D** 04/84 - 02/89 40 kW	**36-164080**	**36-164066**	with standard chassis
B4	**1.0, 1.1, 1.3, 1.4** 09/83 - 11/89 33 -55 kW	*22-040886* **11-101338** SP		
B4	**1.6 XR2** 03/84 - 02/89 70 -71 kW	*22-040954*		
B6 Sport	**1.0, 1.1, 1.3, 1.4, 1.6 D, 1.6 XR2** 09/83 - 11/89 33 -71 kW	*35-041283*		

FORD

FORD FIESTA III (GFJ)

B3	**1.0, 1.1, 1.3, 1.3 CAT, 1.4, 1.4 CAT, 1.6, 1.6 i 16V, 1.8 16V** 01/89 - 01/97 33 -77 kW	**36-154289**	**36-154340**	with standard chassis
B3	**1.0, 1.1, 1.3, 1.3 CAT, 1.4, 1.4 CAT, 1.6, 1.8 D, 1.8 TD** 01/89 - 01/97 33 -66 kW		**36-164004**	with standard chassis; Heavy Duty Version .
B3	**1.6 XR2i, 1.8 XR2i 16V** 03/89 - 12/95 76 -96 kW	**36-159178**	**36-164011**	with standard chassis
B3	**1.6 Turbo** 03/90 - 10/92 96 kW	**36-159178**	**36-164011**	with standard chassis
B3	**1.8 D, 1.8 TD** 03/89 - 12/95 44 -57 kW	**36-154333**		with standard chassis
B4	**1.0, 1.3, 1.3 CAT, 1.8 D** 03/89 - 12/93 33 -44 kW	**22-041012** **11-101468** SP	**19-019840**	VA: Øa: 44 mm
B4	**1.0, 1.1, 1.3 CAT, 1.4, 1.4 CAT** 01/94 - 01/97 33 -54 kW	**22-045522** **11-101468** SP	**19-019840**	mark: S, SX VA: Øa: 45,5 mm; for vehicles with stabilizer
B4	**1.1, 1.4, 1.4 CAT** 03/89 - 12/93 37 -54 kW	**22-041012** **11-101468** SP	**19-019840**	mark: ex. S VA: Øa: 44 mm; For vehicles without stabilizer
B4	**1.1, 1.4, 1.4 CAT, 1.6** 01/89 - 12/93 37 -66 kW	**22-041241** **11-101468** SP	**19-019840**	mark: S VA: Øa: 44 mm; for vehicles with stabilizer
B4	**1.1, 1.3 CAT, 1.4, 1.4 CAT** 01/94 - 01/97 37 -54 kW	**22-139993** **11-101468** SP	**19-019840**	mark: C,CL,Ghia,Youth,Van VA: Øa: 45,5 mm; For vehicles without stabilizer
B4	**1.4, 1.4 CAT** 03/89 - 12/93 52 -54 kW	**22-045560** **11-101468** SP	**19-029320** **11-105886** SP	mark: iS VA: Øa: 45,5 mm
B4	**1.6** 01/94 - 01/94 65 kW	**22-045522** **11-101468** SP	**19-019840**	mark: Ghia VA: Øa: 45,5 mm
B4	**1.6, 1.6 i 16V, 1.8 16V, 1.8 D, 1.8 TD, 1.8 XR2i 16V** 01/94 - 12/95 44 -96 kW	**11-101468** SP	*19-029290*	
B4	**1.6 XR2i** 03/89 - 05/90 76 -81 kW	**22-041241** **11-101468** SP	**19-019840**	VA: Øa: 44 mm
B4	**1.6 XR2i, 1.8 16V, 1.8 TD, 1.8 XR2i 16V** 06/90 - 12/93 57 -96 kW	**22-041241** **11-101468** SP	*19-029290*	VA: Øa: 44 mm
B6 Sport	**1.1, 1.3 CAT, 1.4, 1.4 CAT, 1.6 i 16V, 1.8 16V, 1.8 D, 1.8 TD, 1.8 XR2i 16V** 01/94 - 01/97 37 -96 kW			
B8	**1.1, 1.3, 1.3 CAT, 1.4, 1.4 CAT, 1.6, 1.6 Turbo, 1.8 16V, 1.8 D, 1.8 TD, 1.8 XR2i 16V** 01/89 - 12/93 37 -96 kW	*35-003779*		VA: Øa: 44 mm
B8	**1.1, 1.3 CAT, 1.4, 1.4 CAT, 1.6 i 16V, 1.8 16V, 1.8 D, 1.8 TD, 1.8 XR2i 16V** 01/94 - 01/97 37 -96 kW	*35-042013*		VA: Øa: 45,5 mm

FORD FIESTA IV (JA_, JB_)

B1	**1.0 i, 1.1, 1.25 i 16V, 1.3 i, 1.4 i 16V, 1.6 16V Sport, 1.8 D, 1.8 DI** 08/95 - 01/02 37 -76 kW	**12-117161**	**12-117154**	VA: with ball bearing
B3	**1.0 i, 1.1, 1.25 i 16V, 1.3 i** 08/95 - 01/02 37 -55 kW	**36-130030**	**36-133437**	with standard chassis

FORD				
FORD FIESTA IV (JA_, JB_)				
B3	**1.4 i 16V** 04/96 - 01/02 66 kW	**36-154432**	**36-133437**	with standard chassis
B3	**1.8 D** 08/95 - 04/00 44 kW	**36-130030**	**36-159062**	with standard chassis
B3	**1.8 DI** 04/00 - 01/02 55 kW	**36-215348**	**36-159062**	with standard chassis
B4	**1.0 i, 1.25 i 16V, 1.3 i, 1.4 i 16V** 04/96 - 08/98 37 -66 kW	**22-045546** **11-101338** SP	**19-029306** HA **11-105886** SP	
B4	**1.0 i, 1.25 i 16V, 1.3 i, 1.4 i 16V** 09/98 - 01/02 37 -66 kW	**22-045546** **11-101338** SP	**19-104089** **11-105886** SP	
B4	**1.6 16V Sport** 02/00 - 11/01 76 kW	**22-045546**	**19-104089**	
B4	**1.8 D** 08/95 - 08/98 44 kW	**22-045553** **11-101338** SP	**19-029306** HA **11-105886** SP	
B4	**1.8 D** 09/98 - 04/00 44 kW	**22-045553** **11-101338** SP	**19-104089** **11-105886** SP	
B4	**1.8 DI** 04/00 - 01/02 55 kW	**22-045553** **11-101338** SP	**19-104089**	
B6 Sport	**1.0 i, 1.25 i 16V, 1.3 i, 1.4 i 16V, 1.8 D** 08/95 - 10/98 37 -66 kW	**22-043313**	**24-026413** HA	
B6 Sport	**1.0 i, 1.25 i 16V, 1.3 i, 1.4 i 16V, 1.6 16V Sport, 1.8 D, 1.8 DI** 11/98 - 01/02 37 -76 kW	**22-043313**	**24-060950**	
FORD FIESTA V (JH_, JD_)				
B1	**1.25 16V, 1.3, 1.4 16V, 1.4 TDCi, 1.6 16V, 1.6 TDCi, ST150** 11/01 - 44 -110 kW	**12-224340**	**12-224388**	VA: with ball bearing
B3	**1.25 16V, 1.3, 1.4 16V, 1.6 16V** 11/01 - 44 -74 kW	**37-148041**	**36-148066**	with standard chassis
B3	**1.25 16V, 1.3, 1.4 16V, 1.6 16V** 11/01 - 44 -74 kW	**37-148058**		with standard chassis; Heavy Duty Version .
B3	**1.4 TDCi, 1.6 TDCi** 11/01 - 50 -66 kW	**37-148058**	**36-148066**	with standard chassis
B4	**1.0, 1.25 16V, 1.3, 1.4 16V, 1.4 TDCi, 1.6 16V, 1.6 TDCi** 11/01 - 44 -74 kW	**22-111760** **22-111777**	**19-111780**	
B6 Sport	**1.0, 1.25 16V, 1.3, 1.4 16V, 1.4 TDCi, 1.6 16V, 1.6 TDCi, ST150** 11/01 - 44 -110 kW	**35-103547** **35-103554**	**24-103565**	with sports suspension; with standard chassis
B8	**1.0, 1.25 16V, 1.3, 1.4 16V, 1.4 TDCi, 1.6 16V, 1.6 TDCi, ST150** 11/01 - 44 -110 kW	**35-103578** **35-103585**	**24-103596**	with standard chassis; with sports suspension
B12 PK	**1.25 16V, 1.3, 1.4 16V** 11/01 - 44 -59 kW	**46-190116**		Conditions see certificates VA: lowering (expertise): 35 mm; axle load to: 820 kg HA: lowering (expertise): 30 mm; axle load to: 800 kg
B12 PK	**1.4 TDCi, 1.6 16V, 1.6 TDCi, ST150** 11/01 - 50 -110 kW	**46-190123**		Conditions see certificates VA: lowering (expertise): 35 mm; axle load to: 860 kg HA: lowering (expertise): 30 mm; axle load to: 800 kg

FORD				
FORD FIESTA VI				
B1	**1.25, 1.4, 1.4 LPG, 1.4 TDCi, 1.6, 1.6 Flex, 1.6 TDCi, 1.6 Ti** 10/08 - 44 -99 kW	**12-225354**	**12-225347**	VA: Material: Rubber/Metal; without ball bearing; manual transmission HA: Material: Rubber/Metal; without ball bearing
B3	**1.25, 1.4, 1.4 LPG, 1.6, 1.6 Flex, 1.6 Ti** 10/08 - 44 -99 kW	**36-214501**	**36-214549**	with standard chassis
B3	**1.25, 1.4, 1.4 LPG, 1.6, 1.6 Flex, 1.6 Ti** 10/08 - 44 -99 kW	**36-214518**		with standard chassis; Heavy Duty Version .
B3	**1.4 TDCi, 1.6 TDCi** 10/08 - 50 -70 kW	**36-214518**	**36-214549**	with standard chassis
B4	**1.0 Flex, 1.25, 1.4, 1.4 LPG, 1.4 TDCi, 1.6, 1.6 Flex, 1.6 TDCi, 1.6 Ti** 02/10 - 44 -99 kW	i.V. i.V.	**24-188654** OIO	
B14	**1.0 Flex, 1.25, 1.4, 1.4 LPG, 1.4 TDCi, 1.6, 1.6 Flex, 1.6 TDCi, 1.6 Ti** 02/10 - 44 -99 kW	**47-167490**		Conditions see certificates VA: lowering (expertise): 25-40 mm; axle load to: 850 kg HA: lowering (expertise): 20-40 mm; axle load to: 765 kg
FORD FIESTA Box (WFVT)				
B6 Sport	**1.0, 1.1** 10/77 - 11/86 29 -39 kW	*35-041283*		
FORD FIESTA Box (FVD)				
B3	**1.0** 08/83 - 11/89 33 kW		**36-164042**	with standard chassis
B4	**1.0, 1.4, 1.6 D** 08/83 - 11/89 33 -52 kW	**22-041012** **11-101468** SP	**19-019840** OIO	VA: Øa: 44 mm
B4	**1.3, 1.8 D, 1.8 TD** 03/89 - 12/93 40 -55 kW	**22-041012** **11-101468** SP	**19-019840** OIO	VA: Øa: 44 mm
B4	**1.3, 1.8 D, 1.8 TD** 01/94 - 12/95 40 -55 kW	**22-045522** **11-101468** SP	**19-019840** OIO	VA: Øa: 45,5 mm
FORD FIESTA Box (F3L, F5L)				
B3	**1.3** 09/91 - 02/96 44 kW	**36-154289**		with standard chassis
B3	**1.8 D, 1.8 TD** 09/91 - 02/96 44 -55 kW	**36-201129**		with standard chassis
B4	**1.3, 1.8 D** 09/91 - 12/93 44 kW	**22-041241** **11-101468** SP	**19-029283** OIO	VA: Øa: 44 mm
B4	**1.3, 1.8 D, 1.8 TD** 01/94 - 02/96 44 -55 kW	**22-045522** **11-101468** SP	**19-029283** OIO	VA: Øa: 45,5 mm
FORD FIESTA Box (J5_, J3_)				
B1	**1.3, 1.4 i, 1.8 D, 1.8 DI** 02/96 - 44 -66 kW	**12-117161**		VA: with ball bearing
B3	**1.3, 1.4 i** 02/96 - 44 -66 kW	**36-154432**		with standard chassis
B3	**1.8 D, 1.8 DI** 02/96 - 44 -55 kW	**36-215348**		with standard chassis
B4	**1.3, 1.4 i** 02/96 - 44 -66 kW	**22-045546**	**19-029283** OIO	

F

FORD				
FORD FIESTA Box (J5_, J3_)				
B4	**1.8 D, 1.8 DI** 02/96 - 44 -55 kW	**22-045553** **11-101338** SP	**19-029283**	
FORD FIESTA Box (JV_)				
B1	**D 1.8, TD 1.8** 05/98 - 44 -55 kW	**12-117161**	**12-117154**	VA: with ball bearing
B3	**D 1.8** 05/98 - 44 kW	**36-154432**	**36-133437**	with standard chassis
B3	**TD 1.8** 03/00 - 55 kW		**36-133437**	with standard chassis
B4	**D 1.8** 05/98 - 08/98 44 kW	**22-045553** **11-101338** SP	**19-029306** **11-105886** SP	
B4	**D 1.8** 09/98 - 44 kW	**22-045553** **11-101338** SP	**19-104089** **11-105886** SP	
B4	**TD 1.8** 03/00 - 55 kW	**22-045546** **11-101338** SP	**19-104089** **11-105886** SP	
FORD FIESTA Van				
B3	**1.3** 10/03 - 12/03 51 kW	**37-148041**		with standard chassis
B3	**1.3, 1.4 TDCi** 10/03 - 50 -51 kW		**36-148066**	with standard chassis
B3	**1.4 TDCi** 10/03 - 12/03 50 kW	**37-148058**	**36-148066**	with standard chassis
FORD FIESTA Van				
B3	**1.25, 1.4 TDCi** 01/09 - 50 -60 kW		**36-148066**	with standard chassis
FORD FOCUS (DAW, DBW)				
B1	**1.4 16V, 1.6 16V, 1.6 16V Flexifuel, 1.8 16V, 1.8 DI / TDDi, 1.8 TDCi, 1.8 Turbo DI / TDDi, 2.0 16V** 10/98 - 11/04 55 -96 kW	**12-117888**		not for: RS; manual transmission VA: with ball bearing
B3	**1.4 16V, 1.6 16V, 1.8 16V, 2.0 16V** 10/98 - 11/04 55 -96 kW	**36-154296**	**36-154302**	with standard chassis
B3	**1.4 16V, 1.6 16V** 10/98 - 11/04 55 -74 kW	**36-154326**		with standard chassis; Heavy Duty Version .
B3	**1.8 DI / TDDi, 1.8 Turbo DI / TDDi** 10/98 - 11/04 55 -66 kW	**36-154326**	**36-154302**	with standard chassis
B3	**1.8 TDCi** 03/01 - 11/04 74 -85 kW	**36-154326**	**36-163991**	with standard chassis
B3	**1.8 TDCi** 03/01 - 11/04 74 -85 kW		**36-154302**	with standard chassis; Heavy Duty Version .
B4	**1.4 16V, 1.6 16V, 1.6 16V Flexifuel, 1.8 16V, 1.8 DI / TDDi, 1.8 TDCi, 1.8 Turbo DI / TDDi, 2.0 16V** 10/98 - 11/04 55 -96 kW	**22-051226** **22-051219**	**19-065878**	

FORD

FORD FOCUS (DAW, DBW)

B6 Sport	**1.4 16V, 1.6 16V, 1.6 16V Flexifuel, 1.8 16V, 1.8 DI / TDDi, 1.8 TDCi, 1.8 Turbo DI / TDDi, 2.0 16V, ST170** 10/98 - 11/04 55 -127 kW	**35-051398** **35-051404**	**24-066655**	
B8	**1.4 16V, 1.6 16V, 1.8 16V, 1.8 DI / TDDi, 1.8 TDCi, 1.8 Turbo DI / TDDi, 2.0 16V, ST170** 10/98 - 11/04 55 -127 kW	**35-051411** **35-051428**	**24-066662**	
B12 PK	**1.4 16V, 1.6 16V** 10/98 - 11/04 55 -74 kW	**46-181336**		Conditions see certificates VA: lowering (expertise): 30 mm; axle load to: 855 kg HA: without ride height adjustment; lowering (expertise): 30 mm; axle load to: 905 kg
B12 PK	**1.8 16V, 2.0 16V** 10/98 - 11/04 85 -96 kW	**46-181343**		Conditions see certificates VA: lowering (expertise): 30 mm; axle load to: 915 kg HA: without ride height adjustment; lowering (expertise): 30 mm; axle load to: 905 kg
B12 PK	**ST170** 03/02 - 11/04 127 kW	**46-181343**		Conditions see certificates VA: lowering (expertise): 20-25 mm; axle load to: 915 kg HA: without ride height adjustment; lowering (expertise): 30 mm; axle load to: 905 kg
B12 PK	**1.8 DI / TDDi, 1.8 TDCi, 1.8 Turbo DI / TDDi** 10/98 - 11/04 55 -85 kW	**46-181374**		Conditions see certificates VA: lowering (expertise): 30 mm; axle load to: 965 kg HA: without ride height adjustment; lowering (expertise): 30 mm; axle load to: 905 kg
B16 PSS9	**1.4 16V, 1.6 16V, 1.8 16V, 1.8 DI / TDDi, 1.8 TDCi, 1.8 Turbo DI / TDDi, 2.0 16V, ST170** 10/98 - 11/04 55 -127 kW	**48-080460**		Spacers required for several wheel/tyre combinations; Conditions see certificates VA: lowering (expertise): 30-50 mm; axle load to: 965 kg HA: lowering (expertise): 30-50 mm; axle load to: 880 kg

FORD FOCUS Saloon (DFW)

B1	**1.4 16V, 1.6 16V, 1.8 16V, 1.8 TDCi, 1.8 TDdi, 1.8 Turbo DI / TDDi, 2.0 16V** 02/99 - 03/05 55 -96 kW	**12-117888**		not for: RS; manual transmission VA: with ball bearing
B3	**1.4 16V, 1.6 16V, 1.8 16V, 2.0 16V** 02/99 - 11/04 55 -96 kW	**36-154296**	**36-154302**	with standard chassis
B3	**1.4 16V, 1.6 16V** 02/99 - 11/04 55 -74 kW	**36-154326**		with standard chassis; Heavy Duty Version .
B3	**1.8 TDdi, 1.8 Turbo DI / TDDi** 02/99 - 03/05 55 -66 kW	**36-154326**	**36-154302**	with standard chassis
B3	**1.8 TDCi** 03/01 - 11/04 74 -85 kW	**36-154326**	**36-163991**	with standard chassis
B3	**1.8 TDCi** 03/01 - 11/04 74 -85 kW		**36-154302**	with standard chassis; Heavy Duty Version .
B4	**1.4 16V, 1.6 16V, 1.8 16V, 1.8 TDCi, 1.8 TDdi, 1.8 Turbo DI / TDDi, 2.0 16V** 02/99 - 03/05 55 -96 kW	**22-051226** **22-051219**	**19-065878**	
B6 Sport	**1.4 16V, 1.6 16V, 1.8 16V, 1.8 TDCi, 1.8 TDdi, 1.8 Turbo DI / TDDi, 2.0 16V** 02/99 - 03/05 55 -96 kW	**35-051398** **35-051404**	**24-066655**	
B8	**1.4 16V, 1.6 16V, 1.8 16V, 1.8 TDCi, 1.8 TDdi, 1.8 Turbo DI / TDDi, 2.0 16V** 02/99 - 03/05 55 -96 kW	**35-051411** **35-051428**	**24-066662**	
B12 PK	**1.4 16V, 1.6 16V** 02/99 - 11/04 55 -74 kW	**46-181336**		Conditions see certificates VA: lowering (expertise): 30 mm; axle load to: 855 kg HA: without ride height adjustment; lowering (expertise): 30 mm; axle load to: 905 kg
B12 PK	**1.8 16V, 2.0 16V** 02/99 - 11/04 85 -96 kW	**46-181343**		Conditions see certificates VA: lowering (expertise): 30 mm; axle load to: 915 kg HA: without ride height adjustment; lowering (expertise): 30 mm; axle load to: 905 kg

FORD

FORD FOCUS Saloon (DFW)

B12 PK	**1.8 TDCi, 1.8 Turbo DI / TDDi** 02/99 - 11/04 66 -85 kW	**46-181374**		Conditions see certificates VA: lowering (expertise): 30 mm; axle load to: 965 kg HA: without ride height adjustment; lowering (expertise): 30 mm; axle load to: 905 kg
B16 PSS9	**1.4 16V, 1.6 16V, 1.8 16V, 1.8 TDCi, 1.8 TDdi, 1.8 Turbo DI / TDDi, 2.0 16V** 02/99 - 03/05 55 -96 kW	**48-080460**		Spacers required for several wheel/tyre combinations; Conditions see certificates VA: lowering (expertise): 30-50 mm; axle load to: 965 kg HA: lowering (expertise): 30-50 mm; axle load to: 880 kg

FORD FOCUS Estate (DNW)

B1	**1.4 16V, 1.6 16V, 1.6 16V Flexifuel, 1.8 16V, 1.8 DI / TDDi, 1.8 TDCi, 1.8 Turbo DI / TDDi, 2.0 16V** 02/99 - 11/04 55 -96 kW	**12-117888**		VA: with ball bearing
B3	**1.4 16V, 1.6 16V, 1.6 16V Flexifuel, 1.8 16V** 02/99 - 11/04 55 -85 kW	**36-154357**	**36-154456**	with standard chassis
B3	**1.4 16V, 1.6 16V, 1.6 16V Flexifuel, 1.8 16V** 02/99 - 11/04 55 -85 kW	**36-154326**		with standard chassis; Heavy Duty Version .
B3	**1.8 DI / TDDi, 1.8 Turbo DI / TDDi** 02/99 - 11/04 55 -66 kW	**36-154326**	**36-154456**	with standard chassis
B3	**1.8 TDCi, 2.0 16V** 02/99 - 11/04 74 -96 kW	**36-154326**	**36-154456**	with standard chassis
B4	**1.4 16V, 1.6 16V, 1.6 16V Flexifuel, 1.8 16V, 1.8 DI / TDDi, 1.8 TDCi, 1.8 Turbo DI / TDDi, 2.0 16V** 02/99 - 11/04 55 -96 kW	**22-051226** **22-051219**	**19-065885** OIO	
B6 Sport	**1.4 16V, 1.6 16V, 1.6 16V Flexifuel, 1.8 16V, 1.8 DI / TDDi, 1.8 TDCi, 1.8 Turbo DI / TDDi, 2.0 16V, ST170** 02/99 - 11/04 55 -127 kW	**35-051398** **35-051404**	**24-066679** OIO	
B8	**1.4 16V, 1.6 16V, 1.6 16V Flexifuel, 1.8 16V, 1.8 DI / TDDi, 1.8 TDCi, 1.8 Turbo DI / TDDi, 2.0 16V, ST170** 02/99 - 11/04 55 -127 kW	**35-051411** **35-051428**	**24-066679** OIO	
B12 PK	**1.4 16V, 1.6 16V, 1.6 16V Flexifuel** 02/99 - 11/04 55 -75 kW	**46-181350**		Conditions see certificates VA: lowering (expertise): 30 mm; axle load to: 855 kg HA: without ride height adjustment; lowering (expertise): 30 mm; axle load to: 1010 kg
B12 PK	**1.8 16V, 2.0 16V, ST170** 02/99 - 11/04 85 -127 kW	**46-181367**		Conditions see certificates VA: lowering (expertise): 30 mm; axle load to: 915 kg HA: without ride height adjustment; lowering (expertise): 30 mm; axle load to: 1010 kg
B12 PK	**1.8 DI / TDDi, 1.8 TDCi, 1.8 Turbo DI / TDDi** 02/99 - 11/04 55 -85 kW	**46-181381**		Conditions see certificates VA: lowering (expertise): 30 mm; axle load to: 965 kg HA: without ride height adjustment; lowering (expertise): 30 mm; axle load to: 1010 kg
B16 PSS9	**1.4 16V, 1.6 16V, 1.6 16V Flexifuel, 1.8 16V, 1.8 DI / TDDi, 1.8 TDCi, 1.8 Turbo DI / TDDi, 2.0 16V, ST170** 02/99 - 11/04 55 -127 kW	**48-080453**		Conditions see certificates VA: lowering (expertise): 30-50 mm; axle load to: 965 kg HA: lowering (expertise): 25-45 mm; axle load to: 960 kg

FORD FOCUS C-MAX

B1	**1.6, 1.6 TDCi, 1.6 Ti, 1.8, 1.8 Flexifuel, 1.8 TDCi, 2.0, 2.0 TDCi** 10/03 - 03/07 66 -107 kW		**12-224173**	
B3	**1.6, 1.6 Ti** 10/03 - 03/07 74 -85 kW	**37-162924**	**36-162871**	with standard chassis

FORD				
FORD FOCUS C-MAX				
B3	**1.6, 1.6 Ti** 10/03 - 03/07 74 -85 kW	**37-162917**		with standard chassis; Heavy Duty Version .
B3	**1.6 TDCi, 1.8, 1.8 Flexifuel, 2.0** 03/04 - 03/07 66 -107 kW	**37-162917**	**36-162871**	with standard chassis
B3	**1.6 TDCi, 1.8, 1.8 Flexifuel, 2.0** 03/04 - 03/07 66 -107 kW	**37-159108**		with standard chassis; Heavy Duty Version .
B3	**1.8 TDCi, 2.0 TDCi** 10/03 - 03/07 85 -100 kW	**37-159108**	**36-162871**	with standard chassis
B4	**1.6, 1.6 TDCi, 1.6 Ti, 1.8, 1.8 Flexifuel, 1.8 TDCi, 2.0, 2.0 TDCi** 10/03 - 03/07 66 -107 kW	**22-112811** **22-112880**	**19-119519**	
B6 Sport	**1.6, 1.6 TDCi, 1.6 Ti, 1.8, 1.8 Flexifuel, 1.8 TDCi, 2.0, 2.0 TDCi** 10/03 - 03/07 66 -107 kW	**35-110736** **35-110743**	**24-110754**	
B8	**1.6, 1.6 TDCi, 1.6 Ti, 1.8, 1.8 Flexifuel, 1.8 TDCi, 2.0, 2.0 TDCi** 10/03 - 03/07 66 -107 kW	**35-110767** **35-110774**	**24-110754**	
FORD C-MAX				
B1	**1.6, 1.6 TDCi, 1.8, 1.8 Flexifuel, 1.8 TDCi, 2.0, 2.0 LPG, 2.0 TDCi** 02/07 - 66 -107 kW		**12-224173**	
B3	**1.6 TDCi, 1.8, 1.8 Flexifuel, 1.8 TDCi, 2.0** 02/07 - 66 -107 kW	**37-162917**		with standard chassis
B3	**2.0 TDCi** 02/07 - 81 -100 kW	**37-159108**		with standard chassis
B4	**1.6, 1.6 TDCi, 1.8, 1.8 Flexifuel, 1.8 TDCi, 2.0, 2.0 LPG, 2.0 TDCi** 02/07 - 66 -107 kW	**22-112811** **22-112880**	**19-119519**	
FORD FOCUS II (DA_)				
B1	**1.4, 1.6, 1.6 LPG, 1.6 TDCi, 1.6 Ti, 1.8, 1.8 Flexifuel, 1.8 Ghia Flexifuel, 1.8 TDCi, 2.0, 2.0 LPG, 2.0 TDCi** 11/04 - 59 -107 kW	**12-224166**	**12-224173**	VA: with ball bearing
B3	**1.4, 1.6, 1.6 LPG, 1.6 Ti** 11/04 - 59 -85 kW	**37-000806**	**36-172153**	with standard chassis
B3	**1.4, 1.6, 1.6 LPG, 1.6 Ti** 11/04 - 59 -85 kW	**37-000806**	**36-172160**	with standard chassis; Heavy Duty Version .
B3	**1.6 TDCi, 1.8, 1.8 Flexifuel, 1.8 Ghia Flexifuel, 1.8 TDCi, 2.0, 2.0 LPG, 2.0 TDCi** 11/04 - 66 -107 kW	*37-172183*	**36-172153**	with standard chassis
B3	**1.6 TDCi, 1.8, 1.8 Flexifuel, 1.8 Ghia Flexifuel, 1.8 TDCi, 2.0, 2.0 LPG, 2.0 TDCi** 11/04 - 66 -107 kW	*37-172183*	**36-172160**	with standard chassis; Heavy Duty Version .
B4	**1.4, 1.6, 1.6 LPG, 1.6 TDCi, 1.6 Ti, 1.8, 1.8 Flexifuel, 1.8 Ghia Flexifuel, 1.8 TDCi, 2.0, 2.0 LPG, 2.0 TDCi, 2.5 ST** 11/04 - 59 -166 kW	**22-112811** **22-112880**	**19-119526**	

FORD

FORD FOCUS II (DA_)

B6 Sport	**1.4, 1.6, 1.6 LPG, 1.6 TDCi, 1.6 Ti, 1.8, 1.8 Flexifuel, 1.8 Ghia Flexifuel, 1.8 TDCi, 2.0, 2.0 LPG, 2.0 TDCi, 2.5 ST** 11/04 - 59 -166 kW	**35-110736** ↰ **35-110743** ↱		
B8	**1.4, 1.6, 1.6 LPG, 1.6 TDCi, 1.6 Ti, 1.8, 1.8 Flexifuel, 1.8 Ghia Flexifuel, 1.8 TDCi, 2.0, 2.0 LPG, 2.0 TDCi, 2.5 ST** 11/04 - 59 -166 kW	**35-110767** ↰ **35-110774** ↱		
B12 PK	**1.4, 1.6, 1.6 Ti, 1.8** 11/04 - 59 -92 kW	**46-181282**		Conditions see certificates VA: lowering (expertise): 30 mm; axle load to: 1005 kg HA: without ride height adjustment; lowering (expertise): 30 mm; axle load to: 1015 kg
B12 PK	**2.5 ST** 10/05 - 166 kW	**46-181329**		Conditions see certificates VA: lowering (expertise): 20 mm; axle load to: 1050 kg HA: without ride height adjustment; lowering (expertise): 25 mm; axle load to: 915 kg
B12 PK	**1.6 TDCi, 1.8 TDCi, 2.0, 2.0 TDCi** 11/04 - 66 -107 kW	**46-181299**		Conditions see certificates VA: lowering (expertise): 30 mm; axle load to: 1070 kg HA: without ride height adjustment; lowering (expertise): 30 mm; axle load to: 1015 kg
B14	**1.4, 1.6, 1.6 LPG, 1.6 TDCi, 1.6 Ti, 1.8, 1.8 Flexifuel, 1.8 Ghia Flexifuel, 1.8 TDCi, 2.0, 2.0 LPG, 2.0 TDCi, 2.5 ST** 11/04 - 59 -166 kW	**47-121225**		Conditions see certificates VA: lowering (expertise): 30-50 mm; axle load to: 1070 kg HA: lowering (expertise): 30-50 mm; axle load to: 1090 kg
B16 PSS9	**1.4, 1.6, 1.6 LPG, 1.6 TDCi, 1.6 Ti, 1.8, 1.8 Flexifuel, 1.8 Ghia Flexifuel, 1.8 TDCi, 2.0, 2.0 LPG, 2.0 TDCi, 2.5 ST** 11/04 - 59 -166 kW	**48-121262**		Conditions see certificates VA: lowering (expertise): 30-50 mm; axle load to: 1070 kg HA: lowering (expertise): 30-50 mm; axle load to: 1090 kg

FORD FOCUS II Saloon (DA_)

B1	**1.4, 1.6, 1.6 TDCi, 1.6 Ti, 1.8, 1.8 Flexifuel, 1.8 Ghia Flexifuel, 1.8 TDCi, 2.0, 2.0 TDCi, 400h** 04/05 - 59 -107 kW	**12-224166**	**12-224173**	VA: with ball bearing
B3	**1.4, 1.6, 1.6 Ti** 04/05 - 59 -85 kW	**37-000806**	**36-172160**	with standard chassis
B3	**1.6 TDCi, 1.8, 1.8 Flexifuel, 1.8 Ghia Flexifuel, 1.8 TDCi, 2.0, 2.0 TDCi, 400h** 04/05 - 66 -107 kW	*37-172183*	**36-172160**	with standard chassis
B4	**1.4, 1.6, 1.6 TDCi, 1.6 Ti, 1.8, 1.8 Flexifuel, 1.8 Ghia Flexifuel, 1.8 TDCi, 2.0, 2.0 TDCi, 400h** 04/05 - 59 -107 kW	**22-112811** ↰ **22-112880** ↱	**19-119526**	
B6 Sport	**1.4, 1.6, 1.6 TDCi, 1.6 Ti, 1.8, 1.8 Flexifuel, 1.8 Ghia Flexifuel, 1.8 TDCi, 2.0, 2.0 TDCi, 400h** 04/05 - 59 -107 kW	**35-110736** ↰ **35-110743** ↱		
B8	**1.4, 1.6, 1.6 TDCi, 1.6 Ti, 1.8, 1.8 Flexifuel, 1.8 Ghia Flexifuel, 1.8 TDCi, 2.0, 2.0 TDCi, 400h** 04/05 - 59 -107 kW	**35-110767** ↰ **35-110774** ↱		
B12 PK	**1.4, 1.6, 1.6 Ti, 1.8** 04/05 - 59 -92 kW	**46-181282**		Conditions see certificates VA: lowering (expertise): 30 mm; axle load to: 1005 kg HA: without ride height adjustment; lowering (expertise): 30 mm; axle load to: 1015 kg

FORD

FORD FOCUS II Saloon (DA_)

B12 PK	**1.6 TDCi, 1.8 TDCi, 2.0, 2.0 TDCi, 400h** 04/05 - 66 -107 kW	**46-181299**		Conditions see certificates VA: lowering (expertise): 30 mm; axle load to: 1070 kg HA: without ride height adjustment; lowering (expertise): 30 mm; axle load to: 1015 kg
B14	**1.4, 1.6, 1.6 TDCi, 1.6 Ti, 1.8, 1.8 Flexifuel, 1.8 Ghia Flexifuel, 1.8 TDCi, 2.0, 2.0 TDCi, 400h** 04/05 - 59 -107 kW	**47-121225**		Conditions see certificates VA: lowering (expertise): 30-50 mm; axle load to: 1070 kg HA: lowering (expertise): 30-50 mm; axle load to: 1090 kg
B16 PSS9	**1.4, 1.6, 1.6 TDCi, 1.6 Ti, 1.8, 1.8 Flexifuel, 1.8 Ghia Flexifuel, 1.8 TDCi, 2.0, 2.0 TDCi, 400h** 04/05 - 59 -107 kW	**48-121262**		Conditions see certificates VA: lowering (expertise): 30-50 mm; axle load to: 1070 kg HA: lowering (expertise): 30-50 mm; axle load to: 1090 kg

FORD FOCUS II Turnier (DAW_)

B1	**1.4, 1.6, 1.6 LPG, 1.6 TDCi, 1.6 Ti, 1.8, 1.8 Flexifuel, 1.8 Ghia FFV Flexifuel, 1.8 TDCi, 2.0, 2.0 LPG, 2.0 TDCi** 11/04 - 59 -107 kW	**12-224166**	**12-224173**	VA: with ball bearing
B3	**1.4, 1.6, 1.6 LPG, 1.6 Ti** 11/04 - 59 -85 kW	**37-000806**	**36-172214**	with standard chassis
B3	**1.6 TDCi, 1.8, 1.8 Flexifuel, 1.8 Ghia FFV Flexifuel, 1.8 TDCi, 2.0, 2.0 LPG, 2.0 TDCi** 11/04 - 66 -107 kW	*37-172183*	**36-172214**	with standard chassis
B4	**1.4, 1.6, 1.6 LPG, 1.6 TDCi, 1.6 Ti, 1.8, 1.8 Flexifuel, 1.8 Ghia FFV Flexifuel, 1.8 TDCi, 2.0, 2.0 LPG, 2.0 TDCi** 11/04 - 59 -107 kW	**22-112811** ↰ **22-112880** ↱	**19-138411**	
B6 Sport	**1.4, 1.6, 1.6 LPG, 1.6 TDCi, 1.6 Ti, 1.8, 1.8 Flexifuel, 1.8 Ghia FFV Flexifuel, 1.8 TDCi, 2.0, 2.0 LPG, 2.0 TDCi** 11/04 - 59 -107 kW	**35-110736** ↰ **35-110743** ↱	**24-124508**	
B8	**1.4, 1.6, 1.6 LPG, 1.6 TDCi, 1.6 Ti, 1.8, 1.8 Flexifuel, 1.8 Ghia FFV Flexifuel, 1.8 TDCi, 2.0, 2.0 LPG, 2.0 TDCi** 11/04 - 59 -107 kW	**35-110767** ↰ **35-110774** ↱	**24-124515**	
B12 PK	**1.4, 1.6, 1.6 Ti, 1.8** 11/04 - 59 -92 kW	**46-181305**		Conditions see certificates VA: lowering (expertise): 30 mm; axle load to: 1005 kg HA: without ride height adjustment; lowering (expertise): 30 mm; axle load to: 1090 kg
B12 PK	**1.6 TDCi, 1.8 TDCi, 2.0, 2.0 TDCi** 11/04 - 66 -107 kW	**46-181312**		Conditions see certificates VA: lowering (expertise): 30 mm; axle load to: 1070 kg HA: without ride height adjustment; lowering (expertise): 30 mm; axle load to: 1090 kg

FORD FOCUS II Convertible

B4	**1.6, 2.0, 2.0 TDCi** 10/06 - 74 -107 kW	**22-112811** ↰ **22-112880** ↱	**19-147291**	with standard chassis
B6 Sport	**1.6, 2.0, 2.0 TDCi** 10/06 - 74 -107 kW	**35-110736** ↰ **35-110743** ↱	**24-142182**	
B8	**1.6, 2.0, 2.0 TDCi** 10/06 - 74 -107 kW	**35-110767** ↰ **35-110774** ↱	**24-142199**	
B12 PK	**1.6, 2.0** 10/06 - 74 -107 kW	**46-187925**		Conditions see certificates VA: lowering (expertise): 30 mm; axle load to: 990 kg HA: without ride height adjustment; lowering (expertise): 30 mm; axle load to: 1065 kg
B12 PK	**2.0 TDCi** 10/06 - 100 kW	**46-187932**		Conditions see certificates VA: lowering (expertise): 30 mm; axle load to: 1070 kg HA: without ride height adjustment; lowering (expertise): 30 mm; axle load to: 1065 kg

F

FORD

FORD FOCUS II Convertible

FORD FOCUS III

B4	**1.6, 1.6 EcoBoost, 1.6 Flexifuel, 1.6 TDCi, 2.0 TDCi** 04/11 - 70 -134 kW	i.V. i.V.	**19-217154**	with standard chassis
B4	**1.6, 1.6 EcoBoost, 1.6 Flexifuel, 1.6 TDCi, 2.0 TDCi** 04/11 - 70 -134 kW	i.V. i.V.	**19-217154**	with sports suspension
B6 Sport	**1.6, 1.6 EcoBoost, 1.6 Flexifuel, 1.6 TDCi, 2.0 TDCi** 04/11 - 70 -134 kW	29-196500 29-196517	**24-196529**	with standard chassis
B8	**1.6, 1.6 EcoBoost, 1.6 Flexifuel, 1.6 TDCi, 2.0 TDCi** 04/11 - 70 -134 kW	29-196531 29-196548	**24-196550**	with sports suspension
B14	**1.6, 1.6 EcoBoost, 1.6 Flexifuel, 1.6 TDCi, 2.0 TDCi** 04/11 - 70 -134 kW	**47-196568**		Conditions see certificates VA: lowering (expertise): 35-50 mm; axle load to: 1100 kg HA: lowering (expertise): 30-50 mm; axle load to: 1025 kg

FORD FOCUS III Saloon

B4	**1.6, 1.6 EcoBoost, 1.6 Flexifuel, 1.6 TDCi, 2.0 TDCi** 04/11 - 70 -134 kW	i.V. i.V.	**19-217154**	with standard chassis
B4	**1.6, 1.6 EcoBoost, 1.6 Flexifuel, 1.6 TDCi, 2.0 TDCi** 04/11 - 70 -134 kW	i.V. i.V.	**19-217154**	with sports suspension
B6 Sport	**1.6, 1.6 EcoBoost, 1.6 Flexifuel, 1.6 TDCi, 2.0 TDCi** 04/11 - 70 -134 kW	29-196500 29-196517	**24-196529**	with standard chassis
B8	**1.6, 1.6 EcoBoost, 1.6 Flexifuel, 1.6 TDCi, 2.0 TDCi** 04/11 - 70 -134 kW	29-196531 29-196548	**24-196550**	with sports suspension
B14	**1.6, 1.6 EcoBoost, 1.6 Flexifuel, 1.6 TDCi, 2.0 TDCi** 04/11 - 70 -134 kW	**47-196568**		Conditions see certificates VA: lowering (expertise): 35-50 mm; axle load to: 1100 kg HA: lowering (expertise): 30-50 mm; axle load to: 1025 kg

FORD FOCUS III Turnier

B4	**1.6, 1.6 EcoBoost, 1.6 Flexifuel, 1.6 TDCi, 2.0 TDCi** 05/11 - 70 -134 kW	i.V. i.V.	**19-217161**	with standard chassis

FORD FUSION (JU_)

B1	**1.25, 1.4, 1.4 TDCi, 1.6, 1.6 TDCi** 08/02 - 50 -74 kW	**12-224340**	**12-224388**	VA: with ball bearing
B3	**1.25, 1.4, 1.4 TDCi, 1.6** 08/02 - 50 -74 kW	**37-171964**	**36-171958**	with standard chassis
B3	**1.25, 1.4, 1.4 TDCi, 1.6** 08/02 - 50 -74 kW	**37-171971**	**36-171958**	with standard chassis; Heavy Duty Version .
B3	**1.6 TDCi** 11/04 - 66 kW	**37-171971**	**36-171958**	with standard chassis
B4	**1.25, 1.4, 1.4 TDCi, 1.6, 1.6 TDCi** 08/02 - 50 -74 kW	**22-112743** **22-112750**	**19-112763**	
B6 Sport	**1.25, 1.4, 1.4 TDCi, 1.6, 1.6 TDCi** 08/02 - 50 -74 kW	**35-104384** **35-104391**	**24-104401**	

FORD

FORD GALAXY (WGR)

B1	**1.9 TDI, 2.0 i, 2.3 4x4, 2.3 16V, 2.8 i V6, 2.8 i V6 4x4, 2.8 V6** 03/95 - 05/06 66 -150 kW	**12-117659**		VA: with ball bearing
B3	**2.3 16V, 2.8 i V6, 2.8 V6** 04/00 - 05/06 103 -150 kW	**37-134327**	**38-131264**	with standard chassis
B3	**2.3 16V, 2.8 i V6, 2.8 V6** 04/00 - 05/06 103 -150 kW	**37-134457**	**38-131271**	with standard chassis; Heavy Duty Version .
B3	**2.3 4x4, 2.8 i V6 4x4** 04/96 - 04/00 107 -128 kW	**37-134457**	**38-131271**	with standard chassis
B3	**1.9 TDI, 2.0 i** 03/95 - 05/06 66 -110 kW	**37-134051**	**38-131257**	with standard chassis
B3	**1.9 TDI, 2.0 i** 03/95 - 05/06 66 -110 kW	**37-134327**	**38-131264**	with standard chassis; Heavy Duty Version .
B4	**1.9 TDI, 2.0 i, 2.3 4x4, 2.3 16V, 2.8 i V6, 2.8 i V6 4x4, 2.8 V6** 03/95 - 05/06 66 -150 kW	**22-046796**	**19-061078**	
B6 Sport	**1.9 TDI, 2.0 i, 2.3 4x4, 2.3 16V, 2.8 i V6, 2.8 i V6 4x4, 2.8 V6** 03/95 - 05/06 66 -150 kW	**35-103509**	**24-103527**	with standard chassis
B8	**1.9 TDI, 2.0 i, 2.3 4x4, 2.3 16V, 2.8 i V6, 2.8 i V6 4x4, 2.8 V6** 03/95 - 05/06 66 -150 kW	**35-103516**	**24-103534**	with sports suspension
B12 PK	**2.0 i, 2.3 16V** 11/95 - 05/06 85 -107 kW	**46-193872**		Conditions see certificates VA: lowering (expertise): 30 mm; axle load to: 1240 kg HA: lowering (expertise): 30 mm; axle load to: 1355 kg
B12 PK	**1.9 TDI, 2.8 i V6, 2.8 V6** 03/95 - 05/06 66 -150 kW	**46-193889**		Conditions see certificates VA: lowering (expertise): 30 mm; axle load to: 1260 kg HA: lowering (expertise): 30 mm; axle load to: 1355 kg

FORD GALAXY

B4	**1.6 EcoBoost, 1.6 TDCi, 1.8 TDCi, 2.0, 2.0 Flexifuel, 2.0 SCTi, 2.0 TDCi, 2.2 TDCi, 2.3** 07/07 - 74 -149 kW	**22-182869** **22-182876**	**19-170206**	with sports suspension; without electronic suspension control; with standard chassis; without ride height adjustment
B6 Sport	**1.6 EcoBoost, 1.6 TDCi, 1.8 TDCi, 2.0, 2.0 Flexifuel, 2.0 SCTi, 2.0 TDCi, 2.2 TDCi, 2.3** 07/07 - 74 -149 kW	**35-143598** **35-143604**	**24-143639**	
B8	**1.6 EcoBoost, 1.6 TDCi, 1.8 TDCi, 2.0, 2.0 Flexifuel, 2.0 SCTi, 2.0 TDCi, 2.2 TDCi, 2.3** 07/07 - 74 -149 kW	**35-143611** **35-143628**	**24-143646**	
B12 PK	**1.6 EcoBoost, 2.0, 2.0 Flexifuel, 2.0 SCTi** 03/10 - 107 -149 kW	**46-194336**		Conditions see certificates VA: lowering (expertise): 30 mm; axle load to: 1300 kg HA: lowering (expertise): 30 mm; axle load to: 1405 kg
B12 PK	**1.6 TDCi, 1.8 TDCi, 2.0 TDCi, 2.2 TDCi, 2.3** 07/07 - 74 -147 kW	**46-194343**		Conditions see certificates VA: lowering (expertise): 30 mm; axle load to: 1300 kg HA: lowering (expertise): 30 mm; axle load to: 1405 kg

FORD GRANADA (GGTL, GGFL)

B3	**1.7, 2.0** 03/72 - 12/75 48 -73 kW	*36-202706*		with standard chassis

FORD GRANADA Estate (GGNL)

B3	**1.7, 2.0** 03/72 - 12/75 48 -73 kW	*36-202706*		with standard chassis

FORD

FORD GRANADA Estate (GGNL)

FORD GRANADA Coupe (GGCL)

B3	**1.7, 2.0** 03/72 - 02/75 48 -73 kW	*36-202706*		with standard chassis

FORD GRANADA (GU)

B3	**1.6, 1.7, 2.0** 09/81 - 08/85 51 -77 kW	*36-202706*		with standard chassis
B3	**1.6, 1.7, 2.0** 08/79 - 08/81 51 -74 kW	*36-202706*		with standard chassis

FORD GRANADA Estate (GNU)

B3	**1.7, 2.0** 08/77 - 08/81 54 -74 kW	*36-202706*		with standard chassis
B3	**2.0** 09/81 - 08/85 66 -77 kW	*36-202706*	*36-202683*	with standard chassis
B3	**2.3, 2.5 D, 2.8, 2.8 i** 09/81 - 08/85 51 -110 kW		*36-202683*	

FORD KA (RB_)

B1	**1.0 i, 1.3 i** 09/96 - 11/08 36 -48 kW	**12-117161**		VA: with ball bearing
B3	**1.0 i** 07/97 - 11/08 38 -48 kW	**36-130047**		with standard chassis
B3	**1.3 i** 09/96 - 04/00 36 -44 kW	**36-130047**	**36-130054**	with standard chassis
B3	**1.3 i** 05/00 - 11/08 36 -44 kW	**36-130047**	**36-159208**	with standard chassis
B3	**1.3 i** 08/02 - 11/08 51 kW	**36-130047**	**36-159208**	with standard chassis
B4	**1.0 i, 1.3 i** 09/96 - 09/98 36 -44 kW	**22-045515**	**19-029276** HL	
B4	**1.0 i, 1.3 i** 10/98 - 04/00 36 -48 kW	**22-045515**	**19-104096** HO	
B4	**1.0 i, 1.3 i** 05/00 - 11/08 36 -48 kW	**22-045515**	**19-196299** HO	
B4	**1.3 i** 08/02 - 11/08 51 kW	**22-045515**	**19-196299** HO	
B4	**1.6 i** 07/03 - 11/08 70 kW	**i.V.** **i.V.**	**19-196299** HO	
B6 Sport	**1.0 i, 1.3 i** 09/96 - 08/98 36 -44 kW	*22-043320*	**24-026413** HL	
B6 Sport	**1.0 i, 1.3 i** 09/98 - 03/00 36 -48 kW	*22-043320*	**24-060950** HO	
B8	**1.0 i, 1.3 i** 09/96 - 09/98 36 -44 kW	*22-043559*	**24-026413** HL	

FORD				
FORD KA				
B3	**1.2** 10/08 - 51 kW	**36-200610**	**36-199693**	with standard chassis
B3	**1.2** 10/08 - 51 kW	**36-200009**	**36-200634**	with standard chassis; Heavy Duty Version .
B3	**1.3 TDCi** 10/08 - 55 kW	**36-200009**	**36-199693**	with standard chassis
B3	**1.3 TDCi** 10/08 - 55 kW		**36-200634**	with standard chassis; Heavy Duty Version .
B4	**1.0, 1.0 Flex, 1.2, 1.3 TDCi, 1.6, 1.6 Flex** 02/08 - 48 -75 kW	**22-197351** **22-197368**	**19-197227**	
B14	**1.0, 1.0 Flex, 1.2, 1.3 TDCi, 1.6, 1.6 Flex** 02/08 - 48 -75 kW	**47-155770**		Conditions see certificates VA: lowering (expertise): 20-40 mm; axle load to: 830 kg HA: lowering (expertise): 20-40 mm; axle load to: 640 kg
FORD KUGA				
B4	**2.0 TDCi, 2.0 TDCi 4x4, 2.0 TDCi AWD, 2.5, 2.5 4x4** 03/08 - 100 -147 kW	**22-182821** **22-182838**	**19-182841**	
B6 Sport	**2.0 TDCi, 2.0 TDCi 4x4, 2.0 TDCi AWD, 2.5, 2.5 4x4** 03/08 - 100 -147 kW	**35-156512** **35-156529**	**24-156530**	
FORD MAVERICK (UDS, UNS)				
B4	**2.4 i, 2.7 TD** 02/93 - 04/98 74 -92 kW	**19-105895**	**19-061092**	
B6 Offroad	**2.4 i, 2.7 TD** 02/93 - 04/98 74 -92 kW	**24-020763**	**24-020770**	
FORD MAVERICK				
B4	**2.0 16V, 2.3 16V, 3.0 24V, 3.0 V6 24V** 02/01 - 91 -149 kW	i.V. i.V.	**19-165998**	
FORD MONDEO I (GBP)				
B1	**1.6 i 16V, 1.8 i 16V, 1.8 i 16V 4x4, 1.8 TD, 2.0 i 16V, 2.0 i 16V 4x4, 2.5 i 24V** 02/93 - 08/96 65 -125 kW	**12-116676**	**12-117185**	VA: with ball bearing HA: without ball bearing
B3	**1.6 i 16V** 02/93 - 08/96 65 -66 kW	**36-129942**	**36-129928**	with standard chassis
B3	**1.6 i 16V** 02/93 - 08/96 65 -66 kW		**36-129935**	with standard chassis; Heavy Duty Version .
B3	**1.8 i 16V, 1.8 TD, 2.0 i 16V, 2.5 i 24V** 02/93 - 08/96 65 -125 kW	**36-129959**	**36-129928**	with standard chassis
B3	**1.8 i 16V, 1.8 TD, 2.0 i 16V, 2.5 i 24V** 02/93 - 08/96 65 -125 kW		**36-129935**	with standard chassis; Heavy Duty Version .
B4	**1.6 i 16V, 1.8 i 16V, 1.8 i 16V 4x4, 1.8 TD, 2.0 i 16V, 2.5 i 24V** 02/93 - 09/94 65 -125 kW	**22-045607** **11-104957** SP	**22-045584** **11-104964** SP	
B4	**1.6 i 16V, 1.8 i 16V, 1.8 i 16V 4x4, 1.8 TD, 2.0 i 16V, 2.0 i 16V 4x4, 2.5 i 24V** 10/94 - 08/96 65 -125 kW	**22-045607** **11-104957** SP	**22-045621** **11-104964** SP	

FORD				
FORD MONDEO I Saloon (GBP)				
B1	**1.6 i 16V, 1.8 4x4, 1.8 i 16V, 1.8 TD, 2.0 i 16V, 2.0 i 16V 4x4, 2.5 i 24V** 02/93 - 08/96 65 -125 kW	**12-116676**	**12-117185**	VA: with ball bearing HA: without ball bearing
B3	**1.6 i 16V** 02/93 - 08/96 65 -66 kW	**36-129942**	**36-129928**	with standard chassis
B3	**1.6 i 16V** 02/93 - 08/96 65 -66 kW		**36-129935**	with standard chassis; Heavy Duty Version .
B3	**1.8 i 16V, 1.8 TD, 2.0 i 16V, 2.5 i 24V** 02/93 - 08/96 65 -125 kW	**36-129959**	**36-129928**	with standard chassis
B3	**1.8 i 16V, 1.8 TD, 2.0 i 16V, 2.5 i 24V** 02/93 - 08/96 65 -125 kW		**36-129935**	with standard chassis; Heavy Duty Version .
B4	**1.6 i 16V, 1.8 i 16V, 1.8 TD, 2.0 i 16V, 2.5 i 24V** 02/93 - 09/94 65 -125 kW	**22-045607** **11-104957** SP	**22-045584** **11-104964** SP	
B4	**1.6 i 16V, 1.8 4x4, 1.8 i 16V, 1.8 TD, 2.0 i 16V, 2.0 i 16V 4x4, 2.5 i 24V** 10/94 - 08/96 65 -125 kW	**22-045607** **11-104957** SP	**22-045621** **11-104964** SP	
FORD MONDEO I Estate (BNP)				
B1	**1.6 i 16V, 1.8 i 16V, 1.8 i 16V 4x4, 1.8 TD, 2.0 i 16V, 2.0 i 16V 4x4, 2.5 i 24V** 04/93 - 08/96 65 -125 kW	**12-116676**	**12-117185**	VA: with ball bearing HA: without ball bearing
B3	**1.6 i 16V, 1.8 i 16V, 1.8 TD, 2.0 i 16V, 2.5 i 24V** 04/93 - 08/96 65 -125 kW	**36-129959**	**36-133451**	with standard chassis
B3	**1.6 i 16V, 1.8 i 16V, 1.8 TD, 2.0 i 16V, 2.5 i 24V** 04/93 - 08/96 65 -125 kW		**36-129966**	with standard chassis; Heavy Duty Version .
B4	**1.6 i 16V, 1.8 i 16V, 1.8 i 16V 4x4, 1.8 TD, 2.0 i 16V, 2.0 i 16V 4x4** 04/93 - 08/96 65 -100 kW	**22-045607** **11-104957** SP	**19-045597** OIO	
B4	**2.5 i 24V** 07/94 - 08/96 125 kW	**22-045607** **11-104957** SP		
FORD MONDEO II (BAP)				
B1	**1.6 i, 1.6 i 16V, 1.8 i, 1.8 TD, 2.0 i, 2.5 24V, 2.5 ST 200** 09/96 - 11/00 66 -151 kW	**12-116676**	**12-117185**	VA: with ball bearing HA: without ball bearing
B3	**1.6 i, 1.6 i 16V, 1.8 i, 2.0 i** 09/96 - 11/00 66 -96 kW	**36-130016**	**36-129980**	with standard chassis
B3	**1.8 TD, 2.5 24V** 09/96 - 11/00 66 -125 kW	**36-130023**	**36-133468**	with standard chassis
B4	**1.6 i, 1.6 i 16V, 1.8 i, 1.8 TD, 2.0 i, 2.5 24V** 09/96 - 11/00 66 -125 kW	**22-045614** **11-104957** SP	**22-045621** **11-104964** SP	
FORD MONDEO II Saloon (BFP)				
B1	**1.6 i, 1.6 i 16V, 1.8 i, 1.8 TD, 2.0 i, 2.5 24V, 2.5 ST 200** 09/96 - 11/00 66 -151 kW	**12-116676**	**12-117185**	VA: with ball bearing HA: without ball bearing
B3	**1.6 i, 1.6 i 16V, 1.8 i, 2.0 i** 09/96 - 11/00 66 -96 kW	**36-130016**	**36-129980**	with standard chassis

FORD				
FORD MONDEO II Saloon (BFP)				
B3	**1.8 TD, 2.5 24V** 09/96 - 11/00 66 -125 kW	**36-130023**	**36-133468**	with standard chassis
B4	**1.6 i, 1.6 i 16V, 1.8 i, 1.8 TD, 2.0 i, 2.5 24V** 09/96 - 11/00 66 -125 kW	**22-045614** **11-104957** SP	**22-045621** **11-104964** SP	
FORD MONDEO II Estate (BNP)				
B1	**1.6 i, 1.6 i 16V, 1.8 i, 1.8 TD, 2.0 i, 2.5 24V, 2.5 ST 200** 09/96 - 11/00 66 -151 kW	**12-116676**	**12-117185**	VA: with ball bearing HA: without ball bearing
B3	**1.6 i, 1.6 i 16V, 1.8 i, 2.0 i** 09/96 - 11/00 66 -96 kW	**36-130016**	**36-129997**	with standard chassis
B3	**1.8 TD, 2.5 24V** 09/96 - 11/00 66 -125 kW	**36-130023**	**36-133475**	with standard chassis
B4	**1.6 i, 1.6 i 16V, 1.8 i, 1.8 TD, 2.0 i, 2.5 24V** 09/96 - 11/00 66 -125 kW	**22-045614** **11-104957** SP	**19-045597** OIO	
FORD MONDEO III (B5Y)				
B1	**1.8 16V, 1.8 SCi, 2.0 16V, 2.0 16V DI / TDDi, 2.0 16V TDDi / TDCi, 2.0 TDCi, 2.2 TDCi, 2.5 V6 24V, 3.0 V6 24V, ST220** 11/00 - 08/07 66 -166 kW	**12-224135**	**12-224142**	VA: with ball bearing
B3	**1.8 16V, 1.8 SCi, 2.0 16V** 11/00 - 08/07 81 -107 kW	**37-162948**	**36-162901**	with standard chassis
B3	**1.8 16V, 1.8 SCi, 2.0 16V** 11/00 - 08/07 81 -107 kW	**37-162931**		with standard chassis; Heavy Duty Version .
B3	**2.0 16V DI / TDDi, 2.0 16V TDDi / TDCi, 2.0 TDCi, 2.2 TDCi, 2.5 V6 24V, 3.0 V6 24V** 11/00 - 08/07 66 -150 kW	**37-162931**	**36-162901**	with standard chassis
B4	**1.8 16V, 1.8 SCi, 2.0 16V, 2.0 16V DI / TDDi, 2.0 16V TDDi / TDCi, 2.0 TDCi, 2.2 TDCi, 2.5 V6 24V, 3.0 V6 24V** 11/00 - 08/07 66 -150 kW	**22-138392**	**22-139924**	with standard chassis
B6 Sport	**1.8 16V, 1.8 SCi, 2.0 16V, 2.0 16V DI / TDDi, 2.0 16V TDDi / TDCi, 2.0 TDCi, 2.2 TDCi, 2.5 V6 24V, 3.0 V6 24V, ST220** 11/00 - 08/07 66 -166 kW	**35-051480**	**35-140627**	
B8	**1.8 16V, 1.8 SCi, 2.0 16V, 2.0 16V DI / TDDi, 2.0 16V TDDi / TDCi, 2.0 TDCi, 2.2 TDCi, 2.5 V6 24V, 3.0 V6 24V, ST220** 11/00 - 08/07 66 -166 kW	**35-140610**	**35-140634**	
FORD MONDEO III Saloon (B4Y)				
B1	**1.8 16V, 1.8 SCi, 2.0 16V, 2.0 16V DI / TDDi, 2.0 16V TDDi / TDCi, 2.0 TDCi, 2.2 TDCi, 2.5 V6 24V, 3.0 V6 24V, ST220** 11/00 - 08/07 66 -166 kW	**12-224135**	**12-224142**	VA: with ball bearing
B3	**1.8 16V, 1.8 SCi, 2.0 16V** 11/00 - 08/07 81 -107 kW	**37-162948**	**36-162901**	with standard chassis

FORD

FORD MONDEO III Saloon (B4Y)

B3	**1.8 16V, 2.0 16V** 11/00 - 08/07 81 -107 kW	**37-162931**		with standard chassis; Heavy Duty Version .
B3	**2.0 16V DI / TDDi, 2.0 16V TDDi / TDCi, 2.0 TDCi, 2.2 TDCi, 2.5 V6 24V, 3.0 V6 24V** 11/00 - 08/07 66 -150 kW	**37-162931**	**36-162901**	with standard chassis
B4	**1.8 16V, 1.8 SCi, 2.0 16V, 2.0 16V DI / TDDi, 2.0 16V TDDi / TDCi, 2.0 TDCi, 2.2 TDCi, 2.5 V6 24V, 3.0 V6 24V** 11/00 - 08/07 66 -150 kW	**22-138392**	**22-139924**	with standard chassis
B6 Sport	**1.8 16V, 1.8 SCi, 2.0 16V, 2.0 16V DI / TDDi, 2.0 16V TDDi / TDCi, 2.0 TDCi, 2.2 TDCi, 2.5 V6 24V, 3.0 V6 24V, ST220** 11/00 - 08/07 66 -166 kW	**35-051480**	**35-140627**	
B8	**1.8 16V, 1.8 SCi, 2.0 16V, 2.0 16V DI / TDDi, 2.0 16V TDDi / TDCi, 2.0 TDCi, 2.2 TDCi, 2.5 V6 24V, 3.0 V6 24V, ST220** 11/00 - 08/07 66 -166 kW	**35-140610**	**35-140634**	

FORD MONDEO III Estate (BWY)

B1	**1.8 16V, 1.8 SCi, 2.0 16V, 2.0 16V DI / TDDi, 2.0 16V TDDi / TDCi, 2.0 TDCi, 2.2 TDCi, 2.5 V6 24V, 3.0 V6 24V, ST220** 11/00 - 08/07 66 -166 kW	**12-224135**	**12-224142**	VA: with ball bearing
B3	**1.8 16V, 1.8 SCi, 2.0 16V** 11/00 - 08/07 81 -107 kW	**37-162948**	**36-162895**	with standard chassis
B3	**1.8 16V, 1.8 SCi, 2.0 16V** 11/00 - 08/07 81 -107 kW		**36-162888**	with standard chassis; with ride height adjustment
B3	**1.8 16V, 2.0 16V** 11/00 - 08/07 81 -107 kW	**37-162931**		with standard chassis; Heavy Duty Version .
B3	**2.0 16V DI / TDDi, 2.0 16V TDDi / TDCi, 2.0 TDCi, 2.2 TDCi, 2.5 V6 24V, 3.0 V6 24V** 11/00 - 08/07 66 -150 kW	**37-162931**	**36-162895**	with standard chassis
B3	**2.0 16V DI / TDDi, 2.0 16V TDDi / TDCi, 2.0 TDCi, 2.2 TDCi, 2.5 V6 24V, 3.0 V6 24V** 11/00 - 08/07 66 -150 kW		**36-162888**	with standard chassis; with ride height adjustment
B4	**1.8 16V, 1.8 SCi, 2.0 16V, 2.0 16V DI / TDDi, 2.0 16V TDDi / TDCi, 2.0 TDCi, 2.2 TDCi, 2.5 V6 24V, 3.0 V6 24V** 11/00 - 08/07 66 -150 kW	**22-138392**	**19-138404** OIO	with standard chassis HA: without ride height adjustment
B6 Sport	**1.8 16V, 1.8 SCi, 2.0 16V, 2.0 16V DI / TDDi, 2.0 16V TDDi / TDCi, 2.0 TDCi, 2.2 TDCi, 2.5 V6 24V, 3.0 V6 24V, ST220** 11/00 - 08/07 66 -166 kW	**35-051480**	**24-066754** OIO	HA: without ride height adjustment
B8	**1.8 16V, 1.8 SCi, 2.0 16V, 2.0 16V DI / TDDi, 2.0 16V TDDi / TDCi, 2.0 TDCi, 2.2 TDCi, 2.5 V6 24V, 3.0 V6 24V, ST220** 11/00 - 08/07 66 -166 kW	**35-140610**	**24-066754** OIO	HA: without ride height adjustment

FORD

FORD MONDEO III Estate (BWY)

B12 PK	**1.8 16V, 1.8 SCi, 2.0 16V** 11/00 - 08/07 81 -107 kW	**46-192608**		Conditions see certificates VA: lowering (expertise): 40 mm; axle load to: 1065 kg HA: without ride height adjustment; lowering (expertise): 30 mm; axle load to: 1140 kg
B12 PK	**1.8 16V, 1.8 SCi, 2.0 16V, 2.0 16V DI / TDDi, 2.0 16V TDDi / TDCi, 2.0 TDCi, 2.2 TDCi, 2.5 V6 24V, 3.0 V6 24V** 11/00 - 08/07 66 -150 kW	**46-192615**		Conditions see certificates VA: lowering (expertise): 40 mm; axle load to: 1200 kg HA: without ride height adjustment; lowering (expertise): 30 mm; axle load to: 1140 kg

FORD MONDEO IV

B4	**1.6 Ti, 1.8 TDCi, 2.0, 2.0 Flexifuel, 2.0 TDCi, 2.2 TDCi, 2.3, 2.5** 03/07 - 74 -162 kW	**22-182869** ↰ **22-182876** ↱	**19-170206**	without electronic suspension control; with standard chassis; with sports suspension; without ride height adjustment
B6 Sport	**1.6 Ti, 1.8 TDCi, 2.0, 2.0 Flexifuel, 2.0 TDCi, 2.2 TDCi, 2.3, 2.5** 03/07 - 74 -162 kW	**35-143598** ↰ **35-143604** ↱	**24-143639**	without ride height adjustment
B8	**1.6 Ti, 1.8 TDCi, 2.0, 2.0 Flexifuel, 2.0 TDCi, 2.2 TDCi, 2.3, 2.5** 03/07 - 74 -162 kW	**35-143611** ↰ **35-143628** ↱	**24-143646**	without ride height adjustment
B12 PK	**1.6 Ti, 2.0** 03/07 - 81 -107 kW	**46-192547**		without ride height adjustment; Conditions see certificates VA: lowering (expertise): 30 mm; axle load to: 1100 kg HA: lowering (expertise): 30 mm; axle load to: 1115 kg
B12 PK	**1.8 TDCi, 2.0 TDCi, 2.2 TDCi, 2.3, 2.5** 03/07 - 74 -162 kW	**46-192554**		without ride height adjustment; Conditions see certificates VA: lowering (expertise): 30 mm; axle load to: 1215 kg HA: lowering (expertise): 30 mm; axle load to: 1115 kg

FORD MONDEO IV Saloon

B4	**1.6 Ti, 1.8 TDCi, 2.0, 2.0 Flexifuel, 2.0 TDCi, 2.2 TDCi, 2.3, 2.5** 03/07 - 74 -162 kW	**22-182869** ↰ **22-182876** ↱	**19-170206**	without electronic suspension control; with standard chassis; with sports suspension; without ride height adjustment
B6 Sport	**1.6 Ti, 1.8 TDCi, 2.0, 2.0 Flexifuel, 2.0 TDCi, 2.2 TDCi, 2.3, 2.5** 03/07 - 74 -162 kW	**35-143598** ↰ **35-143604** ↱	**24-143639**	
B8	**1.6 Ti, 1.8 TDCi, 2.0, 2.0 Flexifuel, 2.0 TDCi, 2.2 TDCi, 2.3, 2.5** 03/07 - 74 -162 kW	**35-143611** ↰ **35-143628** ↱	**24-143646**	
B12 PK	**1.6 Ti, 2.0** 03/07 - 81 -107 kW	**46-192547**		without ride height adjustment; Conditions see certificates VA: lowering (expertise): 30 mm; axle load to: 1100 kg HA: lowering (expertise): 30 mm; axle load to: 1115 kg
B12 PK	**1.8 TDCi, 2.0 TDCi, 2.2 TDCi, 2.3, 2.5** 03/07 - 74 -162 kW	**46-192554**		without ride height adjustment; Conditions see certificates VA: lowering (expertise): 30 mm; axle load to: 1215 kg HA: lowering (expertise): 30 mm; axle load to: 1115 kg

FORD MONDEO IV Turnier

B4	**1.6 Ti, 1.8 TDCi, 2.0, 2.0 Flexifuel, 2.0 TDCi, 2.2 TDCi, 2.3, 2.5** 03/07 - 74 -162 kW	**22-182869** ↰ **22-182876** ↱	**19-170206**	without electronic suspension control; with standard chassis; with sports suspension; without ride height adjustment
B6 Sport	**1.6 Ti, 1.8 TDCi, 2.0, 2.0 Flexifuel, 2.0 TDCi, 2.2 TDCi, 2.3, 2.5** 03/07 - 74 -162 kW	**35-143598** ↰ **35-143604** ↱	**24-143639**	
B8	**1.6 Ti, 1.8 TDCi, 2.0, 2.0 Flexifuel, 2.0 TDCi, 2.2 TDCi, 2.3, 2.5** 03/07 - 74 -162 kW	**35-143611** ↰ **35-143628** ↱	**24-143646**	
B12 PK	**1.6 Ti, 2.0** 03/07 - 81 -107 kW	**46-192561**		without ride height adjustment; Conditions see certificates VA: lowering (expertise): 30 mm; axle load to: 1100 kg HA: lowering (expertise): 30 mm; axle load to: 1220 kg
B12 PK	**1.8 TDCi, 2.0 TDCi, 2.2 TDCi, 2.3, 2.5** 03/07 - 74 -162 kW	**46-192578**		without ride height adjustment; Conditions see certificates VA: lowering (expertise): 30 mm; axle load to: 1215 kg HA: lowering (expertise): 30 mm; axle load to: 1220 kg

FORD				
FORD ORION I (AFD)				
B2	**1.3, 1.6, 1.6 D, 1.6 i** 07/83 - 03/86 40 -77 kW	**17-053273** **11-101338** SP		
B3	**1.3, 1.6, 1.6 D** 07/83 - 03/86 40 -58 kW	**36-133338**	**36-129829**	with standard chassis
B3	**1.3, 1.6, 1.6 D** 07/83 - 03/86 40 -58 kW			with standard chassis; Heavy Duty Version .
B3	**1.6 i** 07/83 - 03/86 77 kW	**36-159307**	*36-159345*	with standard chassis
B4	**1.3, 1.6, 1.6 D, 1.6 i** 07/83 - 03/86 40 -77 kW	**22-040893** **11-101338** SP	**22-040862**	
FORD ORION II (AFF)				
B2	**1.3, 1.4, 1.4 CAT, 1.6, 1.6 D, 1.6 i, 1.6 i CAT, 1.8 D** 12/85 - 07/90 40 -77 kW	**17-053273**		
B3	**1.3, 1.4, 1.4 CAT, 1.6** 12/85 - 07/90 44 -66 kW	**36-133482**	**36-129829**	with standard chassis
B3	**1.6 i, 1.6 i CAT** 03/86 - 07/90 66 -77 kW	**36-133352**	**36-129829**	with standard chassis
B3	**1.6 D, 1.8 D** 12/85 - 07/90 40 -44 kW	**36-133505**	**36-129829**	with standard chassis
B4	**1.3, 1.4, 1.4 CAT, 1.6, 1.6 D, 1.6 i, 1.6 i CAT, 1.8 D** 12/85 - 07/90 40 -77 kW	**22-040893**	**22-040862**	
FORD ORION III (GAL)				
B1	**1.3, 1.4, 1.6, 1.6 i, 1.6 i 16V, 1.8 D, 1.8 i 16V, 1.8 TD** 07/90 - 12/93 44 -96 kW	**12-116669**		VA: with ball bearing
B3	**1.3, 1.4** 07/90 - 12/93 44 -54 kW	**36-133383**	**36-129904**	with standard chassis
B3	**1.3, 1.4, 1.6, 1.6 i, 1.6 i 16V, 1.8 D, 1.8 TD** 07/90 - 12/93 44 -77 kW	**36-133529**	**36-129911**	with standard chassis; Heavy Duty Version .
B3	**1.6, 1.6 i, 1.6 i 16V** 07/90 - 12/93 66 -77 kW	**36-133390**	**36-129904**	with standard chassis
B3	**1.8 D, 1.8 TD** 11/90 - 12/93 44 -66 kW	**36-133406**	**36-129904**	with standard chassis
B4	**1.3** 07/90 - 12/93 44 kW	**22-041135** **11-101338** SP	**19-019994** OIO	
B4	**1.4** 07/90 - 10/90 52 -54 kW	**22-041135** **11-101338** SP	**19-019994** OIO	mark: ex. Ghia, S
B4	**1.4** 11/90 - 12/93 52 -54 kW	**22-041159** **11-101338** SP	**19-019994** OIO	mark: ex. Ghia, S
B4	**1.4** 07/90 - 12/93 52 -54 kW	**22-041159** **11-101338** SP	**19-019994** OIO	mark: Ghia, S
B4	**1.6, 1.6 i, 1.6 i 16V, 1.8 D, 1.8 TD** 07/90 - 12/93 44 -77 kW	**22-041159** **11-101338** SP	**19-019994** OIO	

FORD

FORD ORION III (GAL)

B6 Sport	**1.3** 07/92 - 12/93 44 kW	**35-003984**	**24-015776** OIO	
B6 Sport	**1.4, 1.6** 07/90 - 12/93 52 -66 kW	**35-003984**	**24-015776** OIO	
B6 Sport	**1.6 i 16V** 07/92 - 12/93 66 kW	**35-003984**	**24-015776** OIO	
B6 Sport	**1.6 i, 1.8 D, 1.8 i 16V, 1.8 TD** 07/90 - 12/93 44 -96 kW	**35-003984**	**24-015776** OIO	
B8	**1.3** 07/90 - 12/93 44 kW	**35-040286**	**24-017534** OIO	
B8	**1.4, 1.6, 1.6 i, 1.6 i 16V** 07/90 - 12/93 52 -77 kW	**35-040286**	**24-017534** OIO	
B8	**1.8 D, 1.8 i 16V, 1.8 TD** 11/90 - 12/93 44 -96 kW	**35-040286**	**24-017534** OIO	

FORD PUMA (EC_)

B1	**1.4 16V, 1.6 16V, 1.7 16V** 03/97 - 66 -92 kW	**12-117161**		VA: with ball bearing
B3	**1.4 16V, 1.6 16V, 1.7 16V** 03/97 - 66 -92 kW	**36-154432**	**36-154449**	with standard chassis
B6 Sport	**1.4 16V, 1.7 16V** 03/97 - 08/98 66 -92 kW	**22-043313**	**24-026413** TL	
B6 Sport	**1.4 16V, 1.7 16V** 09/98 - 66 -92 kW	**22-043313**	**24-060950** OI	
B8	**1.4 16V** 09/98 - 10/00 66 kW	**22-043337**	**24-060950** OI	
B8	**1.4 16V, 1.7 16V** 03/97 - 08/98 66 -92 kW	**22-043337**	**24-026413** TL	
MS	**1.4 16V, 1.7 16V** 03/97 - 09/98 66 -92 kW	**35-043898**	**24-027113** TL	mark: Puma Cup 99 VA: charakteristic: 230/100; Height Adjustable HA: charakteristic: 200/125

FORD P 100 II

B3	**2.0** 10/87 - 57 kW	*36-133611*		with standard chassis

FORD RANGER (TU_)

B4	**2.5 D 4x4, 2.5 TD 4x4** 10/99 - 06/06 57 -80 kW	**19-107899** OI	**19-132495** OIO	with standard chassis

FORD SCORPIO I (GAE, GGE)

B3	**1.8, 2.0, 2.0 i** 04/85 - 02/92 66 -88 kW	**36-129850**	**36-129843**	with standard chassis
B3	**2.4 i, 2.4 i CAT, 2.5 D, 2.8 i, 2.9 i, 2.9 i CAT** 10/87 - 02/92 51 -110 kW	**36-129867**	**36-129843**	with standard chassis
B3	**2.5 TD** 06/88 - 02/92 68 kW	**36-133550**	**36-129843**	with standard chassis

FORD

FORD SCORPIO I (GAE, GGE)

B4	**1.8, 2.0, 2.0 i, 2.4 i, 2.4 i CAT, 2.5 D, 2.8 i, 2.9 i CAT** 04/85 - 09/94 51 -110 kW	**22-040718**	**19-019345**	
B4	**2.0 i, 2.5 TD, 2.9 i** 02/92 - 09/94 68 -110 kW		**19-019345**	
B4	**2.0 i, 2.5 TD, 2.9 i** 09/86 - 01/92 68 -110 kW	**22-040718**	**19-019345**	
B4	**2.5 TD** 08/93 - 09/94 85 kW		**19-019345**	

FORD SCORPIO I Saloon (GGE)

B3	**1.8, 2.0 i** 01/86 - 02/92 66 -92 kW	**36-129850**	**36-129843**	with standard chassis
B3	**2.4 i** 10/88 - 10/94 92 kW	**36-129867**	**36-129843**	with standard chassis
B3	**2.9, 2.9 i** 09/86 - 12/94 107 kW	**36-129867**	**36-129843**	with standard chassis
B3	**2.5 D** 12/89 - 02/92 51 kW	**36-129867**	**36-129843**	with standard chassis
B3	**2.5 TD** 06/88 - 02/92 68 kW	**36-133550**	**36-129843**	with standard chassis
B4	**1.8, 1.9, 2.0 i** 01/86 - 09/94 66 -85 kW		**19-019345**	
B4	**2.0 i, 2.5 D, 2.5 TD, 2.9 i** 09/86 - 01/92 51 -107 kW	**22-040718**	**19-019345**	
B4	**2.0 i, 2.5 D, 2.5 TD, 2.9, 2.9 i** 02/92 - 12/94 51 -107 kW		**19-019345**	
B4	**2.0 i, 2.4 i** 10/88 - 10/94 92 kW	**22-040718**	**19-019345**	
B4	**2.5 TD** 08/93 - 09/94 85 kW		**19-019345**	

FORD SCORPIO I Estate (GGE)

B3	**2.0 i** 09/91 - 09/94 85 -88 kW	**36-129850**	**36-154272**	with standard chassis
B3	**2.0 i, 2.4 i, 2.5 D, 2.5 TD, 2.9 i** 10/90 - 09/94 51 -107 kW		**36-154319**	with standard chassis; Heavy Duty Version .
B3	**2.4 i, 2.9 24V, 2.9 i** 09/91 - 09/94 92 -143 kW	**36-129867**	**36-154272**	with standard chassis
B3	**2.5 D, 2.5 TD** 10/90 - 09/94 51 -85 kW	**36-133550**	**36-154272**	with standard chassis

FORD SCORPIO II (GFR, GGR)

B3	**2.0 i, 2.0 i 16V** 10/94 - 08/98 85 -100 kW	**36-154364**	**36-154388**	with standard chassis
B3	**2.3 i 16V** 06/96 - 08/98 108 kW	**36-154364**		with standard chassis
B3	**2.3 i 16V** 06/96 - 08/98 108 kW		**36-154388**	with standard chassis; Heavy Duty Version .

FORD

FORD SCORPIO II (GFR, GGR)

B3	**2.5 TD, 2.9 i, 2.9 i 24V** 10/94 - 08/98 85 -152 kW	**37-154370**	**36-154388**	with standard chassis

FORD SCORPIO II Estate (GNR, GGR)

B3	**2.0 i, 2.0 i 16V** 10/94 - 08/98 85 -100 kW	**36-154364**	**36-163922**	with standard chassis
B3	**2.3 i 16V** 06/96 - 08/98 108 kW	**36-154364**	**36-163922**	with standard chassis
B3	**2.5 TD, 2.9 i, 2.9 i 24V** 10/94 - 08/98 85 -152 kW	**37-154370**	**36-163922**	with standard chassis

FORD SIERRA Hatchback (GBC)

B2	**1.3, 1.6, 1.8, 2.0, 2.0 i, 2.3, 2.3 D, 2.8 XR4i** 06/84 - 02/87 44 -110 kW		**15-069146** OIO	
B3	**1.3, 1.6, 2.0, 2.3** 08/82 - 04/84 44 -84 kW	**36-133567**	**36-129836**	with standard chassis
B3	**1.3, 1.6, 1.8, 2.0, 2.0 i, 2.3** 05/84 - 12/86 44 -85 kW	**36-129874**	**36-129836**	with standard chassis
B3	**1.3, 1.6, 1.8, 2.0, 2.0 i, 2.3, 2.3 D** 08/82 - 02/87 44 -85 kW		**36-154265**	with standard chassis; Heavy Duty Version .
B3	**2.3 D** 08/82 - 04/84 49 kW	**36-133574**	**36-129836**	with standard chassis
B3	**2.3 D** 05/84 - 12/86 49 kW	*36-133581*	**36-129836**	with standard chassis
B4	**1.3, 1.6, 2.0, 2.3, 2.3 D** 08/82 - 05/84 44 -84 kW	*22-040961* **11-101437** SP	**19-019703** OIO	with standard chassis
B4	**1.3, 1.6, 2.0, 2.3, 2.3 D** 06/84 - 02/87 44 -84 kW	**22-041029** **11-101437** SP	**19-019703** OIO	with standard chassis
B4	**1.6, 1.8, 2.0, 2.0 i** 08/84 - 12/86 58 -85 kW	**22-041029** **11-101437** SP	**19-019703** OIO	
B4	**2.8 XR4i** 06/84 - 12/86 105 -110 kW	**22-041029** **11-101437** SP	**19-019703** OIO	
B4	**2.8 XR4i** 08/82 - 05/84 105 -110 kW	*22-040961* **11-101437** SP	**19-019703** OIO	
B6 Sport	**1.3, 1.6, 1.8, 2.0, 2.0 i, 2.3, 2.3 D, 2.8 XR4i** 06/84 - 02/87 44 -110 kW	**35-040408**	**24-018067** OIO	
B6 Sport	**2.0 4x4, 2.8 i XR 4x4, 2.8 XR 4x4** 02/85 - 02/87 107 -150 kW	**22-041296**	**24-020602** OIO	
B8	**1.3, 1.6, 1.8, 2.0, 2.0 i, 2.3, 2.3 D, 2.8 XR4i** 06/84 - 02/87 44 -110 kW	**35-040415**	**24-018074** OIO	

FORD SIERRA Estate (BNC)

B3	**1.6, 2.0, 2.3** 08/82 - 04/84 55 -84 kW	**36-133567**	**36-134502**	with standard chassis
B3	**1.6, 1.8, 2.0, 2.3** 04/84 - 12/86 55 -85 kW	**36-129874**	**36-134502**	with standard chassis

FORD

FORD SIERRA Estate (BNC)

B3	**2.3 D** 08/82 - 04/84 49 kW	**36-133574**	**36-134502**	with standard chassis
B3	**2.3 D** 05/84 - 12/86 49 kW	*36-133581*	**36-134502**	with standard chassis
B4	**1.6, 2.0, 2.3, 2.3 D** 08/82 - 05/84 49 -84 kW	*22-040961* **11-101437** SP	*19-020013*	
B4	**1.6, 2.0, 2.3, 2.3 D** 06/84 - 12/86 49 -84 kW	**22-041029** **11-101437** SP	*19-020013*	
B4	**1.8, 2.0** 10/84 - 12/86 66 -85 kW	**22-041029** **11-101437** SP	*19-020013*	
B6 Sport	**1.6, 2.0, 2.3, 2.3 D, 2.8 XR4i** 08/82 - 05/84 49 -107 kW		*24-010146*	
B6 Sport	**1.6, 1.8, 2.0, 2.3, 2.3 D, 2.8 XR4i** 06/84 - 12/86 49 -107 kW	**35-040408**	*24-010146*	
B6 Sport	**2.8 i 4x4** 08/82 - 12/86 105 -107 kW	**22-041296**	*24-010146*	

FORD SIERRA Hatchback (GBC, GBG)

B2	**1.6, 1.6 i, 1.8, 1.8 TD, 2.0, 2.0 i, 2.0 i CAT, 2.3 D** 01/87 - 02/93 49 -92 kW		**15-069146** OIO	
B3	**1.6, 1.6 i, 1.8, 1.8 TD, 2.0, 2.0 i, 2.0 i CAT, 2.3 D, 2.8, 2.8 i, 2.9 i** 01/87 - 02/93 49 -110 kW		**36-154265**	with standard chassis; Heavy Duty Version .
B3	**1.6, 1.6 i, 1.8, 2.0, 2.0 i, 2.0 i CAT** 01/87 - 02/93 55 -92 kW	**36-129874**	**36-129836**	with standard chassis
B3	**2.0 4x4, 2.8 i XR 4x4, 2.9 i XR 4x4** 08/88 - 03/93 88 -110 kW	**36-159192**	**36-159239**	with standard chassis
B3	**2.8, 2.8 i, 2.9 i** 01/87 - 02/93 105 -110 kW	*36-133604*	**36-129836**	with standard chassis
B3	**1.8 TD, 2.3 D** 01/87 - 02/93 49 -55 kW	*36-133611*	**36-129836**	with standard chassis
B4	**1.6, 1.6 i, 1.8, 1.8 TD, 2.0, 2.0 i, 2.0 i CAT, 2.3 D, 2.8, 2.8 i, 2.9 i** 01/87 - 02/93 49 -110 kW	**22-041029** **11-101437** SP	**19-019703** OIO	
B6 Sport	**1.6, 1.6 i, 1.8, 1.8 TD, 2.0, 2.0 i, 2.0 i CAT, 2.3 D, 2.8, 2.8 i, 2.9 i** 01/87 - 02/93 49 -110 kW	**35-040408**	**24-018067** OIO	
B6 Sport	**2.0 RS Cosworth** 11/87 - 01/90 150 kW	**22-041302**	**24-020602** OIO	
B6 Sport	**2.0 4x4, 2.0 16V Cosworth 4x4, 2.0 16V Cosworth 4x4 CAT, 2.8 i XR 4x4, 2.9 i XR 4x4** 08/88 - 03/93 88 -162 kW	**22-041296**	**24-020602** OIO	
B8	**1.6, 1.6 i, 1.8, 1.8 TD, 2.0, 2.0 i, 2.0 i CAT, 2.3 D, 2.8, 2.8 i, 2.9 i** 01/87 - 02/93 49 -110 kW	**35-040415**	**24-018074** OIO	
MS	**2.0 RS Cosworth** 11/87 - 01/90 150 kW	i.V.	*24-044578*	mark: Race Gruppe N VA: charakteristic: 320/250; charakteristic: 370/330; charakteristic: 345/300; Height Adjustable

FORD

FORD SIERRA (GBG, GB4)

B2	**1.6, 1.6 i, 1.8, 1.8 TD, 2.0, 2.0 i, 2.0 i CAT, 2.3 D** 01/87 - 02/93 49 -85 kW		**15-069146**	
B3	**1.6, 1.6 i, 1.8, 2.0, 2.0 i, 2.0 i CAT** 01/87 - 02/93 53 -92 kW	**36-129874**	**36-129836**	with standard chassis
B3	**1.6, 1.6 i, 1.8, 1.8 TD, 2.0, 2.0 i, 2.0 i CAT, 2.3 D, 2.8 i, 2.9 i** 08/87 - 02/93 49 -110 kW		**36-154265**	with standard chassis; Heavy Duty Version .
B3	**2.0 4x4, 2.9 4x4** 08/88 - 02/93 88 -110 kW	**36-159192**	**36-159239**	with standard chassis
B3	**2.8 i, 2.9 i** 08/87 - 02/93 105 -110 kW	*36-133604*	**36-129836**	with standard chassis
B3	**1.8 TD, 2.3 D** 01/87 - 02/93 49 -55 kW	*36-133611*	**36-129836**	with standard chassis
B4	**1.6, 1.6 i, 1.8, 1.8 TD, 2.0, 2.0 i, 2.0 i CAT, 2.3 D** 01/87 - 02/93 49 -85 kW	**22-041029** **11-101437** SP	**19-019703**	
B6 Sport	**1.6, 1.6 i, 1.8, 1.8 TD, 2.0, 2.0 i, 2.0 i CAT, 2.3 D, 2.8 i, 2.9 i** 08/87 - 02/93 49 -110 kW	**35-040408**	**24-018067**	
B6 Sport	**2.0 4x4, 2.0 16V Cosworth 4x4, 2.9 4x4** 08/88 - 02/93 88 -162 kW	**22-041296**	**24-020602**	
B6 Sport	**2.0 RS Cosworth** 01/87 - 12/90 150 kW	**22-041302**	**24-020602**	
B8	**1.6, 1.6 i, 1.8, 1.8 TD, 2.0, 2.0 i, 2.0 i CAT, 2.3 D, 2.8 i, 2.9 i** 06/84 - 02/93 49 -110 kW	**35-040415**	**24-018074**	

FORD SIERRA Estate (BNG)

B3	**1.6, 1.6 i, 1.8, 1.9, 2.0, 2.0 i, 2.0 i CAT** 01/87 - 02/93 53 -92 kW	**36-129874**	**36-134502**	with standard chassis
B3	**1.8 TD, 2.3 D** 01/87 - 02/93 49 -55 kW	*36-133611*	**36-134502**	with standard chassis
B4	**1.6, 1.6 i, 1.8, 1.8 TD, 1.9, 2.0, 2.0 i, 2.0 i CAT, 2.3 D** 01/87 - 02/93 49 -92 kW	**22-041029** **11-101437** SP	*19-020013*	
B6 Sport	**1.6, 1.6 i, 1.8, 1.8 TD, 1.9, 2.0, 2.0 i, 2.0 i CAT, 2.3 D, 2.8 i, 2.9, 2.9 i** 01/87 - 02/93 49 -110 kW	**35-040408**	*24-010146*	
B6 Sport	**2.0 4x4, 2.8 4x4, 2.8 i 4x4, 2.9 4x4** 08/88 - 02/93 88 -110 kW	**22-041296**	*24-010146*	
B8	**1.6, 1.6 i, 1.8, 1.8 TD, 1.9, 2.0, 2.0 i, 2.0 i CAT, 2.3 D, 2.8 i, 2.9, 2.9 i** 01/87 - 02/93 49 -110 kW	**35-040415**	*24-010146*	

FORD S-MAX

B4	**1.6 EcoBoost, 1.6 TDCi, 1.8 TDCi, 2.0, 2.0 EcoBoost, 2.0 Flexifuel, 2.0 SCTi, 2.0 TDCi, 2.2 TDCi, 2.3, 2.5 ST** 05/06 - 74 -176 kW	**22-182869** **22-182876**	**19-170206**	with sports suspension; with standard chassis; without electronic suspension control; without ride height adjustment

FORD				
FORD S-MAX				
B6 Sport	**1.6 EcoBoost, 1.6 TDCi, 1.8 TDCi, 2.0, 2.0 EcoBoost, 2.0 Flexifuel, 2.0 SCTi, 2.0 TDCi, 2.2 TDCi, 2.3, 2.5 ST** 05/06 - 74 -176 kW	**35-143598** **35-143604**	**24-143639**	
B8	**1.6 EcoBoost, 1.6 TDCi, 1.8 TDCi, 2.0, 2.0 EcoBoost, 2.0 Flexifuel, 2.0 SCTi, 2.0 TDCi, 2.2 TDCi, 2.3, 2.5 ST** 05/06 - 74 -176 kW	**35-143611** **35-143628**	**24-143646**	
B12 PK	**1.6 EcoBoost, 2.0, 2.0 EcoBoost, 2.0 Flexifuel, 2.0 SCTi** 03/10 - 107 -176 kW	**46-193957**		Conditions see certificates VA: lowering (expertise): 30 mm; axle load to: 1300 kg HA: lowering (expertise): 30 mm; axle load to: 1405 kg
B12 PK	**1.6 TDCi, 1.8 TDCi, 2.0 TDCi, 2.2 TDCi, 2.3, 2.5 ST** 05/06 - 74 -162 kW	**46-193940**		Conditions see certificates VA: lowering (expertise): 30 mm; axle load to: 1300 kg HA: lowering (expertise): 30 mm; axle load to: 1405 kg
FORD STREET KA				
B3	**1.6** 05/03 - 07/05 70 kW	**36-219636**	**36-219643**	with standard chassis
FORD TAUNUS (GBTS, GBFS, CBTS)				
B3	**1.3, 1.6, 2.0, 2.3** 05/75 - 07/79 40 -79 kW	*36-202713*		with standard chassis
FORD TAUNUS Turnier (GBNS)				
B3	**1.3, 1.6, 2.0, 2.3** 05/75 - 08/79 40 -79 kW	*36-202713*		with standard chassis
FORD TAUNUS '80 (GBS, GBNS)				
B3	**1.3, 1.6, 2.0, 2.3** 07/79 - 07/82 43 -84 kW	*36-202713*		with standard chassis
FORD ECONOVAN (KBA, KCA)				
B4	**1.4, 2.0 D** 03/86 - 03/92 41 -48 kW		*19-028712*	
FORD ECONOVAN Box (KAA)				
B4	**1.4, 2.0 D** 03/86 - 03/92 41 -48 kW		*19-028712*	
FORD TOURNEO CONNECT				
B1	**1.8 16V, 1.8 Di, 1.8 TDCi, 1.8 Turbo Di** 06/02 - 55 -85 kW	**12-117888**		VA: with ball bearing
B4	**1.8 16V, 1.8 Di, 1.8 TDCi, 1.8 Turbo Di** 06/02 - 55 -85 kW	**22-143358** **22-143365**	**19-145754**	with standard chassis; To Payload 550 kg
B4	**1.8 16V, 1.8 Di, 1.8 TDCi, 1.8 Turbo Di** 06/02 - 55 -85 kW	**22-143372** **22-143389**	**19-146119**	with standard chassis; To Payload 725 kg
FORD TRANSIT CONNECT (P65_, P70_, P80_)				
B1	**1.8 16V, 1.8 Di, 1.8 TDCi** 06/02 - 55 -85 kW	**12-117888**		VA: with ball bearing
B4	**1.8 16V, 1.8 Di, 1.8 TDCi** 06/02 - 55 -85 kW	**22-143358** **22-143365**	**19-145754**	with standard chassis; To Payload 550 kg

FORD

FORD TRANSIT CONNECT (P65_, P70_, P80_)

B4	**1.8 16V, 1.8 Di, 1.8 TDCi** 06/02 - 55 -85 kW	**22-143372** **22-143389**	**19-146119** OIO	with standard chassis; To Payload 725 kg

FORD TRANSIT Bus (E_ _)

B1	**2.0, 2.0 i, 2.5 DI, 2.5 TD, 2.9 i** 01/91 - 51 -107 kW	**12-117048**		VA: without ball bearing
B2	**2.0, 2.0 i, 2.5 DI, 2.5 TD, 2.9 i** 01/91 - 51 -107 kW		**15-119469** OIO	
B3	**2.0, 2.0 i** 09/91 - 09/94 66 -72 kW	**36-201167**		with standard chassis; equipment: 80 / 100 / 115
B3	**2.0, 2.0 i** 09/91 - 09/94 66 -72 kW	**36-201150**		with standard chassis; equipment: 120/ 150S
B3	**2.0, 2.0 i, 2.0, 2.0 i, 2.0** 09/91 - 09/94 66 -72 kW	**36-201174**		with standard chassis; equipment: 100L / 150L
B3	**2.0, 2.0 i, 2.0, 2.0 i, 2.0** 09/91 - 09/94 66 -72 kW	**36-201143**		with standard chassis; equipment: 190
B3	**2.5 DI, 2.5 TD** 08/91 - 07/94 51 -74 kW	**36-201822**		with standard chassis; equipment: 80;100;115;120
B3	**2.5 DI, 2.5 TD** 08/91 - 07/94 51 -74 kW	**36-201815**		with standard chassis; equipment: 130;150L:190
B4	**2.0, 2.0 i, 2.5 DI, 2.5 TD, 2.9 i** 01/91 - 51 -107 kW	**22-135971**	**19-065649** OIO	

FORD TRANSIT Box (E_ _)

B1	**2.0, 2.0 i, 2.5 DI, 2.5 TD** 05/91 - 06/94 51 -74 kW	**12-117048**		VA: without ball bearing
B2	**2.0, 2.0 i, 2.5 DI, 2.5 TD** 05/91 - 06/94 51 -74 kW		**15-119469** OIO	
B3	**2.0, 2.0 i** 09/91 - 06/94 66 -72 kW	**36-201167**		with standard chassis; equipment: 80 / 100 / 115
B3	**2.0, 2.0 i** 09/91 - 06/94 66 -72 kW	**36-201150**		with standard chassis; equipment: 120/ 150S
B3	**2.5 DI, 2.5 TD** 05/91 - 06/94 51 -74 kW	**36-201822**		with standard chassis; equipment: 80;100;115;120
B3	**2.5 DI, 2.5 TD** 05/91 - 06/94 51 -74 kW	**36-201815**		with standard chassis; equipment: 130;150L:190
B4	**2.0, 2.0 i, 2.5 DI, 2.5 TD** 05/91 - 06/94 51 -74 kW	**22-135971**	**19-065649** OIO	

FORD TRANSIT Flatbed / Chassis (E_ _)

B3	**2.0** 09/91 - 08/94 72 kW	**36-201150**		with standard chassis; equipment: 120/ 150S
B3	**2.5 DI** 09/91 - 08/94 51 kW	**36-201174**		with standard chassis; equipment: 190EF
B3	**2.5 DI, 2.5 TD** 09/91 - 08/94 51 -74 kW	**36-201150**		with standard chassis; equipment: 80 / 100 / 115 / 120
B3	**2.5 DI, 2.5 TD** 09/91 - 08/94 59 -74 kW	**36-201815**		with standard chassis; equipment: 130 / 190

FORD

FORD TRANSIT Flatbed / Chassis (E_ _)

FORD TRANSIT Bus (E_ _)

B1	**2.0, 2.0 CNG, 2.5 DI, 2.5 TD** 07/94 - 06/00 51 -85 kW	**12-117048**		VA: without ball bearing
B2	**2.0, 2.0 CNG, 2.5 DI, 2.5 TD** 07/94 - 06/00 51 -85 kW		**15-119469** OIO	
B4	**2.0, 2.0 CNG, 2.5 DI, 2.5 TD** 07/94 - 06/00 51 -85 kW	**22-135971**	**19-065649** OIO	

FORD TRANSIT Box (E_ _)

B1	**2.0, 2.5 DI, 2.5 TD, 2.5 TDI** 06/94 - 03/00 51 -85 kW	**12-117048**		VA: without ball bearing
B2	**2.0, 2.5 DI, 2.5 TD, 2.5 TDI** 06/94 - 03/00 51 -85 kW		**15-119469** OIO	
B4	**2.0, 2.5 DI, 2.5 TD, 2.5 TDI** 06/94 - 03/00 51 -85 kW	**22-135971**	**19-065649** OIO	

FORD TRANSIT Bus (FD_ _, FB_ _, FS_ _, FZ_ _, FC_ _)

B1	**2.0, 2.0 [RWD], 2.0 DI, 2.0 TDCi, 2.3, 2.3 16V [RWD], 2.4 DI, 2.4 DI [RWD], 2.4 TD, 2.4 TDCi, 2.4 TDdi, 2.4 TDE** 08/00 - 05/06 55 -107 kW	**12-225385**		VA: with ball bearing
B3	**2.0, 2.0 DI, 2.0 TDCi** 08/00 - 05/06 55 -92 kW	**36-201280**		VA: equipment: 260S /280S; front wheel drive
B3	**2.0, 2.0 [RWD], 2.0 DI, 2.0 TDCi, 2.3, 2.3 16V [RWD], 2.4 DI, 2.4 DI [RWD], 2.4 TD, 2.4 TDCi, 2.4 TDdi, 2.4 TDE** 08/00 - 05/06 55 -107 kW	**36-197620**		with standard chassis; equipment: 280M;300S;330M; equipment: 330S;300L
B3	**2.0, 2.0 [RWD], 2.0 DI, 2.0 TDCi, 2.3, 2.3 16V [RWD], 2.4 DI, 2.4 DI [RWD], 2.4 TD, 2.4 TDCi, 2.4 TDdi, 2.4 TDE** 08/00 - 05/06 55 -107 kW	**36-201266**		for increased payload; Long Wheelbase VA: equipment: 350L 350 Jumbo, 350E
B3	**2.0, 2.0 [RWD], 2.0 DI, 2.0 TDCi, 2.3, 2.3 16V [RWD], 2.4 DI, 2.4 DI [RWD], 2.4 TD, 2.4 TDCi, 2.4 TDdi, 2.4 TDE** 08/00 - 05/06 55 -107 kW	**36-201204**		equipment: 330M;350M;300L;330L; equipment: 350L;350E;300M; Tyres: with dual tyres
B4	**2.0, 2.0 [RWD], 2.0 DI, 2.0 TDCi, 2.3, 2.3 16V [RWD], 2.4 DI, 2.4 DI [RWD], 2.4 TD, 2.4 TDCi, 2.4 TDdi, 2.4 TDE** 08/00 - 05/06 55 -107 kW	**22-164773**	**19-164786** OIO	with standard chassis
B4	**2.0, 2.0 [RWD], 2.0 DI, 2.0 TDCi, 2.3, 2.3 16V [RWD], 2.4 DI, 2.4 DI [RWD], 2.4 TD, 2.4 TDCi, 2.4 TDdi, 2.4 TDE** 08/00 - 05/06 55 -107 kW	**22-164773**	**19-165530** OIO	with standard chassis; mark: LPG
B4	**2.0, 2.0 [RWD], 2.0 DI, 2.3, 2.3 16V [RWD], 2.4 DI, 2.4 DI [RWD], 2.4 TD, 2.4 TDdi, 2.4 TDE** 05/01 - 09/02 55 -107 kW	**22-164773**	**19-172644** OIO	with standard chassis; with lowering air suspension on the RA
B4	**2.0, 2.0 [RWD], 2.0 DI, 2.0 TDCi, 2.3, 2.3 16V [RWD], 2.4 DI, 2.4 DI [RWD], 2.4 TD, 2.4 TDdi, 2.4 TDE** 09/02 - 05/06 55 -107 kW	**22-164773**	**19-172651** OIO	with standard chassis; with lowering air suspension on the RA

FORD

FORD TRANSIT Box (FA_ _)

B1	**2.0, 2.0 [RWD], 2.0 DI, 2.0 TDCi, 2.3, 2.3 16V [RWD], 2.4 DI, 2.4 DI [RWD], 2.4 TD, 2.4 TD All-wheel Drive, 2.4 TDCi, 2.4 TDdi, 2.4 TDE** 08/00 - 05/06 55 -107 kW	**12-225385**		VA: with ball bearing
B3	**2.0, 2.0 DI** 08/00 - 05/06 55 -84 kW	**36-201280**		equipment: 260S;280S
B3	**2.0, 2.0 [RWD], 2.0 DI, 2.0 TDCi, 2.3, 2.3 16V [RWD], 2.4 DI, 2.4 DI [RWD], 2.4 TD, 2.4 TDCi, 2.4 TDdi, 2.4 TDE** 08/00 - 05/06 55 -107 kW	**36-197620**		with standard chassis; equipment: 280M;300S;330M; equipment: 330S;300L
B3	**2.0, 2.0 [RWD], 2.0 DI, 2.0 TDCi, 2.3, 2.3 16V [RWD], 2.4 DI, 2.4 DI [RWD], 2.4 TD, 2.4 TDCi, 2.4 TDdi, 2.4 TDE** 08/00 - 05/06 55 -107 kW	**36-201266**		for increased payload; Long Wheelbase VA: equipment: 350L 350 Jumbo, 350E
B3	**2.0 [RWD], 2.0 DI, 2.0 TDCi, 2.3, 2.3 16V [RWD], 2.4 DI, 2.4 DI [RWD], 2.4 TD, 2.4 TDCi, 2.4 TDE, 2.0 DI, 2.0 TDCi, 2.3, 2.3 16V, 2.4 DI, 2.4 TDCi, 2.4 TDdi, 2.4 TDE** 08/00 - 05/06 55 -107 kW	**36-201204**		VA: equipment: 330M;350M;300L;330L; equipment: 350L;350E;300M
B4	**2.0, 2.0 [RWD], 2.0 DI, 2.3, 2.3 16V [RWD], 2.4 DI, 2.4 DI [RWD], 2.4 TD, 2.4 TD All-wheel Drive, 2.4 TDCi, 2.4 TDdi, 2.4 TDE** 08/00 - 05/06 55 -107 kW	**22-164773**	**19-164786**	with standard chassis
B4	**2.0, 2.0 [RWD], 2.0 DI, 2.3, 2.3 16V [RWD], 2.4 DI, 2.4 DI [RWD], 2.4 TD, 2.4 TD All-wheel Drive, 2.4 TDCi, 2.4 TDdi, 2.4 TDE** 08/00 - 05/06 55 -107 kW	**22-164773**	**19-165530**	with standard chassis; mark: LPG
B4	**2.0, 2.0 [RWD], 2.0 DI, 2.0 TDCi, 2.3, 2.3 16V [RWD], 2.4 DI, 2.4 DI [RWD], 2.4 TD, 2.4 TD All-wheel Drive, 2.4 TDdi, 2.4 TDE** 05/01 - 09/02 55 -107 kW	**22-164773**	**19-172644**	with standard chassis; with lowering air suspension on the RA
B4	**2.0, 2.0 [RWD], 2.0 DI, 2.0 TDCi, 2.3, 2.3 16V [RWD], 2.4 DI, 2.4 DI [RWD], 2.4 TD, 2.4 TD All-wheel Drive, 2.4 TDdi, 2.4 TDE** 09/02 - 05/06 55 -107 kW	**22-164773**	**19-172651**	with standard chassis; with lowering air suspension on the RA

FORD TRANSIT Flatbed / Chassis (FM_ _, FN_ _)

B1	**2.0 DI, 2.0 TDCi, 2.3, 2.3 16V, 2.4 DI, 2.4 TDCi, 2.4 TDdi, 2.4 TDE** 01/00 - 05/06 55 -107 kW	**12-225385**		VA: with ball bearing
B3	**2.0 DI, 2.0 TDCi, 2.3, 2.3 16V, 2.4 DI, 2.4 TDCi, 2.4 TDdi, 2.4 TDE** 01/00 - 05/06 55 -107 kW	**36-197620**		with standard chassis; equipment: 280S;300S;330S;300L
B3	**2.0 DI, 2.0 TDCi, 2.4 DI, 2.4 TDCi, 2.4 TDE** 01/00 - 05/06 55 -101 kW	**36-201266**		with standard chassis; equipment: 350L
B3	**2.0 DI, 2.0 TDCi, 2.4 DI, 2.4 TDCi, 2.4 TDE** 01/00 - 05/06 55 -101 kW	**36-201181**		with standard chassis; equipment: 330M;350E;350M
B4	**2.0 DI, 2.3, 2.3 16V, 2.4 DI, 2.4 TDCi, 2.4 TDdi, 2.4 TDE** 01/00 - 05/06 55 -107 kW	**22-164773**	**19-164786**	with standard chassis

FORD

FORD TRANSIT Flatbed / Chassis (FM_ _, FN_ _)

B4	**2.0 DI, 2.3, 2.3 16V, 2.4 DI, 2.4 TDCi, 2.4 TDdi, 2.4 TDE** 01/00 - 05/06 55 -107 kW	**22-164773**	**19-165530**	with standard chassis; mark: LPG
B4	**2.0 DI, 2.0 TDCi, 2.3, 2.3 16V, 2.4 DI, 2.4 TDdi, 2.4 TDE** 05/01 - 09/02 55 -107 kW	**22-164773**	**19-172644**	with standard chassis; with lowering air suspension on the RA
B4	**2.0 DI, 2.0 TDCi, 2.3, 2.3 16V, 2.4 DI, 2.4 TDdi, 2.4 TDE** 09/02 - 05/06 55 -107 kW	**22-164773**	**19-172651**	with standard chassis; with lowering air suspension on the RA

FORD TRANSIT TOURNEO

B4	**2.2 TDCi** 07/06 - 81 -103 kW	**22-170897**	**19-171814**	equipment: 260S, 280M, 280S; equipment: 300M, 300S, 330L; equipment: 330M, 330S, 350L; equipment: 350M
B4	**2.2 TDCi** 07/06 - 81 -103 kW	**22-170903**	**19-170749**	equipment: 350E

FORD TRANSIT Bus

B4	**2.2 TDCi, 2.4 TDCi, 3.2 TDCi** 04/06 - 63 -147 kW	**22-170897**	**19-171814**	equipment: 260S, 280M, 280S; equipment: 300M, 300S, 330L; equipment: 330M, 330S, 350L; equipment: 350M
B4	**2.2 TDCi, 2.4 TDCi, 3.2 TDCi** 04/06 - 63 -147 kW	**22-170903**	**19-170749**	equipment: 350E

FORD TRANSIT Box

B4	**2.2 TDCi, 2.3 16V, 2.4 TDCi, 3.2 TDCi** 04/06 - 63 -147 kW	**22-170897**	**19-171814**	equipment: 260S, 280M, 280S; equipment: 300M, 300S, 330L; equipment: 330M, 330S, 350L; equipment: 350M
B4	**2.2 TDCi, 2.3 16V, 2.4 TDCi, 3.2 TDCi** 04/06 - 63 -147 kW	**22-170903**	**19-170749**	equipment: 350E

FORD TRANSIT Flatbed / Chassis

B4	**2.2 TDCi, 2.3 16V, 2.4 TDCi, 3.2 TDCi** 04/06 - 63 -147 kW	**22-170897**	**19-171814**	equipment: 260S, 280M, 280S; equipment: 300M, 300S, 330L; equipment: 330M, 330S, 350L; equipment: 350M
B4	**2.2 TDCi, 2.3 16V, 2.4 TDCi, 3.2 TDCi** 04/06 - 63 -147 kW	**22-170903**	**19-170749**	equipment: 350E

CHANGAN FORD MAZDA

CHANGAN FORD MAZDA FIESTA

B14	**1.3, 1.5** 02/09 - 63 -76 kW	**47-167490**		Conditions see certificates VA: lowering (expertise): 25-40 mm; axle load to: 850 kg HA: lowering (expertise): 20-40 mm; axle load to: 765 kg

CHANGAN FORD MAZDA FOCUS Hatchback (CD5)

B4	**1.8, 2.0** 08/06 - 91 -104 kW	**22-112811** **22-112880**	**19-119526**	
B6 Sport	**1.8, 2.0** 08/06 - 91 -104 kW	**35-110736** **35-110743**	**24-196529**	
B8	**1.8, 2.0** 08/06 - 91 -104 kW	**35-110767** **35-110774**	**24-196550**	
B14	**1.8, 2.0** 08/06 - 91 -104 kW	**47-121225**		Conditions see certificates VA: lowering (expertise): 30-50 mm; axle load to: 1070 kg HA: lowering (expertise): 30-50 mm; axle load to: 1090 kg
B16 PSS9	**1.8, 2.0** 08/06 - 91 -104 kW	**48-121262**		Conditions see certificates VA: lowering (expertise): 30-50 mm; axle load to: 1070 kg HA: lowering (expertise): 30-50 mm; axle load to: 1090 kg

CHANGAN FORD MAZDA

CHANGAN FORD MAZDA FOCUS Hatchback (CD5)

CHANGAN FORD MAZDA FOCUS Saloon (CD4)

B4	**1.8, 2.0** 09/05 - 91 -104 kW	**22-112811** **22-112880**	**19-119526**	
B6 Sport	**1.8, 2.0** 09/05 - 91 -104 kW	**35-110736** **35-110743**	**24-196529**	
B8	**1.8, 2.0** 09/05 - 91 -104 kW	**35-110767** **35-110774**	**24-196550**	
B14	**1.8, 2.0** 09/05 - 91 -104 kW	**47-121225**		Conditions see certificates VA: lowering (expertise): 30-50 mm; axle load to: 1070 kg HA: lowering (expertise): 30-50 mm; axle load to: 1090 kg
B16 PSS9	**1.8, 2.0** 09/05 - 91 -104 kW	**48-121262**		Conditions see certificates VA: lowering (expertise): 30-50 mm; axle load to: 1070 kg HA: lowering (expertise): 30-50 mm; axle load to: 1090 kg

CHANGAN FORD MAZDA MONDEO

B4	**2.0, 2.5** 05/03 - 105 -127 kW	**22-138392**	**22-139924**	with standard chassis
B6 Sport	**2.0, 2.5** 05/03 - 105 -127 kW	**35-051480**	**35-140627**	
B8	**2.0, 2.5** 05/03 - 105 -127 kW	**35-140610**	**35-140634**	

CHANGAN FORD MAZDA MONDEO

B4	**2.0, 2.3** 09/07 - 105 -119 kW	**22-182869** **22-182876**	**19-170206**	without electronic suspension control; with standard chassis; with sports suspension; without ride height adjustment
B6 Sport	**2.0, 2.3** 09/07 - 105 -119 kW	**35-143598** **35-143604**	**24-143639**	
B8	**2.0, 2.3** 09/07 - 105 -119 kW	**35-143611** **35-143628**	**24-143646**	

CHANGAN FORD MAZDA S-MAX MPV (BWS)

B4	**2.3** 01/07 - 118 -119 kW	**22-182869** **22-182876**	**19-170206**	with sports suspension; with standard chassis; without electronic suspension control; without ride height adjustment
B6 Sport	**2.3** 01/07 - 118 -119 kW	**35-143598** **35-143604**	**24-143639**	
B8	**2.3** 01/07 - 118 -119 kW	**35-143611** **35-143628**	**24-143646**	

FORD USA

FORD USA CONTOUR

B3	**2.0** 09/96 - 08/00 96 kW	**36-130016**	**36-129980**	with standard chassis
B3	**2.5, 2.5 SVT** 09/96 - 08/00 127 -149 kW	**36-130023**	**36-133468**	with standard chassis
B4	**2.0, 2.5, 2.5 SVT** 09/96 - 08/00 96 -149 kW	**22-045614** **11-104957** SP	**22-045621** **11-104964** SP	

FORD USA

FORD USA CROWN VICTORIA

B6 Sport	**4.6** 05/98 - 12/02 130 -167 kW	*24-184731*	**24-184755**	mark: Komfort
B6 Sport	**4.6** 05/98 - 12/02 130 -167 kW	*24-184724*	**24-184748**	mark: Heavy Duty; For police vehicles

FORD USA EXPLORER (U2)

B6 Offroad	**4.0, 4.0 V6, 4.9 V6** 01/93 - 115 -157 kW	**24-021319**	**24-021326**	rear wheel drive; without pneumatic suspension
B6 Offroad	**4.0, 4.0 V6, 4.9 V6** 01/93 - 115 -157 kW	**24-021333**	**24-021340**	one per wheel; all-wheel drive; without pneumatic suspension
B6 Offroad	**4.9 V6** 01/96 - 157 kW	**24-021333**	**24-021357** **24-021340**	two per wheel; without pneumatic suspension

FORD USA F250

B6 Offroad	**4.9, 5.8, 7.5** 09/86 - 09/91 110 -168 kW	**24-013284**		with standard chassis; rear wheel drive
B6 Offroad	**4.9 4x4, 5.8 All-wheel Drive, 7.3 Tdi All-wheel Drive, 7.5 4x4** 09/86 - 09/91 110 -170 kW	**24-016179**	**24-016186**	with standard chassis; all-wheel drive

FORD USA F250

B6 Offroad	**4.9, 5.8, 7.3 D, 7.3 Supercab XLT HD, 7.5** 10/91 - 09/96 136 -177 kW	**24-013284**		with standard chassis; rear wheel drive
B6 Offroad	**4.9 Supercab HD 4x4, 5.8 All-wheel Drive, 7.3 D 4x4, 7.3 TDi 4x4, 7.5 Supercab XLT HD 4x4** 10/91 - 04/97 135 -177 kW	**24-016179**	**24-016186**	with standard chassis; all-wheel drive

FORD USA MUSTANG (C)

B6 Sport	**3.8** 01/94 - 05/99 108 kW		*24-021494*	mark: Axle Wrap
B6 Sport	**3.8, 4.6, 4.6 GT, 4.6 Laredo, 4.6 LS** 01/94 - 09/03 108 -236 kW	*35-041382*	*24-064187*	
B6 Sport	**3.8 V6** 09/93 - 112 kW	*35-041382*	*24-021487*	
B6 Sport	**3.8 V6, 4.9 V8** 09/93 - 112 -160 kW		*24-021494*	mark: Axle Wrap
B6 Sport	**4.6, 4.6 GT, 4.6 Laredo, 4.6 LS** 01/94 - 09/03 160 -236 kW		*24-021494*	mark: Axle Wrap

FORD USA MUSTANG Convertible (C)

B6 Sport	**3.8 V6, 4.9 V8** 09/93 - 112 -160 kW		*24-021494*	mark: Axle Wrap
B6 Sport	**3.8 V6** 09/93 - 112 kW	*35-041382*	*24-021487*	
B6 Sport	**4.6 GT** 01/94 - 05/99 160 kW	*35-041382*	*24-064187*	

FORD USA MUSTANG

B6 Sport	**4.0 V6, 4.6 V8, 5.4 V8** 12/04 - 12/09 157 -355 kW	**35-223993**	**24-224000**	mark: Europa

FORD USA				
FORD USA MUSTANG				
B6 Sport	**4.0 V6, 4.6 V8, 5.4 V8** 12/04 - 12/09 157 -355 kW	**35-128717**	**24-122245**	Only for United States of America
B6 Sport	**4.0 V6, 4.6 V8, 5.4 V8** 01/10 - 157 -355 kW	**35-224013**	**24-224000**	mark: Europa
B6 Sport	**4.0 V6, 4.6 V8, 5.4 V8** 01/10 - 157 -355 kW	**35-212676**	**24-122245**	Only for United States of America
FORD USA MUSTANG Convertible				
B6 Sport	**4.0 V6, 4.6 V8, 5.4 V8** 12/05 - 12/09 157 -355 kW	**35-223993**	**24-224000**	mark: Europa
B6 Sport	**4.0 V6, 4.6 V8, 5.4 V8** 12/05 - 12/09 157 -355 kW	**35-128717**	**24-122245**	Only for United States of America
B6 Sport	**4.0 V6, 4.6 V8, 5.4 V8** 01/10 - 157 -355 kW	**35-224013**	**24-224000**	mark: Europa
B6 Sport	**4.0 V6, 4.6 V8, 5.4 V8** 01/10 - 157 -355 kW	**35-212676**	**24-122245**	Only for United States of America
FORD USA THUNDERBIRD Coupe				
B6 Sport	**3.8, 4.6** 01/93 - 12/97 104 -157 kW		*24-202664*	
FSO				
FSO 125P				
B6 Sport	**1.3, 1.5** 10/67 - 08/92 47 -55 kW	*24-005494*	*24-221726*	
FSO 125P Estate				
B6 Sport	**1.3, 1.5** 10/67 - 08/92 47 -55 kW	*24-005494*	*24-221726*	
FSO 126P				
B6 Sport	**0.6, 650** 07/72 - 09/00 17 -22 kW	*24-007405*	*24-007504*	
GAZ				
GAZ VOLGA (3102)				
B4	**2.1 D, 2.3 D, 2.4** 02/72 - 01/93 45 -77 kW	**19-135304**	**19-135311**	
B6 Sport	**2.1 D, 2.3 D, 2.4** 02/72 - 01/93 45 -77 kW	**24-027717**	**24-027724**	
GAZ VOLGA Estate (3102)				
B4	**2.1 D, 2.3 D, 2.4** 02/72 - 01/93 45 -77 kW	**19-135304**	**19-135311**	
B6 Sport	**2.1 D, 2.3 D, 2.4** 02/72 - 01/93 45 -77 kW	**24-027717**	**24-027724**	

F
G

GAZ				
GAZ VOLGA				
B4	**2.1 D, 2.3, 2.4, 2.4 D, 2.5** 01/97 - 59 -107 kW	**19-135304**	**19-135311**	
B6 Sport	**2.1 D, 2.3, 2.4, 2.4 D, 2.5** 01/97 - 59 -107 kW	**24-027717**	**24-027724**	
GAZ VOLGA Estate				
B4	**2.3, 2.4, 2.4 D, 2.5** 02/93 - 59 -107 kW	**19-135304**	**19-135311**	
B6 Sport	**2.3, 2.4, 2.4 D, 2.5** 02/93 - 59 -107 kW	**24-027717**	**24-027724**	
GAZ GAZELLE Bus				
B4	**2.3, 2.4 D** 10/93 - 08/01 67 -96 kW	**19-135328**	**19-135328**	
GAZ GAZELLE Box				
B4	**2.4, 2.4 D** 10/93 - 08/01 66 -67 kW	**19-135328**	**19-135328**	
GAZ GAZELLE Flatbed / Chassis				
B4	**2.4, 2.4 D** 10/93 - 08/01 66 -67 kW	**19-135328**	**19-135328**	
GEO				
GEO TRACKER Station Wagon				
B4	**1.6 i, 1.6 i 16V, 1.9 D, 2.0 i 16V, 2.0 i V6** 01/88 - 12/98 50 -100 kW		**19-028798**	
B6 Offroad	**1.6 i, 1.6 i 16V, 1.9 D, 2.0 i 16V, 2.0 i V6** 01/88 - 12/98 50 -100 kW	**35-003991**	**24-015882**	without ABS; rear wheel drive
GEO TRACKER Cabrio				
B4	**1.6 i, 1.6 i 16V, 2.0 i 16V** 01/88 - 12/98 59 -97 kW		**19-028798**	
B6 Offroad	**1.6 i, 1.6 i 16V, 2.0 i 16V** 01/88 - 12/98 59 -97 kW	**35-003991**	**24-015882**	without ABS; rear wheel drive
HOLDEN				
HOLDEN ASTRA Hatchback (LB, LC)				
B1	**1.5, 1.6 CD** 08/84 - 06/87 51 -52 kW	**12-125104**		VA: with ball bearing
B2	**1.5, 1.6 CD** 08/84 - 07/88 51 -52 kW	**16-031302** **11-101314** SP		-> CH.Nr.: J2791967; -> CH.Nr.: J5273427
B4	**1.5, 1.6 CD** 08/84 - 07/88 51 -52 kW	**21-030413** **11-101314** SP	**19-019864**	-> CH.Nr.: J2791967; -> CH.Nr.: J5273427
B6 Sport	**1.5, 1.6 CD** 08/84 - 06/87 51 -52 kW	**34-001424**	**24-004862**	

HOLDEN

HOLDEN ASTRA Hatchback (LB, LC)

B8	**1.5, 1.6 CD** 08/84 - 06/87 51 -52 kW	**34-003114**	**24-013932**	HA: charakteristic: 107/36
MS	**1.5, 1.6 CD** 08/84 - 06/87 51 -52 kW	**34-001462**	**24-000925**	mark: Cup VA: charakteristic: 230/30 HA: charakteristic: 160/50
MS	**1.5, 1.6 CD** 08/84 - 06/87 51 -52 kW	**34-030721**	*24-024846*	mark: Rallye1 VA: charakteristic: 270/120 HA: charakteristic: 210/90

HOLDEN ASTRA Hatchback (TR)

B1	**1.4 GL, 1.6 CD, 1.7 D, 1.8 i, 2.0 CDX** 08/95 - 09/98 60 -100 kW	**12-116812**		VA: with ball bearing
B2	**1.4 GL, 1.6 CD, 1.7 D, 1.8 i, 2.0 CDX** 08/95 - 09/98 60 -100 kW	**16-031548** **11-101369** *SP*	**15-062215**	
B4	**1.4 GL, 1.6 CD, 1.7 D, 1.8 i, 2.0 CDX** 08/95 - 09/98 60 -100 kW	**21-030260** **11-101369** *SP*	**19-019956**	
B6 Sport	**1.4 GL, 1.6 CD, 1.7 D, 1.8 i, 2.0 CDX** 08/95 - 09/98 60 -100 kW	**34-030035**	**24-015523**	
B8	**1.4 GL, 1.6 CD, 1.7 D, 1.8 i, 2.0 CDX** 08/95 - 09/98 60 -100 kW	**34-181577**	**24-015523**	
B10	**1.4 GL, 1.6 CD, 1.7 D, 1.8 i, 2.0 CDX** 08/95 - 09/98 60 -100 kW	**46-111920**		Conditions see certificates; manual transmission VA: lowering (expertise): 60 mm; axle load to: 900 kg HA: lowering (expertise): 40 mm; axle load to: 800 kg
B12 PK	**1.4 GL, 1.6 CD, 1.7 D, 1.8 i, 2.0 CDX** 08/95 - 09/98 60 -100 kW	**46-188861**		Conditions see certificates VA: lowering (expertise): 30 mm; axle load to: 870 kg HA: lowering (expertise): 30 mm; axle load to: 800 kg
B12 SL	**1.4 GL, 1.6 CD, 1.7 D, 1.8 i, 2.0 CDX** 08/95 - 09/98 60 -100 kW	**46-188885**		Conditions see certificates VA: lowering (expertise): 45-50 mm; axle load to: 900 kg HA: lowering (expertise): 30 mm; axle load to: 800 kg

HOLDEN ASTRA Saloon (TR)

B1	**1.4 GL, 1.6 CD, 1.7 D, 1.8 SRi** 08/95 - 09/98 60 -85 kW	**12-116812**		VA: with ball bearing
B2	**1.4 GL, 1.6 CD, 1.7 D, 1.8 SRi** 08/95 - 09/98 60 -85 kW	**16-031548** **11-101369** *SP*	**15-062215**	
B4	**1.4 GL, 1.6 CD, 1.7 D, 1.8 SRi** 08/95 - 09/98 60 -85 kW	**21-030260** **11-101369** *SP*	**19-019956**	
B6 Sport	**1.4 GL, 1.6 CD, 1.7 D, 1.8 SRi** 08/95 - 09/98 60 -85 kW	**34-030035**	**24-015523**	
B8	**1.4 GL, 1.6 CD, 1.7 D, 1.8 SRi** 08/95 - 09/98 60 -85 kW	**34-181577**	**24-015523**	
B10	**1.4 GL, 1.6 CD, 1.7 D, 1.8 SRi** 08/95 - 09/98 60 -85 kW	**46-111920**		Conditions see certificates; manual transmission VA: lowering (expertise): 60 mm; axle load to: 900 kg HA: lowering (expertise): 40 mm; axle load to: 800 kg
B12 PK	**1.4 GL, 1.6 CD, 1.7 D, 1.8 SRi** 08/95 - 09/98 60 -85 kW	**46-188861**		Conditions see certificates VA: lowering (expertise): 30 mm; axle load to: 870 kg HA: lowering (expertise): 30 mm; axle load to: 800 kg
B12 SL	**1.4 GL, 1.6 CD, 1.7 D, 1.8 SRi** 08/95 - 09/98 60 -85 kW	**46-188885**		Conditions see certificates VA: lowering (expertise): 45-50 mm; axle load to: 900 kg HA: lowering (expertise): 30 mm; axle load to: 800 kg

HOLDEN ASTRA Hatchback (TS)

B1	**1.6, 1.8, 1.8 SRi, 2.0 i Turbo, 2.2** 02/98 - 10/05 74 -147 kW	**12-117376**		VA: Hard Version; without ball bearing

HOLDEN				
HOLDEN ASTRA Hatchback (TS)				
B1	**1.6, 1.8, 1.8 SRi, 2.0 i Turbo, 2.2** 02/98 - 10/05 74 -147 kW	**12-117390**		VA: Soft Version; without ball bearing
B3	**1.6** 02/98 - 10/05 74 kW	**36-130146**	**38-130199**	with standard chassis
B3	**1.6** 02/98 - 10/05 74 kW	**36-130153**	**36-224067**	with standard chassis; Heavy Duty Version .
B3	**1.8, 1.8 SRi** 02/98 - 10/04 85 -92 kW	**36-130153**	**36-224067**	with standard chassis
B3	**1.8, 1.8 SRi** 02/98 - 10/04 85 -92 kW	**36-130160**		with standard chassis; Heavy Duty Version .
B3	**2.0 i Turbo, 2.2** 09/00 - 07/04 108 -147 kW	**36-130160**	**36-224067**	with standard chassis
B4	**1.6, 1.8, 1.8 SRi, 2.0 i Turbo, 2.2** 02/98 - 10/05 74 -147 kW	**22-053060** **22-053077** **11-101512** SP	**19-068756** OIO	with standard chassis
B6 Sport	**1.6, 1.8, 1.8 SRi, 2.0 i Turbo, 2.2** 02/98 - 10/05 74 -147 kW	**35-044338**	**24-027823** OIO	
B8	**1.6, 1.8, 1.8 SRi, 2.0 i Turbo, 2.2** 02/98 - 10/05 74 -147 kW	**35-044345**	**24-027830** OIO	
B12 PK	**1.6, 1.8, 1.8 SRi, 2.0 i Turbo, 2.2** 02/98 - 10/05 74 -147 kW	**46-188946**		Conditions see certificates VA: lowering (expertise): 30 mm; axle load to: 935 kg HA: lowering (expertise): 30 mm; axle load to: 820 kg
B12 PK	**1.6** 02/98 - 10/05 74 kW	**46-188984**		Conditions see certificates VA: lowering (expertise): 30 mm; axle load to: 845 kg HA: lowering (expertise): 30 mm; axle load to: 820 kg
B12 PK	**1.8, 1.8 SRi, 2.0 i Turbo, 2.2** 02/98 - 10/04 85 -147 kW	**46-188960**		Conditions see certificates VA: lowering (expertise): 30 mm; axle load to: 1035 kg HA: lowering (expertise): 30 mm; axle load to: 820 kg
B12 SL	**1.6, 1.8, 1.8 SRi, 2.0 i Turbo, 2.2** 02/98 - 10/05 74 -147 kW	**46-188939**		Conditions see certificates VA: lowering (expertise): 45-50 mm; axle load to: 965 kg HA: lowering (expertise): 30 mm; axle load to: 895 kg
HOLDEN ASTRA Saloon (TS)				
B1	**1.6, 1.8, 1.8 i** 02/98 - 74 -92 kW	**12-117376**		VA: Hard Version; without ball bearing
B1	**1.6, 1.8, 1.8 i** 02/98 - 74 -92 kW	**12-117390**		VA: Soft Version; without ball bearing
B3	**1.6** 09/00 - 74 kW	**36-130146**	**38-130199**	with standard chassis
B3	**1.6** 09/00 - 74 kW	**36-130153**	**36-224067**	with standard chassis; Heavy Duty Version .
B3	**1.8, 1.8 i** 02/98 - 10/04 85 -92 kW	**36-130153**	**36-224067**	with standard chassis
B3	**1.8, 1.8 i** 02/98 - 10/04 85 -92 kW	**36-130160**		with standard chassis; Heavy Duty Version .
B4	**1.6, 1.8, 1.8 i** 02/98 - 74 -92 kW	**22-053060** **22-053077** **11-101512** SP	**19-068756** OIO	with standard chassis
B6 Sport	**1.6, 1.8, 1.8 i** 02/98 - 74 -92 kW	**35-044338**	**24-027823** OIO	

HOLDEN

HOLDEN ASTRA Saloon (TS)

B8	**1.6, 1.8, 1.8 i** 02/98 - 74 -92 kW	**35-044345**	**24-027830** OIO	
B12 PK	**1.6, 1.8, 1.8 i** 02/98 - 74 -92 kW	**46-188946**		Conditions see certificates VA: lowering (expertise): 30 mm; axle load to: 935 kg HA: lowering (expertise): 30 mm; axle load to: 820 kg
B12 PK	**1.6** 09/00 - 74 kW	**46-188984**		Conditions see certificates VA: lowering (expertise): 30 mm; axle load to: 845 kg HA: lowering (expertise): 30 mm; axle load to: 820 kg
B12 PK	**1.8, 1.8 i** 02/98 - 10/04 85 -92 kW	**46-188960**		Conditions see certificates VA: lowering (expertise): 30 mm; axle load to: 1035 kg HA: lowering (expertise): 30 mm; axle load to: 820 kg
B12 SL	**1.6, 1.8, 1.8 i** 02/98 - 74 -92 kW	**46-188939**		Conditions see certificates VA: lowering (expertise): 45-50 mm; axle load to: 965 kg HA: lowering (expertise): 30 mm; axle load to: 895 kg

HOLDEN ASTRA Estate (TS)

B1	**1.6** 09/00 - 74 kW	**12-117376**		VA: Hard Version; without ball bearing
B1	**1.6** 09/00 - 74 kW	**12-117390**		VA: Soft Version; without ball bearing
B3	**1.6** 09/00 - 74 kW	**36-130146**	**38-130236**	with standard chassis
B3	**1.6** 09/00 - 74 kW	**36-130153**	**38-130243**	with standard chassis; Heavy Duty Version .
B4	**1.6** 09/00 - 74 kW	**22-053060** **22-053077** **11-101512** SP	**19-068763** OIO	with standard chassis; without ride height adjustment
B6 Sport	**1.6** 09/00 - 74 kW	**35-044338**	**24-027847** OIO	without ride height adjustment
B8	**1.6** 09/00 - 74 kW	**35-044345**	**24-027823** OIO	without ride height adjustment
B12 PK	**1.6** 09/00 - 74 kW	**46-188953**		without ride height adjustment; Conditions see certificates VA: lowering (expertise): 30 mm; axle load to: 935 kg HA: lowering (expertise): 30 mm; axle load to: 885 kg
B12 PK	**1.6** 09/00 - 74 kW	**46-188991**		without ride height adjustment; Conditions see certificates VA: lowering (expertise): 30 mm; axle load to: 845 kg HA: lowering (expertise): 30 mm; axle load to: 885 kg

HOLDEN ASTRA Convertible (TS)

B1	**1.6, 2.0 Turbo, 1.9 TDCi** 02/01 - 74 -147 kW	**12-117376**		VA: Hard Version; without ball bearing
B1	**1.6, 2.0 Turbo, 1.9 TDCi** 02/01 - 74 -147 kW	**12-117390**		VA: Soft Version; without ball bearing
B3	**1.6** 02/01 - 74 kW	**36-130146**	**38-130243**	with standard chassis
B3	**1.6** 02/01 - 74 kW	**36-130153**		with standard chassis; Heavy Duty Version .
B3	**1.8 i** 06/02 - 12/06 108 kW	**37-163563**	**38-163531**	with standard chassis
B3	**1.8 i** 06/02 - 12/06 108 kW	**37-163549**	**38-163524**	with standard chassis; Heavy Duty Version .
B4	**1.6, 2.0 Turbo** 02/01 - 74 -147 kW	**22-053060** **22-053077** **11-101512** SP	**19-068756** OIO	

HOLDEN				
HOLDEN ASTRA Convertible (TS)				
B4	**1.8 i** 06/02 - 12/06 108 kW	**22-141590** **22-141606** **i.V.** SP	**19-141626** OIO	without electronic suspension control; without IDS+ suspension
B6 Sport	**1.6, 2.0 Turbo** 02/01 - 74 -147 kW	**35-044338**	**24-027823** OIO	
B6 Sport	**1.8 i** 06/02 - 12/06 108 kW	**35-114666** **35-114673**	**24-118576** OIO	without IDS+ suspension
B8	**1.6, 2.0 Turbo** 02/01 - 74 -147 kW	**35-044345**	**24-027830** OIO	
B12 PK	**1.6, 2.0 Turbo** 02/01 - 74 -147 kW	**46-188908**		Conditions see certificates VA: lowering (expertise): 30 mm; axle load to: 1015 kg HA: lowering (expertise): 30 mm; axle load to: 845 kg
B12 PK	**1.8 i** 06/02 - 12/06 108 kW	**46-182128**		disconect ITS+; Conditions see certificates VA: lowering (expertise): 30 mm; axle load to: 970 kg HA: lowering (expertise): 30 mm; axle load to: 860 kg
B12 SL	**1.8 i** 06/02 - 12/06 108 kW	**46-182166**		disconect ITS+; Conditions see certificates VA: lowering (expertise): 45-50 mm; axle load to: 960 kg HA: lowering (expertise): 30 mm; axle load to: 860 kg
B14	**1.8 i** 06/02 - 12/06 108 kW	**47-121133**		disconect ITS+; Conditions see certificates VA: lowering (expertise): 30-50 mm; axle load to: 1060 kg HA: lowering (expertise): 30-50 mm; axle load to: 860 kg
HOLDEN ASTRA (AH)				
B3	**1.8, 1.8 i** 07/05 - 03/10 92 -103 kW	**37-163563**	**38-163531**	with standard chassis
B3	**1.8, 1.8 i** 07/05 - 03/10 92 -103 kW	**37-163549**	**38-163524**	with standard chassis; Heavy Duty Version .
B3	**1.9 CDTI, 2.0 Turbo, 2.2 i** 07/05 - 03/10 88 -147 kW	**37-163556**	**38-163531**	with standard chassis
B3	**1.9 CDTI, 2.0 Turbo, 2.2 i** 07/05 - 03/10 88 -147 kW		**38-163524**	with standard chassis; Heavy Duty Version .
B4	**1.8, 1.8 i, 1.9 CDTI, 2.0 Turbo, 2.2 i** 07/05 - 03/08 88 -147 kW	**22-141590** **22-141606** **i.V.** SP	**19-141626** OIO	without electronic suspension control; without IDS+ suspension
B6 Sport	**1.8, 1.8 i, 1.9 CDTI, 2.0 Turbo, 2.2 i** 07/05 - 03/08 88 -147 kW	**35-114635** **35-114642**	**24-114653** OIO	without IDS+ suspension
B8	**1.8, 1.8 i, 1.9 CDTI, 2.0 Turbo, 2.2 i** 07/05 - 03/08 88 -147 kW	**35-114666** **35-114673**	**24-114684** OIO	without IDS+ suspension
B12 PK	**1.8, 1.8 i** 07/05 - 03/10 92 -103 kW	**46-182128**		disconect ITS+; Conditions see certificates VA: lowering (expertise): 30 mm; axle load to: 970 kg HA: without ride height adjustment; lowering (expertise): 30 mm; axle load to: 860 kg
B12 PK	**1.9 CDTI, 2.0 Turbo, 2.2 i** 07/05 - 03/10 88 -147 kW	**46-182135**		disconect ITS+; Conditions see certificates VA: lowering (expertise): 30 mm; axle load to: 1075 kg HA: without ride height adjustment; lowering (expertise): 30 mm; axle load to: 860 kg
B12 SL	**1.8, 1.8 i** 07/05 - 03/10 92 -103 kW	**46-182166**		disconect ITS+; Conditions see certificates VA: lowering (expertise): 45-50 mm; axle load to: 960 kg HA: without ride height adjustment; lowering (expertise): 30 mm; axle load to: 860 kg
B14	**1.8, 1.8 i, 1.9 CDTI, 2.0 Turbo, 2.2 i** 07/05 - 03/08 88 -147 kW	**47-121133**		disconect ITS+; Conditions see certificates VA: lowering (expertise): 30-50 mm; axle load to: 1060 kg HA: lowering (expertise): 30-50 mm; axle load to: 860 kg
HOLDEN ASTRA Estate (AH)				
B3	**1.8 i** 07/05 - 03/10 92 -103 kW	**37-163563**	**38-162374**	with standard chassis

HOLDEN				
HOLDEN ASTRA Estate (AH)				
B3	**1.8 i** 07/05 - 03/10 92 -103 kW	**37-163549**	**38-162350**	with standard chassis; Heavy Duty Version .
B3	**1.8 i** 07/05 - 03/10 92 -103 kW		**38-162367**	with standard chassis; with ride height adjustment
B3	**1.9 CDTI** 08/08 - 03/10 88 kW	**37-163556**	**38-162374**	with standard chassis
B3	**1.9 CDTI** 08/08 - 03/10 88 kW		**38-162350**	with standard chassis; Heavy Duty Version .
B3	**1.9 CDTI** 08/08 - 03/10 88 kW		**38-162367**	with standard chassis; with ride height adjustment
B4	**1.8 i, 1.9 CDTI** 07/05 - 03/10 88 -103 kW	**22-141590** **22-141606** **i.V.** SP	**19-141626** OIO	without electronic suspension control; without IDS+ suspension
B6 Sport	**1.8 i, 1.9 CDTI** 07/05 - 03/10 88 -103 kW	**35-114635** **35-114642**	**24-118576** OIO	without IDS+ suspension
B8	**1.8 i, 1.9 CDTI** 07/05 - 03/10 88 -103 kW	**35-114666** **35-114673**	**24-118576** OIO	without IDS+ suspension
B12 PK	**1.8 i** 07/05 - 03/10 92 -103 kW	**46-182142**		disconect ITS+; Conditions see certificates VA: lowering (expertise): 30-35 mm; axle load to: 970 kg HA: without ride height adjustment; lowering (expertise): 25-30 mm; axle load to: 940 kg
B12 PK	**1.9 CDTI** 08/08 - 03/10 88 kW	**46-182159**		disconect ITS+; Conditions see certificates VA: lowering (expertise): 30-35 mm; axle load to: 1075 kg HA: without ride height adjustment; lowering (expertise): 25-30 mm; axle load to: 940 kg
B12 SL	**1.8 i** 07/05 - 03/10 92 -103 kW	**46-182180**		disconect ITS+; Conditions see certificates VA: lowering (expertise): 40-45 mm; axle load to: 960 kg HA: without ride height adjustment; lowering (expertise): 35 mm; axle load to: 940 kg
HOLDEN ASTRA Twintop (TS)				
B3	**1.8, 1.8 i** 07/05 - 03/10 92 -103 kW	**37-163563**	**38-163531**	with standard chassis
B3	**1.8, 1.8 i** 07/05 - 03/10 92 -103 kW	**37-163549**	**38-163524**	with standard chassis; Heavy Duty Version .
B3	**2.0 i Turbo, 2.2, 2.2 i** 06/06 - 03/10 109 -147 kW	**37-163556**	**38-163531**	with standard chassis
B3	**2.0 i Turbo, 2.2, 2.2 i** 06/06 - 03/10 109 -147 kW		**38-163524**	with standard chassis; Heavy Duty Version .
B4	**1.8, 1.8 i, 2.0 i Turbo, 2.2, 2.2 i** 07/05 - 03/10 92 -147 kW	**22-141590** **22-141606** **i.V.** SP	**19-141626** OIO	without electronic suspension control; without IDS+ suspension
B6 Sport	**1.8, 1.8 i, 2.0 i Turbo, 2.2, 2.2 i** 07/05 - 03/10 92 -147 kW	**35-114666** **35-114673**	**24-118576** OIO	without IDS+ suspension
B12 PK	**1.8, 1.8 i** 07/05 - 03/10 92 -103 kW	**46-182128**		disconect ITS+; Conditions see certificates VA: lowering (expertise): 30 mm; axle load to: 970 kg HA: lowering (expertise): 30 mm; axle load to: 860 kg
B12 PK	**2.0 i Turbo, 2.2, 2.2 i** 06/06 - 03/10 109 -147 kW	**46-182135**		disconect ITS+; Conditions see certificates VA: lowering (expertise): 30 mm; axle load to: 1075 kg HA: lowering (expertise): 30 mm; axle load to: 860 kg
B12 SL	**1.8, 1.8 i** 07/05 - 03/10 92 -103 kW	**46-182166**		disconect ITS+; Conditions see certificates VA: lowering (expertise): 45-50 mm; axle load to: 960 kg HA: lowering (expertise): 30 mm; axle load to: 860 kg
B12 SL	**2.0 i Turbo, 2.2, 2.2 i** 06/06 - 03/10 109 -147 kW	**46-182173**		disconect ITS+; Conditions see certificates VA: lowering (expertise): 45-50 mm; axle load to: 1025 kg HA: lowering (expertise): 30 mm; axle load to: 860 kg

H

HOLDEN

HOLDEN ASTRA Twintop (TS)

B14	**1.8, 1.8 i, 2.0 i Turbo, 2.2, 2.2 i** 07/05 - 03/10 92 -147 kW	**47-121133**		disconect ITS+; Conditions see certificates VA: lowering (expertise): 30-50 mm; axle load to: 1060 kg HA: lowering (expertise): 30-50 mm; axle load to: 860 kg

HOLDEN ASTRA TWINTOP (AH)

B3	**1.9 TDCi** 03/08 - 03/10 110 kW	**37-163556**	**38-162350**	with standard chassis
B4	**1.9 TDCi** 03/08 - 03/10 110 kW	**22-053060** **22-053077** **11-101512** SP	**19-068756**	
B6 Sport	**1.9 TDCi** 03/08 - 03/10 110 kW	**35-044338**	**24-027823**	
B8	**1.9 TDCi** 03/08 - 03/10 110 kW	**35-044345**	**24-027830**	
B12 PK	**1.9 TDCi** 03/08 - 03/10 110 kW	**46-188908**		Conditions see certificates VA: lowering (expertise): 30 mm; axle load to: 1015 kg HA: lowering (expertise): 30 mm; axle load to: 845 kg

HOLDEN BARINA Hatchback (SB)

B1	**1.2 i, 1.4 i, 1.6 i, 1.6 Sport, 1.7 Eco** 04/94 - 08/00 33 -78 kW	**12-224197**		VA: with ball bearing
B3	**1.2 i, 1.4 i, 1.6 i, 1.6 Sport, 1.7 Eco** 04/94 - 08/00 33 -78 kW	**36-161447**	**38-120008**	with standard chassis
B3	**1.2 i, 1.4 i, 1.6 i, 1.6 Sport, 1.7 Eco** 04/94 - 08/00 33 -78 kW		**38-130403**	with standard chassis; Heavy Duty Version .
B4	**1.2 i, 1.4 i, 1.6 i, 1.6 Sport, 1.7 Eco** 04/94 - 08/00 33 -78 kW	**22-040909** **11-101314** SP	**19-019727**	
B4	**1.2 i, 1.4 i, 1.6 i, 1.6 Sport, 1.7 Eco** 04/94 - 08/00 33 -78 kW	**22-040909** **11-101314** SP	**19-126395**	with standard chassis
B4	**1.2 i, 1.4 i, 1.6 i, 1.6 Sport, 1.7 Eco** 04/94 - 08/00 33 -78 kW	**22-040909** **11-101314** SP	**19-019727**	with sports suspension
B6 Sport	**1.2 i, 1.4 i, 1.6 i, 1.6 Sport, 1.7 Eco** 04/94 - 08/00 33 -78 kW	**35-040590**	**24-000857**	
B8	**1.2 i, 1.4 i, 1.6 i, 1.6 Sport, 1.7 Eco** 04/94 - 08/00 33 -78 kW	**35-040590**	**24-000857**	
B10	**1.2 i, 1.4 i, 1.6 i, 1.6 Sport, 1.7 Eco** 04/94 - 08/00 33 -78 kW	**46-111951**		Conditions see certificates VA: lowering (expertise): 60 mm HA: lowering (expertise): 40 mm
B12 PK	**1.2 i, 1.4 i, 1.6 i, 1.6 Sport** 04/94 - 08/00 33 -78 kW	**46-189011**		Conditions see certificates VA: lowering (expertise): 30 mm; axle load to: 790 kg HA: lowering (expertise): 30 mm; axle load to: 700 kg
B12 SL	**1.2 i, 1.4 i, 1.6 i, 1.6 Sport** 04/94 - 08/00 33 -78 kW	**46-189004**		Conditions see certificates VA: lowering (expertise): 45-50 mm; axle load to: 790 kg HA: lowering (expertise): 25 mm; axle load to: 700 kg
B14	**1.2 i, 1.4 i, 1.6 i, 1.6 Sport, 1.7 Eco** 04/94 - 08/00 33 -78 kW	**47-080713**		Spacers required for several wheel/tyre combinations; Conditions see certificates VA: lowering (expertise): 30-50 mm; axle load to: 820 kg HA: lowering (expertise): 20-40 mm; axle load to: 700 kg
B16 PSS9	**1.2 i, 1.4 i, 1.6 i, 1.6 Sport, 1.7 Eco** 04/94 - 08/00 33 -78 kW	**48-080767**		Spacers required for several wheel/tyre combinations; Conditions see certificates VA: lowering (expertise): 30-50 mm; axle load to: 820 kg HA: lowering (expertise): 20-40 mm; axle load to: 700 kg
MS	**1.2 i, 1.4 i, 1.6 i, 1.6 Sport, 1.7 Eco** 04/94 - 08/00 33 -78 kW	*35-041757*	**24-023917**	mark: Rallye VA: charakteristic: 230/80 HA: charakteristic: 200/80

HOLDEN

HOLDEN BARINA Hatchback (SB)

MS	**1.2 i, 1.4 i, 1.6 i, 1.6 Sport, 1.7 Eco** 04/94 - 08/00 33 -78 kW	**35-042136**	**24-023900**	mark: Renen Gruppe N+G VA: charakteristic: 230/80; rebound: 20 mm HA: charakteristic: 200/80; rebound: 20 mm

HOLDEN BARINA Saloon (SB)

B1	**1.6 GLX** 10/93 - 04/97 68 kW	**12-224197**		VA: with ball bearing
B3	**1.6 GLX** 10/93 - 04/97 68 kW	**36-161447**	**38-120008**	with standard chassis
B3	**1.6 GLX** 10/93 - 04/97 68 kW		**38-130403**	with standard chassis; Heavy Duty Version .
B4	**1.6 GLX** 10/93 - 04/97 68 kW	**22-040909** **11-101314** *SP*	**19-019727**	
B4	**1.6 GLX** 10/93 - 04/97 68 kW	**22-040909** **11-101314** *SP*	**19-126395**	with standard chassis
B4	**1.6 GLX** 10/93 - 04/97 68 kW	**22-040909** **11-101314** *SP*	**19-019727**	with sports suspension
B6 Sport	**1.6 GLX** 10/93 - 04/97 68 kW	**35-040590**	**24-000857**	
B8	**1.6 GLX** 10/93 - 04/97 68 kW	**35-040590**	**24-000857**	
B10	**1.6 GLX** 10/93 - 04/97 68 kW	**46-111951**		Conditions see certificates VA: lowering (expertise): 60 mm HA: lowering (expertise): 40 mm
B12 PK	**1.6 GLX** 10/93 - 04/97 68 kW	**46-189011**		Conditions see certificates VA: lowering (expertise): 30 mm; axle load to: 790 kg HA: lowering (expertise): 30 mm; axle load to: 700 kg
B12 SL	**1.6 GLX** 10/93 - 04/97 68 kW	**46-189004**		Conditions see certificates VA: lowering (expertise): 45-50 mm; axle load to: 790 kg HA: lowering (expertise): 25 mm; axle load to: 700 kg
B14	**1.6 GLX** 10/93 - 04/97 68 kW	**47-080713**		Spacers required for several wheel/tyre combinations; Conditions see certificates VA: lowering (expertise): 30-50 mm; axle load to: 820 kg HA: lowering (expertise): 20-40 mm; axle load to: 700 kg
B16 PSS9	**1.6 GLX** 10/93 - 04/97 68 kW	**48-080767**		Spacers required for several wheel/tyre combinations; Conditions see certificates VA: lowering (expertise): 30-50 mm; axle load to: 820 kg HA: lowering (expertise): 20-40 mm; axle load to: 700 kg
MS	**1.6 GLX** 10/93 - 04/97 68 kW	*35-041757*	**24-023917**	mark: Rallye VA: charakteristic: 230/80 HA: charakteristic: 200/80
MS	**1.6 GLX** 10/93 - 04/97 68 kW	**35-042136**	**24-023900**	mark: Renen Gruppe N+G VA: charakteristic: 230/80; rebound: 20 mm HA: charakteristic: 200/80; rebound: 20 mm

HOLDEN BARINA Hatchback (XC)

B1	**1.4, 1.4 i, 1.7 D, 1.8 SRi** 09/00 - 02/05 55 -92 kW	**12-117390**		VA: Soft Version; without ball bearing
B4	**1.4, 1.4 i, 1.7 D, 1.8 SRi** 09/00 - 02/05 55 -92 kW	**22-110442** **22-110459**	**19-108988**	with standard chassis HA: drum Brake; thread: M10
B4	**1.4, 1.4 i, 1.7 D, 1.8 SRi** 09/00 - 02/05 55 -92 kW	**22-118714** **22-118721**	**19-108995**	with sports suspension HA: disc Brake; thread: M14
B4	**1.4, 1.4 i, 1.7 D, 1.8 SRi** 09/00 - 02/05 55 -92 kW	**22-110442** **22-110459**	**19-108995**	with off-road suspension HA: disc Brake; thread: M14

H

HOLDEN

HOLDEN BARINA Hatchback (XC)

B6 Sport	**1.4, 1.4 i, 1.7 D, 1.8 SRi** 09/00 - 02/05 55 -92 kW	**35-141068** **35-141075**	**24-141086**	with standard chassis HA: drum Brake; thread: M10
B6 Sport	**1.4, 1.4 i, 1.7 D, 1.8 SRi** 09/00 - 02/05 55 -92 kW	**35-141068** **35-141075**	**24-142342**	with sports suspension HA: disc Brake; thread: M14
B8	**1.4, 1.4 i, 1.7 D, 1.8 SRi** 09/00 - 02/05 55 -92 kW	**35-141099** **35-141105**	**24-141116**	with standard chassis HA: drum Brake; thread: M10
B8	**1.4, 1.4 i, 1.7 D, 1.8 SRi** 09/00 - 02/05 55 -92 kW	**35-141099** **35-141105**	**24-142342**	with sports suspension HA: disc Brake; thread: M14
B12 PK	**1.4, 1.4 i, 1.7 D, 1.8 SRi** 09/00 - 02/05 55 -92 kW	**46-189059**		Conditions see certificates; thread: M10 VA: lowering (expertise): 30 mm; axle load to: 940 kg HA: drum Brake; lowering (expertise): 30 mm; axle load to: 760 kg
B12 PK	**1.4, 1.4 i, 1.7 D, 1.8 SRi** 09/00 - 02/05 55 -92 kW	**46-189035**		Conditions see certificates; thread: M14 VA: lowering (expertise): 30 mm; axle load to: 940 kg HA: disc Brake; lowering (expertise): 30 mm; axle load to: 760 kg
B14	**1.4, 1.4 i, 1.7 D, 1.8 SRi** 09/00 - 02/05 55 -92 kW	**47-167254**		Conditions see certificates VA: lowering (expertise): 30-50 mm; axle load to: 900 kg HA: lowering (expertise): 20-40 mm; axle load to: 760 kg

HOLDEN CALIBRA (YE)

B3	**2.0 i, 2.0 i 16V, 2.5 i V6** 10/91 - 11/97 85 -125 kW	**36-133932**	**38-225819** *38-130458*	with standard chassis
B3	**2.0 i Turbo 4x4** 03/92 - 11/97 150 kW	**36-162642**		with standard chassis; all-wheel drive
B4	**2.0 i, 2.0 i 16V, 2.5 i V6** 10/91 - 11/97 85 -125 kW	**21-030529** **11-101314** *SP*	**19-019758**	
B4	**2.0 i Turbo 4x4** 03/92 - 11/97 150 kW	**21-030529** **11-101314** *SP*	**19-019758**	
B6 Sport	**2.0 i, 2.0 i 16V, 2.5 i V6** 10/91 - 11/97 85 -125 kW	**34-003725**	**24-016100**	
B6 Sport	**2.0 i Turbo 4x4** 03/92 - 11/97 150 kW	**34-003725**	**24-016100**	
B8	**2.0 i, 2.0 i 16V, 2.5 i V6** 10/91 - 11/97 85 -125 kW	**34-181584**	**24-016100**	
B8	**2.0 i Turbo 4x4** 03/92 - 11/97 150 kW	**34-181584**	**24-016100**	
B12 PK	**2.0 i Turbo 4x4** 03/92 - 11/97 150 kW	**46-192851**		Conditions see certificates VA: lowering (expertise): 30 mm; axle load to: 885 kg HA: lowering (expertise): 30 mm; axle load to: 880 kg

HOLDEN CRUZE Saloon (JG)

B4	**1.4 i Turbo, 1.8, 2.0 Diesel, 2.0 DTFi** 06/09 - 103 -120 kW	**22-183644** **22-183651**	**19-183633**	with standard chassis
B6 Sport	**1.4 i Turbo, 1.8, 2.0 Diesel, 2.0 DTFi** 06/09 - 103 -120 kW	**35-171669** **35-171676**	**24-171687**	with standard chassis
B8	**1.4 i Turbo, 1.8, 2.0 Diesel, 2.0 DTFi** 06/09 - 103 -120 kW	**35-171690** **35-171706**	**24-171717**	without IDS+ suspension; with sports suspension
B14	**1.4 i Turbo, 1.8, 2.0 Diesel, 2.0 DTFi** 06/09 - 103 -120 kW	**47-171725**		Conditions see certificates VA: lowering (expertise): 30-50 mm; axle load to: 1220 kg HA: lowering (expertise): 20-40 mm; axle load to: 1020 kg

HOLDEN				
HOLDEN CRUZE Hatchback (JG, JH)				
B4	**1.4 i Turbo, 1.8 i, 2.0 DTFi** 11/11 - 103 -120 kW	**22-183644** ↰ **22-183651** ↱	**19-183633**	with standard chassis
B6 Sport	**1.4 i Turbo, 1.8 i, 2.0 DTFi** 11/11 - 103 -120 kW	**35-171669** ↰ **35-171676** ↱	**24-171687** OE	with standard chassis
B8	**1.4 i Turbo, 1.8 i, 2.0 DTFi** 11/11 - 103 -120 kW	**35-171690** ↰ **35-171706** ↱	**24-171717** OE	without IDS+ suspension; with sports suspension
B14	**1.4 i Turbo, 1.8 i, 2.0 DTFi** 11/11 - 103 -120 kW	**47-171725**		Conditions see certificates VA: lowering (expertise): 30-50 mm; axle load to: 1220 kg HA: lowering (expertise): 20-40 mm; axle load to: 1020 kg
HOLDEN ZAFIRA (TT)				
B1	**2.2** 06/01 - 02/06 108 kW	**12-117376**		VA: Hard Version; without ball bearing
B3	**2.2** 06/01 - 02/06 108 kW	**36-130214**	**36-774210**	with standard chassis
B3	**2.2** 06/01 - 02/06 108 kW	**36-197880**	**36-774210**	with standard chassis; Heavy Duty Version .
B4	**2.2** 06/01 - 02/06 108 kW	**22-106605** ↰ **22-106612** ↱	**19-106625** OE	
B6 Sport	**2.2** 06/01 - 02/06 108 kW	**35-045984**	**24-029896** OE	
B8	**2.2** 06/01 - 02/06 108 kW	**35-045991**	**24-029902** OE	
B12 PK	**2.2** 06/01 - 02/06 108 kW	**46-194220**		Conditions see certificates VA: lowering (expertise): 30 mm; axle load to: 1075 kg HA: lowering (expertise): 30 mm; axle load to: 1130 kg
HONDA				
HONDA ACCORD II (AC, AD)				
B3	**1.6 EX, 1.8 EX** 09/83 - 10/85 65 -74 kW		*36-202584*	with standard chassis
HONDA ACCORD III (CA4, CA5)				
B4	**1.6 L, 2.0 EX, 2.0 EXi, 2.0 i 16V** 11/85 - 12/89 65 -101 kW	*19-062730* ↰ *19-062747* ↱	*19-063171* HC	
B6 Sport	**1.6 L, 2.0 EX, 2.0 EXi, 2.0 i 16V** 11/85 - 12/89 65 -101 kW	*24-011358* ↰ *24-011365* ↱	*24-010894* HC	
HONDA ACCORD III Aerodeck (CA5)				
B4	**1.6 L, 2.0, 2.0 EX, 2.0 EXi** 11/85 - 12/89 65 -101 kW	*19-062730* ↰ *19-062747* ↱	*19-063171* HC	
B6 Sport	**1.6 L, 2.0, 2.0 EX, 2.0 EXi** 11/85 - 12/89 65 -101 kW	*24-011358* ↰ *24-011365* ↱	*24-010894* HC	
HONDA ACCORD IV (CB3, CB7)				
B4	**1.8, 2.0 16V, 2.0 i 16V, 2.2 i 16V, 2.2 i 16V Automatik** 01/90 - 03/93 66 -110 kW	*19-062853* ↰ *19-062860* ↱	**19-028811** HC	with standard chassis

H

HONDA				
HONDA ACCORD IV (CB3, CB7)				
B6 Sport	**1.8, 2.0 16V, 2.0 i 16V, 2.2 i 16V, 2.2 i 16V Automatik** 01/90 - 03/93 66 -110 kW	**24-017213** ↓ ↰ **24-017220** ↓ ↱	**24-017237** ↓	
B8	**1.8, 2.0 16V, 2.0 i 16V, 2.2 i 16V, 2.2 i 16V Automatik** 01/90 - 03/93 66 -110 kW	**24-016087** ↓ ↰ **24-016094** ↓ ↱	**24-016063** ↓	
HONDA ACCORD IV Aerodeck (CB8, CB9)				
B4	**2.0 i 16V, 2.2 i 16V** 01/91 - 12/93 98 -110 kW	*19-062853* ↓ ↰ *19-062860* ↓ ↱	*19-063249* ↓	
B6 Sport	**2.0 i 16V, 2.2 i 16V** 01/91 - 12/93 98 -110 kW	**24-017213** ↓ ↰ **24-017220** ↓ ↱	**24-017237** ↓	
B8	**2.0 i 16V, 2.2 i 16V** 01/91 - 12/93 98 -110 kW	**24-016087** ↓ ↰ **24-016094** ↓ ↱	**24-016063** ↓	
B14	**2.0 i 16V** 03/93 - 12/93 98 kW	*47-087392*		Conditions see certificates VA: lowering (expertise): 25-50 mm HA: lowering (expertise): 25-50 mm
HONDA ACCORD IV Coupe (CC1)				
B4	**2.0 i 16V** 01/92 - 09/93 98 kW	*19-062853* ↓ ↰ *19-062860* ↓ ↱	**19-028811** ↓	
B6 Sport	**2.0 i 16V** 01/92 - 09/93 98 kW	**24-017213** ↓ ↰ **24-017220** ↓ ↱	**24-017237** ↓	
B8	**2.0 i 16V** 01/92 - 09/93 98 kW	**24-016087** ↓ ↰ **24-016094** ↓ ↱	**24-016063** ↓	
HONDA ACCORD V (CC7, CD)				
B3	**2.0 i, 2.0 i S** 03/93 - 01/96 85 -96 kW	**36-217243**	**36-217250**	with standard chassis
B3	**2.0 i, 2.0 i S** 03/93 - 01/96 85 -96 kW	**36-217281**		with standard chassis; Heavy Duty Version .
B3	**2.3 i SR** 03/93 - 01/96 116 kW	**36-217281**	**36-217250**	with standard chassis
B4	**2.0 i, 2.0 i S, 2.3 i SR** 03/93 - 01/96 85 -116 kW	*19-062853* ↓ ↰ *19-062860* ↓ ↱	**19-028811** ↓	
B6 Sport	**2.0 i, 2.0 i S, 2.3 i SR** 03/93 - 01/96 85 -116 kW	**24-017213** ↓ ↰ **24-017220** ↓ ↱	**24-017237** ↓	
B8	**2.0 i, 2.0 i S, 2.3 i SR** 03/93 - 01/96 85 -116 kW	**24-016087** ↓ ↰ **24-016094** ↓ ↱	**24-016063** ↓	
B14	**2.0 i, 2.0 i S, 2.3 i SR** 03/93 - 01/96 85 -116 kW	*47-087392*		Conditions see certificates VA: lowering (expertise): 20-50 mm HA: lowering (expertise): 20-50 mm
HONDA ACCORD V Aerodeck (CE)				
B4	**2.0 i LS 16V, 2.2 i ES** 09/93 - 02/98 100 -110 kW		*19-063249* ↓	
B6 Sport	**2.0 i LS 16V, 2.2 i ES** 09/93 - 02/98 100 -110 kW	**24-023719** ↓	**24-021142** ↓	
B14	**2.0 i LS 16V, 2.2 i ES** 09/93 - 02/98 100 -110 kW	*47-087392*		Conditions see certificates VA: lowering (expertise): 20-50 mm HA: lowering (expertise): 20-50 mm

HONDA

HONDA ACCORD V Aerodeck (CE)

HONDA ACCORD V Coupe (CD7, CD9)

B3	**2.0** 09/93 - 12/97 100 kW	36-217342	36-217298	with standard chassis; manual transmission
B3	**2.0** 09/93 - 12/97 100 kW	36-217359	36-217298	with standard chassis; automatic transmission
B3	**2.2 i ES** 09/93 - 02/98 110 kW	36-217359	36-217298	with standard chassis; manual transmission
B3	**2.2 i ES** 09/93 - 02/98 110 kW		36-217298	with standard chassis; automatic transmission
B4	**2.0, 2.2 i ES** 09/93 - 02/98 100 -110 kW		*19-063249*	
B6 Sport	**2.0, 2.2 i ES** 09/93 - 02/98 100 -110 kW	**24-017213** **24-017220**	**24-017237**	
B8	**2.0, 2.2 i ES** 09/93 - 02/98 100 -110 kW	**24-016087** **24-016094**	**24-016063**	
B14	**2.0** 09/93 - 12/97 100 kW	*47-087392*		Conditions see certificates VA: lowering (expertise): 50 mm HA: lowering (expertise): 50 mm

HONDA ACCORD VI (CE, CF)

B3	**1.9 i, 2.0 i LS** 02/96 - 10/98 85 -96 kW	36-217243	36-217250	with standard chassis; manual transmission
B3	**1.9 i, 2.0 i LS** 02/96 - 10/98 85 -96 kW	36-217281	36-217250	with standard chassis; automatic transmission
B3	**2.2 i VTEC** 02/96 - 10/98 110 kW	36-217281	36-217250	with standard chassis; manual transmission
B3	**2.2 i VTEC** 02/96 - 10/98 110 kW		36-217250	with standard chassis; automatic transmission
B3	**2.0 TDi** 04/96 - 10/98 77 kW	36-217267	36-217250	with standard chassis
B4	**1.9 i, 2.0 i LS, 2.0 TDi, 2.2 i VTEC** 02/96 - 10/98 77 -110 kW	*19-062853* *19-062860*	**19-028811**	
B6 Sport	**1.9 i, 2.0 i LS, 2.0 TDi, 2.2 i VTEC** 02/96 - 10/98 77 -110 kW	**24-017213** **24-017220**	**24-017237**	
B8	**1.9 i, 2.0 i LS, 2.0 TDi, 2.2 i VTEC** 02/96 - 10/98 77 -110 kW	**24-016087** **24-016094**	**24-016063**	
B14	**1.9 i, 2.0 i LS, 2.0 TDi, 2.2 i VTEC** 02/96 - 10/98 77 -110 kW	*47-087392*		Conditions see certificates VA: lowering (expertise): 20-50 mm HA: lowering (expertise): 20-50 mm

HONDA ACCORD VII (CG, CK)

B3	**1.6 i, 1.6 LS** 10/98 - 12/02 79 -85 kW		**36-199969**	with standard chassis
B3	**1.8 i, 2.0 i** 10/98 - 12/02 100 -108 kW	**36-213467**	**36-199969**	with standard chassis
B3	**1.8 i, 2.0 i** 10/98 - 12/02 100 -108 kW	**36-213474**		with standard chassis; Heavy Duty Version .

HONDA				
HONDA ACCORD VII (CG, CK)				
B3	**2.0 Turbo DI** 02/99 - 12/02 77 kW	**36-213474**	**36-199969**	with standard chassis
B3	**2.3** 03/97 - 06/03 110 -113 kW	**36-213467**	**36-199969**	with standard chassis; manual transmission
B3	**2.3** 03/97 - 06/03 110 -113 kW	**36-213474**		with standard chassis; Heavy Duty Version .; manual transmission
B3	**2.3** 03/97 - 06/03 110 -113 kW	**36-213474**	**36-199969**	with standard chassis; automatic transmission
B4	**1.6 i, 1.8 i, 2.0 i, 2.0 Turbo DI, 2.3** 10/98 - 06/03 77 -113 kW	**19-142913**	**19-142142**	
B6 Sport	**1.6 i, 1.6 LS, 1.8 i, 2.0 i, 2.0 Turbo DI, 2.2 Type-R, 2.3** 10/98 - 06/03 77 -156 kW	**24-060288**	**24-060295**	Vehicle Production Country: Great Britain
B8	**1.6 i, 1.6 LS, 1.8 i, 2.0 i, 2.0 Turbo DI, 2.2 Type-R, 2.3** 10/98 - 06/03 77 -156 kW	**24-060301**	**24-060318**	Vehicle Production Country: Great Britain
B12 PK	**1.6 i, 1.6 LS, 1.8 i, 2.0 i, 2.0 Turbo DI, 2.2 Type-R** 10/98 - 12/02 77 -156 kW	**46-190130**		Conditions see certificates; Vehicle Production Country: Great Britain VA: lowering (expertise): 30-35 mm; axle load to: 1040 kg HA: lowering (expertise): 30 mm; axle load to: 940 kg
B16 PSS9	**1.6 i, 1.6 LS, 1.8 i, 2.0 i, 2.0 Turbo DI, 2.2 Type-R, 2.3, 3.0 Vtec** 10/98 - 06/03 77 -156 kW	*48-088428*		Conditions see certificates; Vehicle Production Country: Great Britain VA: lowering (expertise): 35-55 mm; axle load to: 1040 kg HA: lowering (expertise): 40-50 mm; axle load to: 940 kg
HONDA ACCORD VII Hatchback (CH)				
B3	**1.8 i, 2.0** 12/99 - 12/02 100 -108 kW	**36-213474**	**36-213450**	with standard chassis
B3	**1.8 i, 2.0** 12/99 - 12/02 100 -108 kW	**36-213474**		with standard chassis; Heavy Duty Version .
B3	**2.3** 11/00 - 12/02 113 kW	**36-213467**	**36-213450**	with standard chassis; manual transmission
B3	**2.3** 11/00 - 12/02 113 kW	**36-213474**	**36-213450**	with standard chassis; Heavy Duty Version .; manual transmission
B3	**2.3** 11/00 - 12/02 113 kW	**36-213474**	**36-213450**	with standard chassis; automatic transmission
B3	**2.0 TDi** 12/99 - 10/00 77 kW	**36-213474**	**36-213450**	with standard chassis
B4	**1.8 i, 2.0, 2.0 TDi, 2.3** 12/99 - 12/02 77 -113 kW	**19-142913**	**19-142142**	Vehicle Production Country: Great Britain
B6 Sport	**1.8 i, 2.0, 2.0 TDi, 2.3** 12/99 - 12/02 77 -113 kW	**24-060288**	**24-060295**	Vehicle Production Country: Great Britain
B8	**1.8 i, 2.0, 2.0 TDi, 2.3** 12/99 - 12/02 77 -113 kW	**24-060301**	**24-060318**	Vehicle Production Country: Great Britain
B12 PK	**1.6, 1.8 i, 2.0, 2.0 TDi, 2.3** 12/99 - 12/02 77 -113 kW	**46-190130**		Conditions see certificates; Vehicle Production Country: Great Britain VA: lowering (expertise): 30-35 mm; axle load to: 1040 kg HA: lowering (expertise): 30 mm; axle load to: 940 kg
B16 PSS9	**1.8 i, 2.0, 2.0 TDi, 2.3** 12/99 - 12/02 77 -113 kW	*48-088428*		Conditions see certificates; Vehicle Production Country: Great Britain VA: lowering (expertise): 35-55 mm; axle load to: 1040 kg HA: lowering (expertise): 40-50 mm; axle load to: 940 kg

HONDA				
HONDA ACCORD VII Coupe (CG)				
B3	**2.0 i 16V** 02/98 - 06/03 108 kW	36-217304	36-217311	with standard chassis; manual transmission
B3	**2.0 i 16V** 02/98 - 06/03 108 kW		36-217311	with standard chassis; automatic transmission
B4	**2.0 i 16V** 02/98 - 06/03 108 kW	**19-166766**	**19-165646**	with standard chassis; Vehicle Production Country: Great Britain
B6 Sport	**2.0 i 16V, 2.3 VTi** 02/98 - 06/03 108 -113 kW	**24-060288**	**24-060295**	Vehicle Production Country: Great Britain
B8	**2.0 i 16V, 2.3 VTi** 02/98 - 06/03 108 -113 kW	**24-060301**	**24-060318**	Vehicle Production Country: Great Britain
B12 PK	**2.0 i 16V** 02/98 - 06/03 108 kW	**46-190147**		Conditions see certificates; Vehicle Production Country: Great Britain VA: lowering (expertise): 30-35 mm; axle load to: 1040 kg HA: lowering (expertise): 30 mm; axle load to: 940 kg
B16 PSS9	**3.0 V6 24V, 3.0 Vtec** 02/98 - 06/03 147 -152 kW	*48-088428*		Conditions see certificates VA: lowering (expertise): 35-55 mm; axle load to: 1040 kg HA: lowering (expertise): 40-50 mm; axle load to: 940 kg
HONDA ACCORD VII Aerodeck (CM_)				
B4	**1.6, 2.3 16 V, 2.4 Vtec E** 02/98 - 09/05 65 -118 kW	**19-142913**	**19-142142**	Vehicle Production Country: Great Britain
B6 Sport	**1.6, 2.3 16 V, 2.4 Vtec E** 02/98 - 09/05 65 -118 kW	**24-060288**	**24-060295**	Vehicle Production Country: Great Britain
B8	**1.6, 2.3 16 V, 2.4 Vtec E** 02/98 - 09/05 65 -118 kW	**24-060301**	**24-060318**	Vehicle Production Country: Great Britain
HONDA ACCORD VIII (CL_, CM_)				
B3	**2.0** 02/03 - 114 kW	**36-214860**	**36-215188**	with standard chassis; mark: Comfort/Sport
B3	**2.4, 2.4 i 16V** 02/03 - 115 -140 kW	**36-214860**	**36-215188**	with standard chassis; mark: Type S
B3	**2.4, 2.4 i 16V** 02/03 - 115 -140 kW	**36-214860**	36-217335	with standard chassis; mark: Executive
B3	**2.2 i-CTDi** 01/04 - 103 kW	36-217328	**36-215188**	with standard chassis
B4	**2.0, 2.0 All-wheel Drive, 2.2 i-CTDi, 2.4, 2.4 i 16V, 2.4 Vtec, 2.4 Vtec E, 3.0** 02/03 - 103 -182 kW	**19-146782**	**19-146799**	VA: without xenon lights
B6 Sport	**2.0, 2.0 All-wheel Drive, 2.2 i-CTDi, 2.4, 2.4 i 16V, 2.4 Vtec, 2.4 Vtec E, 3.0** 02/03 - 103 -182 kW	**24-107303**	**24-107310**	without xenon lights
B8	**2.0, 2.0 All-wheel Drive, 2.2 i-CTDi, 2.4, 2.4 i 16V, 2.4 Vtec, 2.4 Vtec E, 3.0** 02/03 - 103 -182 kW	**24-107303**	**24-107938**	without xenon lights
B12 PK	**2.0** 02/03 - 114 kW	**46-190154**		without xenon lights; Conditions see certificates VA: lowering (expertise): 35-40 mm; axle load to: 1050 kg HA: lowering (expertise): 30 mm; axle load to: 920 kg
B12 PK	**2.2 i-CTDi, 2.4** 02/03 - 103 -140 kW	**46-190178**		without xenon lights; Conditions see certificates VA: lowering (expertise): 35-40 mm; axle load to: 1100 kg HA: lowering (expertise): 30 mm; axle load to: 920 kg

H

HONDA				
HONDA ACCORD VIII Tourer (CM_)				
B3	**2.0** 04/03 - 114 kW	36-214969	36-214952	with standard chassis; manual transmission
B3	**2.0** 04/03 - 114 kW	**36-214945**	36-214952	with standard chassis; automatic transmission
B3	**2.4** 04/03 - 140 kW	**36-214945**		with standard chassis; manual transmission
B3	**2.2 i-CTDi** 01/04 - 103 kW	36-214976	36-214983	with standard chassis; mark: Executive
B3	**2.2 i-CTDi** 01/04 - 103 kW	36-214976		with standard chassis; mark: Sport
B4	**2.0, 2.2 i-CTDi, 2.4** 04/03 - 103 -140 kW	**19-146782**	**19-165554**	VA: without xenon lights
B4	**2.4 Vtec E, 2.4 Vtec T** 09/03 - 118 -147 kW	**19-142913**	**19-142142**	Vehicle Production Country: Great Britain
B6 Sport	**2.0, 2.2 i-CTDi, 2.4** 04/03 - 103 -140 kW	**24-107303**	**24-107327**	without xenon lights
B6 Sport	**2.4 Vtec E, 2.4 Vtec T** 09/03 - 118 -147 kW	**24-060288**	**24-060295**	Vehicle Production Country: Great Britain
B8	**2.0, 2.2 i-CTDi, 2.4** 04/03 - 103 -140 kW	**24-107303**	**24-107945**	without xenon lights
B8	**2.4 Vtec E, 2.4 Vtec T** 09/03 - 118 -147 kW	**24-060301**	**24-060318**	Vehicle Production Country: Great Britain
HONDA CIVIC III Hatchback (AL, AJ, AG, AH)				
B4	**1.2, 1.3, 1.5 GL, 1.5 GT, 1.5 GTI** 10/83 - 10/87 40 -74 kW	*22-047281* *22-047298*	*19-063164*	
HONDA CIVIC III Saloon (AM, AK, AU)				
B4	**1.2, 1.3, 1.5 GL, 1.5 GT, 1.5 GTI** 10/83 - 10/87 40 -74 kW	*22-047281* *22-047298*	*19-063164*	
HONDA CIVIC IV Hatchback (EC, ED, EE)				
B4	**1.2, 1.3** 10/87 - 12/88 41 -55 kW		*19-063188*	
B4	**1.3** 01/89 - 12/89 55 kW	*19-062778* *19-062785*	*19-063195*	
B4	**1.3 16 V CAT** 09/89 - 09/91 55 kW	*19-062778* *19-062785*	*19-063195*	
B4	**1.4 L** 10/87 - 12/88 66 kW		*19-063188*	-> CH.Nr.: S100000
B4	**1.4 L** 01/89 - 12/89 66 kW	*19-062778* *19-062785*	*19-063195*	CH.Nr.: S100001 ->
B4	**1.5 i 16V, 1.6 i 16V** 09/87 - 12/88 66 -96 kW		*19-063188*	-> CH.Nr.: S100000
B4	**1.5 i 16V, 1.6 i 16V** 01/89 - 09/91 66 -96 kW	*19-062778* *19-062785*	*19-063195*	CH.Nr.: S100001 ->
B4	**1.5 i 16V** 01/89 - 09/91 69 kW	*19-062778* *19-062785*	*19-063195*	CH.Nr.: S100001 ->

HONDA

HONDA CIVIC IV Hatchback (EC, ED, EE)

B4	**1.6 i 16V Vtec** CH-Nr. - 09/91 110 kW	*19-062778* VL *19-062785* HL	*19-063195* HA	CH.Nr.: S100001 ->

HONDA CIVIC IV Saloon (ED)

B4	**1.2, 1.4 L** 01/89 - 12/91 41 -66 kW	*19-062778* VL *19-062785* HL	*19-063195* HA	CH.Nr.: S100001 ->
B4	**1.4 L** 10/87 - 12/88 66 kW		*19-063188* HO	-> CH.Nr.: S100000
B4	**1.5 i 16V, 1.6 i 16V** 01/89 - 10/93 69 -96 kW	*19-062778* VL *19-062785* HL	*19-063195* HA	
B4	**1.6 i 16V** 11/87 - 09/91 80 kW	*19-062778* VL *19-062785* HL	*19-063195* HA	
B4	**1.6, 1.6 i 16V** 09/87 - 12/88 81 -96 kW		*19-063188* HO	

HONDA CIVIC IV Hatchback (EG)

B3	**1.3 16V, 1.5 i 16V, 1.6 16V Vtec, 1.6 si 16V, 1.6 VTi 16V** 10/91 - 11/95 55 -118 kW	**36-163878**	**36-154814**	with standard chassis
B4	**1.3 16V, 1.5 i 16V, 1.6 16V Vtec, 1.6 si 16V, 1.6 VTi 16V** 10/91 - 11/95 55 -118 kW	*19-062839* VL *19-062846* HL	*19-063195* HA	
B6 Sport	**1.3 16V, 1.5 i 16V, 1.6 16V Vtec, 1.6 si 16V, 1.6 VTi 16V** 10/91 - 11/95 55 -118 kW	**24-017473** VL **24-017480** HL	**24-017497** HO	Only for Japan
B8	**1.3 16V, 1.5 i 16V, 1.6 16V Vtec, 1.6 si 16V, 1.6 VTi 16V** 10/91 - 11/95 55 -118 kW	**24-016032** VL **24-016049** HL	**24-016056** HA	

HONDA CIVIC V Saloon (EG, EH)

B4	**1.3, 1.5, 1.5 i 16V, 1.6 16V Vtec, 1.6 EX, 1.6 si 16V, 1.6 VTi** 10/91 - 11/95 55 -118 kW	*19-062839* VL *19-062846* HL	*19-063195* HA	
B8	**1.3, 1.5, 1.6 16V Vtec, 1.6 EX, 1.6 si 16V, 1.6 VTi** 10/91 - 11/95 55 -118 kW	**24-016032** VL **24-016049** HL	**24-016056** HA	
B8	**1.5 i 16V** 10/91 - 11/95 69 kW	**24-016032** VL **24-016049** HL	**24-016056** HA	
B12 PK	**1.3, 1.5, 1.5 i 16V, 1.6, 1.6 16V Vtec, 1.6 EX, 1.6 si 16V, 1.6 VTi** 10/91 - 11/95 55 -118 kW	**46-190208**		Conditions see certificates VA: lowering (expertise): 30 mm; axle load to: 835 kg HA: lowering (expertise): 30 mm; axle load to: 750 kg

HONDA CIVIC V Coupe (EJ)

B4	**1.5 i LSi** 01/94 - 11/95 74 kW	*19-062839* VL *19-062846* HL	*19-063195* HA	
B4	**1.6 i** 01/94 - 11/95 77 kW		*19-063270* HA	
B4	**1.6 i Vtec** 01/94 - 09/95 92 kW	*19-062839* VL *19-062846* HL	*19-063195* HA	
B4	**1.6 i Vtec** 10/95 - 11/95 118 kW		*19-063270* HA	

H

HONDA

HONDA CIVIC V Coupe (EJ)

B8	**1.5 i LSi, 1.6 i, 1.6 i Vtec** 01/94 - 03/96 74 -118 kW	**24-016032** **24-016049**	**24-016056**	

HONDA CIVIC VI Hatchback (EJ, EK)

B3	**1.4 i, 1.4 i S, 1.5 i, 1.6, 1.6 i** 11/95 - 02/01 55 -92 kW	**36-154807**	**36-163854**	with standard chassis
B3	**1.4 i** 11/95 - 02/01 55 kW	**36-163878**	**36-154814**	with standard chassis; Number of Doors: 5
B4	**1.4 i, 1.4 i S, 1.5 i, 1.6, 1.6 i** 11/95 - 02/01 55 -92 kW		*19-063270*	
B6 Sport	**1.4 i, 1.4 i S, 1.5 i, 1.6, 1.6 i, 1.6 VTi, 2.0 TDiC** 11/95 - 02/01 55 -118 kW	**24-023368**	**24-023375**	

HONDA CIVIC VI Fastback (MA)

B3	**1.4 i, 1.5 i Vtec-E, 1.6 i, 1.6 i Vtec** 09/94 - 01/97 55 -93 kW	**36-163878**	**36-154814**	with standard chassis
B3	**1.4 16V, 1.5 16V, 1.6 16V** 01/97 - 02/01 55 -85 kW	**36-154807**	**36-163854**	with standard chassis
B3	**1.6 VTi** 01/97 - 02/01 118 kW	**36-163878**	**36-154814**	with standard chassis
B3	**1.8 16V** 01/97 - 02/01 124 kW	**36-163861**	**36-154814**	with standard chassis
B4	**1.4 16V, 1.5 16V, 1.6 16V, 1.6 VTi, 1.8 16V, 2.0 i TD, 1.6, 2.0 TDiC** 01/97 - 02/01 55 -124 kW	*19-062945* *19-062952*	*19-063225*	
B6 Sport	**1.4 16V, 1.5 16V, 1.6 16V, 1.6 VTi, 1.8 16V, 2.0 i TD, 2.0 TDiC** 01/97 - 02/01 55 -124 kW	**24-023368**	**24-023375**	

HONDA CIVIC VI Saloon (EJ, EK)

B3	**1.4, 1.4 i, 1.5 i** 10/93 - 02/01 55 -84 kW	**36-154807**	**36-163854**	with standard chassis
B3	**1.4 i** 11/95 - 02/01 66 kW	**36-163878**	**36-154814**	with standard chassis; Number of Doors: 5
B3	**1.6 VTi** 11/95 - 02/01 118 kW	**36-163878**	**36-154814**	with standard chassis
B4	**1.2, 1.4, 1.4 i, 1.5 i, 1.6 i Vtec, 1.6 VTi, 1.7** 11/95 - 03/01 55 -118 kW		*19-063270*	
B6 Sport	**1.2, 1.4, 1.4 i, 1.5 i, 1.6 i Vtec, 1.6 VTi, 1.7** 11/95 - 03/01 55 -118 kW	**24-023368**	**24-023375**	

HONDA CIVIC VI Coupe (EJ, EM1)

B3	**1.6 i** 03/96 - 03/00 77 kW	**36-154807**	**36-163854**	with standard chassis
B8	**1.6 i Vtec** 03/96 - 03/00 92 kW	**24-016032** **24-016049**	**24-016056**	

HONDA				
HONDA CIVIC VI Aerodeck (MB, MC)				
B3	**1.4 16V, 1.5 16V, 1.6 16V** 04/98 - 02/01 55 -85 kW	**36-154807**	**36-163854**	with standard chassis
B4	**1.4 16V, 1.5 16V, 1.6 16V, 1.8 16V, 2.0 i D** 04/98 - 02/01 55 -124 kW	*19-062945* *19-062952*	*19-063225*	
HONDA CIVIC VII Hatchback (EU, EP, ES)				
B3	**1.4 i, 1.4 iS** 02/01 - 09/05 55 -66 kW	**36-215096**	**36-200252**	with standard chassis; equipment: LS/E/S/Sport; Number of Doors: 3; manual transmission
B3	**1.4 i, 1.4 iS** 02/01 - 09/05 55 -66 kW	**36-214884**	**36-200252**	with standard chassis; equipment: ES/SE; Number of Doors: 3; manual transmission
B3	**1.4 i, 1.4 iS** 02/01 - 09/05 55 -66 kW	**36-214884**	**36-200252**	with standard chassis; Number of Doors: 3; automatic transmission
B3	**1.4 i, 1.4 iS** 02/01 - 09/05 55 -66 kW	**36-215096**	**36-200405**	with standard chassis; equipment: LS/E/S/Sport; Number of Doors: 5; manual transmission
B3	**1.4 i, 1.4 iS** 02/01 - 09/05 55 -66 kW	**36-200191**	**36-200405**	with standard chassis; equipment: LS/E/S/Sport; Number of Doors: 5; automatic transmission
B3	**1.4 i, 1.4 iS** 02/01 - 09/05 55 -66 kW	**36-200191**	36-216475	with standard chassis; equipment: SE; Number of Doors: 5; automatic transmission
B3	**1.4 i, 1.4 iS** 02/01 - 09/05 55 -66 kW	**36-215096**	36-216475	with standard chassis; equipment: SE; Number of Doors: 5; manual transmission
B3	**1.6 i** 02/01 - 09/05 81 kW	**36-214884**	**36-200252**	with standard chassis; equipment: ES/SE/Executive; Number of Doors: 3; manual transmission
B3	**1.6 i** 02/01 - 09/05 81 kW	**36-215096**	**36-200252**	with standard chassis; equipment: S; Number of Doors: 3; For left-hand drive vehicles; manual transmission
B3	**1.6 i** 02/01 - 09/05 81 kW	**36-214884**	**36-200252**	with standard chassis; equipment: S; Number of Doors: 3; For right-hand drive vehicles; manual transmission
B3	**1.6 i** 02/01 - 09/05 81 kW	**36-214884**	**36-200252**	with standard chassis; Number of Doors: 3; automatic transmission
B3	**1.6 i** 02/01 - 09/05 81 kW	**36-215096**	**36-200405**	with standard chassis; equipment: LS/S; Number of Doors: 5; manual transmission
B3	**1.6 i** 02/01 - 09/05 81 kW	**36-215096**	**36-200405**	with standard chassis; equipment: SE/Executive; Number of Doors: 5; manual transmission
B3	**1.6 i** 02/01 - 09/05 81 kW	**36-200191**	36-216475	with standard chassis; equipment: ES; Number of Doors: 5; manual transmission
B3	**1.6 i** 02/01 - 09/05 81 kW	**36-200191**	**36-200405**	with standard chassis; equipment: LS; Number of Doors: 5; automatic transmission
B3	**1.6 i** 02/01 - 09/05 81 kW	**36-200191**	36-216475	with standard chassis; equipment: ES/S/SE/Executive; Number of Doors: 5; automatic transmission
B3	**2.0 i Sport, 2.0 Type-R** 09/01 - 09/05 118 -147 kW	36-216468	**36-200252**	with standard chassis
B4	**1.4 i, 1.4 iS, 1.6 i, 1.7** 01/00 - 09/05 55 -92 kW	**22-144928** **22-144935**	**19-144948**	VA: thread: M14
B4	**1.6 i, 1.7 CTDi, 2.0 i Sport, 2.0 Type-R** 02/01 - 09/05 74 -147 kW	**22-151223** **22-151230**	**19-144948**	VA: thread: M16
B6 Sport	**1.6 i, 1.7 CTDi, 2.0 i Sport** 02/01 - 09/05 74 -118 kW	**35-115298** **35-115304**	**24-114240**	VA: thread: M16

H

HONDA

HONDA CIVIC VII Hatchback (EU, EP, ES)

B6 Sport	**2.0 Type-R** 09/01 - 09/05 147 kW	**35-114222** ↰ **35-114239** ↱	**24-114240**	VA: thread: M16
B8	**1.6 i, 1.7 CTDi, 2.0 i Sport** 02/01 - 09/05 74 -118 kW	**35-115311** ↰ **35-115328** ↱	**24-114240**	VA: thread: M16
B8	**2.0 Type-R** 09/01 - 09/05 147 kW	**35-114253** ↰ **35-114260** ↱	**24-114240**	VA: thread: M16
B12 PK	**1.6 i** 02/01 - 09/05 81 kW	**46-190215**		Conditions see certificates; thread: M16 VA: lowering (expertise): 30 mm; axle load to: 855 kg HA: lowering (expertise): 30 mm; axle load to: 850 kg
B12 SL	**1.4 i, 1.4 iS, 1.6 i** 02/01 - 09/05 55 -81 kW	**46-190246**		Conditions see certificates; thread: M16 VA: lowering (expertise): 45-50 mm; axle load to: 855 kg HA: lowering (expertise): 30 mm; axle load to: 850 kg
B14	**1.6 i, 1.7 CTDi, 2.0 i Sport** 02/01 - 09/05 74 -118 kW	**47-118768**		Conditions see certificates VA: lowering (expertise): 40-50 mm; axle load to: 955 kg; thread: M16 HA: lowering (expertise): 35-50 mm; axle load to: 850 kg
B14	**2.0 Type-R** 09/01 - 09/05 147 kW	**47-118768**		Conditions see certificates VA: lowering (expertise): 20-35 mm; axle load to: 955 kg; thread: M16 HA: lowering (expertise): 15-35 mm; axle load to: 850 kg
B16 PSS9	**1.6 i, 1.7 CTDi, 2.0 i Sport** 02/01 - 09/05 74 -118 kW	**48-118804**		Conditions see certificates VA: lowering (expertise): 40-50 mm; axle load to: 955 kg; thread: M16 HA: lowering (expertise): 35-50 mm; axle load to: 850 kg
B16 PSS9	**2.0 Type-R** 09/01 - 09/05 147 kW	**48-118804**		Conditions see certificates VA: lowering (expertise): 20-35 mm; axle load to: 955 kg; thread: M16 HA: lowering (expertise): 15-35 mm; axle load to: 850 kg

HONDA CIVIC VII Saloon (EU)

B4	**1.2, 1.3 IMA, 1.4, 1.6, 1.7, 1.8** 02/01 - 09/05 58 -103 kW	**22-144928** ↰ **22-144935** ↱	**19-144948**	VA: thread: M14
B4	**2.0** 10/03 - 09/05 118 kW	**22-151223** ↰ **22-151230** ↱	**19-144948**	VA: thread: M16
B6 Sport	**1.2, 1.3 IMA, 1.4, 1.6, 1.7, 1.8, 2.0** 02/01 - 09/05 58 -118 kW	**35-115298** ↰ **35-115304** ↱	**24-114240**	VA: thread: M16
B8	**1.2, 1.3 IMA, 1.4, 1.6, 1.7, 1.8, 2.0** 02/01 - 09/05 58 -118 kW	**35-115311** ↰ **35-115328** ↱	**24-114240**	VA: thread: M16
B12 PK	**1.4, 1.6** 02/01 - 09/05 66 -84 kW	**46-190215**		Conditions see certificates; thread: M16 VA: lowering (expertise): 30 mm; axle load to: 855 kg HA: lowering (expertise): 30 mm; axle load to: 850 kg
B12 SL	**1.3 IMA, 1.4, 1.6** 02/01 - 09/05 61 -84 kW	**46-190246**		Conditions see certificates; thread: M16 VA: lowering (expertise): 45-50 mm; axle load to: 855 kg HA: lowering (expertise): 30 mm; axle load to: 850 kg

HONDA CIVIC VII Coupe (EM2)

B3	**1.6 i, 1.7 i, 1.7 i VTEC** 02/01 - 12/01 81 -92 kW	**36-216390**	**36-216420**	with standard chassis
B3	**1.6 i, 1.7 i, 1.7 i VTEC** 01/02 - 12/02 81 -92 kW	**36-216406**	**36-216437**	with standard chassis
B3	**1.6 i, 1.7 i, 1.7 i VTEC** 01/03 - 12/05 81 -92 kW	**36-216413**	**36-216444**	with standard chassis
B4	**1.6 i, 1.7 i, 1.7 i VTEC** 02/01 - 12/05 81 -92 kW	**22-144928** ↰ **22-144935** ↱	**19-144948**	VA: thread: M14
B6 Sport	**1.6 i, 1.7 i, 1.7 i VTEC** 02/01 - 12/05 81 -92 kW	**35-115298** ↰ **35-115304** ↱	**24-114240**	VA: thread: M16

H

HONDA

HONDA CIVIC VII Coupe (EM2)

B8	**1.6 i, 1.7 i, 1.7 i VTEC** 02/01 - 12/05 81 -92 kW	**35-115311** **35-115328**	**24-114240**	VA: thread: M16
B12 SL	**1.6 i, 1.7 i, 1.7 i VTEC** 02/01 - 12/05 81 -92 kW	**46-190246**		Conditions see certificates; thread: M16 VA: lowering (expertise): 45-50 mm; axle load to: 855 kg HA: lowering (expertise): 30 mm; axle load to: 850 kg

HONDA CIVIC VIII Hatchback (FN, FK)

B3	**1.4, 1.6, 1.8** 09/05 - 61 -103 kW	**36-201747**	**36-216130**	with standard chassis
B3	**1.8** 01/06 - 103 kW	*36-200412*	**36-200504**	with standard chassis; equipment: Sport / Executive; Number of Doors: 5
B3	**2.2 CTDi** 01/06 - 103 kW	**36-200726**	**36-200504**	with standard chassis
B14	**1.4, 1.6, 1.8, 2.0** 09/05 - 61 -110 kW	**47-171329**		mark: FK/ FN; not for: Type R; Conditions see certificates VA: lowering (expertise): 25-40 mm; axle load to: 1085 kg HA: lowering (expertise): 20-40 mm; axle load to: 835 kg

HONDA CIVIC VIII Saloon (FD)

B14	**1.3, 1.6, 1.8, 2.0** 09/05 - 70 -114 kW	**47-171329**		mark: FD1; not for: Type R FD2; Without roadworthy certificate VA: lowering (expertise): 25-40 mm; axle load to: 1085 kg HA: lowering (expertise): 20-40 mm; axle load to: 835 kg

HONDA CIVIC II Shuttle (EE)

B4	**1.5 i 16V** 01/88 - 12/88 69 kW	*19-062792* *19-062808*	*19-063201*	-> CH.Nr.: S100001
B4	**1.5 i 16V** 01/89 - 12/89 69 kW	*19-062815* *19-062822*	*19-063218*	CH.Nr.: S100001-> S200001
B4	**1.5 i 16V** 01/90 - 11/91 69 kW	*19-062815* *19-062822*	*19-063201*	CH.Nr.: S200001 ->
B4	**1.6 i 16V 4WD** 01/88 - 12/88 80 -81 kW	*19-062792* *19-062808*	*19-063201*	-> CH.Nr.: S100001
B4	**1.6 i 16V 4WD** 01/89 - 12/89 80 -81 kW	*19-062815* *19-062822*	*19-063201*	CH.Nr.: S100001-> S200001
B4	**1.6 i 16V 4WD** 01/90 - 02/95 81 kW	*19-062815* *19-062822*	*19-063201*	CH.Nr.: S200001 ->

HONDA CONCERTO (HW)

B4	**1.4, 1.5 i 16V, 1.6, 1.6 16V, 1.6 i 16V, 1.8 TD** 08/89 - 10/96 58 -96 kW	*22-047304* *22-047311*	*19-063225*	

HONDA CONCERTO Saloon (HWW)

B4	**1.4, 1.5 i 16V, 1.6 16V, 1.6 i 16V** 08/89 - 03/95 61 -90 kW	*22-047304* *22-047311*	*19-063225*	

HONDA CR-V I (RD)

B3	**2.0, 2.0 16V** 01/99 - 02/02 94 -108 kW	**36-215324**	**36-200498**	with standard chassis
B4	**2.0, 2.0 16V** 01/99 - 02/02 94 -108 kW	*19-135083*	**19-135090**	
B6 Offroad	**2.0, 2.0 16V** 01/99 - 02/02 94 -108 kW	**24-023382**	**24-023399**	all-wheel drive

H

HONDA				
HONDA CR-V II (RD_)				
B3	**2.0** 07/02 - 09/06 110 kW	**36-200184**	**36-200092**	with standard chassis
B3	**2.2 CTDi** 02/05 - 09/06 103 kW	**36-199907**	**36-215898**	with standard chassis
B4	**2.0, 2.2 CTDi, 2.4 Vtec** 03/02 - 09/06 103 -118 kW	**22-173560** **22-173577**	**19-173580**	
B6 Offroad	**2.0, 2.2 CTDi, 2.4 Vtec** 03/02 - 09/06 103 -118 kW	**35-107460** **35-107477**	**24-107488**	
HONDA CR-V III				
B3	**2.0 i-VTEC** 01/07 - 105 -110 kW	**36-217403** **36-217397**	**36-217434**	with standard chassis; manual transmission
B3	**2.2 i-CTDi, 2.2 i-DTEC** 01/07 - 103 -110 kW	**36-217427** **36-217410**	**36-217434**	with standard chassis
B4	**2.0 i-VTEC, 2.2 i-CTDi, 2.2 i-DTEC, 2.4, 2.4 i-VTEC** 09/09 - 103 -125 kW	**22-214089** **22-214096**	**19-214108**	
HONDA CRX I (AF, AS)				
B3	**1.3, 1.5 i, 1.6 i 16V** 10/83 - 10/87 52 -92 kW		**36-163885**	with standard chassis
B4	**1.3, 1.5 i** 10/83 - 10/87 52 -74 kW	*22-047281* *22-047298*	*19-063164*	
B4	**1.6 i 16V** 03/86 - 10/87 92 kW		*19-063164*	
HONDA CRX II (ED, EE)				
B3	**1.4 GL, 1.6 i 16V, 1.6 i 16V Vtec** 10/89 - 02/92 66 -110 kW		**36-163885**	with standard chassis
B4	**1.4 GL, 1.6 i 16V** 01/89 - 02/92 66 -96 kW	*19-062778* *19-062785*	*19-063195*	
B4	**1.6 i 16V** 10/87 - 12/88 79 -96 kW		*19-063188*	
B4	**1.6 i 16V Vtec** 10/89 - 02/92 110 kW	*19-062778* *19-062785*	*19-063195*	
B8	**1.4 GL, 1.6 i 16V, 1.6 i 16V Vtec** 10/89 - 02/92 66 -110 kW	**24-013819** **24-013802**	**24-013826**	
HONDA CRX III (EH, EG)				
B4	**1.5, 1.6 ESi, 1.6 i VTi** 03/92 - 12/98 77 -118 kW	*19-062839* *19-062846*	*19-063195*	
B8	**1.5, 1.6 ESi, 1.6 i VTi** 03/92 - 12/98 77 -118 kW	**24-016032** **24-016049**	**24-016056**	
HONDA HR-V (GH)				
B4	**1.6 16V, 1.6 16V 4WD** 03/99 - 77 -91 kW	**i.V.** **i.V.**	**19-165479**	HA: -> 12/99
B4	**1.6 16V, 1.6 16V 4WD** 03/99 - 77 -91 kW	**i.V.** **i.V.**	**19-165486**	HA: 01/00 ->

H

HONDA

HONDA HR-V (GH)

HONDA INTEGRA Coupe (DC2, DC4)

B6 Sport	**1.8, 1.8 VTiR** 07/93 - 11/01 101 -125 kW	**24-016032** VL **24-016049** VL	**24-016056** HL	mark: ex. Type R
B6 Sport	**1.8 Type-R** 11/97 - 10/01 140 kW	**24-023405** VL	**24-023412** VO	

HONDA JAZZ II (GD)

B3	**1.2, 1.3 iDSi, 1.4, 1.5, 1.5 FF** 03/02 - 57 -81 kW	**36-214815**	**36-212910**	with standard chassis
B4	**1.2, 1.3 iDSi, 1.4, 1.5, 1.5 FF** 03/02 - 03/05 57 -81 kW	22-165794 22-165800	**19-158761** VO	
B4	**1.2, 1.3 iDSi, 1.4, 1.4 Flex, 1.5, 1.5 FF** 04/05 - 57 -81 kW	22-223456 22-223463	**19-158761** VO	

HONDA JAZZ III (GE)

B4	**1.4, 1.5 i** 01/09 - 66 -88 kW	22-213808 22-213815	**19-213828** VO	
B14	**1.4, 1.4 HYBRID, 1.5 Flexfuel, 1.5 i** 07/08 - 65 -88 kW	**47-165854**		Without roadworthy certificate VA: lowering (expertise): 0-30 mm HA: lowering (expertise): 0-30 mm
B14	**1.4, 1.4 HYBRID, 1.5 Flexfuel, 1.5 i** 07/08 - 65 -88 kW	**47-172401**		Without roadworthy certificate VA: lowering (expertise): 20-45 mm HA: lowering (expertise): 15-45 mm

HONDA FIT

B4	**1.3, 1.5** 05/03 - 63 -81 kW	22-165794 22-165800	**19-158761** VO	

HONDA LEGEND I (HS, KA)

B6 Sport	**2.7 i 24V** 01/88 - 12/90 124 kW	*24-011990* VX *24-012003* VX		

HONDA LEGEND I Coupe (KA3)

B6 Sport	**2.7 i 24V** 10/87 - 12/90 124 kW	*24-011990* VX *24-012003* VX		

HONDA LOGO (GA3)

B4	**1.3** 03/99 - 03/02 48 kW	i.V. i.V.	**19-174211** VO	

HONDA NSX Coupe (NA)

B6 Sport	**3.0 24V Vtec, 3.0 24V Vtec Automatik, 3.2 24V Vtec** 06/90 - 09/05 188 -206 kW	**24-016636** VO	**24-016650** VO	Conditions see certificates VA: lowering (expertise): 0-25 mm HA: lowering (expertise): 0-25 mm

HONDA NSX Convertible (NA)

B6 Sport	**3.0 24V Vtec, 3.0 24V Vtec Automatic, 3.2 24V Vtec** 03/95 - 09/05 188 -206 kW	**24-016636** VO	**24-016650** VO	Conditions see certificates VA: lowering (expertise): 0-25 mm HA: lowering (expertise): 0-25 mm

HONDA PRELUDE III (BA)

B3	**2.0, 2.0 EX, 2.0 i EX 16V, 2.0 i EX 16V CAT** 04/87 - 01/92 80 -110 kW	**36-163847**		with standard chassis

HONDA

HONDA PRELUDE III (BA)

B4	**2.0, 2.0 EX** 04/87 - 01/92 80 -84 kW	*19-062730* *19-062747*	*19-063263*	

HONDA PRELUDE IV (BB)

B4	**2.0 i 16V, 2.2 i 16V Vtec, 2.3 i 16V** 02/92 - 09/96 98 -136 kW		*19-063256*	
B6 Sport	**2.0 i 16V, 2.2 i 16V Vtec, 2.3 i 16V** 02/92 - 09/96 98 -136 kW	*24-016780* *24-016797*		
B8	**2.0 i 16V, 2.2 i 16V Vtec, 2.3 i 16V** 02/92 - 09/96 98 -136 kW	*24-017763*		
B12 PK	**2.0 i 16V, 2.2 i 16V Vtec, 2.3 i 16V** 02/92 - 09/96 98 -136 kW	*46-190192*		Conditions see certificates VA: lowering (expertise): 30 mm; axle load to: 980 kg HA: lowering (expertise): 30 mm; axle load to: 825 kg

HONDA PRELUDE V (BB)

B4	**2.0 16V** 10/96 - 10/00 98 kW	*19-181424*	*19-063256*	
B4	**2.2 16V** 10/96 - 10/00 136 -147 kW	*19-181424*	*19-063256*	mark: VTEC,VTEC VTi,VTi-R
B4	**2.2 16V** 10/96 - 10/00 136 -147 kW		*19-063256*	mark: VTEC VTiS

HONDA SHUTTLE (RA)

B4	**2.2 16V, 2.3 16V** 10/94 - 06/04 110 kW		*19-063287*	
B6 Sport	**2.2 16V, 2.3 16V** 10/94 - 06/04 110 kW	**24-021050**		

HONDA S2000 (AP)

B14	**2.0, 2.0 Vtec, 2.2 Vtec** 03/99 - 170 -184 kW	**47-080386**	Conditions see certificates VA: lowering (expertise): 10-35 mm; axle load to: 710 kg HA: lowering (expertise): 10-35 mm; axle load to: 840 kg
B16 PSS9	**2.0, 2.0 Vtec, 2.2 Vtec** 03/99 - 170 -184 kW	**48-088657**	Conditions see certificates VA: lowering (expertise): 10-35 mm; axle load to: 710 kg HA: lowering (expertise): 10-35 mm; axle load to: 840 kg

HUMMER

HUMMER HUMMER H2

B6 Offroad	**6.0 All-wheel Drive** 09/02 - 09/04 232 kW	**24-060813**	**24-066471**	without off-road suspension

HUMMER HUMMER H2 SUT

B6 Offroad	**6.0** 09/04 - 237 kW	**24-060813**	**24-066471**	without off-road suspension

HYUNDAI

HYUNDAI ACCENT (X-3)

B4	**1.3, 1.3 i 12V, 1.5 i 12V, 1.5 i 16V** 10/94 - 04/97 44 -73 kW	*22-047342* *22-047359* **11-101437** SP	*22-048820* *22-048837*	

HYUNDAI				
HYUNDAI ACCENT (X-3)				
B4	**1.3, 1.3 i 12V, 1.5 i 12V, 1.5 i 16V** 05/97 - 01/00 44 -73 kW	*22-047342* *22-047359* **11-101437** SP	*22-048844* *22-048851*	
B6 Sport	**1.3, 1.3 i 12V, 1.5 i 12V, 1.5 i 16V** 10/94 - 01/00 44 -73 kW	**34-050514**	**34-050521**	
HYUNDAI ACCENT Saloon (X-3)				
B4	**1.3, 1.3 i 12V, 1.5 i 12V, 1.5 i 16V** 10/94 - 04/97 44 -73 kW	*22-047342* *22-047359* **11-101437** SP	*22-048820* *22-048837*	
B4	**1.3, 1.3 i 12V, 1.5 i 12V, 1.5 i 16V** 05/97 - 01/00 44 -73 kW	*22-047342* *22-047359* **11-101437** SP	*22-048844* *22-048851*	
B6 Sport	**1.3, 1.3 i 12V, 1.5 i 12V, 1.5 i 16V** 10/94 - 01/00 44 -73 kW	**34-050514**	**34-050521**	
HYUNDAI ACCENT (LC)				
B4	**1.3, 1.5, 1.5 CRDi, 1.6, 1.3, 1.5, 1.5 CRDi, 1.6** 01/00 - 55 -77 kW	**22-128201** **22-128218**	*22-048844* *22-048851*	
HYUNDAI ACCENT Saloon (LC)				
B4	**1.3** 01/00 - 11/05 55 kW	**22-128201** **22-128218**	*22-048844* *22-048851*	
HYUNDAI ATOS (MX)				
B4	**0.8, 1.0 i, 1.1, 1.3** 02/98 - 08/08 38 -63 kW	*22-121349* *22-121356*	**19-121369** OIO	
HYUNDAI ATOS PRIME (MX)				
B4	**1.0 i** 08/99 - 40 -43 kW	*22-121349* *22-121356*	**19-121369** OIO	
HYUNDAI COUPE (RD)				
B4	**1.6 16V, 1.6 i 16V** 12/96 - 12/01 84 -85 kW	*22-047328* *22-047335*		with ABS
B4	**1.8, 2.0, 2.0 16V** 07/96 - 04/02 94 -102 kW	*22-047328* *22-047335*		
HYUNDAI COUPE (GK)				
B4	**1.6 16V, 2.0, 2.0 GLS, 2.7 V6** 08/01 - 77 -123 kW	**22-112774** **22-112781**	**22-112798** **22-112804**	
B6 Sport	**1.6 16V, 2.0, 2.0 GLS, 2.7 V6** 08/01 - 77 -123 kW	**35-107354** **35-107361**	**35-107378** **35-107385**	with standard chassis; with sports suspension
B8	**1.6 16V, 2.0, 2.0 GLS, 2.7 V6** 08/01 - 77 -123 kW	**35-107392** **35-107408**	**35-110873** **35-110880**	with standard chassis; with sports suspension
B12 PK	**2.0, 2.0 GLS, 2.7 V6** 08/01 - 100 -123 kW	**46-190284**		Conditions see certificates VA: lowering (expertise): 30 mm; axle load to: 1015 kg HA: lowering (expertise): 30 mm; axle load to: 880 kg
B12 SL	**2.0, 2.0 GLS, 2.7 V6** 08/01 - 100 -123 kW	**46-190291**		Conditions see certificates VA: lowering (expertise): 45-50 mm; axle load to: 1000 kg HA: lowering (expertise): 30 mm; axle load to: 860 kg

H

HYUNDAI

HYUNDAI COUPE (GK)

B16 PSS9	**1.6 16V, 2.0, 2.0 GLS, 2.7 V6** 08/01 - 77 -123 kW	*48-108041*		Conditions see certificates VA: lowering (expertise): 35-50 mm; axle load to: 1000 kg HA: lowering (expertise): 30-50 mm; axle load to: 860 kg

HYUNDAI ELANTRA (XD)

B4	**1.6, 1.8, 2.0, 2.0 CRDi, CRDi** 06/00 - 66 -105 kW	*22-047328* *22-047335*	**i.V.** **i.V.**	with ABS

HYUNDAI ELANTRA Saloon (XD)

B4	**1.6, 1.6 CRDi, 1.8, 2.0, 2.0 CRDi** 04/01 - 77 -105 kW	*22-047328* *22-047335*		with ABS

HYUNDAI GALLOPER I

B6 Offroad	**2.5 TD, 2.5 TD intercooler, 3.0 V6** 08/91 - 07/98 62 -104 kW	**24-013321**	**24-013338**	

HYUNDAI GALLOPER II (JK-01)

B4	**2.5 TCi D, 2.5 TD, 2.5 TD intercooler, 2.6 TD All-wheel Drive, 3.0 V6** 08/98 - 63 -104 kW	*19-128160*	*19-128177*	with Coil Spring Axle

HYUNDAI GETZ (TB)

B4	**1.1, 1.3, 1.4, 1.5 CRDi, 1.5 CRDi GLS, 1.5 GL, 1.6** 09/02 - 46 -81 kW	**22-151773** **22-151780**	**19-151793**	

HYUNDAI GENESIS Coupe

B6 Sport	**2.0 T, 3.8 V6** 01/10 - 157 -223 kW	**35-196389**	**24-196390**	mark: BK
B8	**2.0 T, 3.8 V6** 01/10 - 157 -223 kW	**35-197348**	**24-193702**	mark: BK
B14	**2.0 T, 3.8 V6** 01/10 - 157 -223 kW	**47-193680**		mark: BK; Conditions see certificates VA: lowering (expertise): 20-30 mm; axle load to: 1000 kg HA: lowering (expertise): 10-30 mm; axle load to: 1050 kg

HYUNDAI H-1 Bus (KMF)

B4	**2.4, 2.5 CRDi, 2.5 TD** 10/97 - 12/07 59 -103 kW	**19-183572**	**19-183558**	Short Wheelbase; with Coil Spring Axle
B4	**2.4, 2.5 CRDi, 2.5 TD, 2.5 CRDi, 2.5 TD** 10/97 - 12/07 59 -103 kW	**19-183572**	**19-183565**	with Leaf spring axle

HYUNDAI i10

B4	**1.1, 1.1 CRDi, 1.2** 10/07 - 48 -63 kW	**i.V.** **i.V.**	**19-218458**	with standard chassis

HYUNDAI i30

B4	**1.4, 1.6, 1.6 CRDi, 2.0, 2.0 CRDi** 10/07 - 66 -105 kW	**i.V.** **i.V.**	**19-196350**	with standard chassis
B6 Sport	**1.4, 1.6, 1.6 CRDi, 2.0, 2.0 CRDi** 10/07 - 66 -105 kW	**35-193654** **35-193661**	**24-193672**	
B14	**1.4, 1.6, 1.6 CRDi, 2.0, 2.0 CRDi** 10/07 - 66 -105 kW	**47-172708**		Conditions see certificates VA: lowering (expertise): 30-45 mm; axle load to: 1090 kg HA: lowering (expertise): 15-40 mm; axle load to: 1055 kg

HYUNDAI

HYUNDAI i30 CW Estate

B4	**1.4, 1.6, 1.6 CRDi, 2.0, 2.0 CRDi** 02/08 - 66 -105 kW	i.V. i.V.	**19-196350**	with standard chassis

HYUNDAI LANTRA I (J-1)

B4	**1.5 i.e.** 10/90 - 11/95 63 kW	*22-047366*	*19-063294*	
B4	**1.6 i.e. 16V** 10/90 - 11/95 78 -84 kW	*22-047366*	*19-063294*	
B4	**1.8 i.e. 16V** 10/90 - 11/95 93 kW	*22-047366*	*19-063294*	
B6 Sport	**1.5 i.e., 1.6 i.e. 16V, 1.8 i.e. 16V** 10/90 - 11/95 63 -93 kW	**34-050361**	**24-020459**	

HYUNDAI LANTRA II (J-2)

B4	**1.5 12V** 12/96 - 09/00 65 kW	*22-047328* *22-047335*		with ABS
B4	**1.6 16V, 1.6 i, 1.8 16V, 1.9 D, 2.0, 2.0 16V** 11/95 - 09/00 50 -102 kW	*22-047328* *22-047335*		
B6 Sport	**1.5 12V, 1.6 16V, 1.6 i, 1.8 16V, 1.9 D, 2.0, 2.0 16V** 08/96 - 09/00 50 -102 kW	**34-050538**	**34-050545**	

HYUNDAI LANTRA II Wagon (J2)

B4	**1.5 12V** 04/97 - 09/00 65 kW	*22-047328* *22-047335*		with ABS
B4	**1.6 16V, 1.6 i, 1.8 16V, 2.0, 2.0 16V** 02/96 - 66 -102 kW	*22-047328* *22-047335*		
B4	**1.9 D** 03/98 - 50 kW	*22-047328* *22-047335*		
B6 Sport	**1.5 12V, 1.6 16V, 1.6 i, 1.8 16V, 1.9 D, 2.0, 2.0 16V** 12/96 - 50 -102 kW	**34-050538**	**34-050545**	

HYUNDAI MATRIX (FC)

B4	**1.5 CRDi, 1.6, 1.8** 06/01 - 60 -90 kW	**22-167293** **22-167309**	**22-166494** **22-166500**	with standard chassis

HYUNDAI PONY/EXCEL Saloon (X-2)

B4	**1.3, 1.5, 1.5 i** 01/90 - 01/95 48 -62 kW	**11-101468** SP		
B6 Sport	**1.3, 1.5, 1.5 i** 01/90 - 01/95 48 -62 kW	*34-050248*	*24-004237*	

HYUNDAI SANTAMO

B4	**2.0 16V, 2.0 16V 4x4** 05/99 - 102 kW	*22-047823*	*19-063447*	

H

HYUNDAI			
HYUNDAI SANTA FÉ (SM)			
B4 **2.0, 2.0 CRDi, 2.0 CRDi 4x4, 2.0 CRDi All-wheel Drive, 2.2 CRDi, 2.2 CRDi 4x4, 2.4 16V, 2.4 16V 4x4, 2.7, 2.7 4x4, 2.7 V6 4x4** 02/01 - 03/06 83 -139 kW	i.V. i.V.	**19-183473**	
HYUNDAI SANTA FÉ (CM)			
B4 **2.2 CRDi, 2.2 CRDi 4x4, 2.2 CRDi GLS, 2.2 CRDi GLS 4x4, 2.7, 2.7 4x4, 2.7 V6 GLS, 2.7 V6 GLS 4x4** 03/06 - 102 -139 kW	i.V. i.V.	**19-183459**	
HYUNDAI S COUPE (SLC)			
B4 **1.5 i, 1.5 i Turbo** 02/90 - 05/96 62 -85 kW	**11-101468** *SP*		
B6 Sport **1.5 i, 1.5 i Turbo** 02/90 - 05/96 62 -85 kW	*34-050248*	*24-004237*	
HYUNDAI SONATA II (Y-2)			
B6 Sport **1.8 i, 2.0 i, 2.0 i 16V, 2.4 i, 3.0 i V6** 09/88 - 10/93 70 -107 kW	**34-050255**	**24-015837**	
HYUNDAI SONATA V (NF)			
B4 **2.0 CRDi, 2.0 VVTi GLS, 2.2 CRDi GLS, 2.4, 3.3** 06/05 - 100 -184 kW	i.V. *19-214498*	**19-214481**	
B14 **2.0 CRDi, 2.0 VVTi GLS, 2.2 CRDi GLS, 2.4, 3.3** 06/05 - 100 -184 kW	**47-146631**		Conditions see certificates VA: lowering (expertise): 30-50 mm; axle load to: 1200 kg HA: lowering (expertise): 30-50 mm; axle load to: 1070 kg
HYUNDAI STAREX (H1)			
B4 **2.4, 2.5 CRDi, 2.5 D, 2.5 TCi, 2.5 TD, 2.6 TD** 06/97 - 12/07 59 -103 kW	**19-183572**	**19-183558**	Short Wheelbase; with Coil Spring Axle
B4 **2.4, 2.5 CRDi, 2.5 D, 2.5 TCi, 2.5 TD, 2.6 TD** 06/97 - 12/07 59 -103 kW	**19-183572**	**19-183565**	with Leaf spring axle
HYUNDAI TERRACAN (HP)			
B4 **2.5 D, 2.5 TD, 2.9 CRDi, 3.5 i V6 4WD** 06/01 - 59 -147 kW	**19-184135**	**19-184128**	
B6 Offroad **2.5 D, 2.5 TD, 2.9 CRDi, 3.5 i V6 4WD** 06/01 - 59 -147 kW	**24-113205**	**24-113212**	
INFINITI			
INFINITI G Coupe			
B16 PSS10 **37** 10/08 - 235 -243 kW	**48-165815**		Without roadworthy certificate VA: lowering (expertise): 50 mm HA: lowering (expertise): 30 mm
INFINITI G Convertible			
B16 PSS10 **37** 09/10 - 235 kW	**48-165815**		Without roadworthy certificate VA: lowering (expertise): 50 mm HA: lowering (expertise): 30 mm

H

I

INFINITI				
INFINITI G20				
B6 Sport	**2.0** 01/90 - 12/97 85 kW	**24-017824**	**34-030110**	mark: P10 HA: for bolted struts only
INNOCENTI				
INNOCENTI MINI				
B6 Sport	**0.55, 0.65, 1.0, 1.3, 1.3 De Tomaso** 08/76 - 01/95 23 -51 kW	**24-181464**	**24-181471**	
IRMSCHER				
IRMSCHER SENATOR				
B6 Sport	**4.0 24V** 01/90 - 12/96 200 kW	**35-000945**	**24-011105**	without electronic suspension control
B8	**4.0 24V** 01/90 - 12/96 200 kW	**35-003717**	**24-015288**	without electronic suspension control
IRMSCHER OMEGA Caravan				
B6 Sport	**4.0 i** 01/90 - 12/96 200 kW	**35-000945**	**24-017701**	without ride height adjustment
ISUZU				
ISUZU ASCENDER				
B6 Offroad	**4.2** 03/03 - 217 kW	*24-103336*	*24-103350*	
ISUZU ASKA				
B6 Sport	**2.0 D, 2.0 TD** 04/83 - 06/89 50 -62 kW		*24-000970*	
ISUZU GEMINI Saloon				
B3	**1.5 D** 06/74 - 09/84 37 kW	**36-162574**	**36-162741**	with standard chassis
B4	**1.5 D** 06/74 - 09/84 37 kW	**19-019444**		
MS	**1.5 D** 06/74 - 09/84 37 kW	**24-009089**	**24-009188**	mark: Rallye
MS	**1.5 D** 06/74 - 09/84 37 kW	**24-633369**	**24-633376**	mark: Race VA: charakteristic: 320/160 HA: charakteristic: 195/90
ISUZU PIAZZA (JR_)				
B6 Sport	**2.0 Turbo** 06/85 - 12/90 104 kW	**24-008839**	**24-003179**	VA: charakteristic: 331/124
ISUZU TROOPER (UBS)				
B4	**2.8 TD** 10/87 - 12/91 71 -78 kW	**19-061085**	**19-106632**	
B6 Offroad	**2.8 TD** 12/86 - 12/91 71 -78 kW	**24-001861**	**24-012393**	CH.Nr.: 4524289 ->

ISUZU				
ISUZU TROOPER Open Off-Road Vehicle (UBS)				
B4	**2.2, 2.2 D** 01/83 - 12/85 45 -58 kW	**19-061085**	*19-061115*	
B4	**2.6 i** 10/87 - 12/91 85 kW	**19-061085**	**19-106632**	
B4	**2.2 TD, 2.3** 03/84 - 10/86 53 -66 kW	**19-061085**	*19-061115*	
B4	**2.2 TD, 2.3** 11/86 - 12/91 53 -66 kW	**19-061085**	**19-106632**	
B6 Offroad	**2.2, 2.2 D, 2.3** 01/83 - CH-Nr. 45 -66 kW	**24-001861**	**24-001960**	-> CH.Nr.: 4524288
B6 Offroad	**2.2 TD** 03/84 - 11/86 53 kW	**24-001861**	**24-001960**	-> CH.Nr.: 4524288
B6 Offroad	**2.2 TD, 2.3, 2.6 i** 12/86 - 12/91 53 -85 kW	**24-001861**	**24-012393**	CH.Nr.: 4524289 ->
ISUZU TROOPER (UB)				
B4	**3.2** 01/92 - 01/98 130 kW	**19-061085**	**19-107141**	
ISUZU TROOPER Open Off-Road Vehicle (UB)				
B4	**3.2** 01/92 - 01/98 130 kW	**19-061085**	**19-107141**	
ISUZU TROOPER				
B4	**3.0 DTI, 3.5 V6 24V** 04/00 - 118 -158 kW	**19-061108**	**19-107141**	
B6 Offroad	**3.0 DTI, 3.5 V6 24V** 04/00 - 118 -158 kW	**24-017381**	**24-066648**	with standard chassis; all-wheel drive
ISUZU TROOPER Open Off-Road Vehicle				
B4	**3.0 DTI, 3.5 V6 24V** 04/00 - 118 -158 kW	**19-061108**	**19-107141**	
JAGUAR				
JAGUAR S-TYPE (CCX)				
B4	**2.5 V6, 2.7 D** 04/02 - 147 -152 kW	**24-065955**	**24-066457**	with standard chassis; without electronic suspension control
B4	**2.5 V6, 2.7 D** 04/02 - 147 -152 kW	**24-067447**	**24-067454**	with sports suspension; without electronic suspension control
B4	**3.0 V6, 4.0 V8** 01/99 - 04/02 175 -203 kW	**24-024921**	**24-026628**	without electronic suspension control; with standard chassis
B4	**3.0 V6** 04/02 - 175 kW	**24-065955**	**24-066457**	with standard chassis; without electronic suspension control
B4	**3.0 V6** 04/02 - 175 kW	**24-067447**	**24-067454**	with sports suspension; without electronic suspension control
B4	**4.2 V8, R 4,2 V8** 04/02 - 219 -291 kW	**24-067287**	**24-067713**	with standard chassis; without electronic suspension control

I

J

JAGUAR				
JAGUAR S-TYPE (CCX)				
B4	**4.2 V8, R 4,2 V8** 04/02 - 219 -291 kW	**24-067430** HA	**24-067720** HO	with sports suspension; without electronic suspension control
B4 ACD	**2.5 V6, 2.7 D** 04/02 - 147 -152 kW	**20-070748** HA	**20-070779** HO	with sports suspension; with electronic suspension control; with CATS
B4 ACD	**3.0 V6, 4.0 V8** 01/99 - 04/02 175 -203 kW	**20-070632** HO	**20-070649** HO	with electronic suspension control; with sports suspension
B4 ACD	**3.0 V6** 04/02 - 175 kW	**20-070748** HA	**20-070779** HO	with sports suspension; with electronic suspension control; with CATS
B4 ACD	**4.2 V8, R 4,2 V8** 04/02 - 219 -291 kW	**20-070854** HA	**20-070885** HO	with sports suspension; with electronic suspension control; with CATS
B6 Sport	**3.0 V6, 4.0 V8** 01/99 - 04/02 175 -203 kW	**24-067799** HO	**24-067782** HO	without electronic suspension control; mono-tube
JAGUAR XF				
B4	**2.7 D, 3.0, 3.0 D, 4.2, 4.2 Kompressor, 5.0, 5.0 Kompressor** 03/08 - 152 -375 kW	**24-203012** HA	**24-203029** HO	without electronic suspension control
B4 DTC	**3.0, 4.2, 5.0** 03/08 - 175 -283 kW	**26-203058** HA	**26-203065** HO	with electronic suspension control; mark: ACC
B4 DTC	**2.7 D, 3.0 D, 4.2 Kompressor, 5.0 Kompressor** 03/08 - 152 -375 kW	**26-203072** HA	**26-203089** HO	with electronic suspension control; mark: ACC
B4 ACD	**2.7 D, 3.0, 3.0 D, 4.2, 4.2 Kompressor, 5.0, 5.0 Kompressor** 03/08 - 152 -375 kW	**26-203034** HO	**26-203041** HO	with electronic suspension control
JAGUAR XJ				
B4	**12 5.3, 12 H.E., 2.8, 6 2.8, 6 3.4, 6 4.2, Sovereign V12** 10/69 - 12/92 110 -217 kW		*24-020909* OO	with standard chassis; without ride height adjustment
B6 Sport	**12 5.3, 12 H.E., 2.8, 6 2.8, 6 3.4, 6 4.2, Sovereign V12** 10/69 - 12/92 110 -217 kW	**24-024457** HO	**24-024464** OO	without ride height adjustment
JAGUAR XJS Coupe				
B4	**3.6, 3.6 24V, 4.0, 5.3, 5.3 H.E., 6.0** 07/81 - 12/92 136 -248 kW		*24-020909* OO	with standard chassis; without ride height adjustment
B6 Sport	**3.6, 4.0, 5.3, 5.3 H.E., 6.0** 07/81 - 12/92 136 -248 kW	**24-024457** HO	**24-024464** OO	
JAGUAR XJSC Convertible				
B4	**3.6, 4.0, 5.3, 5.3 H.E., 6.0** 09/85 - 03/96 136 -222 kW		*24-020909* OO	with standard chassis; without ride height adjustment
B6 Sport	**3.6, 4.0, 5.3, 5.3 H.E., 6.0** 09/85 - 03/96 136 -222 kW	**24-024457** HO	**24-024464** OO	
JAGUAR XJ (XJ 40, 81)				
B6 Sport	**4.0, 6 2.9, 6 3.2 24V, 6 3.6, 6 4.0** 09/89 - 11/94 108 -187 kW	**24-018043** HA	**24-018050** HO	without ride height adjustment

J

JAGUAR				
JAGUAR XJ (X300)				
B4	**6 3.2, 6 Sovereign 4.0** 11/94 - 07/97 155 -177 kW	**24-018616** HA	**24-018586** HO	
B4	**12 6.0, R Super Charged 4.0** 11/94 - 07/97 229 -235 kW	**24-018630** HA	**24-018647** HO	
JAGUAR XJ (NAW, NBW)				
B4	**8 3.2, 8 4.0** 07/97 - 05/03 174 -209 kW	**24-023740** HO	**24-023757** HO	with standard chassis; without electronic suspension control
B4	**8 3.2, 8 4.0** 07/97 - 05/03 174 -209 kW	**24-023726** HO	**24-023733** HO	with sports suspension; without electronic suspension control
B4 ACD	**8 3.2, 8 4.0** 07/97 - 05/03 174 -209 kW	**20-070434** HO	**20-070441** HO	with standard chassis; with electronic suspension control; with CATS
B4 ACD	**8 3.2, 8 4.0** 07/97 - 05/03 174 -209 kW	**20-070502** HO	**20-070519** HO	with sports suspension; with electronic suspension control; with CATS
JAGUAR XJ (X350, X358)				
B4 AMC	**6 2,7 D, 6 3.0, 8 3.5, 8 4.2, R 4.2** 05/03 - 152 -291 kW	**44-069483**	**44-069506**	with standard chassis; with sports suspension; with air suspension
JAGUAR XK 8 Coupe (QEV)				
B4	**4.0, 4.2** 03/96 - 209 -267 kW	**24-067263** HO	**24-067270** HO	without electronic suspension control
B4 ACD	**4.0** 03/96 - 209 -267 kW	**20-070540** HO	**20-070557** HO	with electronic suspension control; with CATS
B4 ACD	**4.2** 08/02 - 219 kW	**20-070830** HO	**20-070847** HO	with electronic suspension control; with CATS
B4 ACD	**R 4,2** 08/02 - 291 kW	**20-070816** HO	**20-070823** HO	with electronic suspension control; with CATS
JAGUAR XK 8 Convertible (QDV)				
B4	**4.0, 4.2** 03/96 - 209 -267 kW	**24-067263** HO	**24-067270** HO	without electronic suspension control
B4 ACD	**4.0** 03/96 - 209 -267 kW	**20-070540** HO	**20-070557** HO	with electronic suspension control; with CATS
B4 ACD	**4.2** 08/02 - 219 kW	**20-070830** HO	**20-070847** HO	with electronic suspension control; with CATS
B4 ACD	**R 4,2** 08/02 - 291 kW	**20-070816** HO	**20-070823** HO	with electronic suspension control; with CATS
JAGUAR XK Coupe				
B4	**3.5 XK, 4.2 XK8, 4.2 XKR** 03/06 - 190 -306 kW	**24-114455** HA	**24-114462** HO	without electronic suspension control; without CATS
B4 ACD	**3.5 XK, 4.2 XKR** 03/06 - 190 -306 kW	**20-114497** HA	**20-114503** HO	with electronic suspension control; with CATS
B4 ACD	**4.2 XK8** 03/06 - 219 kW	**20-114411** HA	**20-114428** HO	with electronic suspension control; with CATS

J

JAGUAR				
JAGUAR XK Convertible				
B4	**4.2 XK8, 4.2 XKR** 03/06 - 219 -306 kW	*24-114479*	*24-114486*	without electronic suspension control; without CATS
B4 ACD	**4.2 XK8** 03/06 - 219 kW	**20-114435**	**20-114428**	with electronic suspension control; with CATS
B4 ACD	**4.2 XKR** 03/06 - 306 kW	**20-114510**	**20-114527**	with electronic suspension control; with CATS
JAGUAR X-TYPE (CF1)				
B4	**2.0 V6** 03/02 - 10/05 115 kW	**22-053596**	**24-064927**	with standard chassis; front wheel drive
B4	**2.0 V6** 03/02 - 10/05 115 kW	**22-053602**	**24-062657**	with sports suspension; front wheel drive
B4	**2.0 D** 07/03 - 10/05 96 kW	**22-053596**	**24-064927**	with standard chassis; front wheel drive
B4	**2.0 D** 07/03 - 10/05 96 kW	**22-053602**	**24-062657**	with sports suspension; front wheel drive
B4	**2.0 D, 2.0 V6, 2.2 D, 2.5 V6, 3.0 V6** 06/01 - 96 -169 kW	**22-053619**	**24-062275**	with standard chassis; all-wheel drive
B4	**2.0 D, 2.0 V6, 2.2 D, 2.5 V6, 3.0 V6** 06/01 - 96 -169 kW	**22-053626**	**24-029810**	with sports suspension; all-wheel drive
B6 Sport	**2.0 D, 2.0 V6, 2.2 D, 2.5 V6, 3.0 V6** 06/01 - 96 -169 kW	**35-051497**	**24-066761**	front wheel drive
B8	**2.0 D, 2.0 V6, 2.2 D, 2.5 V6, 3.0 V6** 06/01 - 96 -169 kW	**35-051503**	**24-066778**	front wheel drive
B12 PK	**2.0 D, 2.0 V6, 2.2 D, 2.5 V6, 3.0 V6** 06/01 - 96 -169 kW	**46-194046**		without CATS; front wheel drive; Conditions see certificates VA: lowering (expertise): 30-35 mm; axle load to: 1150 kg HA: lowering (expertise): 25-30 mm; axle load to: 1115 kg
JAGUAR X-TYPE Estate				
B4	**2.0 D, 2.2 D, 2.5, 3.0** 02/04 - 96 -169 kW	**22-053596**	**24-064927**	with standard chassis; front wheel drive
B4	**2.0 D, 2.2 D, 2.5, 3.0** 02/04 - 96 -169 kW	**22-053602**	**24-062657**	with sports suspension; front wheel drive
B4	**2.0 D, 2.2 D, 2.5, 3.0** 02/04 - 96 -169 kW	**22-053619**	**24-062275**	with standard chassis; all-wheel drive
B4	**2.0 D, 2.2 D, 2.5, 3.0** 02/04 - 96 -169 kW	**22-053626**	**24-029810**	with sports suspension; all-wheel drive
B6 Sport	**2.0 D, 2.2 D, 2.5, 3.0** 02/04 - 96 -169 kW	**35-051497**	**24-066761**	front wheel drive
B8	**2.0 D, 2.2 D, 2.5, 3.0** 02/04 - 96 -169 kW	**35-051503**	**24-066778**	front wheel drive
JEEP				
JEEP CJ5 - CJ8				
B4	**2.0, 2.1 D, 2.4 D** 01/83 - 12/87 44 -63 kW	**19-193564**	**19-193564**	
B6 Offroad	**2.0, 2.1 D, 2.4 D, 2.5, 3.8, 4.2, 5.0** 01/76 - 12/83 44 -89 kW	**24-002509**	**24-002608**	

J

JEEP			
JEEP CJ5 - CJ8			
B6 Offroad **3.7, 3.8, 4.2, 5.0** 01/66 - 12/75 74 -110 kW	**24-002509**		
JEEP CHEROKEE (XJ)			
B4 **2.1 TD, 2.5 TD, 4.0 i** 01/88 - 12/90 59 -136 kW		**19-061146**	
B4 **2.1 TD, 2.5 TD, 4.0 i** 01/91 - 59 -136 kW	**19-061153**	**19-061146**	
B4 **2.1 D 4x4, 2.1 TD, 2.5, 2.5 4x4, 2.5 i, 2.5 TD, 2.5 Tdi 4x4, 4.0, 4.0 4x4, 4.0 i** 10/84 - 59 -135 kW	**19-061153**	**19-061146**	
B6 Offroad **2.1 D 4x4, 2.1 TD, 2.5, 2.5 4x4, 2.5 i, 2.5 SE, 2.5 TD, 2.5 Tdi 4x4, 4.0, 4.0 4x4, 4.0 i** 10/86 - 59 -135 kW	**24-017985**	**24-010467**	without ride height adjustment
B6 Offroad **2.1 TD, 2.5 TD, 4.0 i** 10/84 - 64 -136 kW	*24-025782*	**24-025799**	VA: firmer setting HA: firmer setting
B6 Offroad **2.5 TD, 4.0 i** 01/88 - 85 -136 kW	**24-010450**	**24-010467**	without ride height adjustment
JEEP CHEROKEE (KJ)			
B6 Offroad **2.4, 2.4 Laredo, 2.5 CRD, 2.8 CRD, 3.7 Laredo, 3.7 V6** 09/01 - 105 -155 kW	**24-139168**	**24-139175**	
JEEP COMMANDER			
B6 Sport **3.0 CRD, 3.7 V6, 4.7 V8, 5.7 V8** 09/05 - 157 -240 kW	**24-186797**	**24-186803**	
JEEP GRAND CHEROKEE I (Z)			
B4 **2.5 TD, 2.5 TD Laredo, 4.0 i, 4.0 Laredo, 5.2, 5.2 i, 5.9 i** 09/92 - 04/99 85 -177 kW	**19-061153**	**19-061160**	
B6 Offroad **2.5 TD, 2.5 TD Laredo, 4.0 i, 4.0 Laredo, 5.2, 5.2 i, 5.9 i** 09/92 - 04/99 85 -177 kW	**24-017985**	**24-017992**	without ride height adjustment
JEEP GRAND CHEROKEE II (WJ, WG)			
B4 **2.7 CRD 4x4, 2.7 CRD Laredo, 3.1 TD, 3.7 Laredo, 4.0, 4.7, 4.7 V8, 4.7 V8 4x4** 08/00 - 103 -190 kW	**19-128146**	**19-128153**	mark: Europa; without ride height adjustment
B6 Offroad **2.7 CRD 4x4, 2.7 CRD Laredo, 3.1 TD, 3.7 Laredo, 4.0, 4.7, 4.7 V8, 4.7 V8 4x4** 08/00 - 103 -190 kW	**24-061025**	**24-061032**	mark: Europa; without ride height adjustment
B6 Offroad **2.7 CRD 4x4, 2.7 CRD Laredo, 3.1 TD, 3.7 Laredo, 4.0, 4.7, 4.7 V8, 4.7 V8 4x4** 08/00 - 12/04 103 -190 kW	**24-029636**	**24-029643**	Only for United Arab Emirates; without ride height adjustment
JEEP GRAND CHEROKEE III (WH)			
B6 Offroad **3.0 CRD, 3.7 V6, 4.7 V8, 5.7 V8** 06/05 - 157 -240 kW	**24-132725**	**24-132732**	

J

JEEP				
JEEP WRANGLER I (YJ, SJ_)				
B6 Offroad	**2.5, 4.0, 4.2** 08/86 - 08/96 76 -131 kW	**24-013093**	**24-013109**	with leaf-spring suspension
JEEP WRANGLER II (TJ)				
B6 Offroad	**2.4, 2.5, 2.8 CRDi, 3.8, 4.0, 4.0 Rubicon** 08/96 - 87 -153 kW	**24-024426**	**24-024433**	with coil-spring suspension
JEEP WRANGLER III (JK)				
B6 Offroad	**2.8 CRD, 3.8** 04/07 - 130 -147 kW	*24-141727* *24-158428*	*24-141734*	
B8 Offroad	**2.8 CRD, 3.8** 04/07 - 130 -147 kW	*24-146708* *24-158428*	*24-146715*	
KIA				
KIA CARNIVAL II (GQ)				
B4	**2.4, 2.5 V6, 2.7, 2.9 CRDi, 2.9 TD, 3.5** 10/01 - 93 -143 kW		**19-152608**	with ABS
B6 Sport	**2.4, 2.5 V6, 2.7, 2.9 CRDi, 2.9 TD, 3.5** 10/01 - 93 -143 kW		**24-065528**	
KIA CARNIVAL III (VQ)				
B4	**2.7 V6, 2.9 CRDi** 06/06 - 136 -139 kW		**19-152608**	
KIA CEE'D Hatchback (ED)				
B4	**1.4, 1.4 CVVT, 1.6, 1.6 CRDi 115, 1.6 CRDi 90, 2.0, 2.0 CRDi** 12/06 - 66 -105 kW	**22-196408** **22-196415**	**19-197135**	
B4	**1.6 CRDi 128, 1.6 CVVT, 1.4, 1.4 CVVT, 1.6, 1.6 CRDi 115, 1.6 CRDi 128, 1.6 CRDi 90, 1.6 CVVT, 2.0, 2.0 CRDi** 09/07 - 66 -105 kW	**22-196408** **22-196415**	**19-197135**	
KIA JOICE				
B4	**2.0** 02/00 - 88 -102 kW	*22-047823*	*19-063447*	
KIA PRIDE (DA)				
B4	**1.1 i, 1.3, 1.3 16V, 1.3 i, 1.4 LX, 1.5 CRDi LX, 1.6 CVVT LX** 01/96 - 38 -82 kW	*22-047373* *22-047380*		
KIA PRIDE Estate				
B4	**1.3** 08/99 - 47 kW	*22-047373* *22-047380*		
KIA RIO (DC_)				
B4	**1.3, 1.5** 09/00 - 07/02 55 -72 kW	**22-158857** **22-158864**	**19-153681**	
B4	**1.3, 1.5** 08/02 - 02/05 55 -72 kW	**i.V.** **i.V.**	**19-169965**	

J
K

KIA				
KIA RIO Estate (DC)				
B4	**1.3, 1.5** 08/00 - 07/02 55 -72 kW	22-158857 22-158864	**19-153681**	
B4	**1.3, 1.5** 08/02 - 02/05 55 -72 kW	i.V. i.V.	**19-169965**	
KIA RIO II (JB)				
B4	**1.4 16V, 1.5 CRDi, 1.6 16V** 03/05 - 05/05 71 -82 kW	i.V. i.V.	**19-169965**	
KIA RIO II Saloon (JB)				
B4	**1.4 16V, 1.5 CRDi, 1.6 16V** 03/05 - 05/05 71 -82 kW	i.V. i.V.	**19-169965**	
KIA SORENTO (JC)				
B4	**2.4, 2.5 CRDi, 3.5 V6** 08/02 - 11/06 102 -143 kW	*19-152622* *19-152639*	**19-152646**	HA: without ride height adjustment
B4	**2.4, 2.5 CRDi, 3.3 V6, 3.5 V6, 3.8 All-wheel Drive** 12/06 - 102 -196 kW	*19-152622* *19-152639*	**19-173559**	HA: without ride height adjustment
B4	**3.8 All-wheel Drive** 09/06 - 11/06 196 kW		**19-152646**	HA: without ride height adjustment
B6 Offroad	**2.4, 2.5 CRDi, 3.5 V6** 08/02 - 11/06 102 -143 kW	**24-111041**	**24-111058**	HA: without ride height adjustment
B6 Offroad	**2.4, 2.5 CRDi, 3.5 V6** 12/06 - 102 -143 kW	**24-111041**	**24-171472**	HA: without ride height adjustment
B6 Offroad	**3.8 All-wheel Drive** 09/06 - 11/06 196 kW		**24-111058**	HA: without ride height adjustment
B6 Offroad	**3.8 All-wheel Drive** 12/06 - 196 kW		**24-171472**	HA: without ride height adjustment
B6 Offroad	**2.5 CRDi, 3.3 V6** 12/06 - 125 -182 kW	**24-111041**	**24-171472**	HA: without ride height adjustment
KIA SORENTO (XM)				
B6 Offroad	**2.0 CRDi, 2.0 CRDi 4WD, 2.2 CRDi, 2.2 CRDi 4WD, 2.4 16V, 2.4 16V 4WD** 11/09 - 110 -145 kW	**35-191353** **35-191360**	**24-191371**	
KIA SPORTAGE (K00)				
B4	**2.0 4WD, 2.0 i 16V 4WD, 2.0 i 4WD, 2.0 TD 4WD, 2.2 Luxe 4x4** 01/99 - 08/03 52 -94 kW	i.V. i.V.	**19-214634**	with standard chassis
B4	**2.0 i 16V 4WD, 2.0 i 4WD, 2.0 TD 4WD, 2.2 Luxe 4x4** 04/94 - 12/98 52 -94 kW	i.V. i.V.	**19-214634**	with standard chassis
LADA				
LADA 110				
B2	**1.5, 1.5 16V, 1.6, 2.0 i, Wankel** 01/95 - 54 -110 kW	**16-031470**	**15-064462**	
B4	**1.5, 1.5 16V, 1.6, 2.0 i, Wankel** 01/95 - 54 -110 kW	**21-031465**	**19-041193**	VA: for bolted struts only

LADA				
LADA 110				
B4	**1.5, 1.5 16V, 1.6, 2.0 i, Wankel** 03/04 - 54 -110 kW		**19-145686**	
B6 Sport	**1.5, 1.5 16V, 1.6, 2.0 i, Wankel** 01/95 - 54 -110 kW	**34-101803**	**24-101813**	
LADA 111				
B2	**1.5, 1.5 16V, 1.6** 01/95 - 56 -70 kW	**16-031470**	**15-064462**	
B4	**1.5, 1.5 16V, 1.6** 01/95 - 56 -70 kW	**21-031465**	**19-041193**	VA: for bolted struts only
B4	**1.5, 1.5 16V, 1.6** 03/04 - 56 -70 kW		**19-145686**	
B6 Sport	**1.5, 1.5 16V, 1.6** 01/95 - 56 -70 kW	**34-101803**	**24-101813**	
LADA 112				
B2	**1.5, 1.5 16V, 1.6** 01/95 - 54 -70 kW	**16-031470**	**15-064462**	
B4	**1.5, 1.5 16V, 1.6** 01/95 - 54 -70 kW	**21-031465**	**19-041193**	VA: for bolted struts only
B4	**1.5, 1.5 16V, 1.6** 03/04 - 54 -70 kW		**19-145686**	
B6 Sport	**1.5, 1.5 16V, 1.6** 01/95 - 54 -70 kW	**34-101803**	**24-101813**	
LADA 1200-1500 Estate				
B2	**1200, 1300, 1500** 09/73 - 06/85 44 -54 kW	*15-064677*	*19-064666*	
B4	**1200, 1300, 1500** 09/73 - 06/85 44 -54 kW		*19-064666*	
B6 Sport	**1200, 1300, 1500** 09/73 - 06/85 44 -54 kW	**24-004435**	**24-004534**	
B6 Sport	**1200, 1300, 1500** 09/73 - 06/85 44 -54 kW	**24-004473**	**24-004572**	mark: Rallye
LADA 1200-1600				
B2	**1200 L/S, 1300, 1500, 1500 N/S, 1600, 1600 N/L** 01/70 - 10/86 44 -58 kW	*15-064677*	*19-064666*	
B4	**1200 L/S, 1300, 1500, 1500 N/S, 1600, 1600 N/L** 01/70 - 10/86 44 -58 kW		*19-064666*	
B6 Sport	**1200 L/S, 1300, 1500, 1500 N/S, 1600, 1600 N/L** 01/70 - 10/86 44 -58 kW	**24-004435**	**24-004534**	
B6 Sport	**1200 L/S, 1300, 1500, 1500 N/S, 1600, 1600 N/L** 01/70 - 10/86 44 -58 kW	**24-004473**	**24-004572**	mark: Rallye

LADA

LADA NIVA (2121)

B2	**1600, 1700 i, 1700 i 4x4, 1900 Diesel** 12/76 - 47 -60 kW	*15-064677*	*19-064666*	
B4	**1600, 1700 i, 1700 i 4x4, 1900 Diesel** 12/76 - 47 -60 kW		*19-064666*	
B6 Offroad	**1600, 1700 i, 1700 i 4x4, 1900 Diesel** 12/76 - 47 -60 kW	**24-004459**	**24-004534**	
B6 Offroad	**1600** 01/87 - 03/95 54 kW	**24-004473**	**24-004572**	mark: Rallye

LADA NIVA II (2123)

B4	**1.7, 1.7 LPG** 09/02 - 57 -61 kW	**19-135069**	**19-135076**	

LADA NOVA (2105)

B2	**1200 Junior/L, 1300 Spezial/L, 1500 S, 1500 Special, 1600, 1700 i Classic** 05/81 - 44 -62 kW	*15-064677*	*19-064666*	
B4	**1200 Junior/L, 1300 Spezial/L, 1500 S, 1500 Special, 1600, 1700 i Classic** 05/81 - 44 -62 kW		*19-064666*	
B6 Sport	**1200 Junior/L, 1300 Spezial/L, 1500 S, 1500 Special, 1600, 1700 i Classic** 05/81 - 44 -62 kW	**24-004435**	**24-004534**	
B6 Sport	**1200 Junior/L, 1300 Spezial/L, 1500 S, 1500 Special, 1600, 1700 i Classic** 05/81 - 44 -62 kW	**24-004473**	**24-004572**	mark: Rallye

LADA NOVA Estate (2104)

B2	**1300, 1500, 1700** 09/85 - 48 -62 kW	*15-064677*	*19-064666*	
B4	**1300, 1500, 1700** 09/85 - 48 -62 kW		*19-064666*	
B6 Sport	**1300, 1500, 1700** 09/85 - 48 -62 kW	**24-004435**	**24-004534**	
B6 Sport	**1300, 1500, 1700** 09/85 - 48 -62 kW	**24-004473**	**24-004572**	mark: Rallye

LADA SAMARA (2108, 2109)

B2	**1.5, 1100, 1300, 1500** 01/88 - 39 -57 kW	**16-031340** **11-101291** SP	**15-064462**	
B4	**1.5, 1100, 1300, 1500** 01/88 - 39 -57 kW	**21-030550** **11-101291** SP	**19-041193**	
B6 Sport	**1.5, 1100, 1300, 1500** 01/88 - 39 -57 kW	**34-030684**	**24-015110**	

LADA SAMARA FORMA (21099)

B2	**1100, 1300, 1500** 05/89 - 39 -53 kW	**16-031340** **11-101291** SP	**15-064462**	
B4	**1100, 1300, 1500** 05/89 - 39 -53 kW	**21-030550** **11-101291** SP	**19-041193**	

LADA				
LADA SAMARA FORMA (21099)				
B6 Sport	**1100, 1300, 1500** 05/89 - 39 -53 kW	**34-030684**	**24-015110**	
LANCIA				
LANCIA BETA (828_B_)				
B6 Sport	**1300, 1400, 1600, 1800, 2000** 08/73 - 07/82 61 -88 kW		*34-000939*	HA: Quick Repair Service .; Used part return required .
LANCIA BETA H.P.E. (828BF)				
B6 Sport	**1600, 2000, 2000 i.e., 2000 Volumex** 05/76 - 09/84 74 -99 kW		*34-000939*	HA: Quick Repair Service .; Used part return required .
LANCIA DEDRA (835)				
B1	**1.6 16V, 1.6 i.e., 1.6 LE CAT, 1.8 16V LE, 1.8 GT 16V, 1.8 i.e., 1.9 TDS, 2.0 16V, 2.0 i.e., 2.0 i.e. Turbo, 2.0 i.e. Turbo Integrale, 2.0 Turbo** 11/90 - 07/99 55 -130 kW	**12-117550** **12-117567**		VA: with ball bearing
B4	**1.6 16V, 1.6 i.e., 1.6 LE CAT, 1.8 16V LE, 1.8 GT 16V, 1.8 i.e., 1.9 TDS, 2.0 i.e.** 09/89 - 07/99 55 -96 kW	**22-045942** **11-101499** *SP*	**19-019826**	
B6 Sport	**1.6 i.e., 1.8 i.e., 1.9 TDS, 2.0 HF Integrale, 2.0 i.e., 2.0 i.e. Turbo, 2.0 Turbo** 11/90 - 06/94 55 -130 kW	*22-040039*	**24-015714**	HA: firmer setting
B6 Sport	**1.6 16V, 1.6 i.e., 1.6 LE CAT, 1.8 16V LE, 1.8 GT 16V, 1.8 i.e., 1.9 TDS, 2.0 16V, 2.0 i.e., 2.0 i.e. Turbo** 07/94 - 07/99 55 -119 kW	*22-040039*	**24-015714**	HA: firmer setting
B8	**1.6 i.e., 1.8 i.e., 1.9 TDS, 2.0 HF Integrale, 2.0 i.e., 2.0 i.e. Turbo, 2.0 Turbo** 11/90 - 06/94 55 -130 kW	*22-040398*	**24-018005**	
B8	**1.6 16V, 1.6 i.e., 1.6 LE CAT, 1.8 16V LE, 1.8 GT 16V, 1.8 i.e., 1.9 TDS, 2.0 16V, 2.0 i.e., 2.0 i.e. Turbo** 07/94 - 07/99 55 -119 kW	*22-040398*	**24-018005**	
LANCIA DEDRA SW (835)				
B4	**1.6, 1.6 16V, 1.8 16V LE, 1.8 GT 16V, 1.8 i.e., 1.9 TDS, 2.0 16V** 07/94 - 07/99 66 -102 kW	**22-045942** **11-101499** *SP*		
B6 Sport	**1.6, 1.6 16V, 1.8 16V LE, 1.8 GT 16V, 1.8 i.e., 1.9 TDS, 2.0 Integrale, 2.0 16V** 07/94 - 07/99 66 -102 kW	*22-040039*	**24-015714**	HA: firmer setting
B8	**1.6, 1.6 16V, 1.8 16V LE, 1.8 GT 16V, 1.8 i.e., 1.9 TDS, 2.0 Integrale, 2.0 16V** 07/94 - 07/99 66 -102 kW	*22-040398*	**24-018005**	
LANCIA DELTA I (831AB0)				
B1	**1.1, 1.3, 1.5, 1.6 GT, 1.6 GT i.e., 1.6 HF Turbo, 1.8 S4, 1.9 Turbo DS, 2.0 16V HF Evo Integrale, 2.0 16V HF Integrale, 2.0 HF Integrale** 09/85 - 12/92 47 -184 kW	**12-117550** **12-117567**		VA: with ball bearing

L

LANCIA

LANCIA DELTA I (831AB0)

LANCIA DELTA II (836)

B1	**1.4 i.e., 1.6 i.e., 1.6 i.e. 16V, 1.8, 1.8 i.e., 1.8 i.e. 16V, 1.8 i.e. 16V GT, 1.9 TD, 2.0 16V, 2.0 16V Turbo** 06/93 - 09/99 51 -142 kW	**12-117550** **12-117567**		VA: with ball bearing

LANCIA DELTA III (844)

B4	**1.4, 1.4 16V, 1.6 D Multijet, 1.6 MULTIJET, 1.8 Di, 1.9 MULTIJET, 2.0 MULTIJET** 08/08 - 77 -147 kW	i.V. *22-113108*	**19-113098**	VA: fixing hole pitches at the front 58 mm
B6 Sport	**1.4, 1.4 16V, 1.6 D Multijet, 1.6 MULTIJET, 1.8 Di, 2.0 MULTIJET** 08/08 - 77 -147 kW	i.V. *22-158901*	**24-067911**	VA: fixing hole pitches at the front 58 mm
B6 Sport	**1.9 MULTIJET** 01/09 - 140 kW	**35-156338**	**24-067911**	VA: fixing hole pitches at the front 75 mm
B8	**1.4, 1.4 16V, 1.6 D Multijet, 1.6 MULTIJET, 1.8 Di, 2.0 MULTIJET** 08/08 - 77 -147 kW	i.V. *22-158918*	**24-067928**	VA: fixing hole pitches at the front 58 mm
B8	**1.9 MULTIJET** 01/09 - 140 kW	**35-156345**	**24-067928**	VA: fixing hole pitches at the front 75 mm
B14	**1.4, 1.4 16V, 1.6 D Multijet, 1.6 MULTIJET, 1.8 Di** 08/08 - 77 -147 kW	**47-158993**		fixing hole pitches at the front 58 mm; Conditions see certificates VA: lowering (expertise): 30-40 mm HA: lowering (expertise): 25-40 mm

L

LANCIA MUSA (350)

B3	**1.4** 10/04 - 57 -70 kW	**36-201563**	36-219506	with standard chassis
B3	**1.3 Multijet** 10/04 - 51 -66 kW	**36-201686**	36-219506	with standard chassis
B4	**1.3 D Multijet, 1.3 Multijet, 1.4, 1.4 LPG, 1.6 D Multijet, 1.9 Multijet** 10/04 - 51 -88 kW	22-166432	**19-158693**	

LANCIA PHEDRA (179)

B4	**2.0, 2.0 JTD, 2.2 JTD, 3.0 V6** 09/02 - 79 -150 kW	**22-128225** **22-139122**	**19-128238**	

LANCIA THEMA (834)

B3	**2000 16V** 08/92 - 12/93 112 kW	36-219605	36-219612	with standard chassis; without ride height adjustment
B3	**2000 16V** 05/92 - 07/94 112 kW	36-219605	36-202157	with standard chassis; with ride height adjustment
B3	**2000 16V Turbo** 10/92 - 07/94 148 kW		36-202157	with standard chassis; with ride height adjustment
B4	**2000 i.e., 2000 i.e. Turbo, 2000 i.e.Turbo, 2500 Turbo D, 2850 V6 i.e.** 11/86 - 05/90 74 -122 kW	*22-046772*	*22-046789* **11-101383** SP	
B4	**2000 16V, 2000 16V Turbo, 2000 i.e, 2000 i.e., 2000 i.e. 16V, 2000 i.e. 16V Turbo, 2500 Turbo DS, 2850 V6 i.e.** 06/88 - 07/94 77 -148 kW	*22-046772*	*22-046789* **11-101383** SP	

LANCIA				
LANCIA THEMA SW (834)				
B3	**2000 16V** 05/92 - 07/94 112 kW	36-219605	36-219612	with standard chassis; without ride height adjustment
LANCIA THESIS (841AX)				
B3	**2.0 Turbo, 2.4, 2.4 JTD, 2.4 Multijet, 3.0 V6, 3.2 V6** 07/02 - 110 -169 kW	**36-201051**	**36-225378**	with standard chassis
LANCIA Y10 (156)				
B3	**1.0 Fire, 1.0 Fire CAT, 1.1 i.e. Fire** 03/85 - 09/95 32 -41 kW	**36-160624**	**36-160570**	with standard chassis
B3	**1.3 i.e. Fire** 11/87 - 12/95 53 -56 kW	**36-160600**	**36-160556**	with standard chassis
B4	**1.0 Fire, 1.0 Fire CAT, 1.0 Turbo, 1.1 i.e** 03/85 - 06/92 32 -62 kW	**22-046390** **22-045478** **11-101338** SP	**19-019833** OIO	
B4	**1.0 Fire 4WD, 1.1 Avenue 4WD, 1.1 i.e 4WD, 1.1 i.e. Fire 4WD** 12/86 - 12/95 32 -42 kW	**22-046390** **22-045478**		
B4	**1.1 i.e. Fire, 1.3 i.e. Fire** 11/87 - 12/92 37 -56 kW	**22-046390** **22-045478** **11-101338** SP	**19-019833** OIO	
B4	**1.1 i.e. Fire, 1.3 i.e. Fire** 01/93 - 12/95 37 -56 kW	**22-046390** **22-045478** **11-101338** SP		
B4	**1.1 Avenue** 01/95 - 12/95 40 kW	**22-046390** **22-045478** **11-101338** SP		
LANCIA YPSILON (843)				
B3	**1.2** 10/03 - 44 kW	**36-200856**	36-219353	with standard chassis; with AC
B3	**1.2, 1.4** 10/03 - 57 -70 kW	**36-200856**	36-219353	with standard chassis
B3	**1.3 JTD, 1.3 Multijet** 10/03 - 51 -66 kW	**36-200863**	36-219353	with standard chassis
B4	**1.2, 1.3 JTD, 1.3 Multijet, 1.4, 1.4 LPG** 10/03 - 44 -77 kW		**19-158884** OIO	with standard chassis
LANCIA ZETA (220)				
B1	**2.0 16V, 2.0 JTD, 2.0 Turbo, 2.1 TD** 05/96 - 09/02 80 -108 kW	**12-117505**		VA: with ball bearing
B4	**2.0 16V, 2.0 JTD, 2.0 Turbo, 2.1 TD** 05/96 - 09/02 80 -108 kW	**22-046734**	**19-061054** OIO	
LAND ROVER				
LAND ROVER 90/110 (DHMC)				
B4	**2.3 4x4, 2.3 D 4x4, 2.5, 2.5 County 4x4, 2.5 TD, 3.5 V8** 09/83 - 07/90 46 -100 kW	**19-061177** **19-061207**	**19-061191**	without pneumatic suspension

L

LAND ROVER				
LAND ROVER 90/110 (DHMC)				
B4	**2.3 4x4, 2.3 D 4x4, 2.5, 2.5 County 4x4, 2.5 TD, 3.5 V8** 09/83 - 07/90 46 -100 kW	**19-216980** **19-061207**	**19-217000**	mark: Heavy Duty
B6 Offroad	**2.3 4x4, 2.3 D 4x4, 2.5, 2.5 County 4x4, 2.5 TD, 3.5 V8** 09/83 - 07/90 46 -100 kW	**24-002431** **24-022354**	**24-002530**	
LAND ROVER DEFENDER Station Wagon (LD)				
B4	**2.5 90,110 TDI, 2.5 County 4x4, 2.5 D 4x4, 3.5 4x4, 3.5 4x4, 3.9 4x4** 09/90 - 12/98 51 -134 kW	**19-061177** **19-061207**	**19-061191**	twin-tube
B6 Offroad	**2.2 Td4, 2.4 Td4** 05/07 - 90 kW	**24-065405**	**24-065290**	
B6 Offroad	**2.5 90,110 TDI, 2.5 County 4x4, 2.5 D 4x4, 3.5 4x4, 3.5 4x4, 3.9 4x4** 09/90 - 09/00 51 -134 kW	**24-002431** **24-022354**	**24-002530**	mono-tube
B6 Offroad	**2.5 Td5 4WD, 3.9 V8** 01/99 - 90 -136 kW	**24-065405**	**24-065290**	CH.Nr.: XA- ->
LAND ROVER DEFENDER (LD)				
B4	**2.5 90 TDI, 2.5 D 4x4, 2.5 Td5 4WD, 3.5 4x4, 3.9 4x4** 09/90 - 12/98 51 -134 kW	**19-061177** **19-061207**	**19-061191**	
B4	**2.5 90 TDI, 2.5 D 4x4, 2.5 Td5 4WD, 3.5 4x4, 3.9 4x4** 09/90 - 12/98 51 -134 kW	**19-216980** **19-061207**	**19-217000**	mark: Heavy Duty
B6 Offroad	**2.2 Td4, 2.4 Td4, 2.5 90 TDI, 2.5 D 4x4, 2.5 Td5 4WD, 3.9 4x4** 01/99 - 51 -134 kW	**24-065405**	**24-065290**	
B6 Offroad	**2.5 90 TDI, 2.5 D 4x4, 2.5 Td5 4WD, 3.5 4x4, 3.9 4x4** 09/90 - 12/98 51 -134 kW	**24-002431** **24-022354**	**24-002530**	
LAND ROVER DEFENDER Pickup (LD_)				
B6 Offroad	**2.2 Td4, 2.4 Td4, 2.5 Td5 4WD, 2.8 All-wheel Drive, 3.9 4x4** 04/98 - 90 -140 kW	**24-002431** **24-022354**	**24-002530**	mono-tube
LAND ROVER DISCOVERY I (LJ, LG)				
B4	**2.0 16 V, 2.5 TDI, 3.5, 3.9 V8** 10/89 - 10/98 83 -134 kW	**19-061177** **19-061207**	**19-061184**	twin-tube
B6 Offroad	**2.0 16 V, 2.5 TDI, 3.5, 3.9 V8** 10/89 - 10/98 83 -134 kW	**24-002431** **24-002455**	**24-002530**	mono-tube
LAND ROVER DISCOVERY II (LJ, LT)				
B4	**4.0 V8** 11/98 - 12/98 136 kW	**19-061177** **19-061207**	**19-061191**	twin-tube; without pneumatic suspension
B6 Offroad	**2.5 Td5, 4.0 V8** 11/98 - 06/04 102 -136 kW	**24-060462** **24-105804**	**24-060479**	without pneumatic suspension
LAND ROVER DISCOVERY III (TAA)				
B6 Offroad	**2.7 TD, 4.0 4x4, 4.0 V6 4x4, 4.4, 2.7 TD, 3.0 SDV6, 3.0 TD, 4.0 4x4, 5.0 V8** 07/04 - 140 -276 kW	**24-136709**	**24-136716**	not for: ACE; Only in connection with RAE500010; with air suspension

L

LAND ROVER

LAND ROVER RANGE ROVER I (AE, AN, HAA, HAB, HAM, HBM, RE, RN)

B4	**2.4 Diesel, 2.4 TD Classic 4x4, 2.5 TD 4x4, 2.5 TDi 4x4, 3.5, 3.5 Vogue, 3.9 CAT, 3.9 Vogue SEI, 4.3 Vogue LSE** 10/85 - 07/94 78 -149 kW	**19-061177** **19-061207**	**19-061184**	twin-tube; without pneumatic suspension
B6 Offroad	**2.4 Diesel, 2.4 TD Classic 4x4, 2.5 TD 4x4, 2.5 TDi 4x4, 3.5, 3.5 Vogue, 3.9 CAT, 3.9 Vogue SEI, 4.3 Vogue LSE** 10/85 - 07/94 78 -149 kW	**24-002431** **24-002455**	**24-002530**	mono-tube; without pneumatic suspension
B6 Offroad	**2.4 Diesel, 2.4 TD Classic 4x4, 2.5 TD 4x4, 2.5 TDi 4x4, 3.5, 3.5 Vogue, 3.9 CAT, 3.9 Vogue SEI, 4.3 Vogue LSE** 10/85 - 07/94 78 -149 kW	**24-021531**	**24-021524**	with air suspension
B6 Offroad	**2.4 Diesel, 2.4 TD Classic 4x4, 2.5 TD 4x4, 2.5 TDi 4x4, 3.5, 3.5 Vogue, 3.9 CAT, 3.9 Vogue SEI, 4.3 Vogue LSE** 10/85 - 07/94 78 -149 kW	**24-002431**		mark: Komfort; without pneumatic suspension

LAND ROVER RANGE ROVER II (LP)

B4	**2.5 D, 3.9, 4.0, 4.6** 07/94 - 03/02 83 -165 kW	**19-061177** **19-061207**	**19-061184**	twin-tube; without pneumatic suspension
B6 Offroad	**2.5 D, 3.9, 4.0, 4.6** 07/94 - 03/02 83 -165 kW	**24-022149**	**24-022156**	with air suspension
B6 Offroad	**2.5 D, 3.9, 4.0, 4.6** 07/94 - 03/02 83 -165 kW	**24-021531** **24-002455**	**24-002530**	mono-tube; without pneumatic suspension

LAND ROVER RANGE ROVER III (LM)

B4	**3.0 Td 6, 3.6 TD 8, 4.2, 4.4, 5.0 V8** 03/02 - 130 -375 kW		**44-124748**	without electronic suspension control; with air suspension
B4	**3.0 Td 6, 3.6 TD 8, 4.2, 4.4, 5.0 V8** 03/02 - 130 -375 kW		**44-191177**	without electronic suspension control; mark: Supercharged; with air suspension

LAND ROVER RANGE ROVER SPORT (LS)

B4 DTC	**2.7 TDVM, 3.6 TD 8, 4.2, 4.4** 02/05 - 140 -287 kW	**20-146078**	**20-146085** **20-146092**	with electronic suspension control; with air suspension
B6 Offroad	**2.7 TDVM, 3.6 TD 8, 4.2, 4.4** 02/05 - 140 -287 kW	**24-141352**	**24-141369**	not for: ACE; Only in connection with RAE500010; with air suspension

JIANGLING LANDWIND

JIANGLING LANDWIND LANDWIND

B4	**2.0, 2.4, 2.8 D** 09/05 - 68 -92 kW	**19-028897**	**19-028903**	
B6 Offroad	**2.0, 2.4, 2.8 D** 09/05 - 68 -92 kW	**24-016766**	**24-016773**	

LEXUS

LEXUS ES (F1, F2)

B6 Sport	**300** 09/91 - 12/97 138 kW	**24-018692**	**24-018708**	

LEXUS			
LEXUS GS (JZS147)			
B6 Sport **300** 03/93 - 08/97 156 kW	**24-018692** VO	**24-018708** VL	with standard chassis; without electronic suspension control
B8 **300** 03/93 - 08/97 156 kW	**24-020251** VO	**24-020268** VL	with sports suspension; without electronic suspension control
LEXUS GS (JZS160)			
B4 **300, 300 T3** 08/97 - 03/05 161 -163 kW	*19-214221* VO	**19-214405** VO	with standard chassis; without pneumatic suspension
B6 Sport **300, 300 T3, 400, 430** 12/97 - 03/05 161 -216 kW	**24-027434** VO	**24-027441** VO	
B8 **300, 300 T3, 400, 430** 12/97 - 03/05 161 -216 kW	**24-028028** VO	**24-028035** VO	
B14 **300, 300 T3, 400, 430** 12/97 - 03/05 161 -216 kW	*47-083011*		Without roadworthy certificate; axle strut housing with external thread M52x1,5; without electronic suspension control VA: lowering (expertise): 45 mm HA: lowering (expertise): 45 mm
LEXUS IS (GXE10)			
B6 Sport **200, 300** 04/99 - 114 -157 kW	**24-060486** VO	**24-060493** VO	
LEXUS IS SportCross			
B4 **200, 300** 10/01 - 114 -157 kW	**i.V.** VO	**19-168388** VO	with standard chassis
B6 Sport **200, 300** 10/01 - 114 -157 kW	**24-060486** VO	**24-060493** VO	
LEXUS IS (_XE2_)			
B6 Sport **IS F** 03/08 - 311 kW	**24-155311** VO ↰ **24-155328** VO ↱	**24-155335** VO	
LEXUS LS (UCF10)			
B8 **400** 12/89 - 12/94 180 kW	*24-017831* VO	*24-017848* VO	with lowered chassis; mark: Bilstein VA: Only in connection with Z128A00 HA: Only in connection with Z129A00
LEXUS LS (UCF20)			
B6 Sport **4.0, 400** 09/97 - 194 -216 kW	**24-027342** VO	**24-027359** VO	
LEXUS LS (FE)			
B14 **430** 10/00 - 207 kW	**47-086401**		Without roadworthy certificate; mark: UCF30 VA: lowering (expertise): 35 mm HA: lowering (expertise): 35 mm
LINCOLN			
LINCOLN CONTINENTAL TOWN CAR			
B6 Sport **4.6, 4.6 Signature** 01/94 - 157 -209 kW	*24-184731*	**24-184755**	mark: Komfort
B6 Sport **4.6, 4.6 Signature** 01/94 - 157 -209 kW	*24-184724*	**24-184748**	mark: Heavy Duty

LINCOLN

LOTUS

LOTUS ELISE

B16 PSS10	**1.8, 1.8 111R, 1.8 111S, 1.8 GLX, 1.8, 1.8 16V, 1.8 265 E, 1.8 Cup 240** 09/01 - 99 -197 kW	**48-136723**		mark: Toyota Engine; Conditions see certificates VA: lowering (expertise): 0-10 mm; axle load to: 485 kg HA: lowering (expertise): 0-20 mm; axle load to: 760 kg

MAHINDRA RENAULT

MAHINDRA RENAULT LOGAN

B3	**1.4, 1.5 D, 1.6 CNG** 04/07 - 48 -63 kW	**36-160433**	**36-160181**	with standard chassis
B3	**1.4, 1.5 D, 1.6 CNG** 04/07 - 48 -63 kW	**36-160150**		with standard chassis; Heavy Duty Version .
B4	**1.4, 1.5 D, 1.6 CNG** 04/07 - 48 -63 kW	**22-122469**	**19-122472**	
B8	**1.4, 1.5 D, 1.6 CNG** 04/07 - 48 -63 kW	**22-140388**	**19-140391**	
B12 PK	**1.4, 1.5 D, 1.6 CNG** 04/07 - 48 -63 kW	**46-189387**		Conditions see certificates VA: lowering (expertise): 35 mm; axle load to: 930 kg HA: lowering (expertise): 35 mm; axle load to: 880 kg

MAHINDRA RENAULT VERITO

B3	**1.4, 1.5 D** 03/11 - 48 -56 kW	**36-160433**	**36-160181**	with standard chassis
B3	**1.4, 1.5 D** 03/11 - 48 -56 kW	**36-160150**		with standard chassis; Heavy Duty Version .
B4	**1.4, 1.5 D** 03/11 - 48 -56 kW	**22-122469**	**19-122472**	
B8	**1.4, 1.5 D** 03/11 - 48 -56 kW	**22-140388**	**19-140391**	
B12 PK	**1.4, 1.5 D** 03/11 - 48 -56 kW	**46-189387**		Conditions see certificates VA: lowering (expertise): 35 mm; axle load to: 930 kg HA: lowering (expertise): 35 mm; axle load to: 880 kg

MARUTI SUZUKI

MARUTI SUZUKI SWIFT

B4	**1.2, 1.3 D** 01/04 - 55 -63 kW	**22-166722** **22-166739**	**19-156545**	
B14	**1.2** 01/04 - 63 kW	**47-167551**		mark: EZ/ MZ; Conditions see certificates VA: lowering (expertise): 10-30 mm; axle load to: 830 kg HA: lowering (expertise): 0-20 mm; axle load to: 830 kg
B14	**1.3 D** 01/07 - 55 kW	**47-167551**		Conditions see certificates VA: lowering (expertise): 10-30 mm; axle load to: 830 kg HA: lowering (expertise): 0-20 mm; axle load to: 830 kg

MAZDA

MAZDA 121 I (DA)

B4	**1.1, 1.3, 1.5** 10/87 - 11/90 40 -56 kW	*22-047373* *22-047380*	*19-063300*	

L

M

MAZDA				
MAZDA 121 II (DB)				
B4	**1.1, 1.3 16V, 1.5** 03/91 - 05/97 39 -62 kW	*22-047397*	*19-063324*	without ABS
B4	**1.1, 1.3 16V, 1.5** 11/90 - 05/97 39 -62 kW		*19-063324*	with ABS
MAZDA 121 III (JASM, JBSM)				
B1	**1.25, 1.3** 03/96 - 09/98 37 -55 kW	**12-117161**		VA: with ball bearing
B4	**1.25, 1.3** 03/96 - 09/98 37 -55 kW	**22-045546** **11-101468** SP	**19-029306** **11-105886** SP	
B4	**1.25, 1.3** 10/98 - 37 -55 kW	**22-045546** **11-101468** SP	**19-104089** **11-105886** SP	
B4	**1.8 D** 03/96 - 09/98 44 kW	**22-045553** **11-101468** SP	**19-029306** **11-105886** SP	
B4	**1.8 D** 10/98 - 44 kW	**22-045553** **11-101468** SP	**19-104089** **11-105886** SP	
MAZDA 2 (DY)				
B1	**1.25, 1.4, 1.4 CD, 1.6** 04/03 - 50 -74 kW	**12-224340**		VA: with ball bearing
B3	**1.2, 1.25, 1.3 L, 1.4, 1.4 CD, 1.5, 1.6** 02/03 - 50 -82 kW	**36-216178**	**36-214938**	with standard chassis
B4	**1.25, 1.4, 1.4 CD, 1.6** 04/03 - 50 -74 kW	**22-111760** **22-111777**	**19-111780**	
B6 Sport	**1.25, 1.4, 1.4 CD, 1.6** 04/03 - 50 -74 kW	**35-103547** **35-103554**	**24-103565**	with standard chassis; with sports suspension
B8	**1.25, 1.4, 1.4 CD, 1.6** 04/03 - 50 -74 kW	**35-103578** **35-103585**	**24-103596**	with standard chassis; with sports suspension
MAZDA 2 (DE)				
B3	**1.3, 1.5** 10/07 - 55 -76 kW	**36-216208**	**36-216222**	with standard chassis
B3	**1.3, 1.5** 10/07 - 55 -76 kW	**36-216215**	**36-216222**	with standard chassis; Heavy Duty Version .
B3	**1.4 MZR, 1.6 MZ-CD** 01/08 - 50 -66 kW	**36-216215**	**36-216222**	with standard chassis
B4	**1.3, 1.4 MZR, 1.5, 1.6 MZ-CD** 10/07 - 50 -76 kW	**i.V.** **i.V.**	**24-188654**	
B14	**1.3, 1.4 MZR, 1.5, 1.6 MZ-CD** 10/07 - 50 -76 kW	**47-167490**		Conditions see certificates VA: lowering (expertise): 25-40 mm; axle load to: 850 kg HA: lowering (expertise): 20-40 mm; axle load to: 765 kg
MAZDA 323 II Hatchback (BD)				
B3	**1.3, 1.5, 1.6** 11/80 - 03/87 44 -65 kW	**36-161096**	**36-161041**	with standard chassis
MAZDA 323 II (BD)				
B3	**1.1, 1.3, 1.5, 1.6 GLX** 11/80 - 03/87 40 -65 kW	**36-161096**	**36-161041**	with standard chassis

M

MAZDA

MAZDA 323 III Station Wagon (BW)

B3	**1.5, 1.6, 1.7 D** 05/86 - 10/89 40 -63 kW		*36-160884*	with standard chassis

MAZDA 323 C IV (BG)

B3	**1.3, 1.3 16V, 1.6, 1.6 16V, 1.7 D, 1.8 16V GT** 08/89 - 10/94 41 -94 kW	**36-130627**	**36-130634**	with standard chassis
B4	**1.3, 1.3 16V** 09/89 - 07/94 49 -54 kW	*22-047441*	*22-048912*	with off-road suspension
B4	**1.3, 1.3 16V** 09/89 - 07/94 49 -54 kW	*22-047441*	*22-048936*	without off-road suspension
B4	**1.6** 09/89 - 06/91 62 kW	*22-047441*	*22-048912*	with off-road suspension
B4	**1.6** 09/89 - 06/91 62 kW	*22-047441*	*22-048936*	without off-road suspension
B4	**1.6 16V** 03/91 - 10/94 65 kW	*22-047441*	*22-048912*	with off-road suspension
B4	**1.6 16V** 03/91 - 10/94 65 kW	*22-047441*	*22-048936*	without off-road suspension
B4	**1.8 16V 4WD** 11/91 - 12/93 76 kW	*22-047410* *22-047427*		
B4	**1.8 16V GT** 09/89 - 03/93 94 kW	*22-047441*	*22-048912*	with off-road suspension
B4	**1.8 16V GT** 09/89 - 03/93 94 kW	*22-047441*	*22-048936*	without off-road suspension
B4	**1.8 16V Turbo 4WD** 09/90 - 12/92 120 kW	*22-047410* *22-047427*		
B4	**1.7 D** 08/89 - 07/94 41 kW	*22-047441*	*22-048912*	with off-road suspension
B4	**1.7 D** 08/89 - 07/94 41 kW	*22-047441*	*22-048936*	without off-road suspension

MAZDA 323 F IV (BG)

B3	**1.6, 1.6 16V, 1.8 16V, 1.8 16V GT** 08/89 - 07/94 62 -94 kW	**36-130627**	**36-130634**	with standard chassis
B4	**1.6, 1.6 16V, 1.8 16V, 1.8 16V GT** 08/89 - 07/94 62 -94 kW		*22-048912*	with off-road suspension
B4	**1.6, 1.6 16V, 1.8 16V, 1.8 16V GT** 08/89 - 07/94 62 -94 kW		*22-048936*	without off-road suspension

MAZDA 323 S IV (BG)

B3	**1.3, 1.3 16V, 1.6, 1.6 16V, 1.7 D, 1.8 16V** 08/89 - 07/94 41 -76 kW	**36-130627**	**36-130634**	with standard chassis
B4	**1.3, 1.3 16V** 09/89 - 07/94 49 -54 kW	*22-047441*	*22-048912*	with off-road suspension
B4	**1.3, 1.3 16V** 09/89 - 07/94 49 -54 kW	*22-047441*	*22-048936*	without off-road suspension

MAZDA				
MAZDA 323 S IV (BG)				
B4	**1.6, 1.6 16V** 08/89 - 10/94 62 -65 kW	*22-047441*	*22-048912*	with off-road suspension
B4	**1.6, 1.6 16V** 08/89 - 10/94 62 -65 kW	*22-047441*	*22-048936*	without off-road suspension
B4	**1.8 16V** 08/89 - 07/94 76 kW	*22-047441*	*22-048912*	with off-road suspension
B4	**1.8 16V** 08/89 - 07/94 76 kW	*22-047441*	*22-048936*	without off-road suspension
B4	**1.7 D** 08/89 - 07/94 41 kW	*22-047441*	*22-048912*	with off-road suspension
B4	**1.7 D** 08/89 - 07/94 41 kW	*22-047441*	*22-048936*	without off-road suspension
MAZDA 323 P V (BA)				
B3	**1.3 16V** 10/96 - 54 kW	**36-212705**	**36-200887**	with standard chassis
B3	**1.3 16V** 10/96 - 54 kW	**36-201631**		with standard chassis; Heavy Duty Version .
B3	**1.5 16V** 10/96 - 65 kW	**36-212705**	**36-200887**	with standard chassis; manual transmission
B3	**1.5 16V** 10/96 - 65 kW	**36-201631**		with standard chassis; Heavy Duty Version .; manual transmission
B3	**1.5 16V** 10/96 - 65 kW	**36-201631**	**36-212712**	with standard chassis; automatic transmission
B3	**1.5 16V** 10/96 - 65 kW	**36-200979**		with standard chassis; Heavy Duty Version .; automatic transmission
B3	**2.0 D** 10/96 - 52 kW	**36-200979**	**36-200887**	with standard chassis
B4	**1.3 16V, 1.5 16V, 2.0 D** 10/96 - 52 -65 kW	*22-047472* *22-047489*		
MAZDA 323 C V (BA)				
B3	**1.3 16V** 08/94 - 09/98 54 kW	**36-212705**	**36-200887**	with standard chassis
B3	**1.3 16V** 08/94 - 09/98 54 kW	**36-201631**		with standard chassis; Heavy Duty Version .
B3	**1.5 16V, 1.8, 1.8 16V, 2.0** 08/94 - 09/98 65 -104 kW	**36-212705**	**36-200887**	with standard chassis; manual transmission
B3	**1.5 16V, 1.8, 1.8 16V, 2.0** 08/94 - 09/98 65 -104 kW	**36-201631**		with standard chassis; Heavy Duty Version .; manual transmission
B3	**1.5 16V, 1.8, 1.8 16V, 2.0** 08/94 - 09/98 65 -104 kW	**36-201631**	**36-212712**	with standard chassis; automatic transmission
B3	**1.5 16V, 1.8, 1.8 16V, 2.0** 08/94 - 09/98 65 -104 kW	**36-200979**		with standard chassis; Heavy Duty Version .; automatic transmission
B4	**1.3 16V, 1.5 16V, 1.8 16V** 08/94 - 09/98 54 -84 kW	*22-047472* *22-047489*		without ABS
B4	**1.3 16V, 1.5 16V, 1.8 16V** 08/94 - CH-Nr. 54 -84 kW		*22-048967* *22-048974*	-> CH.Nr.: 151007; with ABS

MAZDA

MAZDA 323 C V (BA)

B4	**1.3 16V, 1.5 16V, 1.8 16V** CH-Nr. - 09/98 54 -84 kW	*22-047472* *22-047489*		CH.Nr.: 151008 ->; with ABS

MAZDA 323 F V (BA)

B3	**1.5 16V, 1.8 16V, 2.0 24V** 07/94 - 09/98 65 -106 kW	**36-212705**	**36-200887**	with standard chassis; manual transmission
B3	**1.5 16V, 1.8 16V, 2.0 24V** 07/94 - 09/98 65 -106 kW	**36-201631**		with standard chassis; Heavy Duty Version .; manual transmission
B3	**1.5 16V, 1.8 16V, 2.0 24V** 07/94 - 09/98 65 -106 kW	**36-201631**	**36-212712**	with standard chassis; automatic transmission
B3	**1.5 16V, 1.8 16V, 2.0 24V** 07/94 - 09/98 65 -106 kW	**36-200979**		with standard chassis; Heavy Duty Version .; automatic transmission
B4	**1.5 16V** 07/94 - 09/98 65 kW	*22-047472* *22-047489*		without ABS
B4	**1.5 16V** 07/94 - CH-Nr. 65 kW		*22-048967* *22-048974*	-> CH.Nr.: 151007; with ABS
B4	**1.5 16V** CH-Nr. - 09/98 65 kW	*22-047472* *22-047489*		CH.Nr.: 151008 ->; with ABS
B4	**1.8 16V** 08/94 - 09/98 84 kW	*22-047472* *22-047489*		without ABS
B4	**1.8 16V** 08/94 - CH-Nr. 84 kW		*22-048967* *22-048974*	-> CH.Nr.: 151007; with ABS
B4	**1.8 16V** CH-Nr. - 09/98 84 kW	*22-047472* *22-047489*		CH.Nr.: 151008 ->; with ABS
B4	**2.0 24V** 08/94 - 09/98 106 kW	*22-047656* *22-047663*	*22-049070* *22-049087*	without ABS
B4	**2.0 24V** 08/94 - CH-Nr. 106 kW	*22-047670* *22-047687*	*22-049094* *22-049100*	-> CH.Nr.: 151007; with ABS
B4	**2.0 24V** CH-Nr. - 09/98 106 kW	*22-047656* *22-047663*	*22-049070* *22-049087*	CH.Nr.: 151008 ->; with ABS

MAZDA 323 S V (BA)

B3	**1.3 16V** 08/94 - 09/98 54 kW	**36-212705**	**36-200887**	with standard chassis
B3	**1.3 16V** 08/94 - 09/98 54 kW	**36-201631**		with standard chassis; Heavy Duty Version .
B3	**1.5 16V, 1.6** 08/94 - 09/98 65 -80 kW	**36-212705**	**36-200887**	with standard chassis; manual transmission
B3	**1.5 16V, 1.6** 08/94 - 09/98 65 -80 kW	**36-201631**		with standard chassis; Heavy Duty Version .; manual transmission
B3	**1.5 16V, 1.6** 08/94 - 09/98 65 -80 kW	**36-201631**	**36-212712**	with standard chassis; automatic transmission
B3	**1.5 16V, 1.6** 08/94 - 09/98 65 -80 kW	**36-200979**		with standard chassis; Heavy Duty Version .; automatic transmission
B3	**1.6 TD, 1.8, 1.8 16V, 2.0** 05/94 - 09/98 60 -98 kW	**36-201631**	**36-212712**	with standard chassis
B3	**1.6 TD, 1.8, 1.8 16V, 2.0** 05/94 - 09/98 60 -98 kW	**36-200979**		with standard chassis; Heavy Duty Version .

M

MAZDA				
MAZDA 323 S V (BA)				
B3	**2.0 D** 10/96 - 09/98 52 kW	**36-200979**	**36-200887**	with standard chassis
B4	**1.3 16V, 1.5 16V, 1.6 TD, 1.8 16V** 05/94 - 09/98 54 -84 kW	*22-047472* *22-047489*		without ABS
B4	**1.3 16V, 1.5 16V, 1.6 TD, 1.8 16V** 05/94 - CH-Nr. 54 -84 kW		*22-048967* *22-048974*	-> CH.Nr.: 151007; with ABS
B4	**1.3 16V, 1.5 16V, 1.6 TD, 1.8 16V** CH-Nr. - 09/98 54 -84 kW	*22-047472* *22-047489*		CH.Nr.: 151008 ->; with ABS
B4	**2.0 D** 10/96 - 09/98 52 kW	*22-047472* *22-047489*		
MAZDA 323 F VI (BJ)				
B3	**1.6** 11/00 - 05/04 70 -72 kW	**36-200900**		with standard chassis; manual transmission
B3	**1.8 Astina, 1.9 16V, 2.0** 11/00 - 05/04 84 -96 kW	**36-200900**		with standard chassis
B3	**2.0 D, 2.0 TD** 09/98 - 10/00 52 -66 kW	**36-200900**		with standard chassis
MAZDA 323 S VI (BJ)				
B3	**1.4 16V, 1.5, 1.5 16V, 1.6, 1.9 16V** 05/98 - 10/00 54 -84 kW		**36-214891**	with standard chassis
B3	**1.6, 2.0, 2.0 Astina** 02/00 - 05/04 70 -98 kW	**36-201464**		with standard chassis; manual transmission
B3	**1.6** 09/98 - 05/04 70 -80 kW	**36-201464**	**36-214891**	with standard chassis; automatic transmission
B3	**1.9 16V** 11/00 - 05/04 84 kW	**36-200900**		with standard chassis
B3	**2.0, 2.0 Astina** 02/00 - 05/04 96 -98 kW	**36-200900**		with standard chassis; automatic transmission
B3	**2.0 Astina, 2.0 D, 2.0 DiTD, 2.0 TD** 09/98 - 10/00 52 -98 kW	**36-200900**	**36-214891**	with standard chassis
MAZDA 3 (BK)				
B1	**1.4, 1.6, 1.6 DI Turbo, 2.0, 2.0 MZR-CD, 2.3 DiSi Turbo MPS, 2.3 MPS, 2.3 MZR, 2.3 MZR Sport** 10/03 - 59 -191 kW	**12-224166**		VA: -> 11/08
B3	**1.4, 1.6** 10/03 - 59 -77 kW	**36-214907**	**36-200894**	with standard chassis
B3	**2.0** 10/03 - 104 -110 kW		**36-200894**	with standard chassis
B3	**1.6 DI Turbo** 06/04 - 80 kW	**36-214921**	**36-200894**	with standard chassis
B4	**1.4, 1.6, 1.6 DI Turbo, 2.0, 2.0 MZR-CD, 2.3 MZR** 10/03 - 59 -115 kW	**22-112811** **22-112880**	**19-112893**	with standard chassis

MAZDA

MAZDA 3 (BK)

B6 Sport	**1.4, 1.6, 1.6 DI Turbo, 2.0, 2.0 MZR-CD, 2.3 DiSi Turbo MPS, 2.3 MPS, 2.3 MZR, 2.3 MZR Sport** 10/03 - 59 -191 kW	**35-110736** **35-110743**	**24-215220**	
B8	**1.4, 1.6, 1.6 DI Turbo, 2.0, 2.0 MZR-CD, 2.3 DiSi Turbo MPS, 2.3 MPS, 2.3 MZR, 2.3 MZR Sport** 10/03 - 59 -191 kW	**35-110767** **35-110774**	**24-215237**	
B12 PK	**1.4, 1.6, 2.0** 10/03 - 59 -110 kW	**46-190307**		Conditions see certificates VA: lowering (expertise): 30 mm; axle load to: 955 kg HA: lowering (expertise): 30 mm; axle load to: 915 kg
B12 PK	**2.3 DiSi Turbo MPS, 2.3 MPS, 2.3 MZR, 2.3 MZR Sport** 10/03 - 115 -191 kW	**46-190321**		Conditions see certificates VA: lowering (expertise): 25 mm; axle load to: 1070 kg HA: lowering (expertise): 15 mm; axle load to: 915 kg
B12 PK	**1.6 DI Turbo** 06/04 - 80 kW	**46-190314**		Conditions see certificates VA: lowering (expertise): 30 mm; axle load to: 955 kg HA: lowering (expertise): 30 mm; axle load to: 915 kg
B14	**1.4, 1.6, 1.6 DI Turbo, 2.0, 2.0 MZR-CD, 2.3 MZR** 10/03 - 59 -115 kW	**47-121225**		Conditions see certificates VA: lowering (expertise): 25-40 mm; axle load to: 1100 kg HA: lowering (expertise): 20-40 mm; axle load to: 1090 kg
B14	**2.3 DiSi Turbo MPS, 2.3 MPS, 2.3 MZR Sport** 10/03 - 126 -191 kW	**47-121225**		Conditions see certificates VA: lowering (expertise): 10-25 mm; axle load to: 1100 kg HA: lowering (expertise): 5-25 mm; axle load to: 1090 kg
B16 PSS9	**1.4, 1.6, 1.6 DI Turbo, 2.0, 2.0 MZR-CD, 2.3 MZR** 10/03 - 59 -115 kW	**48-121262**		Conditions see certificates VA: lowering (expertise): 25-40 mm; axle load to: 1100 kg HA: lowering (expertise): 20-40 mm; axle load to: 1090 kg
B16 PSS9	**2.3 DiSi Turbo MPS, 2.3 MPS, 2.3 MZR Sport** 10/03 - 126 -191 kW	**48-121262**		Conditions see certificates VA: lowering (expertise): 10-25 mm; axle load to: 1100 kg HA: lowering (expertise): 5-25 mm; axle load to: 1090 kg

MAZDA 3 Saloon (BK)

B1	**1.6, 1.6 DI Turbo, 2.0, 2.0 MZR-CD, 2.3** 06/00 - 77 -126 kW	**12-224166**		VA: -> 11/08
B3	**1.6** 02/04 - 77 kW	**36-214907**	**36-214914**	with standard chassis; manual transmission
B3	**1.6** 02/04 - 77 kW		**36-214914**	with standard chassis; automatic transmission
B3	**2.0, 2.0 MZR-CD, 2.3** 06/00 - 104 -126 kW		**36-214914**	with standard chassis
B3	**1.6 DI Turbo** 06/04 - 80 kW	**36-214921**	**36-214914**	with standard chassis
B4	**1.6, 1.6 DI Turbo, 2.0, 2.0 MZR-CD, 2.3** 06/00 - 77 -126 kW	**22-112811** **22-112880**	**19-112893**	with standard chassis
B6 Sport	**1.6, 1.6 DI Turbo, 2.0, 2.0 MZR-CD, 2.3** 06/00 - 77 -126 kW	**35-110736** **35-110743**	**24-215220**	
B8	**1.6, 1.6 DI Turbo, 2.0, 2.0 MZR-CD, 2.3** 06/00 - 77 -126 kW	**35-110767** **35-110774**	**24-215237**	
B12 PK	**1.6, 2.0** 02/04 - 77 -110 kW	**46-190307**		Conditions see certificates VA: lowering (expertise): 30 mm; axle load to: 955 kg HA: lowering (expertise): 30 mm; axle load to: 915 kg
B12 PK	**2.3** 06/00 - 03/09 118 -126 kW	**46-190321**		Conditions see certificates VA: lowering (expertise): 25 mm; axle load to: 1070 kg HA: lowering (expertise): 15 mm; axle load to: 915 kg
B12 PK	**1.6 DI Turbo** 06/04 - 80 kW	**46-190314**		Conditions see certificates VA: lowering (expertise): 30 mm; axle load to: 955 kg HA: lowering (expertise): 30 mm; axle load to: 915 kg

M

MAZDA				
MAZDA 3 Saloon (BK)				
B14	**1.6, 1.6 DI Turbo, 2.0, 2.0 MZR-CD, 2.3** 06/00 - 77 -126 kW	**47-121225**		Without roadworthy certificate VA: lowering (expertise): 30-50 mm; axle load to: 1100 kg HA: lowering (expertise): 30-50 mm; axle load to: 1090 kg
B16 PSS9	**1.6, 1.6 DI Turbo, 2.0, 2.0 MZR-CD, 2.3** 06/00 - 77 -126 kW	**48-121262**		Without roadworthy certificate VA: lowering (expertise): 30-50 mm; axle load to: 1100 kg HA: lowering (expertise): 30-50 mm; axle load to: 1090 kg
MAZDA 3 (BL)				
B4	**1.6 MZR, 1.6 MZR CD, 1.6 MZR-CD, 2.0 MZR, 2.0 MZR DISI, 2.2 MZR-CD, 2.3 MPS Turbo, 2.5** 06/09 - 77 -191 kW	**22-112811** **22-112880**	**19-112893**	with standard chassis; rim: 15"; rim: 17"
B6 Sport	**1.6 MZR, 1.6 MZR CD, 1.6 MZR-CD, 2.0 MZR, 2.0 MZR DISI, 2.2 MZR-CD, 2.3 MPS Turbo, 2.5** 06/09 - 77 -191 kW	**35-110736** **35-110743**	**24-196529**	
B8	**1.6 MZR, 1.6 MZR CD, 1.6 MZR-CD, 2.0 MZR, 2.0 MZR DISI, 2.2 MZR-CD, 2.3 MPS Turbo, 2.5** 06/09 - 77 -191 kW	**35-110767** **35-110774**	**24-196550**	
B14	**1.6 MZR, 1.6 MZR CD, 1.6 MZR-CD, 2.0 MZR, 2.0 MZR DISI, 2.2 MZR-CD** 06/09 - 77 -136 kW	**47-121225**		Conditions see certificates VA: lowering (expertise): 25-40 mm; axle load to: 1135 kg HA: lowering (expertise): 20-40 mm; axle load to: 1090 kg
B14	**2.3 MPS Turbo, 2.5** 06/09 - 122 -191 kW	**47-121225**		Conditions see certificates VA: lowering (expertise): 10-25 mm; axle load to: 1135 kg HA: lowering (expertise): 5-25 mm; axle load to: 1090 kg
B16 PSS9	**1.6 MZR, 1.6 MZR CD, 1.6 MZR-CD, 2.0 MZR, 2.0 MZR DISI, 2.2 MZR-CD** 06/09 - 77 -136 kW	**48-121262**		Conditions see certificates VA: lowering (expertise): 25-40 mm; axle load to: 1135 kg HA: lowering (expertise): 25-40 mm; axle load to: 1090 kg
B16 PSS9	**2.3 MPS Turbo, 2.5** 06/09 - 122 -191 kW	**48-121262**		Conditions see certificates VA: lowering (expertise): 10-25 mm; axle load to: 1135 kg HA: lowering (expertise): 5-25 mm; axle load to: 1090 kg
MAZDA 3 Saloon (BL)				
B4	**1.6 MZR, 1.6 MZR CD, 2.0 MZR, 2.0 MZR DISI, 2.2 MZR-CD, 2.5** 06/09 - 77 -136 kW	**22-112811** **22-112880**	**19-112893**	with standard chassis; rim: 15"; rim: 17"
B6 Sport	**1.6 MZR, 1.6 MZR CD, 2.0 MZR, 2.0 MZR DISI, 2.2 MZR-CD, 2.5** 06/09 - 77 -136 kW	**35-110736** **35-110743**	**24-196529**	
B8	**1.6 MZR, 1.6 MZR CD, 2.0 MZR, 2.0 MZR DISI, 2.2 MZR-CD, 2.5** 06/09 - 77 -136 kW	**35-110767** **35-110774**	**24-196550**	
B14	**1.6 MZR, 1.6 MZR CD, 2.0 MZR, 2.0 MZR DISI, 2.2 MZR-CD, 2.5** 06/09 - 77 -136 kW	**47-121225**		Conditions see certificates VA: lowering (expertise): 25-40 mm; axle load to: 1135 kg HA: lowering (expertise): 20-40 mm; axle load to: 1090 kg
B16 PSS9	**1.6 MZR, 1.6 MZR CD, 2.0 MZR, 2.0 MZR DISI, 2.2 MZR-CD, 2.5** 06/09 - 77 -136 kW	**48-121262**		Conditions see certificates VA: lowering (expertise): 25-40 mm; axle load to: 1135 kg HA: lowering (expertise): 25-40 mm; axle load to: 1090 kg
MAZDA 5 (CR19)				
B4	**1.8, 2.0, 2.0 CD, 2.3, 1.6 CD, 2.0** 06/05 - 81 -122 kW	**22-112811** **22-112880**	i.V.	with standard chassis
MAZDA 626 I (CB)				
B6 Sport	**1.6, 2.0** 05/79 - 05/82 55 -66 kW		**24-003193**	

M

MAZDA				
MAZDA 626 I (CB)				
B6 Sport	**1.6, 2.0** 05/79 - 05/82 55 -66 kW		**24-001540**	HA: firmer setting
MAZDA 626 II Hatchback (GC)				
B4	**1.6, 2.0** 03/83 - 06/85 55 -74 kW	*22-045119* *22-045126*	*22-045133* *11-101482* SP	
B4	**1.6, 2.0** 07/85 - 09/87 55 -74 kW		*22-045133* *11-101482* SP	
B4	**2.0** 01/86 - 09/87 88 kW		*22-045133* *11-101482* SP	
B4	**2.0 D** 03/84 - 06/85 46 kW	*22-045119* *22-045126*	*22-045133* *11-101482* SP	
B4	**2.0 D** 07/85 - 06/87 46 kW		*22-045133* *11-101482* SP	
MAZDA 626 II (GC)				
B4	**1.6, 2.0, 2.0 D** 11/82 - 06/85 46 -74 kW	*22-045119* *22-045126*	*22-045133* *11-101482* SP	
B4	**1.6, 2.0, 2.0 D** 07/85 - 09/87 46 -74 kW		*22-045133* *11-101482* SP	
B4	**2.0** 01/86 - 09/87 68 -88 kW		*22-045133* *11-101482* SP	
MAZDA 626 III Hatchback (GD)				
B3	**1.6, 1.8, 2.0, 2.0 12V, 2.0 16V, 2.0 D, 2.2 12V** 06/87 - 05/92 44 -109 kW	**36-160907**	**36-154944**	with standard chassis
B4	**1.6, 1.8, 2.0, 2.0 12V, 2.0 16V, 2.0 D, 2.2 12V** 06/87 - 05/92 44 -109 kW	*22-047571* *22-047588*	*22-049018* *22-049025*	without electronic suspension control; without four wheel steering
MAZDA 626 III (GD)				
B3	**1.6, 1.8, 2.0, 2.0 12V, 2.0 16V, 2.0 D, 2.2 12V** 06/87 - 05/92 44 -109 kW	**36-160907**	**36-154944**	with standard chassis
B4	**1.6, 1.8, 2.0, 2.0 12V, 2.0 16V, 2.0 D, 2.2 12V** 06/87 - 05/92 44 -109 kW	*22-047571* *22-047588*	*22-049018* *22-049025* *22-049001*	without electronic suspension control; without four wheel steering
MAZDA 626 III Station Wagon (GV)				
B3	**1.8, 2.0, 2.0 12V, 2.0 16V, 2.0 D, 2.0 D Comprex, 2.0 GLX, 2.0 i, 2.2 12V** 09/87 - 11/96 44 -110 kW	**36-159895**	**36-159864**	with standard chassis
B4	**1.8, 2.0, 2.0 12V, 2.0 16V, 2.0 D, 2.0 D Comprex, 2.0 GLX, 2.0 i, 2.2 12V** 09/87 - 11/96 44 -110 kW	*22-047571* *22-047588*	*22-049148*	without electronic suspension control
B4	**2.2 12V 4WD** 05/91 - 11/92 85 kW	*22-047595* *22-047601*	*22-049155* *22-049162*	without electronic suspension control
MAZDA 626 III Coupe (GD)				
B3	**1.6** 06/87 - 05/92 60 kW	**36-160907**	**36-154944**	with standard chassis

M

MAZDA				
MAZDA 626 III Coupe (GD)				
B3	**1.8, 2.0, 2.0 12V, 2.0 16V, 2.2 12V** 06/87 - 12/91 65 -109 kW	**36-160907**	**36-154944**	with standard chassis
B4	**1.6, 1.8, 2.0, 2.0 12V, 2.0 16V, 2.2 12V** 06/87 - 05/92 60 -109 kW	*22-047571* *22-047588*	*22-049018* *22-049025* *22-049001*	without electronic suspension control; without four wheel steering
MAZDA 626 IV Hatchback (GE)				
B3	**1.8, 2.0 i** 08/91 - 04/97 66 -85 kW	**36-159949**	**36-159901**	with standard chassis
B3	**2.5 24V** 01/92 - 04/97 120 -121 kW	**36-159932**	**36-159901**	with standard chassis
B3	**2.0 D GLX Comprex** 01/93 - 04/97 55 kW	**36-159925**	**36-159901**	with standard chassis
B4	**1.8** 08/94 - 04/97 66 kW	*22-047625*		without electronic suspension control; without four wheel steering; without ride height adjustment
B4	**1.8** 08/94 - 04/97 66 kW	*22-047632* *22-047649*		without electronic suspension control; without four wheel steering; with ride height adjustment
B4	**1.8** 08/91 - CH-Nr. 77 kW	*22-047625*	*22-049032*	-> CH.Nr.: 271863; without electronic suspension control; without four wheel steering; without ride height adjustment
B4	**1.8** CH-Nr. - 04/97 77 kW	*22-047625*		CH.Nr.: 271864 ->; without electronic suspension control; without four wheel steering; without ride height adjustment
B4	**1.8** 08/91 - 04/97 77 kW	*22-047632* *22-047649*		without electronic suspension control; without four wheel steering; with ride height adjustment
B4	**2.0 i** 08/91 - CH-Nr. 85 kW	*22-047625*	*22-049032*	-> CH.Nr.: 271863; without electronic suspension control; without four wheel steering; without ride height adjustment
B4	**2.0 i** CH-Nr. - 04/97 85 kW	*22-047625*		CH.Nr.: 271864 ->; without electronic suspension control; without four wheel steering; without ride height adjustment
B4	**2.0 i** 08/91 - 04/97 85 kW	*22-047632* *22-047649*		without electronic suspension control; without four wheel steering; with ride height adjustment
B4	**2.5 24V** 01/92 - 04/97 120 -121 kW	*22-047625*	*22-049032*	without electronic suspension control; without four wheel steering; without ride height adjustment
B4	**2.5 24V** 01/92 - 04/97 120 -121 kW	*22-047625*	*22-049049*	without electronic suspension control; without four wheel steering; with ride height adjustment
B4	**2.0 D GLX Comprex** 01/93 - CH-Nr. 55 kW	*22-047625*	*22-049032*	-> CH.Nr.: 271863; without electronic suspension control; without four wheel steering; without ride height adjustment
B4	**2.0 D GLX Comprex** CH-Nr. - 04/97 55 kW	*22-047625*		CH.Nr.: 271864 ->; without electronic suspension control; without four wheel steering; without ride height adjustment
B4	**2.0 D GLX Comprex** 01/93 - 04/97 55 kW	*22-047632* *22-047649*		without electronic suspension control; without four wheel steering; with ride height adjustment
MAZDA 626 IV (GE)				
B3	**1.8 i, 2.0 i** 01/92 - 04/97 66 -85 kW	**36-159949**	**36-159901**	with standard chassis
B3	**2.0 D GLX Comprex** 10/92 - 04/97 55 kW	**36-159925**	**36-159901**	with standard chassis
B4	**1.8 i** 08/94 - 04/97 66 kW	*22-047625*		without electronic suspension control; without four wheel steering; without ride height adjustment

M

MAZDA				
MAZDA 626 IV (GE)				
B4	**1.8 i** 01/92 - 04/97 66 -77 kW	*22-047632* *22-047649*		without electronic suspension control; without four wheel steering; with ride height adjustment
B4	**1.8 i, 2.0 D GLX Comprex, 2.0 i, 2.5 24V** 01/92 - CH-Nr. 55 -121 kW	*22-047625*	*22-049032*	-> CH.Nr.: 271863; without electronic suspension control; without four wheel steering; without ride height adjustment
B4	**1.8 i** CH-Nr. - 04/97 77 kW	*22-047625*		CH.Nr.: 271864 ->; without electronic suspension control; without four wheel steering; without ride height adjustment
B4	**2.0 i, 2.5 24V** CH-Nr. - 04/97 85 -121 kW	*22-047625*		CH.Nr.: 271864 ->; without electronic suspension control; without four wheel steering; without ride height adjustment
B4	**2.0 i, 2.5 24V** 01/92 - 04/97 85 -121 kW	*22-047632* *22-047649*		without electronic suspension control; without four wheel steering; with ride height adjustment
B4	**2.0 i 4WD** 04/92 - 04/97 85 kW	*22-047632* *22-047649*	*22-049056* *22-049063*	without electronic suspension control; without four wheel steering; without ride height adjustment
B4	**2.0 D GLX Comprex** CH-Nr. - 04/97 55 kW	*22-047625*		CH.Nr.: 271864 ->; without electronic suspension control; without four wheel steering; without ride height adjustment
B4	**2.0 D GLX Comprex** 10/92 - 04/97 55 kW	*22-047632* *22-047649*		without electronic suspension control; without four wheel steering; with ride height adjustment
MAZDA 626 V Hatchback (GF)				
B4	**1.8** 05/97 - 10/02 66 -74 kW	**11-101376** SP		without electronic suspension control; without ride height adjustment
B4	**1.8** 05/97 - 10/02 66 -74 kW	*22-047724*		without electronic suspension control; with ride height adjustment
B4	**2.0, 2.0 H.P.** 05/97 - 10/02 85 -100 kW	**11-101376** SP		without electronic suspension control; without ride height adjustment
B4	**2.0, 2.0 H.P.** 05/97 - 10/02 85 -100 kW	*22-047724*		without electronic suspension control; with ride height adjustment
B4	**2.0 Turbo DI** 04/98 - 10/02 74 kW			without electronic suspension control; without ride height adjustment
B4	**2.0 Turbo DI** 04/98 - 10/02 74 kW	*22-047724*		without electronic suspension control; with ride height adjustment
MAZDA 626 V (GF)				
B4	**1.6, 1.8, 1.9** 05/97 - 12/99 66 -79 kW	**11-101376** SP		without electronic suspension control; without ride height adjustment
B4	**1.6, 1.8, 1.9** 05/97 - 12/99 66 -79 kW	*22-047724*		without electronic suspension control; with ride height adjustment
B4	**2.0** 05/97 - 10/02 85 -100 kW	**11-101376** SP		without electronic suspension control; without ride height adjustment
B4	**2.0** 05/97 - 10/02 85 -100 kW	*22-047724*		without electronic suspension control; with ride height adjustment
B4	**2.0 DITD, 2.0 TD, 2.0 Turbo DI** 04/98 - 10/02 66 -81 kW			without electronic suspension control; without ride height adjustment
B4	**2.0 DITD, 2.0 TD, 2.0 Turbo DI** 04/98 - 10/02 66 -81 kW	*22-047724*		without electronic suspension control; with ride height adjustment
MAZDA 626 V Station Wagon (GW)				
B4	**1.8, 1.9, 2.0, 2.0 DITD, 2.0 H.P., 2.0 Turbo DI** 04/98 - 10/02 66 -100 kW			without electronic suspension control; without ride height adjustment

M

MAZDA

MAZDA 626 V Station Wagon (GW)

B4	**1.8, 1.9, 2.0, 2.0 DITD, 2.0 H.P., 2.0 Turbo DI** 04/98 - 10/02 66 -100 kW	*22-047724*		without electronic suspension control; with ride height adjustment

MAZDA 6 Hatchback (GG)

B3	**2.0** 08/02 - 02/04 104 kW	**36-215119**	**36-215102**	with standard chassis; manual transmission
B3	**2.0** 03/04 - 104 kW	**36-214464** **36-214457**	**36-215102**	with standard chassis; manual transmission
B3	**2.0** 08/02 - 02/04 104 kW	**36-219056**	**36-215102**	with standard chassis; automatic transmission
B3	**2.0** 03/04 - 104 kW	**36-219063**	**36-215102**	with standard chassis; automatic transmission
B3	**2.0 DI** 08/02 - 02/04 89 -100 kW	**36-223053**	**36-214471**	with standard chassis
B3	**2.0 DI** 08/02 - 02/04 89 -100 kW	**36-223060**		with standard chassis; Heavy Duty Version .
B3	**2.0 DI** 03/04 - 89 -100 kW	**36-219209** **36-219193**	**36-214471**	with standard chassis
B4	**1.8, 2.0, 2.0 DI, 2.3** 08/02 - 02/05 88 -122 kW	*19-112909* *19-112916*	**19-112862** OIO	
B6 Sport	**1.8, 2.0, 2.0 DI, 2.3** 08/02 - 02/05 88 -122 kW	**24-102568** **24-102575**	**24-102582** OIO	with standard chassis
B8	**1.8, 2.0, 2.0 DI, 2.3** 08/02 - 02/05 88 -122 kW	**24-102599** **24-102605**	**24-102612** OIO	with sports suspension
B12 PK	**1.8, 2.0, 2.3** 08/02 - 02/05 88 -122 kW	**46-192646**		Conditions see certificates VA: lowering (expertise): 30 mm; axle load to: 1040 kg HA: lowering (expertise): 30 mm; axle load to: 1010 kg
B12 PK	**2.0 DI** 08/02 - 02/05 89 -100 kW	**46-192660**		Conditions see certificates VA: lowering (expertise): 30 mm; axle load to: 1095 kg HA: lowering (expertise): 30 mm; axle load to: 1010 kg

MAZDA 6 (GG)

B3	**1.8** 08/02 - 88 kW	**36-214464** **36-214457**	**36-214471**	with standard chassis
B3	**2.0** 06/02 - 02/04 104 kW	**36-215119**	**36-214471**	with standard chassis; manual transmission
B3	**2.0** 03/04 - 104 kW	**36-214464** **36-214457**	**36-214471**	with standard chassis; manual transmission
B3	**2.0** 06/02 - 02/04 104 kW	**36-219056**	**36-214471**	with standard chassis; automatic transmission
B3	**2.0** 03/04 - 104 kW	**36-219063**	**36-214471**	with standard chassis; automatic transmission
B3	**2.0** 03/05 - 108 kW	**36-214464** **36-214457**	**36-214471**	with standard chassis; manual transmission
B3	**2.3** 06/02 - 02/04 122 kW	**36-214990**	**36-214471**	with standard chassis; manual transmission
B3	**2.0 DI** 06/02 - 02/04 89 -100 kW	**36-223053**	**36-214471**	with standard chassis

MAZDA				
MAZDA 6 (GG)				
B3	**2.0 DI** 06/02 - 02/04 89 -100 kW	**36-223060**		with standard chassis; Heavy Duty Version .
B3	**2.0 DI** 03/04 - 89 -100 kW	**36-219209** **36-219193**	**36-214471**	with standard chassis
B3	**2.0 DI** 06/05 - 105 kW	**36-219209** **36-219193**	**36-214471**	with standard chassis
B4	**1.8, 2.0, 2.0 DI, 2.3** 06/02 - 02/05 88 -122 kW	*19-112909* *19-112916*	**19-112862**	
B6 Sport	**1.8, 2.0, 2.0 DI, 2.3** 06/02 - 02/05 88 -122 kW	**24-102568** **24-102575**	**24-102582**	with standard chassis
B8	**1.8, 2.0, 2.0 DI, 2.3** 06/02 - 02/05 88 -122 kW	**24-102599** **24-102605**	**24-102612**	with sports suspension
B12 PK	**1.8, 2.0, 2.3** 06/02 - 02/05 88 -122 kW	**46-192646**		Conditions see certificates VA: lowering (expertise): 30 mm; axle load to: 1040 kg HA: lowering (expertise): 30 mm; axle load to: 1010 kg
B12 PK	**2.0 DI** 06/02 - 02/05 89 -100 kW	**46-192660**		Conditions see certificates VA: lowering (expertise): 30 mm; axle load to: 1095 kg HA: lowering (expertise): 30 mm; axle load to: 1010 kg
MAZDA 6 Station Wagon (GY)				
B3	**1.8, 2.0** 08/02 - 88 -108 kW	**36-214464** **36-214457**	**36-214594**	with standard chassis
B3	**2.0 DI** 08/02 - 02/04 89 -100 kW	**36-223053**	**36-214471**	with standard chassis
B4	**1.8, 2.0, 2.0 DI, 2.3** 08/02 - 02/05 88 -122 kW	*19-112909* *19-112916*	**19-112862**	
B6 Sport	**1.8, 2.0, 2.0 DI, 2.3** 08/02 - 02/05 88 -122 kW	**24-102568** **24-102575**	**24-102582**	with standard chassis
B8	**1.8, 2.0, 2.0 DI, 2.3** 08/02 - 02/05 88 -122 kW	**24-102599** **24-102605**	**24-102612**	with sports suspension
B12 PK	**1.8, 2.0, 2.3** 08/02 - 02/05 88 -122 kW	**46-192653**		Conditions see certificates VA: lowering (expertise): 30 mm; axle load to: 1040 kg HA: lowering (expertise): 30 mm; axle load to: 1100 kg
B12 PK	**2.0 DI** 08/02 - 02/05 89 -100 kW	**46-192677**		Conditions see certificates VA: lowering (expertise): 30 mm; axle load to: 1095 kg HA: lowering (expertise): 30 mm; axle load to: 1100 kg
MAZDA 929 I (LA)				
B6 Sport	**2.0** 05/79 - 07/86 66 kW		**24-003193**	
B6 Sport	**2.0** 05/79 - 07/86 66 kW		**24-001540**	HA: firmer setting
MAZDA 929 II (HB)				
B3	**2.0, 2.0 i GLX** 05/82 - 07/87 66 -88 kW	**36-161072**	**36-160921**	with standard chassis
MAZDA 929 II Coupe (HB)				
B3	**2.0, 2.0 i, 2.0 i Turbo** 05/82 - 07/87 66 -89 kW	**36-161072**	**36-160921**	with standard chassis

M

MAZDA				
MAZDA B-SERIE (UF)				
B4	**2.5 D 4WD** 02/96 - 06/99 57 -63 kW	**19-107899**	**19-132495**	
MAZDA B-SERIE (UN)				
B4	**2.2 4WD, 2.2 8V 4WD, 2.5 D, 2.5 D 4WD, 2.5 D 4x4, 2.5 TD 4WD, 2.5 TDiC 4x4, 2.6 12V 4WD** 02/99 - 57 -90 kW	**19-107899**	**19-132495**	with standard chassis
MAZDA DEMIO (DW)				
B3	**1.3 16V, 1.5 i 16V** 10/96 - 46 -64 kW	36-216772	**36-215027**	with standard chassis; manual transmission
MAZDA MPV II (LW)				
B4	**2.0** 09/99 - 07/02 88 -90 kW	22-158444 22-158451	**19-158464**	with standard chassis
MAZDA MX-3 (EC)				
B3	**1.6 i** 11/93 - CH-Nr. 65 -79 kW	**36-219322**	**36-215126**	-> CH.Nr.: EC2***213793; with standard chassis; without ABS
B3	**1.6 i** 11/93 - CH-Nr. 65 -79 kW	**36-219339**	**36-215126**	-> CH.Nr.: EC1***213793; with standard chassis; with ABS
B3	**1.6 i** CH-Nr. - 65 -79 kW	**36-219322**	**36-215126**	CH.Nr.: EC1***213794 ->; with standard chassis; with ABS
B3	**1.8 i V6** 01/92 - 95 -98 kW	**36-219339**	**36-215126**	with standard chassis
MAZDA MX-5 I (NA)				
B3	**1.6, 1.8** 02/94 - 10/96 66 -96 kW	**36-216758**	**36-216796**	with standard chassis
B3	**1.6, 1.8** 11/96 - 12/97 66 -96 kW	**36-216758**	**36-216819**	with standard chassis
B3	**1.6, 1.8** 02/94 - 04/98 66 -96 kW		**36-216802**	with standard chassis; Only in connection with Dämpfer 24-014892
B3	**1.6, 1.8** 05/90 - 09/93 85 -96 kW	**36-216741**	**36-216796**	with standard chassis
B6 Sport	**1.6, 1.8** 02/94 - 04/98 66 -96 kW	**24-014885**	**24-014892**	
MAZDA MX-5 II (NB)				
B3	**1.6 16V, 1.8, 1.8 16V, 1.9 16V, 1.9 i, 1.9 i Turbo** 01/98 - 10/05 81 -157 kW	**36-216765**	**36-215003**	with standard chassis
B6 Sport	**1.6 16V, 1.8, 1.8 16V, 1.9 16V, 1.9 i, 1.9 i Turbo** 01/98 - 10/05 81 -157 kW	**24-065580**	**24-065597**	
B8	**1.6 16V, 1.8, 1.8 16V, 1.9 16V, 1.9 i, 1.9 i Turbo** 01/98 - 10/05 81 -157 kW	**24-065504**	**24-065511**	
B14	**1.6 16V, 1.8, 1.8 16V, 1.9 16V, 1.9 i, 1.9 i Turbo** 01/98 - 10/05 81 -157 kW	**47-083004**		Without roadworthy certificate VA: lowering (expertise): 40-20 mm HA: lowering (expertise): 35-15 mm

M

MAZDA

MAZDA MX-5 II (NB)

B16 PSS9	**1.6 16V, 1.8, 1.8 16V, 1.9 16V, 1.9 i, 1.9 i Turbo** 01/98 - 10/05 81 -157 kW		**48-086097**	Conditions see certificates VA: lowering (expertise): 35-50 mm; axle load to: 655 kg HA: lowering (expertise): 35-45 mm; axle load to: 665 kg

MAZDA MX-5 III (NC)

B3	**1.8** 03/05 - 93 kW	**36-216833**	36-216826	with standard chassis
B3	**2.0** 03/05 - 118 kW	**36-216833**	36-216826	with standard chassis; Not for 6 speed manual transmission; rim: 16"
B3	**2.0** 03/05 - 118 kW	**36-216789**	36-216826	with standard chassis; Not for 6 speed manual transmission; rim: 17"
B3	**2.0** 03/05 - 118 kW	**36-216833**	36-216826	with standard chassis; Manual Transmission, 6-speed; rim: 17"
B4	**1.8, 2.0** 03/05 - 93 -118 kW	*24-122610* HA	*24-122627* VO	with sports suspension; with standard chassis
B6 Sport	**1.8, 2.0** 03/05 - 93 -118 kW	**24-131742** HA	**24-131759** VO	
B8	**1.8, 2.0** 03/05 - 93 -118 kW	**24-131766** HA	**24-131773** VO	
B12 PK	**1.8, 2.0** 03/05 - 93 -118 kW	**46-190345**		Conditions see certificates VA: lowering (expertise): 30-35 mm; axle load to: 720 kg HA: lowering (expertise): 30 mm; axle load to: 720 kg
B14	**1.8, 2.0** 03/05 - 93 -118 kW	**47-131811**		Conditions see certificates VA: lowering (expertise): 30-50 mm; axle load to: 680 kg HA: lowering (expertise): 30-50 mm; axle load to: 705 kg
B16 PSS10	**1.8, 2.0** 03/05 - 93 -118 kW	**48-131841**		Conditions see certificates VA: lowering (expertise): 30-50 mm; axle load to: 680 kg HA: lowering (expertise): 30-50 mm; axle load to: 705 kg

MAZDA MX-6 (GE)

B4	**1.8, 2.0, 2.2** 02/92 - 74 -162 kW	*22-047625*	*22-049032*	without four wheel steering; without ride height adjustment
B4	**1.8, 2.0, 2.2, 2.5 24V, 2.5 i 24V** 08/94 - 74 -162 kW	*22-047625*	*22-049049*	with four wheel steering; without ride height adjustment
B4	**2.5 24V, 2.5 i 24V** 02/92 - 120 -121 kW	*22-047625*	*22-049032*	without four wheel steering; without ride height adjustment

MAZDA PREMACY (CP)

B3	**1.8, 1.9** 07/99 - 07/01 74 -84 kW	**36-216093**	**36-215966**	with standard chassis; without 3rd seating row
B3	**1.8, 1.9** 08/01 - 74 -84 kW	**36-216109**	**36-215966**	with standard chassis; without 3rd seating row
B3	**2.0** 11/01 - 96 -107 kW	36-216116	**36-215966**	with standard chassis; without 3rd seating row
B3	**2.0 TD** 10/99 - 07/01 66 -74 kW	**36-215140**	**36-215966**	with standard chassis; without 3rd seating row
B3	**2.0 TD** 08/01 - 74 kW	**36-216123**	**36-215966**	with standard chassis; without 3rd seating row
B4	**1.8, 1.9, 2.0 TD** 07/99 - 06/01 66 -84 kW	i.V. i.V.	22-165022 22-165039	

M

MAZDA

MAZDA PREMACY (CP)

B4	**1.8, 1.9, 2.0, 2.0 TD, 2.3 SVT** 07/01 - 74 -122 kW	**22-167095** **22-167101**	**22-165022** **22-165039**	

MAZDA RX 7 II (FC)

B6 Sport	**Turbo, Wankel** 11/85 - 12/91 110 -147 kW	**34-050149**	**24-012140**	

MAZDA RX 7 III (FD)

B6 Sport	**Wankel Twin Turbo** 07/92 - 176 kW	*24-017794* *24-017787*	*24-015509*	

MAZDA RX 8 (SE17)

B6 Sport	**2.6, 2.6 Wankel** 10/03 - 141 -177 kW	**24-110044**	**24-110051**	
B8	**2.6, 2.6 Wankel** 10/03 - 141 -177 kW	**24-110068**	**24-110075**	
B12 PK	**2.6, 2.6 Wankel** 10/03 - 141 -177 kW	**46-190338**		Conditions see certificates VA: lowering (expertise): 25-30 mm; axle load to: 860 kg HA: lowering (expertise): 25 mm; axle load to: 1030 kg
B14	**2.6, 2.6 Wankel** 10/03 - 141 -177 kW	**47-110267**		Conditions see certificates VA: lowering (expertise): 30-50 mm; axle load to: 860 kg HA: lowering (expertise): 30-50 mm; axle load to: 1030 kg
B16 PSS9	**2.6, 2.6 Wankel** 10/03 - 141 -177 kW	**48-110297**		Conditions see certificates VA: lowering (expertise): 30-50 mm; axle load to: 860 kg HA: lowering (expertise): 30-50 mm; axle load to: 1030 kg

MAZDA TRIBUTE (EP)

B4	**2.0, 2.0 4WD, 2.3 AWD, 3.0 V6 24V 4WD, 3.0 V6 AWD** 03/00 - 91 -149 kW	i.V. i.V.	**19-165998**	

MAZDA XEDOS 6 (CA)

B3	**1.6 16V, 1.8, 2.0 V6** 01/92 - 79 -106 kW	**36-154821**	**36-163823**	with standard chassis
B6 Sport	**1.6 16V, 1.8, 2.0 V6** 01/92 - 79 -106 kW	**34-050262**	**34-050279**	Conditions see certificates

MAZDA XEDOS 9 (TA)

B3	**2.0, 2.0 24V** 08/93 - 08/00 105 -118 kW	**36-159888**		with standard chassis

CHANGAN MAZDA

CHANGAN MAZDA 3 Saloon

B4	**1.6, 2.0** 02/06 - 77 -110 kW	**22-112811** **22-112880**	**19-112893**	with standard chassis
B6 Sport	**1.6, 2.0** 02/06 - 77 -110 kW	**35-110736** **35-110743**	**24-215220**	
B8	**1.6, 2.0** 02/06 - 77 -110 kW	**35-110767** **35-110774**	**24-215237**	
B12 PK	**1.6, 2.0** 02/06 - 77 -110 kW	**46-190307**		Conditions see certificates VA: lowering (expertise): 30 mm; axle load to: 955 kg HA: lowering (expertise): 30 mm; axle load to: 915 kg

CHANGAN MAZDA

CHANGAN MAZDA 3 Saloon

B14	**1.6, 2.0** 02/06 - 77 -110 kW	**47-121225**		Conditions see certificates VA: lowering (expertise): 25-40 mm; axle load to: 1100 kg HA: lowering (expertise): 20-40 mm; axle load to: 1090 kg
B16 PSS9	**1.6, 2.0** 02/06 - 77 -110 kW	**48-121262**		Conditions see certificates VA: lowering (expertise): 25-40 mm; axle load to: 1100 kg HA: lowering (expertise): 20-40 mm; axle load to: 1090 kg

CHANGAN MAZDA 3 Saloon

B6 Sport	**1.6, 2.0** 01/09 - 79 -110 kW	**35-110736** **35-110743**	**24-196529**	
B8	**1.6, 2.0** 01/09 - 79 -110 kW	**35-110767** **35-110774**	**24-196550**	
B14	**1.6, 2.0** 01/09 - 79 -110 kW	**47-121225**		Conditions see certificates VA: lowering (expertise): 25-40 mm; axle load to: 1135 kg HA: lowering (expertise): 20-40 mm; axle load to: 1090 kg
B16 PSS9	**1.6, 2.0** 01/09 - 79 -110 kW	**48-121262**		Conditions see certificates VA: lowering (expertise): 25-40 mm; axle load to: 1135 kg HA: lowering (expertise): 25-40 mm; axle load to: 1090 kg

CHANGAN MAZDA 3 Hatchback

B6 Sport	**1.6, 2.0** 09/11 - 79 -110 kW	**35-110736** **35-110743**	**24-196529**	
B8	**1.6, 2.0** 09/11 - 79 -110 kW	**35-110767** **35-110774**	**24-196550**	
B14	**1.6, 2.0** 09/11 - 79 -110 kW	**47-121225**		Conditions see certificates VA: lowering (expertise): 25-40 mm; axle load to: 1135 kg HA: lowering (expertise): 20-40 mm; axle load to: 1090 kg
B16 PSS9	**1.6, 2.0** 09/11 - 79 -110 kW	**48-121262**		Conditions see certificates VA: lowering (expertise): 25-40 mm; axle load to: 1135 kg HA: lowering (expertise): 25-40 mm; axle load to: 1090 kg

MERCEDES-BENZ

MERCEDES-BENZ A-CLASS (W168)

B1	**A 140, A 160, A 160 CDI, A 170 CDI, A 190, A 210** 07/97 - 08/04 44 -103 kW	**12-117314**		VA: with ball bearing
B3	**A 140, A 160** 07/97 - 08/04 60 -75 kW	**37-129392**	**36-129447**	with standard chassis
B3	**A 140, A 160** 07/97 - 08/04 60 -75 kW	**37-129408**	**36-129454**	with standard chassis; Heavy Duty Version .
B3	**A 160 CDI, A 190** 07/98 - 08/04 44 -92 kW	**37-129408**	**36-129447**	with standard chassis
B3	**A 160 CDI, A 190** 07/98 - 08/04 44 -92 kW	**37-133627**	**36-129454**	with standard chassis; Heavy Duty Version .
B3	**A 170 CDI, A 210** 07/98 - 08/04 66 -103 kW	**37-133627**	**36-129447**	with standard chassis
B3	**A 170 CDI, A 210** 07/98 - 08/04 66 -103 kW		**36-129454**	with standard chassis; Heavy Duty Version .
B4	**A 140, A 160, A 160 CDI, A 170 CDI, A 190, A 210** 07/97 - 08/04 44 -103 kW	**22-049698**	**24-067829**	

M

MERCEDES-BENZ				
MERCEDES-BENZ A-CLASS (W168)				
B6 Sport	**A 140, A 160, A 160 CDI, A 170 CDI, A 190, A 210** 07/97 - 08/04 44 -103 kW	**22-044099**	**24-027458**	
B8	**A 140, A 160, A 160 CDI, A 170 CDI, A 190, A 210** 07/97 - 08/04 44 -103 kW	**22-044105**	**24-027465**	
B12 PK	**A 140, A 160, A 160 CDI, A 170 CDI, A 190, A 210** 07/97 - 08/04 44 -103 kW	**46-190383**		Conditions see certificates; Short Wheelbase VA: lowering (expertise): 20 mm; axle load to: 810 kg HA: lowering (expertise): 20 mm; axle load to: 845 kg
MERCEDES-BENZ A-CLASS (W169)				
B3	**A 150, A 160, A 170, A 180, A 200, A 200 TURBO** 09/04 - 70 -142 kW	**37-172046**	**36-172085**	with standard chassis; manual transmission
B3	**A 150, A 160, A 170, A 180, A 200, A 200 TURBO** 09/04 - 70 -142 kW	**37-172107**	**36-172085**	with standard chassis; automatic transmission
B3	**A 150, A 160, A 170, A 180, A 200, A 200 TURBO** 09/04 - 70 -142 kW	**37-172053**		with standard chassis; Heavy Duty Version .
B3	**A 150, A 160, A 170, A 180, A 200, A 200 TURBO** 09/04 - 70 -142 kW	**37-172145**	**36-172078**	with sports suspension
B3	**A 150, A 160, A 170, A 180, A 200, A 200 TURBO** 09/04 - 70 -142 kW	**37-172015**	**36-172061**	with sports suspension; Heavy Duty Version .
B3	**A 160 CDI, A 180 CDI, A 200 CDI** 09/04 - 60 -103 kW	**37-172107**	**36-172085**	with standard chassis; manual transmission
B3	**A 160 CDI, A 180 CDI, A 200 CDI** 09/04 - 60 -103 kW	**37-172114**		with standard chassis; Heavy Duty Version .; manual transmission
B3	**A 160 CDI, A 180 CDI, A 200 CDI** 09/04 - 60 -103 kW	**37-172121**	**36-172085**	with standard chassis; automatic transmission
B3	**A 160 CDI, A 180 CDI, A 200 CDI** 09/04 - 60 -103 kW	**37-172138**		with standard chassis; Heavy Duty Version .; automatic transmission
B3	**A 160 CDI, A 180 CDI, A 200 CDI** 09/04 - 60 -103 kW	**37-172022**	**36-172061**	with sports suspension; manual transmission
B3	**A 160 CDI, A 180 CDI, A 200 CDI** 09/04 - 60 -103 kW	**37-172022**	**36-172078**	with sports suspension; Heavy Duty Version .
B3	**A 160 CDI, A 180 CDI, A 200 CDI** 09/04 - 60 -103 kW	**37-172039**	**36-172092**	with sports suspension; automatic transmission
B4	**A 150, A 160, A 160 CDI, A 170, A 180, A 180 CDI, A 200, A 200 CDI, A 200 TURBO** 09/04 - 60 -142 kW	**22-215734** **11-125358** SP	**24-123266**	with standard chassis
B4	**A 150, A 160, A 160 CDI, A 170, A 180, A 180 CDI, A 200, A 200 CDI, A 200 TURBO** 09/04 - 60 -142 kW	**11-125358** SP	**24-104371**	with sports suspension; mark: 486
B4	**A 150, A 160, A 160 CDI, A 170, A 180, A 180 CDI, A 200, A 200 CDI, A 200 TURBO** 09/04 - 60 -142 kW	**11-125358** SP	**24-104616**	with off-road suspension; mark: 484, 924
B6 Sport	**A 150, A 160, A 160 CDI, A 170, A 180, A 180 CDI, A 200, A 200 CDI, A 200 TURBO** 09/04 - 60 -142 kW	*22-153753* **11-125358** SP	**24-120364**	

MERCEDES-BENZ				
MERCEDES-BENZ A-CLASS (W169)				
B8	**A 150, A 160, A 160 CDI, A 170, A 180, A 180 CDI, A 200, A 200 CDI, A 200 TURBO** 09/04 - 60 -142 kW	*22-153746* **11-125358** SP	**24-120340**	
B12 PK	**A 150, A 170, A 200** 09/04 - 70 -100 kW	**46-182104**		spring pads must be observed; without ride height adjustment; Conditions see certificates VA: lowering (expertise): 30 mm; axle load to: 885 kg HA: lowering (expertise): 25 mm; axle load to: 900 kg
B12 PK	**A 160 CDI, A 180 CDI, A 200 CDI, A 200 TURBO** 09/04 - 60 -142 kW	**46-182098**		spring pads must be observed; without ride height adjustment; Conditions see certificates VA: lowering (expertise): 30 mm; axle load to: 980 kg HA: lowering (expertise): 25 mm; axle load to: 900 kg
MERCEDES-BENZ B-CLASS (W245)				
B3	**B 150, B 160, B 170, B 180, B 200, B 200 TURBO** 03/05 - 70 -142 kW	**37-172046**	**36-172085**	with standard chassis; manual transmission
B3	**B 150, B 160, B 170, B 180, B 200, B 200 TURBO** 03/05 - 70 -142 kW	**37-172107**	**36-172085**	with standard chassis; automatic transmission
B3	**B 150, B 160, B 170, B 180, B 200, B 200 TURBO** 03/05 - 70 -142 kW	**37-172053**		with standard chassis; Heavy Duty Version .
B3	**B 150, B 160, B 170, B 180, B 200, B 200 TURBO** 03/05 - 70 -142 kW	**37-172145**	**36-172078**	with sports suspension
B3	**B 150, B 160, B 170, B 180, B 200, B 200 TURBO** 03/05 - 70 -142 kW	**37-172015**	**36-202867**	with sports suspension; Heavy Duty Version .
B3	**B 180 CDI, B 200 CDI** 03/05 - 80 -103 kW	**37-172107**	**36-172085**	with standard chassis; manual transmission
B3	**B 180 CDI, B 200 CDI** 03/05 - 80 -103 kW	**37-172114**		with standard chassis; Heavy Duty Version .; manual transmission
B3	**B 180 CDI, B 200 CDI** 03/05 - 80 -103 kW	**37-172121**	**36-172085**	with standard chassis; automatic transmission
B3	**B 180 CDI, B 200 CDI** 03/05 - 80 -103 kW	**37-172138**		with standard chassis; Heavy Duty Version .; automatic transmission
B3	**B 180 CDI, B 200 CDI** 03/05 - 80 -103 kW	**36-202874**	**36-202867**	with sports suspension; manual transmission
B3	**B 180 CDI, B 200 CDI** 03/05 - 80 -103 kW	**37-172022**	**36-172078**	with sports suspension; Heavy Duty Version .
B3	**B 180 CDI, B 200 CDI** 03/05 - 80 -103 kW	**37-172039**	**36-172092**	with sports suspension; automatic transmission
B4	**B 150, B 160, B 170, B 170 NGT, B 180, B 180 CDI, B 180 NGT, B 200, B 200 CDI, B 200 TURBO** 03/05 - 70 -142 kW	**11-125358** SP	**24-110204**	with standard chassis
B4	**B 150, B 160, B 170, B 170 NGT, B 180, B 180 CDI, B 180 NGT, B 200, B 200 CDI, B 200 TURBO** 03/05 - 70 -142 kW	**22-215840** **11-125358** SP	**24-110211**	with sports suspension
B6 Sport	**B 150, B 160, B 170, B 170 NGT, B 180, B 180 CDI, B 180 NGT, B 200, B 200 CDI, B 200 TURBO** 03/05 - 70 -142 kW	*22-153753* **11-125358** SP	**24-120364**	

M

MERCEDES-BENZ				
MERCEDES-BENZ B-CLASS (W245)				
B8	**B 150, B 160, B 170, B 170 NGT, B 180, B 180 CDI, B 180 NGT, B 200, B 200 CDI, B 200 TURBO** 03/05 - 70 -142 kW	*22-153746* **11-125358** SP	**24-120340**	
B12 PK	**B 150, B 170** 03/05 - 70 -85 kW	**46-182111**		spring pads must be observed; without ride height adjustment; Conditions see certificates VA: lowering (expertise): 30 mm; axle load to: 950 kg HA: lowering (expertise): 30 mm; axle load to: 900 kg
B12 PK	**B 180 CDI, B 200, B 200 CDI, B 200 TURBO** 03/05 - 80 -142 kW	**46-000637**		spring pads must be observed; without ride height adjustment; Conditions see certificates VA: lowering (expertise): 30 mm; axle load to: 1005 kg HA: lowering (expertise): 30 mm; axle load to: 900 kg
MERCEDES-BENZ B-CLASS (W246)				
B4	**B 180, B 180 CDI, B 200, B 200 CDI** 11/11 - 80 -115 kW	**22-220103** **22-220127**	**24-220118**	with standard chassis
MERCEDES-BENZ VANEO (414)				
B1	**1.4, 1.6, 1.7 CDI, 1.9** 02/02 - 55 -92 kW	**12-117314**		VA: with ball bearing
B4	**1.4, 1.6, 1.7 CDI, 1.9** 02/02 - 55 -92 kW	**22-053541**	**24-069366**	
MERCEDES-BENZ 190 (W201)				
B1	**2.0, 2.3, 2.3 E, 2.6, D 2.0, D 2.5, E 1.8, E 2.0, E 2.3, E 2.3-16, E 2.5-16, E 2.6, E Evolution II 2.5, Turbo-D 2.5** 10/82 - 08/93 53 -173 kW	**12-225828**		VA: without ball bearing
B3	**2.0** 10/82 - 05/90 66 -77 kW	**36-129768**	**36-129805**	with standard chassis
B3	**2.0** 10/82 - 05/90 66 -77 kW	**36-129751**	**36-129812**	with standard chassis; Heavy Duty Version .
B3	**2.0, 2.3, 2.3 E, 2.6, D 2.0, D 2.5, E 1.8, E 2.0, E 2.3, E 2.6** 10/82 - 12/89 53 -122 kW		**36-159369**	with standard chassis; with ride height adjustment
B3	**E 2.3-16, E 2.5-16** 04/84 - 08/93 125 -150 kW	**36-159383**		with standard chassis; with ride height adjustment
B3	**2.3, 2.3 E, 2.6, D 2.5, E 2.3, E 2.6** 09/86 - 12/89 66 -122 kW	**36-129775**	**36-129805**	with standard chassis
B3	**2.3, 2.3 E, 2.6, D 2.5, E 2.3, E 2.6** 09/86 - 12/89 66 -122 kW	**36-134496**	**36-129812**	with standard chassis; Heavy Duty Version .
B3	**D 2.0, E 1.8, E 2.0** 10/82 - 06/93 53 -93 kW	**36-129751**	**36-129805**	with standard chassis
B3	**D 2.0, E 1.8, E 2.0** 10/82 - 06/93 53 -93 kW	**36-129775**	**36-129812**	with standard chassis; Heavy Duty Version .
B4	**2.0, 2.3, 2.3 E, 2.6, D 2.0, D 2.5, E 1.8, E 2.0, E 2.3, E 2.6, Turbo-D 2.5** 10/82 - 08/93 53 -122 kW	**22-001993** **11-101406** SP **18-140651**	**24-014052**	with standard chassis HA: without ride height adjustment
B4	**2.0, 2.3, 2.3 E, 2.6, D 2.0, D 2.5, E 1.8, E 2.0, E 2.3, E 2.3-16, E 2.5-16, E 2.6, E Evolution II 2.5, Turbo-D 2.5** 10/82 - 08/93 53 -173 kW	**22-002006** **11-101406** SP **18-140651**	**24-013901**	mark: Sportline HA: without ride height adjustment
B4	**2.0, 2.3, 2.3 E, 2.6, D 2.0, D 2.5, E 1.8, E 2.0, E 2.3, E 2.3-16, E 2.5-16, E 2.6, E Evolution II 2.5, Turbo-D 2.5** 10/82 - 08/93 53 -173 kW	**22-003621** **11-101406** SP **18-140651**	**24-013840**	mark: Heavy Duty HA: without ride height adjustment

MERCEDES-BENZ				
MERCEDES-BENZ 190 (W201)				
B4	**2.0, 2.3, 2.3 E, 2.6, D 2.0, D 2.5, E 1.8, E 2.0, E 2.3, E 2.3-16, E 2.5-16, E 2.6, E Evolution II 2.5, Turbo-D 2.5** 10/82 - 08/93 53 -173 kW	**22-001924** **11-101406** SP **18-140651**	**24-013789**	mark: Tropen HA: without ride height adjustment
B6 Sport	**2.0, 2.3, 2.3 E, 2.6, D 2.0, D 2.5, E 1.8, E 2.0, E 2.3, E 2.3-16, E 2.5-16, E 2.6, E Evolution II 2.5, Turbo-D 2.5** 10/82 - 08/93 53 -173 kW	**22-100412**	**24-100427**	HA: without ride height adjustment
B8	**2.0, 2.3, 2.3 E, 2.6, D 2.0, D 2.5, E 1.8, E 2.0, E 2.3, E 2.3-16, E 2.5-16, E 2.6, E Evolution II 2.5, Turbo-D 2.5** 10/82 - 08/93 53 -173 kW	**22-003652**	**24-014700**	HA: without ride height adjustment
B12 PK	**2.0, 2.3, D 2.0, D 2.5, E 1.8, E 2.0, E 2.3, E 2.3-16, E 2.5-16** 10/82 - 08/93 53 -143 kW	**46-181404**		spring pads must be observed; without ride height adjustment; Conditions see certificates VA: lowering (expertise): 40 mm; axle load to: 880 kg HA: lowering (expertise): 30-40 mm; axle load to: 940 kg
MERCEDES-BENZ C-CLASS (W202)				
B3	**C 180** 09/93 - 12/95 89 -90 kW	**36-129461**	**36-133635**	with standard chassis; mark: Classic; mark: Elegance
B3	**C 180** 09/93 - 12/95 89 -90 kW	**36-129485**	**36-133642**	with standard chassis; mark: Esprit; mark: Sport
B3	**C 180** 01/96 - 05/00 89 -90 kW	**36-129638**	**36-133659**	with standard chassis; mark: Classic; mark: Elegance
B3	**C 180, C 200, C 200 CDI, C 200 D, C 220, C 230, C 240** 01/96 - 05/00 55 -125 kW	**36-129652**	**36-133666**	with standard chassis; mark: Esprit
B3	**C 180, C 200, C 200 CDI, C 200 D, C 220, C 230, C 240** 01/96 - 05/00 55 -125 kW	**36-129652**	**36-133673**	with standard chassis; mark: Sport
B3	**C 180** 01/96 - 05/00 89 kW	**36-129645**	**36-133680**	with standard chassis; Heavy Duty Version .; mark: Classic; mark: Elegance
B3	**C 180, C 200, C 200 CDI, C 200 D, C 220, C 220 CDI, C 220 D, C 230, C 240, C 250 Turbo-D, C 280** 01/96 - 05/00 55 -145 kW	**36-129645**	**36-133680**	with standard chassis; Heavy Duty Version .; mark: Esprit
B3	**C 180, C 200, C 200 CDI, C 200 D, C 220, C 220 CDI, C 220 D, C 230, C 240, C 250 Turbo-D, C 280** 01/96 - 05/00 55 -145 kW	**36-129645**	**36-133680**	with standard chassis; Heavy Duty Version .; mark: Sport
B3	**C 180** 09/93 - 12/95 89 -90 kW	**36-129478**	**36-133703**	with standard chassis; Heavy Duty Version .; mark: Classic; mark: Elegance
B3	**C 180** 03/93 - 12/95 89 -90 kW	**36-154012**	**36-154043**	with standard chassis; Heavy Duty Version .; mark: Esprit; mark: Sport
B3	**C 180** 09/93 - 12/95 89 -90 kW		**36-159604**	with standard chassis; mark: Esprit; mark: Sport; with ride height adjustment
B3	**C 180** 01/96 - 05/00 89 -90 kW		**36-159451**	with standard chassis; mark: Classic; mark: Elegance; with ride height adjustment
B3	**C 180, C 200, C 200 CDI, C 200 D, C 200 Kompressor, C 220, C 230, C 230 Kompressor, C 240** 01/96 - 05/00 55 -142 kW		**36-159451**	with standard chassis; mark: Esprit; with ride height adjustment
B3	**C 180, C 200, C 200 CDI, C 200 D, C 200 Kompressor, C 220, C 230, C 230 Kompressor, C 240** 01/96 - 05/00 55 -142 kW		**36-159451**	with standard chassis; mark: Sport; with ride height adjustment

MERCEDES-BENZ

MERCEDES-BENZ C-CLASS (W202)

B3	**C 200, C 220** 09/93 - 12/95 100 -110 kW	**36-129478**	**36-129508**	with standard chassis; mark: Classic; mark: Elegance
B3	**C 200, C 200 CDI, C 200 D, C 200 Kompressor, C 220 CDI, C 220 D, C 230 Kompressor, C 240** 01/96 - 05/00 55 -142 kW	**36-129638**	**36-133697**	with standard chassis; mark: Classic; mark: Elegance
B3	**C 200, C 200 CDI, C 200 D, C 200 Kompressor, C 220 CDI, C 220 D, C 230 Kompressor, C 240** 01/96 - 05/00 55 -142 kW	**36-129645**	**36-133680**	with standard chassis; Heavy Duty Version .; mark: Classic; mark: Elegance
B3	**C 200, C 220** 03/93 - 12/95 100 -110 kW	**36-154012**	**36-154043**	with standard chassis; mark: Esprit; mark: Sport
B3	**C 200** 01/94 - 12/95 100 kW	**37-129491**	**36-129515**	with standard chassis; Heavy Duty Version .; mark: Classic; mark: Elegance
B3	**C 200** 01/94 - 12/95 100 kW	**36-154029**	**36-133635**	with standard chassis; Heavy Duty Version .; mark: Esprit; mark: Sport
B3	**C 200, C 200 D, C 220, C 220 D** 09/93 - 12/95 55 -110 kW		**36-159611**	with standard chassis; mark: Classic; mark: Elegance; with ride height adjustment
B3	**C 200, C 220** 09/93 - 12/95 100 -110 kW	**36-154012**	**36-159604**	with standard chassis; mark: Esprit; mark: Sport; with ride height adjustment
B3	**C 200, C 200 CDI, C 200 D, C 200 Kompressor, C 220 CDI, C 220 D, C 230 Kompressor, C 240** 01/96 - 05/00 55 -142 kW		**36-159451**	with standard chassis; mark: Classic; mark: Elegance; with ride height adjustment
B3	**C 220** 03/93 - 12/95 110 kW	**37-129491**	**36-129515**	with standard chassis; Heavy Duty Version .; mark: Classic; mark: Elegance
B3	**C 200 D** 09/93 - 12/95 55 kW	**36-129478**	**36-133703**	with standard chassis; mark: Classic; mark: Elegance
B3	**C 200 D, C 220 D** 03/93 - 12/95 55 -70 kW	**37-129491**	**36-129508**	with standard chassis; Heavy Duty Version .; mark: Classic; mark: Elegance
B3	**C 200 D, C 220 D** 03/93 - 12/95 55 -70 kW	**36-154036**	**36-154043**	with standard chassis; Heavy Duty Version .; mark: Esprit; mark: Sport
B3	**C 200 D** 09/93 - 12/95 55 kW		**36-159604**	with standard chassis; mark: Esprit; mark: Sport; with ride height adjustment
B3	**C 220 CDI, C 220 D, C 250 Turbo-D, C 280** 01/96 - 05/00 55 -145 kW		**36-159451**	with standard chassis; mark: Esprit; with ride height adjustment
B3	**C 220 D, C 250 Turbo-D, C 280** 01/96 - 05/00 55 -145 kW	**36-154104**	**36-159451**	with standard chassis; mark: Sport; with ride height adjustment
B3	**C 220 D** 09/93 - 12/95 70 kW	**36-154029**	**36-159604**	with standard chassis; mark: Esprit; mark: Sport; with ride height adjustment
B3	**C 250 D, C 280** 09/93 - 12/95 83 -142 kW	**37-129491**	**36-129508**	with standard chassis; mark: Classic; mark: Elegance
B3	**C 250 D, C 280** 05/93 - 12/95 83 -142 kW	**36-134519**	**36-129515**	with standard chassis; Heavy Duty Version .; mark: Classic; mark: Elegance
B3	**C 250 D, C 280** 05/93 - 12/95 83 -142 kW	**36-154036**	**36-133635**	with standard chassis; mark: Esprit; mark: Sport
B3	**C 250 D, C 280** 05/93 - 12/95 83 -142 kW	**36-159574**	**36-133703**	with standard chassis; Heavy Duty Version .; mark: Esprit; mark: Sport

MERCEDES-BENZ				
MERCEDES-BENZ C-CLASS (W202)				
B3	**C 250 D, C 280** 09/93 - 12/95 83 -142 kW		**36-159598**	with standard chassis; mark: Classic; mark: Elegance; with ride height adjustment
B3	**C 250 D, C 280** 09/93 - 12/95 83 -142 kW		**36-159581**	with standard chassis; mark: Esprit; mark: Sport; with ride height adjustment
B3	**C 250 Turbo-D, C 280** 01/96 - 05/00 110 -145 kW	**36-129645**	**36-133680**	with standard chassis; Heavy Duty Version .; mark: Classic; mark: Elegance
B3	**C 250 Turbo-D, C 280** 01/96 - 05/00 110 -145 kW	**36-154074**	**36-159451**	with standard chassis; mark: Classic; mark: Elegance; with ride height adjustment
B4	**C 180, C 200, C 200 CDI, C 200 D, C 200 Kompressor, C 220, C 220 CDI, C 220 D, C 230, C 230 Kompressor, C 240, C 250 D, C 250 Turbo-D, C 280** 05/93 - 05/00 55 -145 kW	**24-018562** **18-140651**	**24-018579**	with standard chassis
B6 Sport	**C 180, C 200, C 200 CDI, C 200 D, C 200 Kompressor, C 220, C 220 CDI, C 220 D, C 230, C 230 Kompressor, C 240, C 250 D, C 250 Turbo-D, C 280** 05/93 - 05/00 55 -145 kW	**24-100397**	**24-100403**	
B8	**C 180, C 200, C 200 CDI, C 200 D, C 200 Kompressor, C 220, C 220 CDI, C 220 D, C 230, C 230 Kompressor, C 240, C 250 D, C 250 Turbo-D, C 280** 05/93 - 05/00 55 -145 kW	**24-018548**	**24-018555**	
B12 PK	**C 180, C 200, C 200 D, C 200 Kompressor, C 220, C 220 D, C 230 Kompressor** 08/93 - 05/00 55 -142 kW	**46-181701**		spring pads must be observed; without ride height adjustment; Conditions see certificates VA: lowering (expertise): 30 mm; axle load to: 970 kg HA: lowering (expertise): 30 mm; axle load to: 1030 kg
B12 PK	**C 180, C 200, C 200 CDI, C 200 Kompressor, C 220 CDI, C 220 D, C 230** 08/93 - 05/00 70 -132 kW	**46-181725**		spring pads must be observed; without ride height adjustment; Conditions see certificates VA: lowering (expertise): 30 mm; axle load to: 990 kg HA: lowering (expertise): 30 mm; axle load to: 1070 kg
B12 PK	**C 230 Kompressor, C 240, C 250 D, C 250 Turbo-D, C 280** 05/93 - 05/00 83 -145 kW	**46-181732**		spring pads must be observed; without ride height adjustment; Conditions see certificates VA: lowering (expertise): 30 mm; axle load to: 1010 kg HA: lowering (expertise): 30 mm; axle load to: 1070 kg
B12 SL	**C 180, C 200, C 200 CDI, C 200 D, C 200 Kompressor, C 220, C 220 D, C 230, C 230 Kompressor, C 240** 08/93 - 05/00 55 -142 kW	**46-181749**		spring pads must be observed; without ride height adjustment; Conditions see certificates VA: lowering (expertise): 45-50 mm; axle load to: 1010 kg HA: lowering (expertise): 30-35 mm; axle load to: 1070 kg
MERCEDES-BENZ C-CLASS Estate (S202)				
B3	**C 180 T** 06/96 - 03/01 90 -95 kW	**36-129485**	**36-133659**	with standard chassis; mark: Classic; mark: Elegance
B3	**C 180 T** 06/96 - 03/01 90 -95 kW	**36-129485**	**36-163816**	with standard chassis; mark: Classic; mark: Elegance; with ride height adjustment
B3	**C 180 T, C 200 T, C 200 T CDI, C 200 T D, C 200 T Kompressor, C 230 T, C 230 T Kompressor, C 240 T** 06/96 - 03/01 65 -142 kW	**36-129652**	**36-133659**	with standard chassis; mark: Esprit; mark: Sport
B3	**C 180 T, C 200 T, C 200 T CDI, C 200 T D, C 200 T Kompressor, C 230 T, C 230 T Kompressor, C 240 T** 06/96 - 03/01 65 -142 kW	**36-129652**	**36-163816**	with standard chassis; mark: Esprit; mark: Sport; with ride height adjustment
B3	**C 180 T, C 200 T, C 200 T CDI, C 200 T D, C 200 T Kompressor, C 220 T CDI, C 220 T D, C 230 T, C 230 T Kompressor, C 240 T, C 250 T Turbo-D, C 280 T** 06/96 - 03/01 55 -145 kW	**36-129645**		with standard chassis; Heavy Duty Version .

M

MERCEDES-BENZ				
MERCEDES-BENZ C-CLASS Estate (S202)				
B3	**C 200 T, C 200 T CDI, C 200 T D, C 200 T Kompressor, C 220 T CDI, C 220 T D, C 230 T Kompressor, C 240 T** 06/96 - 03/01 55 -142 kW	**36-129638**	**36-133659**	with standard chassis; mark: Classic; mark: Elegance
B3	**C 200 T, C 200 T CDI, C 200 T D, C 200 T Kompressor, C 220 T CDI, C 220 T D, C 230 T Kompressor, C 240 T** 06/96 - 03/01 55 -142 kW	**36-129638**	**36-163816**	with standard chassis; mark: Classic; mark: Elegance; with ride height adjustment
B3	**C 220 T CDI, C 220 T D, C 250 T Turbo-D, C 280 T** 06/97 - 03/01 55 -145 kW	**36-129645**	**36-133659**	with standard chassis; mark: Esprit
B3	**C 220 T CDI, C 220 T D, C 250 T Turbo-D, C 280 T** 06/97 - 03/01 55 -145 kW	**36-154104**	**36-133659**	with standard chassis; mark: Sport
B3	**C 220 T CDI, C 220 T D, C 250 T Turbo-D, C 280 T** 06/97 - 03/01 55 -145 kW	**36-154104**	**36-163816**	with standard chassis; mark: Sport; with ride height adjustment
B3	**C 250 T Turbo-D, C 280 T** 06/96 - 03/01 110 -145 kW	**36-154074**	**36-133659**	with standard chassis; mark: Classic; mark: Elegance
B3	**C 250 T Turbo-D, C 280 T** 06/96 - 03/01 110 -145 kW	**36-154074**	**36-163816**	with standard chassis; mark: Classic; mark: Elegance; with ride height adjustment
B4	**C 180 T, C 200 T, C 200 T CDI, C 200 T D, C 200 T Kompressor, C 220 T CDI, C 220 T D, C 230 T, C 230 T Kompressor, C 240 T, C 250 T Turbo-D, C 280 T** 06/96 - 03/01 55 -145 kW	**24-018562** **18-140651**	**24-018579**	without ride height adjustment
B6 Sport	**C 180 T, C 200 T, C 200 T CDI, C 200 T D, C 200 T Kompressor, C 220 T CDI, C 220 T D, C 230 T, C 230 T Kompressor, C 240 T, C 250 T Turbo-D, C 280 T** 06/96 - 03/01 55 -145 kW	**24-100397**	**24-100403**	without ride height adjustment
B8	**C 180 T, C 200 T, C 200 T CDI, C 200 T D, C 200 T Kompressor, C 220 T CDI, C 220 T D, C 230 T, C 230 T Kompressor, C 240 T, C 250 T Turbo-D, C 280 T** 06/96 - 03/01 55 -145 kW	**24-018548**	**24-018555**	without ride height adjustment
B12 PK	**C 180 T, C 200 T, C 200 T CDI, C 200 T D, C 200 T Kompressor, C 220 T CDI, C 220 T D, C 230 T** 06/96 - 03/01 55 -141 kW	**46-193902**		without ride height adjustment; Conditions see certificates VA: lowering (expertise): 30 mm; axle load to: 990 kg HA: lowering (expertise): 30 mm; axle load to: 1070 kg
B12 PK	**C 230 T Kompressor, C 240 T, C 250 T Turbo-D, C 280 T** 06/96 - 03/01 110 -145 kW	**46-193919**		without ride height adjustment; Conditions see certificates VA: lowering (expertise): 30 mm; axle load to: 1010 kg HA: lowering (expertise): 30 mm; axle load to: 1070 kg
MERCEDES-BENZ C-CLASS (W203)				
B1	**C 180, C 180 Kompressor, C 200 CDI, C 200 CGI Kompressor, C 200 Kompressor, C 220 CDI, C 230, C 230 Kompressor, C 240, C 270 CDI, C 280, C 3.5, C 320, C 320 CDI, C 350** 05/00 - 75 -200 kW	**12-224159**		VA: with ball bearing
B3	**C 180, C 180 Kompressor, C 200 Kompressor, C 230 Kompressor** 05/00 - 95 -141 kW	**37-133719**	**36-129690**	with standard chassis

M

MERCEDES-BENZ				
MERCEDES-BENZ C-CLASS (W203)				
B3	**C 180, C 180 Kompressor, C 200 CDI, C 200 CGI Kompressor, C 200 Kompressor, C 230, C 230 Kompressor, C 240, C 280, C 320, C 350** 05/00 - 75 -200 kW	**37-133740**	**36-133680**	with standard chassis; Heavy Duty Version .
B3	**C 200 CGI Kompressor** 07/03 - 125 kW	**37-133719**	**36-129690**	with standard chassis
B3	**C 230, C 280, C 3.5, C 350** 01/05 - 150 -200 kW	**37-133726**	**36-129690**	with standard chassis
B3	**C 240, C 320** 05/00 - 125 -160 kW	**37-133726**	**36-129690**	with standard chassis
B3	**C 200 CDI, C 220 CDI** 05/00 - 04/04 75 -105 kW	**37-133733**	**36-129690**	with standard chassis
B3	**C 220 CDI** 04/04 - 105 kW	**37-133726**	**36-129690**	with standard chassis
B3	**C 220 CDI** 05/00 - 105 -110 kW	**37-133740**	**36-133680**	with standard chassis; Heavy Duty Version .
B3	**C 220 CDI** 02/04 - 110 kW	**37-133726**	**36-129690**	with standard chassis
B3	**C 270 CDI, C 320 CDI** 12/00 - 125 -165 kW	**37-133740**	**36-129690**	with standard chassis
B4	**C 180, C 180 Kompressor, C 200 CDI, C 200 CGI Kompressor, C 200 Kompressor, C 220 CDI, C 230, C 230 Kompressor, C 240, C 270 CDI, C 280, C 3.5, C 320, C 320 CDI, C 350** 05/00 - 75 -200 kW	**22-141705**	**24-114714**	with standard chassis
B4	**C 180, C 180 Kompressor, C 200 CDI, C 200 CGI Kompressor, C 200 Kompressor, C 220 CDI, C 230, C 230 Kompressor, C 240, C 270 CDI, C 280, C 3.5, C 320, C 320 CDI, C 350** 05/00 - 75 -200 kW	**22-168061**	**24-188111**	with off-road suspension
B4	**C 180, C 180 Kompressor, C 200 CDI, C 200 CGI Kompressor, C 200 Kompressor, C 220 CDI, C 230, C 230 Kompressor, C 240, C 270 CDI, C 280, C 3.5, C 320, C 320 CDI, C 350** 05/00 - 75 -200 kW	**22-168085**	**24-114714**	with sports suspension VA: for OE Number 203 320 66 30
B4	**C 180, C 180 Kompressor, C 200 CDI, C 200 CGI Kompressor, C 200 Kompressor, C 220 CDI, C 230, C 230 Kompressor, C 240, C 270 CDI, C 280, C 3.5, C 320, C 320 CDI, C 350** 05/00 - 75 -200 kW	**22-218537**	**24-114714**	with sports suspension VA: for OE Number 203 320 75 30
B6 Sport	**C 180, C 180 Kompressor, C 200 CDI, C 200 CGI Kompressor, C 200 Kompressor, C 220 CDI, C 230, C 230 Kompressor, C 240, C 270 CDI, C 280, C 3.5, C 320, C 320 CDI, C 350** 05/00 - 75 -200 kW	**35-053446**	**24-068802**	with standard chassis; without ride height adjustment
B8	**C 180, C 180 Kompressor, C 200 CDI, C 200 CGI Kompressor, C 200 Kompressor, C 220 CDI, C 230, C 230 Kompressor, C 240, C 270 CDI, C 280, C 3.5, C 30 CDI AMG, C 32 AMG Kompressor, C 320, C 320 CDI, C 350, C 55 AMG** 05/00 - 75 -270 kW	**35-053453**	**24-068819**	with sports suspension; without ride height adjustment

M

MERCEDES-BENZ

MERCEDES-BENZ C-CLASS (W203)

B12 PK	**C 180, C 180 Kompressor, C 200 CDI, C 200 CGI Kompressor, C 200 Kompressor, C 220 CDI, C 230, C 230 Kompressor** 05/00 - 75 -150 kW	**46-181800**		spring pads must be observed; Conditions see certificates VA: lowering (expertise): 30 mm; axle load to: 1035 kg HA: without ride height adjustment; lowering (expertise): 30 mm; axle load to: 1170 kg
B12 PK	**C 240, C 270 CDI, C 280, C 3.5, C 320, C 320 CDI, C 350** 05/00 - 125 -200 kW	**46-181817**		spring pads must be observed; Conditions see certificates VA: lowering (expertise): 30 mm; axle load to: 1130 kg HA: without ride height adjustment; lowering (expertise): 30 mm; axle load to: 1170 kg
B14	**C 180, C 180 Kompressor, C 200 CDI, C 200 CGI Kompressor, C 200 Kompressor, C 220 CDI, C 230, C 230 Kompressor, C 240, C 270 CDI, C 280, C 3.5, C 30 CDI AMG, C 32 AMG Kompressor, C 320, C 320 CDI, C 350, C 55 AMG** 05/00 - 75 -270 kW	**47-100770**		Spacers required for several wheel/tyre combinations; with standard chassis; without ride height adjustment; Conditions see certificates VA: lowering (expertise): 30-50 mm; axle load to: 1130 kg HA: lowering (expertise): 30-50 mm; axle load to: 1155 kg
B16 PSS9	**C 180, C 180 Kompressor, C 200 CDI, C 200 CGI Kompressor, C 200 Kompressor, C 220 CDI, C 230, C 230 Kompressor, C 240, C 270 CDI, C 280, C 3.5, C 30 CDI AMG, C 32 AMG Kompressor, C 320, C 320 CDI, C 350, C 55 AMG** 05/00 - 75 -270 kW	**48-088602**		Spacers required for several wheel/tyre combinations; with standard chassis; without ride height adjustment; Conditions see certificates VA: lowering (expertise): 30-50 mm; axle load to: 1130 kg HA: lowering (expertise): 30-50 mm; axle load to: 1155 kg

MERCEDES-BENZ C-CLASS T-Model (S203)

B1	**C 180, C 180 Kompressor, C 200 CDI, C 200 CGI Kompressor, C 200 Kompressor, C 220 CDI, C 230, C 230 Kompressor, C 240, C 270 CDI, C 280, C 320, C 320 CDI, C 350** 03/01 - 08/07 75 -200 kW	**12-224159**		VA: with ball bearing
B3	**C 180 Kompressor, C 200 CDI** 05/04 - 08/07 75 -105 kW	**37-133733**	**36-154166**	with standard chassis
B3	**C 180, C 180 Kompressor, C 200 CGI Kompressor, C 200 Kompressor, C 230 Kompressor** 03/01 - 04/04 95 -141 kW	**37-133719**	**36-154166**	with standard chassis
B3	**C 180, C 180 Kompressor, C 200 CDI, C 200 CGI Kompressor, C 200 Kompressor, C 220 CDI, C 230, C 230 Kompressor, C 240, C 280, C 320, C 350** 03/01 - 08/07 75 -200 kW	**37-133740**	**36-163793**	with standard chassis; Heavy Duty Version .
B3	**C 200 Kompressor** 05/04 - 08/07 120 kW	**37-133719**	**36-154166**	with standard chassis
B3	**C 240, C 320** 03/01 - 04/04 125 -160 kW	**37-133726**	**36-154166**	with standard chassis
B3	**C 240 4-matic, C 320 4-matic** 07/02 - 04/04 125 -160 kW	**37-133740**	**36-154166**	with standard chassis
B3	**C 280 4-matic, C 320 4-matic, C 320 CDI, C 350 4-matic** 04/04 - 08/07 160 -200 kW	**37-133740**	**36-154166**	with standard chassis
B3	**C 200 CDI, C 220 CDI** 03/01 - 04/04 75 -110 kW	**37-133733**	**36-154166**	with standard chassis
B3	**C 220 CDI, C 230, C 230 Kompressor, C 240, C 280, C 320, C 350** 05/04 - 08/07 105 -200 kW	**37-133726**	**36-154166**	with standard chassis
B3	**C 270 CDI** 03/01 - 04/04 125 kW	**37-133740**	**36-154166**	with standard chassis

MERCEDES-BENZ

MERCEDES-BENZ C-CLASS T-Model (S203)

B4	**C 180, C 180 Kompressor, C 200 CDI, C 200 CGI Kompressor, C 200 Kompressor, C 220 CDI, C 230, C 230 Kompressor, C 240, C 270 CDI, C 280, C 320, C 320 CDI, C 350** 03/01 - 08/07 75 -200 kW	**22-141705**	**24-114714**	with standard chassis; without ride height adjustment
B4	**C 180, C 180 Kompressor, C 200 CDI, C 200 CGI Kompressor, C 200 Kompressor, C 220 CDI, C 230, C 230 Kompressor, C 240, C 270 CDI, C 280, C 320, C 320 CDI, C 350** 03/01 - 08/07 75 -200 kW	**22-168061**	**24-188111**	with off-road suspension
B4	**C 180, C 180 Kompressor, C 200 CDI, C 200 CGI Kompressor, C 200 Kompressor, C 220 CDI, C 230, C 230 Kompressor, C 240, C 270 CDI, C 280, C 320, C 320 CDI, C 350** 03/01 - 08/07 75 -200 kW	**22-168085**	**24-114714**	with sports suspension VA: for OE Number 203 320 66 30
B4	**C 180, C 180 Kompressor, C 200 CDI, C 200 CGI Kompressor, C 200 Kompressor, C 220 CDI, C 230, C 230 Kompressor, C 240, C 270 CDI, C 280, C 320, C 320 CDI, C 350** 03/01 - 08/07 75 -200 kW	**22-218537**	**24-114714**	with sports suspension VA: for OE Number 203 320 75 30
B6 Sport	**C 180, C 180 Kompressor, C 200 CDI, C 200 CGI Kompressor, C 200 Kompressor, C 220 CDI, C 230, C 230 Kompressor, C 240, C 270 CDI, C 280, C 320, C 320 CDI, C 350** 03/01 - 08/07 75 -200 kW	**35-053446**	**24-068802**	with standard chassis; without ride height adjustment
B8	**C 180, C 180 Kompressor, C 200 CDI, C 200 CGI Kompressor, C 200 Kompressor, C 220 CDI, C 230, C 230 Kompressor, C 240, C 270 CDI, C 280, C 30 CDI AMG, C 32 AMG Kompressor, C 320, C 320 CDI, C 350, C 55 AMG** 03/01 - 08/07 75 -270 kW	**35-053453**	**24-068819**	with sports suspension; without off-road suspension; without ride height adjustment
B12 PK	**C 180, C 180 Kompressor, C 200 CDI, C 200 Kompressor, C 220 CDI, C 230, C 230 Kompressor** 03/01 - 08/07 75 -150 kW	**46-181824**		spring pads must be observed; without off-road suspension; without ride height adjustment; Conditions see certificates VA: lowering (expertise): 30 mm; axle load to: 1015 kg HA: lowering (expertise): 30 mm; axle load to: 1170 kg
B12 PK	**C 240, C 270 CDI, C 280, C 320, C 320 CDI, C 350** 03/01 - 08/07 125 -200 kW	**46-181831**		spring pads must be observed; without off-road suspension; without ride height adjustment; Conditions see certificates VA: lowering (expertise): 30 mm; axle load to: 1090 kg HA: lowering (expertise): 30 mm; axle load to: 1170 kg
B14	**C 180, C 180 Kompressor, C 200 CDI, C 200 CGI Kompressor, C 200 Kompressor, C 220 CDI, C 230, C 230 Kompressor, C 240, C 270 CDI, C 280, C 30 CDI AMG, C 32 AMG Kompressor, C 320, C 320 CDI, C 350, C 55 AMG** 03/01 - 08/07 75 -270 kW	**47-100770**		Spacers required for several wheel/tyre combinations; without ride height adjustment; Conditions see certificates VA: lowering (expertise): 30-50 mm; axle load to: 1130 kg HA: lowering (expertise): 30-50 mm; axle load to: 1155 kg
B16 PSS9	**C 180, C 180 Kompressor, C 200 CDI, C 200 CGI Kompressor, C 200 Kompressor, C 220 CDI, C 230, C 230 Kompressor, C 240, C 270 CDI, C 280, C 30 CDI AMG, C 32 AMG Kompressor, C 320, C 320 CDI, C 350, C 55 AMG** 03/01 - 08/07 75 -270 kW	**48-088602**		Spacers required for several wheel/tyre combinations; without ride height adjustment; Conditions see certificates VA: lowering (expertise): 50 mm; axle load to: 1130 kg HA: lowering (expertise): 50 mm; axle load to: 1155 kg

MERCEDES-BENZ

MERCEDES-BENZ C-CLASS Coupe (CL203)

B1	**C 160 Kompressor, C 180, C 180 Kompressor,** **C 200 CDI, C 200 CGI Kompressor,** **C 200 Kompressor, C 220, C 220 CDI,** **C 230, C 230 Kompressor, C 320, C 350** 03/01 - 06/11 90 -200 kW	**12-224159**		VA: with ball bearing
B3	**C 160 Kompressor, C 180, C 180 Kompressor,** **C 200 CDI, C 200 CGI Kompressor,** **C 200 Kompressor, C 220, C 230 Kompressor** 03/01 - 06/11 90 -141 kW	**37-154172**	**36-133659**	with standard chassis
B3	**C 160 Kompressor, C 180, C 180 Kompressor,** **C 200 CGI Kompressor, C 200 Kompressor,** **C 220, C 230 Kompressor** 03/01 - 06/11 90 -141 kW	**37-154189**	**36-154166**	with standard chassis; Heavy Duty Version .
B3	**C 200 CDI, C 220 CDI, C 230,** **C 230 Kompressor, C 350** 03/01 - 06/11 90 -200 kW		**36-154166**	with standard chassis; Heavy Duty Version .
B3	**C 220 CDI, C 230, C 230 Kompressor, C 350** 03/01 - 06/11 105 -200 kW	**37-154189**	**36-133659**	with standard chassis
B4	**C 160 Kompressor, C 180, C 180 Kompressor,** **C 200 CDI, C 200 CGI Kompressor,** **C 200 Kompressor, C 220, C 220 CDI,** **C 230, C 230 Kompressor, C 320, C 350** 03/01 - 06/11 90 -200 kW	**22-141705**	**24-114714**	with standard chassis
B4	**C 160 Kompressor, C 180, C 180 Kompressor,** **C 200 CDI, C 200 CGI Kompressor,** **C 200 Kompressor, C 220, C 220 CDI,** **C 230, C 230 Kompressor, C 320, C 350** 03/01 - 06/11 90 -200 kW	**22-168085**	**24-114714**	with sports suspension VA: for OE Number 203 320 66 30
B4	**C 160 Kompressor, C 180, C 180 Kompressor,** **C 200 CDI, C 200 CGI Kompressor,** **C 200 Kompressor, C 220, C 220 CDI,** **C 230, C 230 Kompressor, C 320, C 350** 03/01 - 06/11 90 -200 kW	**22-218537**	**24-114714**	with sports suspension VA: for OE Number 203 320 75 30
B6 Sport	**C 160 Kompressor, C 180, C 180 Kompressor,** **C 200 CDI, C 200 CGI Kompressor,** **C 200 Kompressor, C 220, C 220 CDI,** **C 230, C 230 Kompressor, C 320, C 350** 03/01 - 06/11 90 -200 kW	**35-053446**	**24-068802**	with standard chassis; without ride height adjustment
B8	**C 160 Kompressor, C 180, C 180 Kompressor,** **C 200 CDI, C 200 CGI Kompressor,** **C 200 Kompressor, C 220, C 220 CDI,** **C 230, C 230 Kompressor, C 30 CDI AMG,** **C 32 AMG Kompressor, C 320, C 350** 03/01 - 06/11 90 -260 kW	**35-053453**	**24-068819**	with standard chassis; without ride height adjustment
B12 PK	**C 160 Kompressor, C 180, C 180 Kompressor,** **C 200 CGI Kompressor, C 200 Kompressor,** **C 230, C 230 Kompressor** 03/01 - 06/11 90 -150 kW	**46-190475**		without ride height adjustment; Conditions see certificates VA: lowering (expertise): 25-30 mm; axle load to: 1070 kg HA: lowering (expertise): 20-25 mm; axle load to: 1035 kg
B12 PK	**C 200 CDI, C 220 CDI, C 320, C 350** 09/02 - 06/11 90 -200 kW	**46-190482**		without ride height adjustment; Conditions see certificates VA: lowering (expertise): 25-30 mm; axle load to: 1100 kg HA: lowering (expertise): 20-25 mm; axle load to: 1035 kg

MERCEDES-BENZ				
MERCEDES-BENZ C-CLASS Coupe (CL203)				
B14	**C 160 Kompressor, C 180, C 180 Kompressor, C 200 CDI, C 200 CGI Kompressor, C 200 Kompressor, C 220, C 220 CDI, C 230, C 230 Kompressor, C 30 CDI AMG, C 32 AMG Kompressor, C 320, C 350** 03/01 - 06/11 90 -260 kW	**47-100770**		Spacers required for several wheel/tyre combinations; with standard chassis; without ride height adjustment; Conditions see certificates VA: lowering (expertise): 30-50 mm; axle load to: 1130 kg HA: lowering (expertise): 30-50 mm; axle load to: 1155 kg
B16 PSS9	**C 160 Kompressor, C 180, C 180 Kompressor, C 200 CDI, C 200 CGI Kompressor, C 200 Kompressor, C 220, C 220 CDI, C 230, C 230 Kompressor, C 30 CDI AMG, C 32 AMG Kompressor, C 320, C 350** 03/01 - 06/11 90 -260 kW	**48-088602**		Spacers required for several wheel/tyre combinations; with standard chassis; without ride height adjustment; Conditions see certificates VA: lowering (expertise): 30-50 mm; axle load to: 1130 kg HA: lowering (expertise): 30-50 mm; axle load to: 1155 kg
MERCEDES-BENZ CLC-CLASS				
B1	**CLC 160, CLC 180 Kompressor, CLC 200 CDI, CLC 200 Kompressor, CLC 220 CDI, CLC 230, CLC 350** 05/08 - 90 -200 kW	**12-224159**		VA: with ball bearing
B3	**CLC 180 Kompressor, CLC 200 Kompressor** 05/08 - 105 -135 kW	**37-133719**	**36-171989**	with standard chassis
B3	**CLC 180 Kompressor, CLC 200 Kompressor** 05/08 - 105 -135 kW	**37-173425**	**36-171989**	with standard chassis; Heavy Duty Version .
B3	**CLC 350** 05/08 - 200 kW	**37-133733**	**36-171989**	with standard chassis
B3	**CLC 200 CDI, CLC 230** 05/08 - 90 -150 kW	**37-173425**	**36-171989**	with standard chassis; without AC; manual transmission
B3	**CLC 200 CDI, CLC 230** 05/08 - 90 -150 kW	**37-133733**	**36-171989**	with standard chassis; with AC; automatic transmission
B3	**CLC 200 CDI, CLC 230** 05/08 - 90 -150 kW	**37-133733**	**36-171989**	with standard chassis; Heavy Duty Version .; without AC; manual transmission
B3	**CLC 220 CDI** 05/08 - 110 kW	**37-173425**	**36-171989**	with standard chassis
B3	**CLC 220 CDI** 05/08 - 110 kW	**37-133733**	**36-171989**	with standard chassis; Heavy Duty Version .
B4	**CLC 160, CLC 180 Kompressor, CLC 200 CDI, CLC 200 Kompressor, CLC 220 CDI, CLC 230, CLC 350** 05/08 - 90 -200 kW	**22-141705**	**24-114714**	with standard chassis
B4	**CLC 160, CLC 180 Kompressor, CLC 200 CDI, CLC 200 Kompressor, CLC 220 CDI, CLC 230, CLC 350** 05/08 - 90 -200 kW	**22-168061**	**24-188111**	with off-road suspension
B4	**CLC 160, CLC 180 Kompressor, CLC 200 CDI, CLC 200 Kompressor, CLC 220 CDI, CLC 230, CLC 350** 05/08 - 90 -200 kW	**22-168085**	**24-114714**	with sports suspension VA: for OE Number 203 320 66 30
B4	**CLC 160, CLC 180 Kompressor, CLC 200 CDI, CLC 200 Kompressor, CLC 220 CDI, CLC 230, CLC 350** 05/08 - 90 -200 kW	**22-218537**	**24-114714**	with sports suspension VA: for OE Number 203 320 75 30
B6 Sport	**CLC 160, CLC 180 Kompressor, CLC 200 CDI, CLC 200 Kompressor, CLC 220 CDI, CLC 230, CLC 350** 05/08 - 90 -200 kW	**35-053446**	**24-068802**	with standard chassis; without ride height adjustment

M

MERCEDES-BENZ				
MERCEDES-BENZ CLC-CLASS				
B8	**CLC 160, CLC 180 Kompressor, CLC 200 CDI, CLC 200 Kompressor, CLC 220 CDI, CLC 230, CLC 350** 05/08 - 90 -200 kW	**35-053453**	**24-068819**	with standard chassis; without ride height adjustment
B12 PK	**CLC 180 Kompressor, CLC 200 Kompressor, CLC 230** 05/08 - 105 -150 kW	**46-190475**		without ride height adjustment; Conditions see certificates VA: lowering (expertise): 25-30 mm; axle load to: 1070 kg HA: lowering (expertise): 20-25 mm; axle load to: 1035 kg
B12 PK	**CLC 200 CDI, CLC 220 CDI, CLC 350** 05/08 - 90 -200 kW	**46-190482**		without ride height adjustment; Conditions see certificates VA: lowering (expertise): 25-30 mm; axle load to: 1100 kg HA: lowering (expertise): 20-25 mm; axle load to: 1035 kg
B14	**CLC 160, CLC 180 Kompressor, CLC 200 CDI, CLC 200 Kompressor, CLC 220 CDI, CLC 230, CLC 350** 05/08 - 90 -200 kW	**47-100770**		Spacers required for several wheel/tyre combinations; with standard chassis; without ride height adjustment; Conditions see certificates VA: lowering (expertise): 30-50 mm; axle load to: 1130 kg HA: lowering (expertise): 30-50 mm; axle load to: 1155 kg
B16 PSS9	**CLC 160, CLC 180 Kompressor, CLC 200 CDI, CLC 200 Kompressor, CLC 220 CDI, CLC 230, CLC 350** 05/08 - 90 -200 kW	**48-088602**		Spacers required for several wheel/tyre combinations; with standard chassis; without ride height adjustment; Conditions see certificates VA: lowering (expertise): 30-50 mm; axle load to: 1130 kg HA: lowering (expertise): 30-50 mm; axle load to: 1155 kg
MERCEDES-BENZ C CLASS (W204)				
B1	**C 180 CDI, C 180 CGI, C 180 Kompressor, C 200 CDI, C 200 CGI, C 200 Kompressor, C 220 CDI, C 230, C 230 4-matic, C 250 CDI, C 250 CDI 4-matic, C 250 CGI, C 280, C 280 4-matic, C 300, C 300 4-matic, C 320 CDI, C 320 CDI 4-matic, C 350, C 350 4-matic, C 350 CDI, C 350 CDI 4-matic, C 350 CGI, C 63 AMG** 02/08 - 88 -358 kW	**12-225835**	**12-224623**	VA: with ball bearing; without electronic suspension control; without sport chassis
B1	**C 180 CDI, C 180 CGI, C 180 Kompressor, C 200 CDI, C 200 CGI, C 200 Kompressor, C 220 CDI, C 230, C 230 4-matic, C 250 CDI, C 250 CDI 4-matic, C 250 CGI, C 280, C 280 4-matic, C 300, C 300 4-matic, C 320 CDI, C 320 CDI 4-matic, C 350, C 350 4-matic, C 350 CDI, C 350 CDI 4-matic, C 350 CGI, C 63 AMG** 02/08 - 88 -358 kW	**12-225842**	**12-224623**	VA: with ball bearing; with electronic suspension control; with sports suspension
B3	**C 230, C 280, C 300** 01/07 - 150 -170 kW	**37-172299**	**36-171835**	with standard chassis
B3	**C 230, C 280, C 300** 01/07 - 150 -170 kW	**37-172305**	**36-171859**	with standard chassis; Heavy Duty Version .
B3	**C 230, C 280, C 300** 01/07 - 150 -170 kW	**37-172336**	**36-171873**	with sports suspension
B3	**C 230, C 280, C 300** 01/07 - 150 -170 kW	**37-172350**	**36-171897**	with sports suspension; Heavy Duty Version .
B3	**C 230 4-matic** 07/07 - 150 kW	**36-198351**	**36-171859**	with standard chassis; Heavy Duty Version .
B3	**C 280 4-matic, C 300 4-matic** 07/07 - 170 kW	**36-198351**	**36-171859**	with standard chassis
B3	**C 180 CDI, C 180 CGI, C 180 Kompressor, C 200, C 200 CDI, C 200 CGI, C 200 Kompressor, C 220 CDI, C 250 CGI** 07/09 - 88 -150 kW	**37-171827**	**36-171835**	with standard chassis

MERCEDES-BENZ

MERCEDES-BENZ C CLASS (W204)

B3	**C 180 CDI, C 180 CGI, C 180 Kompressor, C 200, C 200 CDI, C 200 CGI, C 200 Kompressor, C 220 CDI, C 250 CGI** 07/09 - 88 -150 kW	**37-171841**	**36-171859**	with standard chassis; Heavy Duty Version .
B3	**C 180 CDI, C 180 CGI, C 180 Kompressor, C 200, C 200 CDI, C 200 CGI, C 200 Kompressor, C 220 CDI, C 250 CGI** 07/09 - 88 -150 kW	**37-171865**	**36-171873**	with sports suspension
B3	**C 180 CDI, C 180 CGI, C 180 Kompressor, C 200, C 200 CDI, C 200 CGI, C 200 Kompressor, C 220 CDI, C 250 CGI** 07/09 - 88 -150 kW	**37-171889**	**36-171897**	with sports suspension; Heavy Duty Version .
B3	**C 250 CDI** 08/08 - 150 kW	**37-129491**	**36-171835**	with standard chassis; equipment: mit BlueEFFICIENCY
B3	**C 250 CDI** 08/08 - 150 kW	**37-172312**	**36-171859**	with standard chassis; Heavy Duty Version .; equipment: mit BlueEFFICIENCY
B3	**C 250 CDI** 08/08 - 150 kW	**37-172367**	**36-171873**	with sports suspension; equipment: mit BlueEFFICIENY
B3	**C 250 CDI** 08/08 - 150 kW	**37-172374**	**36-171897**	with sports suspension; Heavy Duty Version .; equipment: mit BlueEFFICIENCY
B3	**C 320 CDI, C 350 CDI** 01/07 - 165 -195 kW	**37-172312**	**36-171859**	with standard chassis
B3	**C 320 CDI, C 350 CDI** 01/07 - 165 -195 kW	**37-172329**	**36-172283**	with standard chassis; Heavy Duty Version .
B3	**C 320 CDI, C 350 CDI** 01/07 - 165 -195 kW	**37-172374**	**36-171897**	with sports suspension
B3	**C 320 CDI, C 350 CDI** 01/07 - 165 -195 kW	**37-172343**	**36-171897**	with sports suspension; Heavy Duty Version .
B4 DMC	**C 230 4-matic, C 250 CDI 4-matic, C 280 4-matic, C 300 4-matic, C 300 CDI 4-matic, C 320 CDI 4-matic, C 350 4-matic, C 350 CDI 4-matic** 07/07 - 150 -225 kW	**i.V.**	**24-166218**	with standard chassis
B4 DMC	**C 230 4-matic, C 250 CDI 4-matic, C 280 4-matic, C 300 4-matic, C 300 CDI 4-matic, C 320 CDI 4-matic, C 350 4-matic, C 350 CDI 4-matic** 07/07 - 150 -225 kW	**i.V.**	**24-166522**	with sports suspension
B4 DMC	**C 180 CDI, C 180 CGI, C 180 Kompressor, C 200, C 200 CDI, C 200 CGI, C 200 Kompressor, C 220 CDI, C 230, C 250 CDI, C 250 CGI, C 280, C 300, C 320 CDI, C 350, C 350 CDI, C 350 CGI** 09/08 - 88 -225 kW	*22-151025*	**24-166218**	with standard chassis
B4 DMC	**C 180 CDI, C 180 CGI, C 180 Kompressor, C 200, C 200 CDI, C 200 CGI, C 200 Kompressor, C 220 CDI, C 230, C 250 CDI, C 250 CGI, C 280, C 300, C 320 CDI, C 350, C 350 CDI, C 350 CGI** 09/08 - 88 -225 kW	**22-151032**	**24-166522**	with sports suspension
B4 DMC	**C 180 CDI, C 180 CGI, C 180 Kompressor, C 200, C 200 CDI, C 200 CGI, C 200 Kompressor, C 220 CDI, C 230, C 250 CDI, C 250 CGI, C 280, C 300, C 320 CDI, C 350, C 350 CDI, C 350 CGI** 09/08 - 88 -225 kW	**22-151049**	**24-166539**	with off-road suspension

MERCEDES-BENZ				
MERCEDES-BENZ C CLASS (W204)				
B6 Sport	**C 230 4-matic, C 250 CDI 4-matic, C 280 4-matic, C 300 4-matic, C 300 CDI 4-matic, C 320 CDI 4-matic, C 350 4-matic, C 350 CDI 4-matic** 07/07 - 150 -225 kW	**35-170815**	**24-170826**	with standard chassis; with sports suspension
B6 Sport	**C 180 CDI, C 180 CGI, C 180 Kompressor, C 200, C 200 CDI, C 200 CGI, C 200 Kompressor, C 220 CDI, C 230, C 250 CDI, C 250 CGI, C 280, C 300, C 320 CDI, C 350, C 350 CDI, C 350 CGI** 09/08 - 88 -225 kW	**35-141822**	**24-141833**	without electronic suspension control
B8	**C 180 CDI, C 180 CGI, C 180 Kompressor, C 200, C 200 CDI, C 200 CGI, C 200 Kompressor, C 220 CDI, C 230, C 250 CDI, C 250 CGI, C 280, C 300, C 320 CDI, C 350, C 350 CDI, C 350 CGI** 09/08 - 88 -225 kW	**35-141846**	**24-141857**	without electronic suspension control
B12 PK	**C 180 CGI, C 180 Kompressor, C 200, C 200 CGI, C 200 Kompressor, C 230, C 250 CGI** 01/07 - 115 -150 kW	**46-180759**		spring pads must be observed; without electronic suspension control; without ride height adjustment; Conditions see certificates VA: lowering (expertise): 30 mm; axle load to: 1150 kg HA: lowering (expertise): 30 mm; axle load to: 1200 kg
B12 PK	**C 180 CDI, C 200 CDI, C 220 CDI, C 250 CDI, C 280, C 300, C 320 CDI, C 350, C 350 CDI, C 350 CGI** 09/08 - 88 -225 kW	**46-180766**		spring pads must be observed; without electronic suspension control; without ride height adjustment; Conditions see certificates VA: lowering (expertise): 30 mm; axle load to: 1150 kg HA: lowering (expertise): 30 mm; axle load to: 1200 kg
B14	**C 180 CDI, C 180 CGI, C 180 Kompressor, C 200, C 200 CDI, C 200 CGI, C 200 Kompressor, C 220 CDI, C 230, C 250 CDI, C 250 CGI, C 280, C 300, C 320 CDI, C 350, C 350 CDI, C 350 CGI** 09/08 - 88 -225 kW	**47-141179**		without electronic suspension control; Conditions see certificates VA: lowering (expertise): 30-50 mm; axle load to: 1110 kg HA: lowering (expertise): 30-50 mm; axle load to: 1225 kg
B16 PSS10	**C 180 CDI, C 180 CGI, C 180 Kompressor, C 200, C 200 CDI, C 200 CGI, C 200 Kompressor, C 220 CDI, C 230, C 250 CDI, C 250 CGI, C 280, C 300, C 320 CDI, C 350, C 350 CDI, C 350 CGI** 09/08 - 88 -225 kW	**48-141147**		without electronic suspension control; Conditions see certificates VA: lowering (expertise): 30-50 mm; axle load to: 1110 kg HA: lowering (expertise): 30-50 mm; axle load to: 1225 kg
MERCEDES-BENZ C CLASS T-Model (S204)				
B1	**C 180 CGI, C 180 Kompressor, C 200 CDI, C 200 Kompressor, C 220 CDI, C 230, C 250 CDI 4-matic, C 250 CGI, C 280, C 320 CDI, C 320 CDI 4-matic, C 350, C 350 CDI, C 350 CDI 4-matic, C 63 AMG** 02/08 - 100 -336 kW	**12-225835**	**12-224623**	VA: with ball bearing; without electronic suspension control; without sport chassis
B1	**C 180 CGI, C 180 Kompressor, C 200 CDI, C 200 Kompressor, C 220 CDI, C 230, C 250 CDI 4-matic, C 250 CGI, C 280, C 320 CDI, C 320 CDI 4-matic, C 350, C 350 CDI, C 350 CDI 4-matic, C 63 AMG** 02/08 - 100 -336 kW	**12-225842**	**12-224623**	VA: with ball bearing; with electronic suspension control; with sports suspension
B3	**C 180 CGI, C 180 Kompressor, C 200 CDI, C 200 Kompressor, C 220 CDI, C 250 CGI** 07/09 - 100 -150 kW	**37-171827**	**36-171859**	with standard chassis
B3	**C 180 CDI, C 200 CDI, C 230, C 280** 08/07 - 88 -170 kW	**37-172299**	**36-171859**	with standard chassis
B3	**C 180 CDI, C 180 CGI, C 180 Kompressor, C 200 CDI, C 200 Kompressor, C 220 CDI, C 250 CGI** 07/09 - 88 -150 kW	**37-171841**	**36-172283**	with standard chassis; Heavy Duty Version .

MERCEDES-BENZ

MERCEDES-BENZ C CLASS T-Model (S204)

B3	**C 180 CDI, C 180 CGI, C 180 Kompressor, C 200 CDI, C 200 Kompressor, C 220 CDI, C 250 CGI** 07/09 - 88 -150 kW	**37-171865**	**36-171873**	with sports suspension
B3	**C 180 CDI, C 180 CGI, C 180 Kompressor, C 200 CDI, C 200 Kompressor, C 220 CDI, C 250 CGI** 07/09 - 88 -150 kW	**37-171889**	**36-171897**	with sports suspension; Heavy Duty Version .
B3	**C 180 CDI, C 180 CGI, C 180 Kompressor, C 200 CDI, C 200 Kompressor, C 220 CDI, C 230, C 250 CGI, C 280, C 320 CDI, C 350, C 350 CDI, C 350 CGI** 10/09 - 88 -225 kW		**36-172382**	with standard chassis; with ride height adjustment
B4 DMC	**C 180 CDI, C 180 CGI, C 180 Kompressor, C 200 CDI, C 200 Kompressor, C 220 CDI, C 230, C 250 CGI, C 280, C 320 CDI, C 350, C 350 CDI, C 350 CGI** 10/09 - 88 -225 kW	*22-151025*	**24-166218**	with standard chassis HA: without ride height adjustment
B4 DMC	**C 180 CDI, C 180 CGI, C 180 Kompressor, C 200 CDI, C 200 Kompressor, C 220 CDI, C 230, C 250 CGI, C 280, C 320 CDI, C 350, C 350 CDI, C 350 CGI** 10/09 - 88 -225 kW	**22-151032**	**24-166522**	with sports suspension HA: without ride height adjustment
B4 DMC	**C 180 CDI, C 180 CGI, C 180 Kompressor, C 200 CDI, C 200 Kompressor, C 220 CDI, C 230, C 250 CGI, C 280, C 320 CDI, C 350, C 350 CDI, C 350 CGI** 10/09 - 88 -225 kW	**22-151049**	**24-166539**	with off-road suspension HA: without ride height adjustment
B4 DMC	**C 250 CDI 4-matic, C 320 CDI 4-matic, C 350 CDI 4-matic** 10/09 - 150 -170 kW	i.V.	**24-166218**	with standard chassis
B4 DMC	**C 250 CDI 4-matic, C 320 CDI 4-matic, C 350 CDI 4-matic** 10/09 - 150 -170 kW	i.V.	**24-166522**	with sports suspension
B6 Sport	**C 180 CDI, C 180 CGI, C 180 Kompressor, C 200 CDI, C 200 Kompressor, C 220 CDI, C 230, C 250 CGI, C 280, C 320 CDI, C 350, C 350 CDI, C 350 CGI** 10/09 - 88 -225 kW	**35-141822**	**24-141833**	without electronic suspension control HA: without ride height adjustment
B6 Sport	**C 250 CDI 4-matic, C 320 CDI 4-matic, C 350 CDI 4-matic** 10/09 - 150 -170 kW	**35-170815**	**24-170826**	with standard chassis; with sports suspension
B8	**C 180 CDI, C 180 CGI, C 180 Kompressor, C 200 CDI, C 200 Kompressor, C 220 CDI, C 230, C 250 CGI, C 280, C 320 CDI, C 350, C 350 CDI, C 350 CGI** 10/09 - 88 -225 kW	**35-141846**	**24-141857**	without electronic suspension control HA: without ride height adjustment
B12 PK	**C 180 CGI, C 180 Kompressor, C 200 Kompressor, C 230, C 250 CGI** 07/09 - 115 -150 kW	**46-180773**		spring pads must be observed; without electronic suspension control; without ride height adjustment; Conditions see certificates VA: lowering (expertise): 30 mm; axle load to: 1150 kg HA: lowering (expertise): 30 mm; axle load to: 1225 kg
B12 PK	**C 180 CDI, C 200 CDI, C 220 CDI, C 280, C 320 CDI, C 350, C 350 CDI, C 350 CGI** 10/09 - 88 -225 kW	**46-180780**		spring pads must be observed; without electronic suspension control; without ride height adjustment; Conditions see certificates VA: lowering (expertise): 30 mm; axle load to: 1150 kg HA: lowering (expertise): 30 mm; axle load to: 1225 kg
B14	**C 180 CDI, C 180 CGI, C 180 Kompressor, C 200 CDI, C 200 Kompressor, C 220 CDI, C 230, C 250 CGI, C 280, C 320 CDI, C 350, C 350 CDI, C 350 CGI** 10/09 - 88 -225 kW	**47-141179**		without electronic suspension control; Conditions see certificates VA: lowering (expertise): 30-50 mm; axle load to: 1110 kg HA: without ride height adjustment; lowering (expertise): 30-50 mm; axle load to: 1225 kg

M

MERCEDES-BENZ

MERCEDES-BENZ C CLASS T-Model (S204)

B16 PSS10	**C 180 CDI, C 180 CGI, C 180 Kompressor, C 200 CDI, C 200 Kompressor, C 220 CDI, C 230, C 250 CGI, C 280, C 320 CDI, C 350, C 350 CDI, C 350 CGI** 10/09 - 88 -225 kW	**48-141147**		without electronic suspension control; Conditions see certificates VA: lowering (expertise): 30-50 mm; axle load to: 1110 kg HA: without ride height adjustment; lowering (expertise): 30-50 mm; axle load to: 1225 kg

MERCEDES-BENZ C-CLASS Coupe (C204)

B6 Sport	**C 180, C 220 CDI, C 250, C 250 CDI, C 350** 06/11 - 115 -225 kW	**35-141822**	**24-141833**	without electronic suspension control
B8	**C 180, C 220 CDI, C 250, C 250 CDI, C 350** 06/11 - 115 -225 kW	**35-141846**	**24-141857**	without electronic suspension control
B14	**C 180, C 220 CDI, C 250, C 250 CDI, C 350** 06/11 - 115 -225 kW	**47-141179**		without electronic suspension control; Conditions see certificates VA: lowering (expertise): 30-50 mm; axle load to: 1110 kg HA: lowering (expertise): 30-50 mm; axle load to: 1225 kg
B16 PSS10	**C 180, C 220 CDI, C 250, C 250 CDI, C 350** 06/11 - 115 -225 kW	**48-141147**		without electronic suspension control; Conditions see certificates VA: lowering (expertise): 30-50 mm; axle load to: 1110 kg HA: lowering (expertise): 30-50 mm; axle load to: 1225 kg

MERCEDES-BENZ CLK (C208)

B3	**200, 200 Kompressor** 06/97 - 06/02 100 -141 kW	**36-129652**	**36-133673**	with standard chassis
B3	**230 Kompressor** 06/97 - 06/02 142 -145 kW	**36-129652**	**36-133673**	with standard chassis
B3	**320** 06/97 - 06/02 160 kW	**36-154104**	**36-133673**	with standard chassis
B4	**200, 200 Kompressor, 230 Kompressor, 320, 430** 06/97 - 06/02 100 -205 kW	**24-100595** **18-140651**	**24-018579**	
B6 Sport	**200, 200 Kompressor, 230 Kompressor, 320, 430, 5.4, 55 AMG** 06/97 - 07/02 100 -260 kW	**24-025980**	**24-100403**	
B8	**200, 200 Kompressor, 230 Kompressor, 320, 430, 5.4, 55 AMG** 06/97 - 07/02 100 -260 kW	**24-025997**	**24-018555**	
B12 PK	**200, 200 Kompressor** 06/97 - 06/02 100 -141 kW	**46-181763**		spring pads must be observed; without ride height adjustment; Conditions see certificates VA: lowering (expertise): 30 mm; axle load to: 990 kg HA: lowering (expertise): 30 mm; axle load to: 1070 kg
B12 PK	**230 Kompressor, 320, 430** 06/97 - 06/02 142 -205 kW	**46-181770**		spring pads must be observed; without ride height adjustment; Conditions see certificates VA: lowering (expertise): 30 mm; axle load to: 1010 kg HA: lowering (expertise): 30 mm; axle load to: 1070 kg
B12 SL	**200, 200 Kompressor, 230 Kompressor, 320, 430** 06/97 - 06/02 100 -205 kW	**46-194695**		spring pads must be observed; without ride height adjustment; Conditions see certificates VA: lowering (expertise): 45-50 mm; axle load to: 1010 kg HA: lowering (expertise): 30-35 mm; axle load to: 1070 kg

MERCEDES-BENZ CLK Convertible (A208)

B3	**200** 03/98 - 03/02 100 kW	**36-129614**	**36-133659**	with standard chassis
B3	**200 Kompressor, 230 Kompressor, 320, 430, 55 AMG** 01/00 - 03/02 120 -255 kW	**36-154104**	**36-133659**	with standard chassis
B4	**200, 200 Kompressor, 230 Kompressor, 320, 430** 03/98 - 03/02 100 -205 kW	**24-100595** **18-140651**	**24-018579**	

MERCEDES-BENZ				
MERCEDES-BENZ CLK Convertible (A208)				
B6 Sport	**200, 200 Kompressor, 230 Kompressor, 320, 430** 03/98 - 03/02 100 -205 kW	**24-025980**	**24-100403**	
B8	**200, 200 Kompressor, 230 Kompressor, 320, 430, 55 AMG** 03/98 - 03/02 100 -255 kW	**24-025997**	**24-018555**	
B12 PK	**200, 200 Kompressor** 03/98 - 03/02 100 -141 kW	**46-181787**		spring pads must be observed; without ride height adjustment; Conditions see certificates VA: lowering (expertise): 30 mm; axle load to: 990 kg HA: lowering (expertise): 30 mm; axle load to: 1070 kg
B12 PK	**230 Kompressor, 320, 430** 03/98 - 03/02 142 -205 kW	**46-181794**		spring pads must be observed; without ride height adjustment; Conditions see certificates VA: lowering (expertise): 30 mm; axle load to: 1010 kg HA: lowering (expertise): 30 mm; axle load to: 1070 kg
B12 SL	**200, 200 Kompressor, 230 Kompressor, 320, 430** 03/98 - 03/02 100 -205 kW	**46-194695**		spring pads must be observed; without ride height adjustment; Conditions see certificates VA: lowering (expertise): 45-50 mm; axle load to: 1010 kg HA: lowering (expertise): 30-35 mm; axle load to: 1070 kg
MERCEDES-BENZ CLK (C209)				
B1	**200 CGI, 200 Kompressor, 220 CDI, 240, 270 CDI, 280, 320, 320 CDI, 350, 500** 06/02 - 110 -225 kW	**12-224159**		VA: with ball bearing
B3	**200 Kompressor** 09/02 - 120 -135 kW	**37-133719**	**36-129676**	with standard chassis
B3	**200 CGI** 07/03 - 125 kW	**37-133733**	**36-129676**	with standard chassis
B3	**200 CGI, 200 Kompressor, 220 CDI, 240, 280, 320, 350** 06/02 - 110 -200 kW	**37-133740**	**36-154166**	with standard chassis; Heavy Duty Version .
B3	**240, 320** 06/02 - 125 -160 kW	**37-133726**	**36-129676**	with standard chassis
B3	**280, 350** 01/05 - 170 -200 kW	**37-133726**	**36-129676**	with standard chassis
B3	**220 CDI** 01/05 - 110 kW	**37-133726**	**36-129676**	with standard chassis
B3	**270 CDI** 10/02 - 125 kW	**37-133740**	**36-129676**	with standard chassis
B3	**270 CDI, 320 CDI, 500** 06/02 - 125 -285 kW		**36-154166**	with standard chassis; Heavy Duty Version .
B3	**320 CDI, 500** 06/02 - 165 -285 kW	**37-133740**	**36-129676**	with standard chassis
B4	**200 CGI, 200 Kompressor, 220 CDI, 240, 270 CDI, 280, 320, 320 CDI, 350** 06/02 - 110 -200 kW	**22-141705**	**24-114714**	with standard chassis
B4	**200 CGI, 200 Kompressor, 220 CDI, 240, 270 CDI, 280, 320, 320 CDI, 350** 06/02 - 110 -200 kW	**22-168085**	**24-114714**	with sports suspension VA: for OE Number 203 320 66 30
B4	**200 CGI, 200 Kompressor, 220 CDI, 240, 270 CDI, 280, 320, 320 CDI, 350** 06/02 - 110 -200 kW	**22-218537**	**24-114714**	with sports suspension VA: for OE Number 203 320 75 30
B6 Sport	**200 CGI, 200 Kompressor, 220 CDI, 240, 270 CDI, 280, 320, 320 CDI, 350, 500, 6.2, 63 AMG** 06/02 - 110 -373 kW	**35-053446**	**24-068802**	with standard chassis

M

MERCEDES-BENZ				
MERCEDES-BENZ CLK (C209)				
B8	**200 CGI, 200 Kompressor, 220 CDI, 240, 270 CDI, 280, 320, 320 CDI, 350, 500, 55 AMG, 6.2, 63 AMG** 09/02 - 110 -373 kW	**35-053453**	**24-068819**	with sports suspension
B12 PK	**200 CGI, 200 Kompressor, 220 CDI** 09/02 - 110 -135 kW	**46-181800**		spring pads must be observed; without electronic suspension control; Conditions see certificates VA: lowering (expertise): 30 mm; axle load to: 1035 kg HA: without ride height adjustment; lowering (expertise): 30 mm; axle load to: 1170 kg
B12 PK	**240, 270 CDI, 280, 320, 320 CDI, 350, 500** 06/02 - 125 -285 kW	**46-181817**		spring pads must be observed; without electronic suspension control; Conditions see certificates VA: lowering (expertise): 30 mm; axle load to: 1130 kg HA: without ride height adjustment; lowering (expertise): 30 mm; axle load to: 1170 kg
B14	**200 CGI, 200 Kompressor, 220 CDI, 240, 270 CDI, 280, 320, 320 CDI, 350, 500, 55 AMG, 6.2, 63 AMG** 09/02 - 110 -373 kW	**47-100770**		Spacers required for several wheel/tyre combinations; with sports suspension; without ride height adjustment; Conditions see certificates VA: lowering (expertise): 30-50 mm; axle load to: 1130 kg HA: lowering (expertise): 30-50 mm; axle load to: 1150 kg
B16 PSS9	**200 CGI, 200 Kompressor, 220 CDI, 240, 270 CDI, 280, 320, 320 CDI, 350, 500, 55 AMG, 6.2, 63 AMG** 09/02 - 110 -373 kW	**48-088602**		Spacers required for several wheel/tyre combinations; with standard chassis; without ride height adjustment; Conditions see certificates VA: lowering (expertise): 30-50 mm; axle load to: 1130 kg HA: lowering (expertise): 30-50 mm; axle load to: 1155 kg
MERCEDES-BENZ CLK Convertible (A209)				
B1	**200 CGI, 200 Kompressor, 240, 280, 320, 320 CDI, 350** 02/03 - 120 -200 kW	**12-224159**		VA: with ball bearing
B3	**200 Kompressor** 02/03 - 120 -135 kW	**37-133719**	**36-129676**	with standard chassis
B3	**200 CGI** 07/03 - 04/04 125 kW	**37-133719**	**36-129676**	with standard chassis
B3	**200 CGI, 200 Kompressor, 240, 280, 320, 350** 02/03 - 120 -200 kW	**37-133740**	**36-154166**	with standard chassis; Heavy Duty Version .
B3	**240** 02/03 - 125 kW	**37-133726**	**36-129676**	with standard chassis
B3	**280** 01/05 - 170 kW	**37-133726**	**36-129676**	with standard chassis
B3	**320** 02/03 - 160 kW	**37-133726**	**36-129676**	with standard chassis
B3	**320 CDI, 350** 01/05 - 165 -200 kW	**37-133726**	**36-129676**	with standard chassis
B3	**320 CDI, 500** 02/03 - 165 -285 kW		**36-154166**	with standard chassis; Heavy Duty Version .
B4	**200 CGI, 200 Kompressor, 240, 280, 320, 320 CDI, 350** 02/03 - 120 -200 kW	**22-141705**	**24-114714**	with standard chassis
B4	**200 CGI, 200 Kompressor, 240, 280, 320, 320 CDI, 350** 02/03 - 120 -200 kW	**22-168085**	**24-114714**	with sports suspension VA: for OE Number 203 320 66 30
B4	**200 CGI, 200 Kompressor, 240, 280, 320, 320 CDI, 350** 02/03 - 120 -200 kW	**22-218537**	**24-114714**	with sports suspension VA: for OE Number 203 320 75 30
B6 Sport	**200 CGI, 200 Kompressor, 240, 280, 320, 320 CDI, 350, 500** 02/03 - 120 -285 kW	**35-053446**	**24-106290**	with standard chassis

MERCEDES-BENZ

MERCEDES-BENZ CLK Convertible (A209)

B8	**200 CGI, 200 Kompressor, 240, 280, 320, 320 CDI, 350, 500, 55 AMG, 63 AMG** 02/03 - 120 -354 kW	**35-053453**	*24-106320*	with sports suspension
B12 PK	**200 CGI, 200 Kompressor** 02/03 - 120 -135 kW	**46-181800**		spring pads must be observed; without electronic suspension control; Conditions see certificates VA: lowering (expertise): 30 mm; axle load to: 1035 kg HA: without ride height adjustment; lowering (expertise): 30 mm; axle load to: 1170 kg
B12 PK	**240, 280, 320, 350, 500** 02/03 - 125 -285 kW	**46-181817**		spring pads must be observed; without electronic suspension control; Conditions see certificates VA: lowering (expertise): 30 mm; axle load to: 1130 kg HA: without ride height adjustment; lowering (expertise): 30 mm; axle load to: 1170 kg
B14	**200 CGI, 200 Kompressor, 240, 280, 320, 320 CDI, 350, 500, 55 AMG, 63 AMG** 02/03 - 120 -354 kW	**47-100770**		Spacers required for several wheel/tyre combinations; with standard chassis; Conditions see certificates VA: lowering (expertise): 30-50 mm; axle load to: 1130 kg HA: lowering (expertise): 30-50 mm; axle load to: 1155 kg
B16 PSS9	**200 CGI, 200 Kompressor, 240, 280, 320, 320 CDI, 350, 500, 55 AMG, 63 AMG** 02/03 - 120 -354 kW	**48-088602**		Spacers required for several wheel/tyre combinations; with standard chassis; Conditions see certificates VA: lowering (expertise): 30-50 mm; axle load to: 1130 kg HA: lowering (expertise): 30-50 mm; axle load to: 1155 kg

MERCEDES-BENZ CLS (C219)

B1	**280, 300, 320 CDI, 350, 350 CDI, 350 CGI, 500, CLS 55 AMG, CLS 63 AMG** 04/06 - 12/10 165 -378 kW	**12-117864**		VA: without ball bearing
B4	**280, 300, 320 CDI, 350, 350 CDI, 350 CGI, 500, CLS 55 AMG, CLS 63 AMG** 04/06 - 12/10 165 -378 kW	**24-121781**	**24-105927**	without Airmatic DC
B4 AMC	**280, 300, 350** 04/06 - 12/10 170 -215 kW	**44-104535** **44-104542**	**40-076614** **40-076621** **20-109097**	with Airmatic DC
B4 AMC	**320 CDI, 350 CDI, 350 CGI, 500** 10/04 - 12/10 165 -285 kW	**44-104535** **44-104542**	**40-116402** **40-116419** **20-109097**	with Airmatic DC
B6 Sport	**280, 300, 320 CDI, 350, 350 CDI, 350 CGI, 500, CLS 55 AMG, CLS 63 AMG** 04/06 - 12/10 165 -378 kW	**24-120234**	**24-069083**	with standard chassis; without Airmatic DC
B8	**280, 300, 320 CDI, 350, 350 CDI, 350 CGI, 500, CLS 55 AMG, CLS 63 AMG** 04/06 - 12/10 165 -378 kW	**24-120241**	**24-120227**	with sports suspension; without Airmatic DC
B12 PK	**320 CDI, 350** 10/04 - 12/10 165 -215 kW	**46-182081**		spring pads must be observed; without Airmatic DC; Conditions see certificates VA: lowering (expertise): 30 mm; axle load to: 1135 kg HA: lowering (expertise): 25-30 mm; axle load to: 1190 kg
B16 PSS9	**280, 300, 320 CDI, 350, 350 CDI, 350 CGI, 500, CLS 55 AMG, CLS 63 AMG** 04/06 - 12/10 165 -378 kW	**48-088763**		without Airmatic DC; Conditions see certificates VA: lowering (expertise): 30-50 mm; axle load to: 1175 kg HA: lowering (expertise): 30-50 mm; axle load to: 1250 kg
B16 RC	**280, 300, 320 CDI, 350, 350 CDI, 350 CGI, 500, CLS 55 AMG, CLS 63 AMG** 04/06 - 12/10 165 -378 kW	**49-132380**		without Airmatic DC; Conditions see certificates VA: lowering (expertise): 30-50 mm; axle load to: 1175 kg HA: lowering (expertise): 30-50 mm; axle load to: 1255 kg

MERCEDES-BENZ CLS (C218)

B4	**350 CDI 4-matic, 500 4-matic** 09/11 - 195 -300 kW		**24-194112**	with standard chassis; without Airmatic DC
B4	**350 CDI 4-matic, 500 4-matic** 09/11 - 195 -300 kW		**24-194129**	with off-road suspension; without Airmatic DC
B6 Sport	**250 CDI, 350, 350 CDI, 500** 02/11 - 150 -300 kW	**35-191339**	**24-197236**	with standard chassis; without Airmatic DC

M

MERCEDES-BENZ				
MERCEDES-BENZ CLS (C218)				
B8	**250 CDI, 350, 350 CDI, 500** 02/11 - 150 -300 kW	**35-197263**	**24-197243**	with sports suspension; without Airmatic DC
B16 PSS10	**250 CDI, 350, 350 CDI, 500** 02/11 - 150 -300 kW	**48-197441**		without Airmatic DC; Conditions see certificates VA: lowering (expertise): 30-50 mm HA: lowering (expertise): 30-50 mm
MERCEDES-BENZ Saloon (W124)				
B1	**200, 200 D, 200 E, 220 E, 230 E, 250 D, 250 Turbo-D, 280 E, 300 D, 300 E, 300 E-24, 300 Turbo-D, 320 E** 01/85 - 06/93 55 -170 kW	**12-116928**		VA: without ball bearing
B3	**200, 200 D, 200 E, 230 E, 230 E CAT** 01/85 - 06/93 53 -100 kW	**36-129355**	**36-129416**	with standard chassis
B3	**200, 200 D, 200 E, 230 E, 230 E CAT** 01/85 - 06/93 53 -100 kW	**36-129362**	**36-129423**	with standard chassis; Heavy Duty Version .
B3	**200, 200 D, 200 E, 220 E, 230 E, 230 E CAT, 250 D, 250 Turbo-D, 260 E, 280 E, 300 D, 300 E, 300 E-24, 300 TD SD, 300 Turbo-D, 320 E** 06/85 - 06/93 53 -170 kW	**36-129386**		Not for Western Europe (Total); with standard chassis
B3	**250 D, 300 D, 300 E** 01/85 - 06/93 66 -138 kW	**36-129362**	**36-129416**	with standard chassis
B3	**250 D, 300 D, 300 E** 01/85 - 06/93 66 -138 kW	**36-129379**	**36-129423**	with standard chassis; Heavy Duty Version .
B4	**200, 200 D, 200 E, 220 E, 230 E, 230 E CAT, 250 D, 250 Turbo-D, 260 E, 280 E, 300 D, 300 E, 300 E-24, 300 TD SD, 300 Turbo-D, 320 E** 06/85 - 06/93 53 -170 kW	**22-001856** **11-101406** SP **18-140651**	**24-015189**	with standard chassis
B4	**200, 200 D, 200 E, 220 E, 230 E, 230 E CAT, 250 D, 250 Turbo-D, 260 E, 280 E, 300 D, 300 E, 300 E-24, 300 TD SD, 300 Turbo-D, 320 E** 06/85 - 06/93 53 -170 kW	**22-040534** **18-140651**	**24-016124**	mark: Sportline
B4	**200, 200 D, 200 E, 220 E, 230 E, 230 E CAT, 250 D, 250 Turbo-D, 260 E, 280 E, 300 D, 300 E, 300 E-24, 300 TD SD, 300 Turbo-D, 320 E** 06/85 - 06/93 53 -170 kW	**22-003614** **11-101406** SP **18-140651**	**24-013857**	mark: Heavy Duty
B4	**200, 200 D, 200 E, 220 E, 230 E, 230 E CAT, 250 D, 250 Turbo-D, 260 E, 280 E, 300 D, 300 E, 300 E-24, 300 TD SD, 300 Turbo-D, 320 E** 06/85 - 06/93 53 -170 kW	**22-001917** **11-101406** SP **18-140651**	**24-013895**	mark: Tropen
B4	**400 E 4.2, 500 E, 500 E AMG 6.0** 01/92 - 06/93 205 -275 kW		**24-015189**	with standard chassis
B4	**400 E 4.2, 500 E, 500 E AMG 6.0** 01/92 - 06/93 205 -275 kW		**24-016124**	mark: Sportline
B4	**400 E 4.2, 500 E, 500 E AMG 6.0** 01/92 - 06/93 205 -275 kW		**24-013857**	mark: Heavy Duty
B4	**400 E 4.2, 500 E, 500 E AMG 6.0** 01/92 - 06/93 205 -275 kW		**24-013895**	mark: Tropen
B6 Sport	**200, 200 D, 200 E, 220 E, 230 E, 230 E CAT, 250 D, 250 Turbo-D, 260 E, 280 E, 300 D, 300 E, 300 E-24, 300 TD SD, 300 Turbo-D, 320 E** 06/85 - 06/93 53 -170 kW	**22-100436**	**24-100441**	without ride height adjustment

M

MERCEDES-BENZ

MERCEDES-BENZ Saloon (W124)

B8	**200, 200 D, 200 E, 230 E, 230 E CAT, 250 D, 250 Turbo-D, 260 E, 280 E, 300 D, 300 E, 300 E-24, 300 TD SD, 300 Turbo-D, 320 E** 06/85 - 06/93 53 -170 kW	**22-003652**	**24-014700**	without ride height adjustment

MERCEDES-BENZ KOMBI Estate (S124)

B1	**200 T, 200 T D, 200 TE, 220 TE, 230 TE, 250 T D, 250 TD Turbo, 280 TE, 300 T D, 300 T Turbo-D, 300 TE, 300 TE-24, 320 TE** 09/85 - 06/93 55 -170 kW	**12-116928**		VA: without ball bearing
B3	**200 E, 200 T, 200 T D, 230 TE, 230 TE CAT** 06/89 - 05/93 53 -100 kW	**36-129355**	**36-129430**	with standard chassis; with ride height adjustment
B3	**250 T D, 250 TD Turbo, 300 T D, 300 TE** 09/85 - 07/93 66 -138 kW	**36-129362**	**36-129430**	with standard chassis; with ride height adjustment
B4	**200 E, 200 T, 200 T D, 200 TE, 220 TE, 230 TE, 230 TE CAT, 250 T D, 250 TD Turbo, 260 TE FGST., 280 TE, 300 T D, 300 T Turbo-D, 300 TD T, 300 TE, 300 TE-24, 320 TE** 10/92 - 06/93 53 -170 kW	**22-001856** **11-101406** SP **18-140651**		with standard chassis
B4	**200 E, 200 T, 200 T D, 200 TE, 220 TE, 230 TE, 230 TE CAT, 250 T D, 250 TD Turbo, 260 TE FGST., 280 TE, 300 T D, 300 T Turbo-D, 300 TD T, 300 TE, 300 TE-24, 320 TE** 10/92 - 06/93 53 -170 kW	**22-040534** **18-140651**		mark: Sportline
B4	**200 E, 200 T, 200 T D, 200 TE, 220 TE, 230 TE, 230 TE CAT, 250 T D, 250 TD Turbo, 260 TE FGST., 280 TE, 300 T D, 300 T Turbo-D, 300 TD T, 300 TE, 300 TE-24, 320 TE** 10/92 - 06/93 53 -170 kW	**22-003614** **11-101406** SP **18-140651**		mark: Heavy Duty
B4	**200 E, 200 T, 200 T D, 200 TE, 220 TE, 230 TE, 230 TE CAT, 250 T D, 250 TD Turbo, 260 TE FGST., 280 TE, 300 T D, 300 T Turbo-D, 300 TD T, 300 TE, 300 TE-24, 320 TE** 10/92 - 06/93 53 -170 kW	**22-001917** **11-101406** SP **18-140651**		mark: Tropen
B6 Sport	**200 E, 200 T, 200 T D, 200 TE, 220 TE, 230 TE, 230 TE CAT, 250 T D, 250 TD Turbo, 260 TE FGST., 280 TE, 300 T D, 300 T Turbo-D, 300 TD T, 300 TE, 300 TE-24, 320 TE** 10/92 - 06/93 53 -170 kW	**22-100436**		
B8	**200 E, 200 T, 200 T D, 200 TE, 220 TE, 230 TE, 230 TE CAT, 250 T D, 250 TD Turbo, 260 TE FGST., 280 TE, 300 T D, 300 T Turbo-D, 300 TD T, 300 TE, 300 TE-24, 320 TE** 10/92 - 06/93 53 -170 kW	**22-003652**		

MERCEDES-BENZ CABRIOLET (A124)

B1	**300 CE-24** 04/92 - 06/93 162 -170 kW	**12-116928**		VA: without ball bearing
B3	**300 CE-24** 04/92 - 06/93 162 -170 kW		**36-129430**	with standard chassis; with ride height adjustment
B4	**300 CE-24** 04/92 - 06/93 162 -170 kW	**22-040534** **18-140651**	**24-016124**	without sport chassis; without off-road suspension

M

MERCEDES-BENZ				
MERCEDES-BENZ CABRIOLET (A124)				
B6 Sport	**300 CE-24** 04/92 - 06/93 162 -170 kW	**22-003652**	**24-014700**	without sport chassis; without off-road suspension
MERCEDES-BENZ PONTON (W120)				
B4	**180, 180 D, 190 Db** 01/57 - 12/62 32 -48 kW	**24-000024**	**24-000123**	
MERCEDES-BENZ PONTON (W121)				
B4	**190 b** 06/59 - 12/61 59 kW	**24-000024**	**24-000123**	
MERCEDES-BENZ HECKFLOSSE (W110)				
B4	**190 C, 190 DC, 200, 200 D, 230** 04/61 - 12/67 40 -88 kW	**24-005272** **18-002461**	**24-005371**	
MERCEDES-BENZ /8 (W114)				
B3	**230.6** 01/68 - 11/76 88 kW	**36-133895**	**36-129737**	with standard chassis
B3	**230.6** 01/68 - 11/76 88 kW	**36-197910**		with standard chassis; mark: 114.017
B3	**230.6, 280, 280 E** 01/68 - 11/76 88 -136 kW	**36-133833**	**36-129782**	with standard chassis; Heavy Duty Version .
B3	**250** 01/68 - 08/72 85 -96 kW	**36-197910**		Only for United States of America; with standard chassis
B3	**280, 280 E** 06/72 - 11/76 118 -136 kW		**36-129737**	with standard chassis
B4	**230.6, 250, 250 2.8, 280, 280 E** 01/68 - 11/76 85 -136 kW	**24-005258** **18-002461**	**24-005357**	with standard chassis
B4	**230.6, 250, 250 2.8, 280, 280 E** 01/71 - 11/76 85 -136 kW	**24-005265** **18-002461**	**24-005364**	mark: Heavy Duty
MERCEDES-BENZ /8 Coupe (W114)				
B3	**250 C, 250 C 2.8, 250 CE** 04/69 - 11/76 96 -110 kW	**36-133895**		with standard chassis
B3	**280 C, 280 CE** 06/72 - 02/77 118 -136 kW			with standard chassis
B4	**250 C, 250 C 2.8, 250 CE, 280 C, 280 CE** 04/69 - 01/77 96 -136 kW	**24-005258** **18-002461**	**24-005357**	with standard chassis
B4	**250 C, 250 C 2.8, 250 CE, 280 C, 280 CE** 01/71 - 01/77 96 -136 kW	**24-005265** **18-002461**	**24-005364**	mark: Heavy Duty
MERCEDES-BENZ /8 (W115)				
B3	**200** 01/68 - 01/77 63 kW	**36-133895**	**36-129737**	with standard chassis
B3	**200, 200 D, 220, 220 D, 230.4, 240 D, 240 D 3.0** 01/68 - 01/77 40 -81 kW	**36-133833**	**36-129782**	with standard chassis; Heavy Duty Version .
B3	**200** 01/68 - 01/77 70 kW	**36-133895**	**36-129737**	with standard chassis

M

MERCEDES-BENZ

MERCEDES-BENZ /8 (W115)

B3	**220** 01/68 - 07/73 66 kW	**36-133895**	**36-129737**	with standard chassis
B3	**220, 220 D** 01/68 - 01/77 44 -77 kW	**36-197910**		Only for United States of America; with standard chassis
B3	**220** 01/68 - 07/73 77 kW	**36-133895**	**36-129737**	with standard chassis
B3	**230.4** 08/73 - 12/76 81 kW	**36-133895**	**36-129737**	with standard chassis
B3	**200 D** 01/68 - 01/77 40 kW	**36-133895**	**36-129737**	with standard chassis
B3	**220 D** 01/68 - 01/77 44 kW	**36-133895**	**36-129737**	with standard chassis
B3	**240 D** 08/73 - 01/77 48 kW	**36-133895**	**36-129737**	with standard chassis
B3	**240 D 3.0** 08/74 - 11/76 59 kW		**36-129737**	with standard chassis
B4	**200, 200 D, 220, 220 D, 230.4, 240 D, 240 D 3.0** 01/68 - 01/77 40 -81 kW	**24-005258** **18-002461**	**24-005357**	with standard chassis
B4	**200, 200 D, 220, 220 D, 230.4, 240 D, 240 D 3.0** 01/71 - 01/77 40 -81 kW	**24-005265** **18-002461**	**24-005364**	mark: Heavy Duty

MERCEDES-BENZ Saloon (W123)

B3	**200, 230, 230 E** 02/76 - 12/85 62 -100 kW	**36-133789**	**36-129737**	with standard chassis
B3	**200, 200 D, 220 D, 230, 230 E, 240 D, 250, 280, 280 E, 300 D, 300 Turbo-D** 01/76 - 07/85 40 -136 kW	**36-154241**	**36-129737**	with standard chassis; mark: TAXI
B3	**200, 200 D, 220 D, 230, 230 E, 240 D** 01/76 - 11/85 40 -100 kW	**36-129713**	**36-129782**	with standard chassis; Heavy Duty Version .
B3	**250, 280, 280 E** 02/76 - 11/85 95 -136 kW	**36-133796**	**36-129737**	with standard chassis
B3	**250, 280, 280 E, 300 D, 300 Turbo-D** 02/76 - 07/85 59 -136 kW	**36-154241**	**36-129782**	with standard chassis; Heavy Duty Version .
B3	**200 D, 220 D, 240 D** 02/76 - 11/85 40 -53 kW	**36-129720**	**36-129737**	with standard chassis
B3	**240 D, 250** 02/76 - 07/85 48 -103 kW		**36-129782**	with standard chassis; with ride height adjustment
B3	**300 D, 300 Turbo-D** 02/76 - 07/85 59 -92 kW	**36-129713**	**36-133819**	with standard chassis
B4	**200, 200 D, 220 D, 230, 230 E, 240 D, 250, 280, 280 E, 300 D, 300 Turbo-D** 01/76 - 07/85 40 -136 kW	**24-007030** **18-002461**	**24-007139**	with standard chassis
B4	**200, 200 D, 220 D, 230, 230 E, 240 D, 250, 280, 280 E, 300 D, 300 Turbo-D** 01/76 - 07/85 40 -136 kW	**24-007047** **18-002461**	**24-007146**	mark: Heavy Duty
B6 Sport	**200, 200 D, 220 D, 230, 230 E, 240 D, 250, 280, 280 E, 300 D, 300 Turbo-D** 01/76 - 07/85 40 -136 kW	**24-005289** **18-002461**	**24-005388**	without ride height adjustment

M

MERCEDES-BENZ

MERCEDES-BENZ KOMBI Estate (S123)

B3	**200 T, 230 T, 230 TE** 04/80 - 11/85 74 -100 kW	**36-133789**	**36-163786**	with standard chassis; with ride height adjustment
B3	**200 T, 230 T, 230 TE, 240 T D, 250 T, 280 TE, 300 T D, 300 T Turbo-D** 10/80 - 12/85 48 -136 kW	**36-154241**	**36-163786**	with standard chassis; mark: TAXI
B3	**200 T, 230 T, 230 TE, 240 T D** 03/79 - 12/85 48 -100 kW	**36-129713**	**36-203000**	with standard chassis; Heavy Duty Version .
B3	**250 T, 280 TE** 09/77 - 11/85 95 -136 kW	**36-133796**	**36-163786**	with standard chassis; with ride height adjustment
B3	**250 T, 280 TE, 300 T D, 300 T Turbo-D** 09/77 - 11/85 59 -136 kW	**36-129713**		with standard chassis; Heavy Duty Version .
B3	**240 T D** 09/77 - 12/85 48 -53 kW	**36-129720**	**36-163786**	with standard chassis; with ride height adjustment
B3	**300 T D, 300 T Turbo-D** 09/77 - 11/85 59 -92 kW	**36-129713**	**36-163786**	with standard chassis; with ride height adjustment
B4	**200 T, 230 T, 230 TE, 240 T D, 250 T, 280 TE, 300 T D, 300 T Turbo-D** 10/80 - 12/85 48 -136 kW	**24-007030** **18-002461**		with standard chassis; without ride height adjustment
B4	**200 T, 230 T, 230 TE, 240 T D, 250 T, 280 TE, 300 T D, 300 T Turbo-D** 10/80 - 12/85 48 -136 kW	**24-007047** **18-002461**		mark: Heavy Duty; without ride height adjustment
B6 Sport	**200 T, 230 T, 230 TE, 240 T D, 250 T, 280 TE, 300 T D, 300 T Turbo-D** 10/80 - 12/85 48 -136 kW	**24-005289** **18-002461**		without ride height adjustment

MERCEDES-BENZ COUPE (C123)

B3	**230 C, 230 CE** 05/77 - 12/85 80 -100 kW	**36-133789**	**36-129737**	with standard chassis
B3	**230 C, 230 CE** 05/77 - 12/85 80 -100 kW	**36-129713**	**36-129782**	with standard chassis; Heavy Duty Version .
B3	**280 C, 280 CE** 03/77 - 11/85 115 -136 kW	**36-133796**	**36-129737**	with standard chassis
B3	**280 C, 280 CE, 300 C Turbo-D** 03/77 - 07/85 92 -136 kW	**36-154241**	**36-129782**	with standard chassis; Heavy Duty Version .
B3	**300 C Turbo-D** 09/81 - 07/85 92 kW	**36-129713**	**36-133819**	with standard chassis
B4	**230 C, 230 CE, 280 C, 280 CE, 300 C Turbo-D** 03/77 - 07/85 80 -136 kW	**24-007030** **18-002461**	**24-007139**	with standard chassis; without ride height adjustment
B4	**230 C, 230 CE, 280 C, 280 CE, 300 C Turbo-D** 03/77 - 07/85 80 -136 kW	**24-007047** **18-002461**	**24-007146**	mark: Heavy Duty; without ride height adjustment
B6 Sport	**230 C, 230 CE, 280 C, 280 CE, 300 C Turbo-D** 03/77 - 07/85 80 -136 kW	**24-005289** **18-002461**	**24-005388**	without ride height adjustment

MERCEDES-BENZ COUPE (C124)

B1	**220 CE, 230 CE, 300 CE, 300 CE-24, 320 CE** 09/89 - 05/93 100 -170 kW	**12-116928**		VA: without ball bearing
B3	**230 CE, 230 CE CAT** 03/87 - 12/92 97 -100 kW	**36-129355**	**36-129416**	with standard chassis

MERCEDES-BENZ

MERCEDES-BENZ COUPE (C124)

B3	**230 CE, 230 CE CAT** 03/87 - 12/92 97 -100 kW	**36-129362**	**36-129423**	with standard chassis; Heavy Duty Version .
B3	**300 CE, 300 CE-24** 03/87 - 05/93 132 -170 kW	**36-129362**	**36-129416**	with standard chassis
B3	**300 CE, 300 CE-24** 03/87 - 05/93 132 -170 kW	**36-129379**	**36-129423**	with standard chassis; Heavy Duty Version .
B4	**220 CE, 230 CE, 230 CE CAT, 300 CE, 300 CE-24, 320 CE** 09/89 - 05/93 97 -170 kW	**22-001900** **11-101406** SP **18-140651**	**24-016681**	with standard chassis
B4	**220 CE, 230 CE, 230 CE CAT, 300 CE, 300 CE-24, 320 CE** 09/89 - 05/93 97 -170 kW	**22-003614** **11-101406** SP **18-140651**	**24-013857**	mark: Heavy Duty
B4	**220 CE, 230 CE, 230 CE CAT, 300 CE, 300 CE-24, 320 CE** 09/89 - 05/93 97 -170 kW	**22-040534** **18-140651**	**24-016124**	mark: Sportline
B6 Sport	**220 CE, 230 CE, 230 CE CAT, 300 CE, 300 CE-24, 320 CE** 09/89 - 05/93 97 -170 kW	**22-100436**	**24-100441**	with standard chassis
B8	**220 CE, 230 CE, 230 CE CAT, 300 CE, 300 CE-24, 320 CE** 09/89 - 05/93 97 -170 kW	**22-003652**	**24-014700**	with sports suspension

MERCEDES-BENZ E-CLASS (W124)

B1	**E 200, E 200 D, E 220, E 250 D, E 250 Turbo-D, E 280, E 280 long, E 300 D, E 300 Turbo-D, E 320** 06/93 - 06/95 55 -162 kW	**12-116928**		VA: without ball bearing
B3	**E 200, E 200 D, E 220** 06/93 - 06/95 55 -110 kW	**36-129362**	**36-129416**	with standard chassis
B3	**E 200, E 200 D, E 220** 06/93 - 06/95 55 -110 kW	**36-129379**	**36-129423**	with standard chassis; Heavy Duty Version .
B3	**E 200, E 200 D, E 220, E 250 D, E 250 Turbo-D, E 280, E 280 long, E 300 D, E 300 Turbo-D, E 320** 06/93 - 06/95 55 -162 kW	**36-129386**		Not for Western Europe (Total); with standard chassis
B3	**E 250 D, E 250 Turbo-D, E 280, E 300 D, E 300 Turbo-D, E 320** 06/93 - 06/95 83 -162 kW	**36-129379**	**36-129416**	with standard chassis
B3	**E 250 D, E 250 Turbo-D, E 280, E 300 D, E 300 Turbo-D, E 320** 06/93 - 06/95 83 -162 kW		**36-129423**	with standard chassis; Heavy Duty Version .
B4	**E 200, E 200 D, E 220, E 250 D, E 250 Turbo-D, E 280, E 280 long, E 300 D, E 300 Turbo-D, E 320** 06/93 - 06/95 55 -162 kW	**22-001856** **11-101406** SP **18-140651**	**24-015189**	with standard chassis
B4	**E 200, E 200 D, E 220, E 250 D, E 250 Turbo-D, E 280, E 280 long, E 300 D, E 300 Turbo-D, E 320** 06/93 - 06/95 55 -162 kW	**22-003614** **11-101406** SP **18-140651**	**24-013857**	mark: Heavy Duty
B4	**E 200, E 200 D, E 220, E 250 D, E 280, E 280 long, E 300 D, E 300 Turbo-D, E 320** 06/93 - 06/95 55 -162 kW	**22-040534** **18-140651**	**24-016124**	mark: Sportline

M

MERCEDES-BENZ				
MERCEDES-BENZ E-CLASS (W124)				
B4	**E 200, E 200 D, E 220, E 250 D, E 250 Turbo-D, E 280, E 280 long, E 300 D, E 300 Turbo-D, E 320** 06/93 - 06/95 55 -162 kW	**22-001917** **11-101406** SP **18-140651**	**24-013895**	mark: Tropen
B4	**E 420, E 500, E 60 AMG** 06/93 - 06/95 205 -280 kW		**24-015189**	with standard chassis
B4	**E 420, E 500, E 60 AMG** 06/93 - 06/95 205 -280 kW		**24-016124**	mark: Sportline
B4	**E 420, E 500, E 60 AMG** 06/93 - 06/95 205 -280 kW		**24-013857**	mark: Heavy Duty
B4	**E 420, E 500, E 60 AMG** 06/93 - 06/95 205 -280 kW		**24-013895**	mark: Tropen
B6 Sport	**E 200, E 200 D, E 220, E 250 D, E 250 Turbo-D, E 280, E 280 long, E 300 D, E 300 Turbo-D, E 320** 06/93 - 06/95 55 -162 kW	**22-100436**	**24-100441**	with standard chassis
B8	**E 200, E 200 D, E 220, E 250 D, E 250 Turbo-D, E 280, E 280 long, E 300 D, E 300 Turbo-D, E 320** 06/93 - 06/95 55 -162 kW	**22-003652**	**24-014700**	with sports suspension
MERCEDES-BENZ E-CLASS Estate (S124)				
B1	**E 280 T, E 320 T** 06/93 - 06/96 142 -162 kW	**12-116928**		VA: without ball bearing
B3	**E 200 T, E 220 T** 06/93 - 06/96 100 -110 kW	**36-129362**	**36-129430**	with standard chassis; with ride height adjustment
B3	**300 TD T, E 250 T D, E 250 Turbo D, E 280 T, E 300 T D, E 300 T Turbo-D, E 320 T** 06/92 - 06/96 83 -162 kW	**36-129379**	**36-129430**	with standard chassis; with ride height adjustment
B4	**300 TD T, E 200 T, E 220 T, E 250 T D, E 250 Turbo D, E 280 T, E 300 T D, E 300 T Turbo-D, E 320 T** 06/92 - 06/96 83 -162 kW	**22-001856** **11-101406** SP **18-140651**		with standard chassis
B4	**300 TD T, E 200 T, E 220 T, E 250 T D, E 250 Turbo D, E 280 T, E 300 T D, E 300 T Turbo-D, E 320 T** 06/92 - 06/96 83 -162 kW	**22-003614** **11-101406** SP **18-140651**		mark: Heavy Duty
B4	**300 TD T, E 200 T, E 220 T, E 250 T D, E 250 Turbo D, E 280 T, E 300 T D, E 300 T Turbo-D, E 300 TE-24 AMG, E 320 T, E 36 T AMG** 06/92 - 06/96 83 -200 kW	**22-040534** **18-140651**		mark: Sportline
B4	**300 TD T, E 200 T, E 220 T, E 250 T D, E 250 Turbo D, E 280 T, E 300 T D, E 300 T Turbo-D, E 320 T** 06/92 - 06/96 83 -162 kW	**22-001917** **11-101406** SP **18-140651**		mark: Tropen
B6 Sport	**300 TD T, E 200 T, E 220 T, E 250 T D, E 250 Turbo D, E 280 T, E 300 T D, E 300 T Turbo-D, E 320 T** 06/92 - 06/96 83 -162 kW	**22-100436**		with standard chassis
B8	**300 TD T, E 200 T, E 220 T, E 250 T D, E 250 Turbo D, E 280 T, E 300 T D, E 300 T Turbo-D, E 300 TE-24 AMG, E 320 T, E 36 T AMG** 06/92 - 06/96 83 -200 kW	**22-003652**		with sports suspension

M

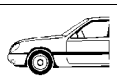

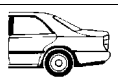

MERCEDES-BENZ

MERCEDES-BENZ E-CLASS Coupe (C124)

B1	**E 200, E 220, E 320** 06/93 - 06/97 100 -162 kW	**12-116928**		VA: without ball bearing
B3	**E 200, E 220** 06/93 - 06/97 100 -110 kW	**36-129362**	**36-129416**	with standard chassis
B3	**E 200, E 220** 06/93 - 06/97 100 -110 kW	**36-129379**	**36-129423**	with standard chassis; Heavy Duty Version .
B3	**E 320** 06/93 - 06/97 162 kW	**36-129379**	**36-129416**	with standard chassis
B3	**E 320** 06/93 - 06/97 162 kW		**36-129423**	with standard chassis; Heavy Duty Version .
B4	**E 200, E 220, E 320** 06/93 - 06/97 100 -162 kW	**22-001900** **11-101406** SP **18-140651**	**24-016681**	with standard chassis
B4	**E 200, E 220, E 320** 06/93 - 06/97 100 -162 kW	**22-003614** **11-101406** SP **18-140651**	**24-013857**	mark: Heavy Duty
B4	**E 200, E 220, E 320, E 36 AMG** 06/93 - 06/97 100 -200 kW	**22-040534** **18-140651**	**24-016124**	mark: Sportline
B6 Sport	**E 200, E 220, E 320** 06/93 - 06/97 100 -162 kW	**22-100436**	**24-100441**	with standard chassis
B8	**E 200, E 220, E 320, E 36 AMG** 06/93 - 06/97 100 -200 kW	**22-003652**	**24-014700**	with sports suspension

MERCEDES-BENZ E-CLASS Convertible (A124)

B4	**E 200, E 220, E 320** 06/93 - 12/95 100 -162 kW	**22-040534** **11-101406** SP **18-140651**	**24-016124**	
B6 Sport	**E 200, E 220, E 320** 06/93 - 12/95 100 -162 kW	**22-100436**	**24-100441**	with standard chassis
B8	**E 200, E 220, E 320** 06/93 - 12/95 100 -162 kW	**22-003652**	**24-014700**	with sports suspension

MERCEDES-BENZ E-CLASS (W210)

B3	**E 200, E 200 D, E 200 Kompressor, E 220 D, E 230, E 240, E 280, E 320** 06/95 - 03/02 55 -165 kW	**36-129584**	**36-129676**	with sports suspension; mark: Avantgarde; without ride height adjustment
B3	**E 200, E 200 Kompressor** 06/95 - 03/02 100 -137 kW	**36-129591**		with sports suspension; Heavy Duty Version .; mark: Avantgarde
B3	**E 200** 06/95 - 06/99 100 kW	**36-129485**	**36-129690**	-> CH.Nr.: A394035; with standard chassis; mark: Classic; mark: Elegance; without ride height adjustment
B3	**E 200** CH-Nr. - 06/99 100 kW	**36-129607**	**36-129690**	CH.Nr.: A394036-> A962231; with standard chassis; mark: Classic; mark: Elegance; without ride height adjustment
B3	**E 200** 06/95 - 06/99 100 kW	**36-129614**	**36-129669**	-> CH.Nr.: A962231; with standard chassis; Heavy Duty Version .; mark: Classic; mark: Elegance; without ride height adjustment
B3	**E 200, E 240, E 280** 07/99 - 03/02 100 -150 kW	**36-129614**	**36-129690**	CH.Nr.: A962232 ->; with standard chassis; mark: Classic; mark: Elegance; without ride height adjustment
B3	**E 200, E 240, E 280** 07/99 - 03/02 100 -150 kW	**36-129621**	**36-129669**	CH.Nr.: A962232 ->; with standard chassis; Heavy Duty Version .; mark: Classic; mark: Elegance; without ride height adjustment

M

MERCEDES-BENZ

MERCEDES-BENZ E-CLASS (W210)

B3	**E 200, E 200 CDI, E 200 D, E 200 Kompressor, E 220 CDI, E 220 D, E 230, E 240, E 250 D, E 250 Turbo-D, E 280, E 290 Turbo-D, E 300 D, E 300 Turbo-D, E 320, E 320 CDI** 06/95 - 03/02 65 -162 kW		**36-133673**	with standard chassis; mark: Classic; mark: Elegance; with ride height adjustment
B3	**E 230, E 240** 06/95 - 06/99 110 -125 kW	**36-129485**	**36-129690**	-> CH.Nr.: A394035; with standard chassis; mark: Classic; mark: Elegance; without ride height adjustment; manual transmission
B3	**E 230, E 240** CH-Nr. - 06/99 110 -125 kW	**36-129607**	**36-129690**	CH.Nr.: A394036-> A962231; with standard chassis; mark: Classic; mark: Elegance; without ride height adjustment; manual transmission
B3	**E 230, E 240** 06/95 - 06/99 110 -125 kW	**36-129614**	**36-129690**	-> CH.Nr.: A962231; with standard chassis; mark: Classic; mark: Elegance; without ride height adjustment; automatic transmission
B3	**E 230, E 240, E 300 D** 06/95 - 06/99 100 -125 kW	**36-134526**	**36-129669**	-> CH.Nr.: A394035; with standard chassis; Heavy Duty Version .; mark: Classic; mark: Elegance; without ride height adjustment
B3	**E 230, E 240** CH-Nr. - 06/99 110 -125 kW	**36-129621**	**36-129669**	CH.Nr.: A394036-> A962231; with standard chassis; Heavy Duty Version .; mark: Classic; mark: Elegance; without ride height adjustment
B3	**E 320** 06/95 - 06/97 162 kW	**36-129614**	**36-129690**	with standard chassis; mark: Classic; mark: Elegance; without ride height adjustment
B3	**E 320** 06/95 - 06/97 162 kW	**36-134526**	**36-129669**	with standard chassis; Heavy Duty Version .; mark: Classic; mark: Elegance; without ride height adjustment
B3	**E 320, E 430** CH-Nr. - 03/02 165 -205 kW	**36-129614**	**36-129669**	CH.Nr.: A394036 ->; with standard chassis; mark: Classic; mark: Elegance
B3	**E 320, E 430** CH-Nr. - 03/02 165 -205 kW	**36-129621**	**36-129683**	CH.Nr.: A394036 ->; with standard chassis; Heavy Duty Version .; mark: Classic; mark: Elegance
B3	**E 420, E 430, E 430 4-matic** 01/96 - 03/02 205 kW	**36-129591**	**36-154166**	with standard chassis; mark: Avantgarde
B3	**E 420, E 430** 01/96 - 06/99 205 kW	**36-134526**	**36-129669**	-> CH.Nr.: A394035; with standard chassis; mark: Classic; mark: Elegance
B3	**E 420, E 430** 01/96 - 06/99 205 kW		**36-129683**	-> CH.Nr.: A394035; with standard chassis; Heavy Duty Version .; mark: Classic; mark: Elegance
B3	**E 430 4-matic** 05/99 - 03/02 205 kW	**36-129621**	**36-129669**	with standard chassis; mark: Classic; mark: Elegance
B3	**E 200 D, E 220 D, E 230, E 240, E 280, E 320** 06/95 - 03/02 55 -165 kW	**36-129591**	**36-154166**	with sports suspension; Heavy Duty Version .; mark: Avantgarde; without ride height adjustment
B3	**E 200 D, E 200 Kompressor, E 220 D, E 250 D, E 250 Turbo-D, E 280, E 290 Turbo-D** 06/95 - 06/99 55 -150 kW	**36-129614**	**36-129690**	-> CH.Nr.: A962231; with standard chassis; mark: Classic; mark: Elegance; without ride height adjustment
B3	**E 200 D, E 200 Kompressor, E 220 D, E 250 D, E 250 Turbo-D, E 280, E 290 Turbo-D** 06/95 - 06/99 55 -142 kW	**36-134526**	**36-129669**	-> CH.Nr.: A394035; with standard chassis; Heavy Duty Version .; mark: Classic; mark: Elegance; without ride height adjustment
B3	**E 200 D, E 200 Kompressor, E 220 D, E 250 D, E 250 Turbo-D, E 280, E 290 Turbo-D** CH-Nr. - 06/99 55 -150 kW	**36-129621**	**36-129669**	CH.Nr.: A394036-> A962231; with standard chassis; Heavy Duty Version .; mark: Classic; mark: Elegance; without ride height adjustment
B3	**E 200 CDI, E 220 CDI, E 220 D, E 250 D, E 250 Turbo-D, E 290 Turbo-D, E 300 D** 06/95 - 03/02 70 -110 kW	**36-129584**	**36-129676**	with sports suspension; mark: Avantgarde; without ride height adjustment; manual transmission
B3	**E 200 CDI, E 220 CDI, E 220 D, E 250 D, E 250 Turbo-D, E 290 Turbo-D, E 300 D** 06/95 - 03/02 70 -110 kW	**36-129591**	**36-154166**	with standard chassis; Heavy Duty Version .; mark: Avantgarde; without ride height adjustment

MERCEDES-BENZ

MERCEDES-BENZ E-CLASS (W210)

B3	**E 200 CDI, E 220 CDI, E 300 D, E 300 Turbo-D** 12/96 - 06/99 75 -130 kW	**36-134526**	**36-129690**	-> CH.Nr.: A394035; with standard chassis; mark: Classic; mark: Elegance; without ride height adjustment
B3	**E 200 CDI, E 220 CDI, E 270 CDI, E 300 D, E 300 Turbo-D, E 320 CDI** 12/96 - 03/02 75 -145 kW		**36-129669**	with standard chassis; Heavy Duty Version .; mark: Classic; mark: Elegance; without ride height adjustment
B3	**E 200 CDI, E 200 D, E 200 Kompressor, E 220 CDI** CH-Nr. - 03/02 65 -137 kW	**36-129614**	**36-129690**	CH.Nr.: A394036 ->; with standard chassis; mark: Classic; mark: Elegance; without ride height adjustment; manual transmission
B3	**E 200 CDI, E 200 D, E 200 Kompressor, E 220 CDI** CH-Nr. - 03/02 65 -137 kW	**36-129621**	**36-129690**	CH.Nr.: A394036 ->; with standard chassis; mark: Classic; mark: Elegance; without ride height adjustment; automatic transmission
B3	**E 200 CDI, E 200 D, E 200 Kompressor, E 220 CDI** CH-Nr. - 03/02 65 -137 kW	**36-129621**	**36-129669**	CH.Nr.: A394036 ->; with standard chassis; Heavy Duty Version .; mark: Classic; mark: Elegance; without ride height adjustment
B3	**E 220 CDI, E 270 CDI, E 320 CDI** 07/99 - 03/02 92 -145 kW	**36-129621**	**36-129690**	CH.Nr.: A394036 ->; with standard chassis; mark: Classic; mark: Elegance; without ride height adjustment
B3	**E 270 CDI, E 300 Turbo-D, E 320 CDI** 12/96 - 03/02 125 -145 kW	**36-129591**	**36-129676**	with sports suspension; Heavy Duty Version .; mark: Avantgarde; without ride height adjustment
B3	**E 270 CDI, E 300 Turbo-D, E 320 CDI** 12/96 - 03/02 125 -145 kW		**36-154166**	with sports suspension; Heavy Duty Version .; mark: Avantgarde; with ride height adjustment
B4	**E 200, E 200 D, E 200 Kompressor, E 220 D, E 240, E 280, E 320, E 430** 06/95 - 06/99 55 -205 kW	**24-108256**	**24-108263**	-> CH.Nr.: A394035; with standard chassis; without ADS; without ride height adjustment
B4	**E 200, E 200 D, E 200 Kompressor, E 220 D, E 240, E 280, E 320, E 430** 06/95 - 06/99 55 -205 kW	**24-021548**	**24-021555**	-> CH.Nr.: A394035; without ADS; mark: Heavy Duty; without ride height adjustment
B4	**E 200, E 200 D, E 200 Kompressor, E 220 D, E 240, E 280, E 320, E 430** 06/95 - 06/99 55 -205 kW	**24-100540**	**24-100557**	-> CH.Nr.: A394035; with sports suspension; without ADS; mark: Avantgarde; without ride height adjustment
B4	**E 200, E 200 D, E 200 Kompressor, E 220 D, E 240, E 280, E 320, E 430** 07/99 - 03/02 55 -205 kW	**24-100540**	**24-100564**	CH.Nr.: A394036 ->; with standard chassis; without ADS; without ride height adjustment
B4	**E 200, E 200 D, E 200 Kompressor, E 220 D, E 240, E 280, E 320, E 430** 07/99 - 03/02 55 -205 kW	**24-100571**	**24-100588**	CH.Nr.: A394036 ->; with sports suspension; without ADS; mark: Avantgarde; without ride height adjustment
B4	**E 280 4-matic, E 320 4-matic, E 430 4-matic** 12/96 - 03/02 150 -205 kW	**24-060905**	**24-108263**	with standard chassis; without ride height adjustment
B4	**E 200 CDI, E 220 CDI, E 220 D, E 230, E 250 D, E 250 Turbo-D, E 280, E 290 Turbo-D, E 300 D, E 300 Turbo-D, E 320, E 420** 01/96 - 03/02 70 -205 kW	**24-108256**	**24-108263**	with standard chassis; without ride height adjustment
B4	**E 200 CDI, E 220 CDI, E 230, E 250 D, E 250 Turbo-D, E 280, E 290 Turbo-D, E 300 D, E 300 Turbo-D, E 320, E 420** 01/96 - 03/02 75 -205 kW	**24-021548**	**24-021555**	mark: Heavy Duty
B4	**E 200 CDI, E 220 CDI, E 220 D, E 230, E 250 D, E 250 Turbo-D, E 280, E 290 Turbo-D, E 300 D, E 300 Turbo-D, E 320, E 420** 01/96 - 03/02 70 -205 kW	**24-100540**	**24-100557**	with sports suspension; mark: Avantgarde; without ride height adjustment
B4	**E 200 CDI, E 200 Kompressor, E 220 CDI, E 240, E 270 CDI, E 320 CDI** 07/99 - 03/02 85 -145 kW	**24-100540**	**24-100564**	with standard chassis; without ride height adjustment

M

MERCEDES-BENZ				
MERCEDES-BENZ E-CLASS (W210)				
B4	**E 200 CDI, E 200 Kompressor, E 220 CDI, E 240, E 270 CDI, E 320 CDI** 07/99 - 03/02 85 -145 kW	**24-100571**	**24-100588**	with sports suspension; mark: Avantgarde; without ride height adjustment
B4	**E 220 D** 06/95 - 06/99 70 kW	**24-021548**	**24-021555**	-> CH.Nr.: A394035; mark: Heavy Duty; without ride height adjustment
B6 Sport	**E 200, E 200 CDI, E 200 D, E 200 Kompressor, E 220 CDI, E 220 D, E 240, E 250 D, E 250 Turbo-D, E 280, E 290 Turbo-D, E 300 Turbo-D, E 320, E 430** 06/95 - 06/99 55 -205 kW	**24-100458**	**24-100465**	-> CH.Nr.: A394035; without ADS; without ride height adjustment
B6 Sport	**E 200, E 200 CDI, E 200 D, E 200 Kompressor, E 220 CDI, E 220 D, E 240, E 270 CDI, E 280, E 320, E 320 CDI, E 430** 07/99 - 03/02 55 -205 kW	**24-021562**	**24-062039**	CH.Nr.: A394036 ->; without ADS; without ride height adjustment
B6 Sport	**E 230, E 280, E 300 D, E 320, E 420** 06/95 - 06/97 100 -205 kW	**24-100458**	**24-100465**	without ride height adjustment
B8	**E 200, E 200 CDI, E 200 D, E 200 Kompressor, E 220 CDI, E 220 D, E 240, E 250 D, E 250 Turbo-D, E 280, E 290 Turbo-D, E 300 Turbo-D, E 320, E 430, E 50 AMG** 06/95 - 06/99 55 -255 kW	**24-021562**	**24-021579**	-> CH.Nr.: A394035; without ADS; without ride height adjustment
B8	**E 200, E 200 CDI, E 200 D, E 200 Kompressor, E 220 CDI, E 220 D, E 240, E 270 CDI, E 280, E 320, E 320 CDI, E 430, E 55 AMG** 07/99 - 03/02 55 -260 kW	**24-062046**	**24-062053**	CH.Nr.: A394036 ->; without ADS; without ride height adjustment
B8	**E 230, E 280, E 300 D, E 320, E 420** 06/95 - 06/97 100 -205 kW		**24-021579**	without ride height adjustment
B12 PK	**E 200, E 200 CDI, E 200 D, E 200 Kompressor, E 220 CDI, E 220 D, E 230, E 250 D, E 250 Turbo-D, E 290 Turbo-D** 06/95 - 06/99 55 -137 kW	**46-190413**		-> CH.Nr.: A394035; spring pads must be observed; without ADS; without ride height adjustment; Conditions see certificates VA: lowering (expertise): 35 mm; axle load to: 1095 kg HA: lowering (expertise): 30 mm; axle load to: 1165 kg
B12 PK	**E 200, E 200 CDI, E 200 D, E 200 Kompressor, E 220 D, E 270 CDI** 07/99 - 03/02 55 -137 kW	**46-190420**		CH.Nr.: A394036 ->; spring pads must be observed; without ADS; without ride height adjustment; Conditions see certificates VA: lowering (expertise): 35 mm; axle load to: 1095 kg HA: lowering (expertise): 30 mm; axle load to: 1165 kg
B12 PK	**E 240, E 280, E 320, E 430** 06/95 - 06/99 125 -205 kW	**46-190437**		-> CH.Nr.: A394035; spring pads must be observed; without ADS; without ride height adjustment; Conditions see certificates VA: lowering (expertise): 35 mm; axle load to: 1095 kg HA: lowering (expertise): 30 mm; axle load to: 1165 kg
B12 PK	**E 240, E 280, E 320, E 430** 07/99 - 03/02 125 -205 kW	**46-190444**		CH.Nr.: A394036 ->; spring pads must be observed; without ADS; without ride height adjustment; Conditions see certificates VA: lowering (expertise): 35 mm; axle load to: 1095 kg HA: lowering (expertise): 30 mm; axle load to: 1165 kg
B12 PK	**E 220 CDI** 07/99 - 03/02 105 kW	**46-190420**		CH.Nr.: A394035 ->; spring pads must be observed; without ADS; without ride height adjustment; Conditions see certificates VA: lowering (expertise): 35 mm; axle load to: 1095 kg HA: lowering (expertise): 30 mm; axle load to: 1165 kg
MERCEDES-BENZ E-CLASS Estate (S210)				
B3	**E 200 T, E 200 T Kompressor, E 220 T CDI, E 230 T, E 240 T, E 250 T D, E 250 T Turbo-D, E 270 T CDI, E 280 T, E 290 T Turbo-D, E 300 T Turbo-D, E 320 T, E 320 T CDI, E 420 T, E 430 T** 06/96 - 03/03 83 -205 kW	**36-129584**	**36-171989**	with sports suspension; mark: Avantgarde

MERCEDES-BENZ

MERCEDES-BENZ E-CLASS Estate (S210)

B3	**E 200 T, E 200 T Kompressor, E 220 T CDI, E 230 T, E 240 T, E 250 T D, E 250 T Turbo-D, E 270 T CDI, E 280 T, E 290 T Turbo-D, E 300 T Turbo-D, E 320 T, E 320 T CDI, E 420 T, E 430 T** 06/96 - 03/03 83 -205 kW	**36-129591**	**36-129676**	with sports suspension; Heavy Duty Version .; mark: Avantgarde
B3	**E 200 T, E 230 T** 06/96 - CH-Nr. 100 -110 kW	**36-129485**	**36-198375**	-> CH.Nr.: A 394035; with standard chassis; mark: Classic; mark: Elegance
B3	**E 200 T, E 230 T** 06/96 - CH-Nr. 100 -110 kW	**36-129614**		-> CH.Nr.: A 394035; with standard chassis; Heavy Duty Version .; mark: Classic; mark: Elegance
B3	**E 200 T, E 200 T Kompressor, E 220 T CDI, E 240 T, E 250 T D, E 320 T** 06/99 - 03/03 83 -165 kW	**36-129614**	**36-198375**	CH.Nr.: A 962232 ->; with standard chassis; mark: Classic; mark: Elegance
B3	**E 200 T, E 200 T Kompressor, E 220 T CDI, E 240 T, E 250 T D, E 320 T** 06/99 - 03/03 83 -165 kW	**36-129621**		CH.Nr.: A 962232 ->; with standard chassis; Heavy Duty Version .; mark: Classic; mark: Elegance
B3	**E 200 T Kompressor, E 320 T** 12/96 - 05/99 137 -165 kW	**36-129614**	**36-198375**	-> CH.Nr.: A 962231; with standard chassis; mark: Classic; mark: Elegance
B3	**E 200 T Kompressor, E 320 T** 12/96 - 05/99 137 -165 kW	**36-129621**		-> CH.Nr.: A 962231; with standard chassis; Heavy Duty Version .; mark: Classic; mark: Elegance
B3	**E 250 T D, E 290 T Turbo-D, E 420 T** 06/96 - CH-Nr. 83 -205 kW	**36-134526**	**36-198375**	-> CH.Nr.: A 394035; with standard chassis; mark: Classic; mark: Elegance
B3	**E 250 T Turbo-D, E 270 T CDI, E 280 T, E 300 T Turbo-D, E 320 T CDI, E 430 T** 12/96 - 03/03 110 -205 kW	**36-129621**	**36-198375**	with standard chassis; mark: Classic; mark: Elegance
B3	**E 290 T Turbo-D** CH-Nr. - 06/99 95 kW	**36-129614**	**36-198375**	CH.Nr.: A 394036 ->; with standard chassis; mark: Classic; mark: Elegance
B4	**E 200 T, E 200 T Kompressor, E 220 T CDI, E 230 T, E 240 T, E 250 T D, E 250 T Turbo-D, E 280 T, E 290 T Turbo-D, E 300 T Turbo-D, E 320 T, E 420 T, E 430 T** 06/96 - 07/99 83 -205 kW	**24-108256** IO		-> CH.Nr.: A394035; with standard chassis; without ADS
B4	**E 200 T, E 200 T Kompressor, E 220 T CDI, E 230 T, E 240 T, E 250 T D, E 250 T Turbo-D, E 280 T, E 290 T Turbo-D, E 300 T Turbo-D, E 320 T, E 420 T, E 430 T** 06/96 - 07/99 83 -205 kW	**24-100540** IO		-> CH.Nr.: A394035; with sports suspension; without ADS; mark: Avantgarde
B4	**E 200 T, E 200 T Kompressor, E 240 T, E 280 T, E 320 T, E 430 T** 07/99 - 03/03 100 -205 kW	**24-100540** IO		with standard chassis; without ADS
B4	**E 200 T, E 200 T Kompressor, E 240 T, E 280 T, E 320 T, E 430 T** 07/99 - 03/03 100 -205 kW	**24-100571** IO		with sports suspension; without ADS; mark: Avantgarde
B4	**E 200 T Kompressor, E 220 T CDI, E 240 T, E 270 T CDI, E 320 T CDI** 07/99 - 03/03 105 -145 kW	**24-100540** IO		with standard chassis
B4	**E 200 T Kompressor, E 220 T CDI, E 240 T, E 270 T CDI, E 320 T CDI** 07/99 - 03/03 105 -145 kW	**24-100571** IO		with sports suspension; mark: Avantgarde
B4	**E 280 T 4-matic, E 320 T 4-matic, E 430 T 4-matic** 12/96 - 03/03 150 -205 kW	**24-060905** HF		with standard chassis; without ADS

M

MERCEDES-BENZ				
MERCEDES-BENZ E-CLASS (W211)				
B1	**E 200 CDI, E 200 CGI, E 200 Kompressor, E 220 CDI, E 230, E 240, E 270 CDI, E 280, E 320, E 320 CDI, E 350, E 350 CGI, E 400 CDI, E 500, E200 NGT** 03/02 - 12/08 75 -225 kW	**12-117864**		VA: without ball bearing
B3	**E200 NGT** 03/04 - 12/08 120 kW	**37-154127**	**36-154142**	with standard chassis
B3	**E 280, E 280 CDI, E 320 CDI** 11/02 - 12/08 130 -170 kW	**37-154127**	**36-154142**	with standard chassis
B3	**E 280, E 280 CDI, E 320 CDI, E200 NGT** 03/04 - 12/08 120 -170 kW		**36-163779**	with standard chassis; Heavy Duty Version .
B3	**E 280, E 280 CDI, E 320 CDI, E200 NGT** 03/04 - 12/08 120 -170 kW	**37-163761**	**36-163731**	with sports suspension; mark: Avantgarde
B3	**E 280, E 280 CDI, E 320 CDI, E200 NGT** 03/04 - 12/08 120 -170 kW		**36-163779**	with sports suspension; Heavy Duty Version .; mark: Avantgarde
B3	**E 320** 03/02 - 12/08 165 kW	**37-154110**	**36-154135**	with standard chassis
B3	**E 320** 03/02 - 12/08 165 kW	**37-163747**	**36-154159**	with sports suspension; mark: Avantgarde
B3	**E 200 CDI, E 200 Kompressor, E 220 CDI, E 230, E 240** 03/02 - 12/08 75 -150 kW	**37-153991**	**36-154135**	with standard chassis
B3	**E 200 CDI, E 200 Kompressor, E 220 CDI, E 230, E 240, E 320** 03/02 - 12/08 75 -165 kW	**37-154127**	**36-154142**	with standard chassis; Heavy Duty Version .
B3	**E 200 CDI, E 200 Kompressor, E 220 CDI, E 230, E 240** 03/02 - 12/08 75 -150 kW	**37-163754**	**36-154159**	with sports suspension; mark: Avantgarde
B3	**E 200 CDI, E 200 Kompressor, E 220 CDI, E 230, E 240, E 270 CDI, E 320** 03/02 - 12/08 75 -165 kW	**37-154127**	**36-154142**	with sports suspension; Heavy Duty Version .; mark: Avantgarde
B3	**E 270 CDI** 03/02 - 12/08 130 kW	**37-154110**	**36-154142**	with standard chassis
B3	**E 270 CDI** 03/02 - 12/08 130 kW	**37-154127**	**36-163779**	with standard chassis; Heavy Duty Version .
B3	**E 270 CDI** 03/02 - 12/08 130 kW	**37-163747**	**36-163731**	with sports suspension; mark: Avantgarde
B4	**E 200 CDI, E 200 CGI, E 200 Kompressor, E 220 CDI, E 230, E 240, E 270 CDI, E 280, E 280 CDI, E 300 BLUETEC, E 320, E 320 CDI, E 350, E 350 CGI, E 400 CDI, E 420 CDI, E200 NGT** 03/02 - 12/08 75 -231 kW	**24-105910**	**24-105927**	with standard chassis; without Airmatic DC
B4	**E 200 CDI, E 200 CGI, E 200 Kompressor, E 220 CDI, E 230, E 240, E 270 CDI, E 280, E 280 CDI, E 300 BLUETEC, E 320, E 320 CDI, E 350, E 350 CGI, E 400 CDI, E 420 CDI, E200 NGT** 03/02 - 12/08 75 -231 kW	**24-121774**	**24-105927**	with off-road suspension; without Airmatic DC
B4	**E 200 CDI, E 200 CGI, E 200 Kompressor, E 220 CDI, E 230, E 240, E 270 CDI, E 280, E 280 CDI, E 300 BLUETEC, E 320, E 320 CDI, E 350, E 350 CGI, E 400 CDI, E 420 CDI, E200 NGT** 03/02 - 12/08 75 -231 kW	**24-121781**	**24-105927**	with sports suspension; without Airmatic DC

M

MERCEDES-BENZ

MERCEDES-BENZ E-CLASS (W211)

B4	**E 200 CDI, E 200 CGI, E 200 Kompressor, E 220 CDI, E 230, E 240, E 270 CDI, E 280, E 280 CDI, E 300 BLUETEC, E 320, E 320 CDI, E 350, E 350 CGI, E 400 CDI, E 420 CDI, E200 NGT** 03/02 - 12/08 75 -231 kW	**24-121798**	**24-105927**	without Airmatic DC; mark: Elegance; mark: Avantgarde
B4 AMC	**3.5 4-matic, E 240 4-matic, E 280 4-matic, E 280 CDI 4-matic, E 320 4-matic, E 320 CDI 4-matic, E 350 4-matic, E 500 4-matic** 10/03 - 12/08 130 -285 kW	**44-181666** **44-181680**	**40-076614** **40-076621** **19-050027**	with Airmatic DC
B4 AMC	**E 55 AMG Kompressor, E 63 AMG** 10/02 - 12/08 350 -378 kW	**44-143657** **44-143664**	**40-076676** **40-076683** **20-070915**	with Airmatic DC
B4 AMC	**E 200 CDI, E 200 CGI, E 200 Kompressor, E 220 CDI, E 240, E 270 CDI, E 320, E 320 CDI, E 400 CDI, E 500** 03/02 - 06/03 75 -225 kW	**44-100834** **44-100827**	**40-076614** **40-076621** **19-050027**	-> CH.Nr.: A 334970; -> CH.Nr.: X 108179; with Airmatic DC
B4 AMC	**E 200 CDI, E 200 CGI, E 200 Kompressor, E 220 CDI, E 240, E 270 CDI, E 320, E 320 CDI, E 400 CDI, E 500** 06/03 - 12/08 75 -225 kW	**44-102265** **44-102272**	**40-076614** **40-076621** **20-101893**	CH.Nr.: X 108180 ->; CH.Nr.: A 334971 ->; with Airmatic DC
B4 AMC	**E 200 CDI, E 200 Kompressor, E 220 CDI, E 230, E 280, E 280 CDI, E 300 BLUETEC, E 320 CDI, E 350, E 350 CGI, E 420 CDI, E 500, E200 NGT** 03/04 - 12/08 100 -285 kW	**44-102265** **44-102272**	**40-076614** **40-076621** **20-101893**	with Airmatic DC
B6 Sport	**E 200 CDI, E 200 CGI, E 200 Kompressor, E 220 CDI, E 230, E 240, E 270 CDI, E 280, E 280 CDI, E 300 BLUETEC, E 320, E 320 CDI, E 350, E 350 CGI, E 400 CDI, E 420 CDI, E200 NGT** 03/02 - 12/08 75 -231 kW	**24-069052**	**24-069069**	with standard chassis; without Airmatic DC
B6 Sport	**E 200 CDI, E 200 CGI, E 200 Kompressor, E 220 CDI, E 230, E 240, E 270 CDI, E 280, E 280 CDI, E 300 BLUETEC, E 320, E 320 CDI, E 350, E 350 CGI, E 400 CDI, E 420 CDI, E200 NGT** 03/02 - 12/08 75 -231 kW	**24-120234**	**24-069083**	with sports suspension; without Airmatic DC
B8	**E 200 CDI, E 200 CGI, E 200 Kompressor, E 220 CDI, E 230, E 240, E 270 CDI, E 280, E 280 CDI, E 300 BLUETEC, E 320, E 320 CDI, E 350, E 350 CGI, E 400 CDI, E 420 CDI, E200 NGT** 03/02 - 12/08 75 -231 kW	**24-069076**	**24-069083**	without Airmatic DC; mark: Avantgarde; mark: Elegance
B8	**E 200 CDI, E 200 CGI, E 200 Kompressor, E 220 CDI, E 230, E 240, E 270 CDI, E 280, E 280 CDI, E 300 BLUETEC, E 320, E 320 CDI, E 350, E 350 CGI, E 400 CDI, E 420 CDI, E200 NGT** 03/02 - 12/08 75 -231 kW	**24-120241**	**24-120227**	with sports suspension; without Airmatic DC
B12 PK	**E 200 CDI, E 200 CGI, E 200 Kompressor, E 220 CDI, E 240, E 350** 03/02 - 12/08 75 -200 kW	**46-181879**		spring pads must be observed; with standard chassis; without Airmatic DC; without ride height adjustment; Conditions see certificates VA: lowering (expertise): 30-35 mm; axle load to: 1095 kg HA: lowering (expertise): 30 mm; axle load to: 1230 kg
B12 PK	**E 200 CDI, E 200 CGI, E 200 Kompressor, E 220 CDI, E 240, E 350** 03/02 - 12/08 75 -200 kW	**46-181879**		spring pads must be observed; without Airmatic DC; mark: Avantgarde, Elegance; without ride height adjustment; Conditions see certificates VA: lowering (expertise): 15-20 mm; axle load to: 1095 kg HA: lowering (expertise): 15 mm; axle load to: 1230 kg

M

MERCEDES-BENZ			
MERCEDES-BENZ E-CLASS (W211)			
B12 PK **E 220 CDI, E 270 CDI, E 320, E 320 CDI** 03/02 - 12/08 100 -165 kW	**46-181862**		spring pads must be observed; with standard chassis; without Airmatic DC; without ride height adjustment; Conditions see certificates VA: lowering (expertise): 35-40 mm; axle load to: 1160 kg HA: lowering (expertise): 30 mm; axle load to: 1230 kg
B12 PK **E 220 CDI, E 270 CDI, E 320, E 320 CDI** 03/02 - 12/08 100 -165 kW	**46-181862**		spring pads must be observed; without Airmatic DC; mark: Avantgarde, Elegance; without ride height adjustment; Conditions see certificates VA: lowering (expertise): 20-25 mm; axle load to: 1160 kg HA: lowering (expertise): 15 mm; axle load to: 1230 kg
B16 PSS9 **E 200 CDI, E 200 CGI, E 200 Kompressor, E 220 CDI, E 230, E 240, E 270 CDI, E 280, E 280 CDI, E 300 BLUETEC, E 320, E 320 CDI, E 350, E 350 CGI, E 400 CDI, E 420 CDI, E200 NGT** 03/02 - 12/08 75 -231 kW	**48-088763**		without Airmatic DC; Conditions see certificates VA: lowering (expertise): 30-50 mm; axle load to: 1175 kg HA: lowering (expertise): 30-50 mm; axle load to: 1255 kg
B16 RC **E 200 CDI, E 200 CGI, E 200 Kompressor, E 220 CDI, E 230, E 240, E 270 CDI, E 280, E 280 CDI, E 300 BLUETEC, E 320, E 320 CDI, E 350, E 350 CGI, E 400 CDI, E 420 CDI, E200 NGT** 03/02 - 12/08 75 -231 kW	**49-132380**		without Airmatic DC; Conditions see certificates VA: lowering (expertise): 30-50 mm; axle load to: 1175 kg HA: lowering (expertise): 30-50 mm; axle load to: 1255 kg
MERCEDES-BENZ E-CLASS T-Model (S211)			
B1 **E 200 T Kompressor, E 220 T CDI, E 230 T, E 240 T, E 270 T CDI, E 320 T, E 320 T CDI** 03/03 - 07/09 110 -165 kW	**12-117864**		VA: without ball bearing
B3 **E 200 Kompressor, E 200 T Kompressor, E 220 T CDI, E 240 T** 03/03 - 07/09 110 -135 kW	**37-154110**		with standard chassis; with ride height adjustment
B3 **E 200 Kompressor, E 200 T Kompressor, E 220 T CDI, E 240 T** 03/03 - 07/09 110 -135 kW	**37-154127**		with standard chassis; Heavy Duty Version .; with ride height adjustment
B3 **E 200 Kompressor, E 200 T Kompressor, E 240 T** 03/03 - 07/09 120 -135 kW	**37-163747**		with standard chassis; mark: Avantgarde; with ride height adjustment
B3 **E 220 T CDI** 03/03 - 07/09 110 -125 kW	**37-163747**		with standard chassis; mark: Avantgarde; with ride height adjustment
B3 **E 220 T CDI** 03/03 - 07/09 110 -125 kW	**37-154127**		with standard chassis; Heavy Duty Version .; mark: Avantgarde; with ride height adjustment
B3 **E 270 T CDI, E 280 T, E 280 T CDI, E 320 T, E 320 T CDI** 03/03 - 07/09 130 -170 kW	**37-154127**		with standard chassis; with ride height adjustment
B3 **E 270 T CDI, E 280 T, E 280 T CDI, E 320 T, E 320 T CDI** 03/03 - 07/09 130 -170 kW	**37-163761**		with standard chassis; mark: Avantgarde; with ride height adjustment
B4 **3.5, E 200 CDI, E 200 Kompressor, E 200 T Kompressor, E 220 CDI, E 220 T CDI, E 230 T, E 240 T, E 270 T CDI, E 280 T, E 280 T CDI, E 320 T, E 320 T CDI, E 350 T** 03/05 - 07/09 100 -215 kW	**24-105910** HA	**24-068741** VO **40-076638**	with standard chassis; without Airmatic DC; mark: Avantgarde; with ride height adjustment
B4 **3.5, E 200 CDI, E 200 Kompressor, E 200 T Kompressor, E 220 CDI, E 220 T CDI, E 230 T, E 240 T, E 270 T CDI, E 280 T, E 280 T CDI, E 320 T, E 320 T CDI, E 350 T** 03/05 - 07/09 100 -215 kW	**24-121781** HA	**40-076638** **24-068734** VO	with sports suspension; without Airmatic DC; with ride height adjustment

MERCEDES-BENZ

MERCEDES-BENZ E-CLASS T-Model (S211)

B4 AMC	**E 200 T Kompressor, E 220 CDI, E 220 T CDI, E 240 T, E 270 T CDI, E 320 T CDI** 03/03 - 06/03 100 -150 kW	**44-100834** **44-100827**	**40-076614** **20-070861** **40-076621** **20-070878**	-> CH.Nr.: A 334970; -> CH.Nr.: X 105579; with Airmatic DC
B4 AMC	**3.5 4-matic, E 240 T 4-matic, E 280 T 4-matic, E 280 T CDI 4-matic, E 320 T 4-matic, E 320 T CDI 4-matic, E 350 T 4-matic, E 500 T 4-matic** 10/03 - 07/09 130 -285 kW	**44-181666** **44-181680**	**i.V.** **40-076614** **i.V.** **40-076621**	with Airmatic DC
B4 AMC	**3.5, E 200 Kompressor, E 220 T CDI, E 280 T, E 280 T CDI, E 320 T, E 320 T CDI, E 350 T, E 500 T** 04/06 - 07/09 125 -285 kW	**44-102265** **44-102272**	**40-076614** **20-070861** **40-076621** **20-070878**	with Airmatic DC
B4 AMC	**E 55 T AMG Kompressor, E 63 AMG** 07/03 - 07/09 350 -378 kW	**44-143657** **44-143664**		with Airmatic DC
B4 AMC	**E 200 CDI, E 200 T Kompressor, E 220 CDI, E 220 T CDI, E 230 T, E 240 T, E 270 T CDI, E 320 T CDI, E 500 T** 06/03 - 07/09 100 -225 kW	**44-102265** **44-102272**	**40-076614** **20-070861** **40-076621** **20-070878**	CH.Nr.: A 334971 ->; CH.Nr.: X 105580 ->; with Airmatic DC
B6 Sport	**3.5, E 200 CDI, E 200 Kompressor, E 200 T Kompressor, E 220 CDI, E 220 T CDI, E 230 T, E 240 T, E 270 T CDI, E 280 T, E 280 T CDI, E 320 T, E 320 T CDI, E 350 T** 03/05 - 07/09 100 -215 kW	**24-069052**	**27-105993**	with standard chassis; without Airmatic DC HA: with ride height adjustment
B8	**3.5, E 200 CDI, E 200 Kompressor, E 200 T Kompressor, E 220 CDI, E 220 T CDI, E 230 T, E 240 T, E 270 T CDI, E 280 T, E 280 T CDI, E 320 T, E 320 T CDI, E 350 T** 03/05 - 07/09 100 -215 kW	**24-069076**	**27-105993**	with sports suspension; without Airmatic DC HA: with ride height adjustment
B12 PK	**E 200 T Kompressor, E 220 CDI, E 220 T CDI, E 230 T, E 240 T, E 350 T** 03/03 - 07/09 100 -200 kW	**46-190499**		without Airmatic DC; Conditions see certificates VA: lowering (expertise): 30-35 mm; axle load to: 1095 kg HA: with ride height adjustment; lowering (expertise): 30 mm
B12 PK	**E 220 T CDI, E 270 T CDI, E 280 T CDI, E 320 T, E 320 T CDI, E 350 T** 03/03 - 07/09 110 -200 kW	**46-190505**		without Airmatic DC; Conditions see certificates VA: lowering (expertise): 30-35 mm; axle load to: 1160 kg HA: with ride height adjustment; lowering (expertise): 30 mm

MERCEDES-BENZ E-CLASS (W212)

B1	**E 200 CDI, E 200 CGI, E 220 CDI, E 250 CDI, E 250 CDI 4-matic, E 250 CGI, E 300, E 300 CDI, E 350 4-matic, E 350 BlueTEC, E 350 CDI, E 350 CDI 4-matic, E 350 CGI, E 500, E 500 4-matic, E350** 01/09 - 100 -300 kW	**12-226344**		VA: with ball bearing; without pneumatic suspension
B4	**E 200 CDI, E 200 CGI, E 220 CDI, E 250 CDI, E 250 CGI, E 300, E 300 BlueEfficiency, E 300 CDI, E 350 BlueTEC, E 350 CDI, E 350 CGI, E 500, E350** 01/09 - 100 -300 kW	**22-194091**	**24-194112**	with standard chassis; without Airmatic DC
B4	**E 200 CDI, E 200 CGI, E 220 CDI, E 250 CDI, E 250 CGI, E 300, E 300 BlueEfficiency, E 300 CDI, E 350 BlueTEC, E 350 CDI, E 350 CGI, E 500, E350** 01/09 - 100 -300 kW	**22-194107**	**24-194129**	with off-road suspension; without Airmatic DC
B4	**E 250 CDI 4-matic, E 350 4-matic, E 350 CDI 4-matic, E 500 4-matic, E350 4-matic** 01/09 - 150 -300 kW	**i.V.**	**24-194112**	with standard chassis; without Airmatic DC

M

MERCEDES-BENZ

MERCEDES-BENZ E-CLASS (W212)

B6 Sport	**E 200 CDI, E 200 CGI, E 220 CDI, E 250 CDI, E 250 CGI, E 300, E 300 BlueEfficiency, E 300 CDI, E 350 BlueTEC, E 350 CDI, E 350 CGI, E 500, E350** 01/09 - 100 -300 kW	**35-166863**	**24-166874**	with standard chassis; without Airmatic DC
B6 Sport	**E 250 CDI 4-matic, E 350 4-matic, E 350 CDI 4-matic, E 500 4-matic, E350 4-matic** 01/09 - 150 -300 kW	**35-191117**	**24-166874**	without Airmatic DC
B8	**E 200 CDI, E 200 CGI, E 220 CDI, E 250 CDI, E 250 CGI, E 300, E 300 BlueEfficiency, E 300 CDI, E 350 BlueTEC, E 350 CDI, E 350 CGI, E 500, E350** 01/09 - 100 -300 kW	**35-166887**	**24-166898**	without Airmatic DC; mark: Avantgarde; with AMG Sports Package
B12 PK	**E 200 CGI, E 250 CGI** 01/09 - 135 -150 kW	**46-182067**		spring pads must be observed; with standard chassis; without Airmatic DC; without ride height adjustment; Conditions see certificates VA: lowering (expertise): 30 mm; axle load to: 1160 kg HA: lowering (expertise): 30 mm; axle load to: 1275 kg
B12 PK	**E 200 CGI, E 250 CGI** 01/09 - 135 -150 kW	**46-182074**		spring pads must be observed; without Airmatic DC; mark: Avantgarde; without ride height adjustment; Conditions see certificates VA: lowering (expertise): 15 mm; axle load to: 1200 kg HA: lowering (expertise): 15 mm; axle load to: 1275 kg
B12 PK	**E 200 CDI, E 220 CDI, E 250 CDI, E 300, E 300 BlueEfficiency, E 300 CDI, E 350 BlueTEC, E 350 CDI, E 350 CGI, E350** 01/09 - 100 -225 kW	**46-182074**		spring pads must be observed; with standard chassis; without Airmatic DC; without ride height adjustment; Conditions see certificates VA: lowering (expertise): 30 mm; axle load to: 1200 kg HA: lowering (expertise): 30 mm; axle load to: 1275 kg
B12 PK	**E 200 CDI, E 220 CDI, E 250 CDI, E 300, E 300 BlueEfficiency, E 300 CDI, E 350 BlueTEC, E 350 CDI, E 350 CGI, E350** 01/09 - 100 -225 kW	**46-182074**		spring pads must be observed; without Airmatic DC; mark: Avantgarde; without ride height adjustment; Conditions see certificates VA: lowering (expertise): 15 mm; axle load to: 1190 kg HA: lowering (expertise): 15 mm; axle load to: 1240 kg
B16 PSS10	**E 200 CDI, E 200 CGI, E 220 CDI, E 250 CDI, E 250 CGI, E 300, E 300 BlueEfficiency, E 300 CDI, E 350 BlueTEC, E 350 CDI, E 350 CGI, E 500, E350** 01/09 - 100 -300 kW	**48-166560**		with standard chassis; without Airmatic DC; Conditions see certificates VA: lowering (expertise): 30-55 mm HA: lowering (expertise): 30-50 mm

MERCEDES-BENZ E-CLASS T-Model (S212)

B1	**E 200 CDI, E 200 CGI, E 220 CDI, E 250 CDI, E 250 CGI, E 300, E 350, E 350 4-matic, E 350 BlueTEC, E 350 CDI, E 350 CDI 4-matic, E 350 CDI All-wheel Drive 4-matic, E 350 CGI, E 500, E 500 4-matic, E350, E350 4-matic** 08/09 - 100 -300 kW	**12-226344**		VA: with ball bearing; without pneumatic suspension
B4	**E 200 CDI, E 200 CGI, E 220 CDI, E 250 CDI, E 250 CGI, E 300, E 350, E 350 BlueTEC, E 350 CDI, E 350 CGI, E 500, E350** 08/09 - 100 -300 kW	**22-194091**	**24-194136**	with standard chassis; with off-road suspension; without Airmatic DC
B6 Sport	**E 350 4-matic, E 350 CDI 4-matic, E 350 CDI All-wheel Drive 4-matic, E 500 4-matic, E350 4-matic** 11/09 - 170 -300 kW	**35-191117**	**24-191128**	without Airmatic DC
B6 Sport	**E 200 CDI, E 200 CGI, E 220 CDI, E 250 CDI, E 250 CGI, E 300, E 350, E 350 BlueTEC, E 350 CDI, E 350 CGI, E 500, E350** 08/09 - 100 -300 kW	**35-166863**	**24-171014**	with standard chassis; without Airmatic DC

MERCEDES-BENZ

MERCEDES-BENZ E-CLASS T-Model (S212)

B8	**E 200 CDI, E 200 CGI, E 220 CDI, E 250 CDI, E 250 CGI, E 300, E 350, E 350 BlueTEC, E 350 CDI, E 350 CGI, E 500, E350** 08/09 - 100 -300 kW	**35-166887**	**24-171014**	without Airmatic DC; mark: Avantgarde

MERCEDES-BENZ E-CLASS Coupe (C207)

B4	**E 200 CGI, E 220 CDI, E 250 CDI, E 250 CGI, E 300, E 350, E 350 CDI, E 350 CGI, E 500** 01/09 - 125 -300 kW	**22-197849**	**24-196901**	with standard chassis
B6 Sport	**E 200 CGI, E 220 CDI, E 250 CDI, E 250 CGI, E 300, E 350, E 350 CDI, E 350 CGI, E 500** 01/09 - 125 -300 kW	**35-141846**	**24-141857**	
B14	**E 200 CGI, E 220 CDI, E 250 CDI, E 250 CGI, E 300, E 350, E 350 CDI, E 350 CGI, E 500** 01/09 - 125 -300 kW	**47-141179**		Conditions see certificates VA: lowering (expertise): 10-30 mm; axle load to: 1110 kg HA: lowering (expertise): 10-30 mm; axle load to: 1225 kg
B16 PSS10	**E 200 CGI, E 220 CDI, E 250 CDI, E 250 CGI, E 300, E 350, E 350 CDI, E 350 CGI, E 500** 01/09 - 125 -300 kW	**48-141147**		Conditions see certificates VA: lowering (expertise): 10-30 mm; axle load to: 1110 kg HA: lowering (expertise): 10-30 mm; axle load to: 1225 kg

MERCEDES-BENZ E-CLASS Convertible (A207)

B6 Sport	**E 200 CGI, E 220 CDI, E 250 CDI, E 250 CGI, E 300, E 350, E 350 CDI, E 350 CGI, E 500** 01/10 - 125 -300 kW	**35-141846**	**24-141857**	
B14	**E 200 CGI, E 220 CDI, E 250 CDI, E 250 CGI, E 300, E 350, E 350 CDI, E 350 CGI, E 500** 01/10 - 125 -300 kW	**47-141179**		Conditions see certificates VA: lowering (expertise): 10-30 mm; axle load to: 1110 kg HA: lowering (expertise): 10-30 mm; axle load to: 1225 kg
B16 PSS10	**E 200 CGI, E 220 CDI, E 250 CDI, E 250 CGI, E 300, E 350, E 350 CDI, E 350 CGI, E 500** 01/10 - 125 -300 kW	**48-141147**		Conditions see certificates VA: lowering (expertise): 10-30 mm; axle load to: 1110 kg HA: lowering (expertise): 10-30 mm; axle load to: 1225 kg

MERCEDES-BENZ PONTON (W180)

B4	**220 S** 01/57 - 12/59 78 kW	**24-000024**	**24-000123**	

MERCEDES-BENZ HECKFLOSSE (W111)

B4	**220 B, 220 SB, 220 SEB, 230 S** 08/59 - 01/68 70 -88 kW	**24-005272** **18-002461**	**24-005371**	

MERCEDES-BENZ COUPE (W111)

B4	**220 SEB, 250 SE, 280 SE, 280 SE 3.5** 01/61 - 12/71 88 -147 kW	**24-005272** **18-002461**	**24-005371**	

MERCEDES-BENZ S-CLASS (W108, W109)

B3	**250 S, 250 SE, 280 S, 280 SE,SEL** 01/66 - 08/72 96 -118 kW		**36-159420**	with standard chassis
B3	**280 SE,SEL 3.5** 03/71 - 08/72 147 kW	**36-159444**	**36-159420**	with standard chassis
B4	**250 S, 250 SE, 280 S, 280 SE,SEL, 280 SE,SEL 3.5** 01/66 - 08/72 96 -147 kW	**24-005272** **18-002461**	**24-005371**	

MERCEDES-BENZ				
MERCEDES-BENZ S-CLASS (W108, W109)				
B4	**300 SEL, 300 SEL 3.5, 300 SEL 6.3** 01/68 - 08/72 118 -184 kW	**24-005074** **18-002461**	**24-005340**	
MERCEDES-BENZ PULLMANN				
B6 Sport	**600** 09/64 - 01/79 184 kW	*24-005067*	*24-005166*	VA: Quick Repair Service .; Used part return required . HA: Quick Repair Service .; Used part return required .
MERCEDES-BENZ S-CLASS (W116)				
B3	**280 S, 280 SE,SEL** 08/72 - 07/80 115 -136 kW	*36-133826*	**36-129799**	with standard chassis
B3	**280 S, 280 SE,SEL** 08/72 - 07/80 115 -136 kW	**36-133833**	**36-129744**	with standard chassis; Heavy Duty Version .
B3	**350 SE,SEL, 4.5, 450 SE,SEL, 450 SEL 6.9** 07/75 - 04/80 143 -210 kW	**36-133833**	**36-129799**	with standard chassis
B3	**350 SE,SEL, 4.5, 450 SE,SEL, 450 SEL 6.9** 07/75 - 04/80 143 -210 kW		**36-129744**	with standard chassis; Heavy Duty Version .
B4	**280 S, 280 SE,SEL, 350 SE,SEL, 4.5, 450 SE,SEL, 450 SEL 6.9** 08/72 - 07/80 115 -210 kW	**24-007061**	**24-011846**	with standard chassis
B4	**280 S, 280 SE,SEL, 350 SE,SEL, 4.5, 450 SE,SEL, 450 SEL 6.9** 08/72 - 07/80 115 -210 kW	**24-007054**	**24-005111**	mark: Heavy Duty
MERCEDES-BENZ SL Coupe (C107)				
B3	**280 SLC** CH-Nr. - 09/81 130 kW		**36-129782**	CH.Nr.: 022 008366 ->; CH.Nr.: 042 007870 ->; with standard chassis
B3	**280 SLC, 350 SLC, 380 SLC, 450 SLC, 450 SLC 5.0** 01/73 - CH-Nr. 130 -177 kW	**36-197910**	**36-129782**	-> CH.Nr.: 022 008365; -> CH.Nr.: 042 007869; with standard chassis
B3	**280 SLC** 08/74 - 09/81 136 kW		**36-129782**	with standard chassis
B3	**350 SLC** 03/76 - 02/80 143 kW		**36-129782**	with standard chassis
B3	**350 SLC, 380 SLC** 01/72 - 08/81 147 -160 kW		**36-129782**	with standard chassis
B3	**450 SLC, 450 SLC 5.0** 01/73 - 02/80 160 -177 kW		**36-129782** **36-159376**	with standard chassis
B4	**280 SLC, 350 SLC, 380 SLC, 450 SLC, 450 SLC 5.0** 01/73 - 09/81 130 -177 kW	**24-007078**	**24-005111**	without ride height adjustment
MERCEDES-BENZ S-CLASS (W126)				
B3	**260 SE, 280 S, 280 SE,SEL, 3.8, 300 SE,SEL, 380 SE,SEL** 12/79 - 06/91 115 -160 kW	**36-133840**	**36-129799**	with standard chassis
B3	**260 SE, 280 S, 280 SE,SEL, 3.8, 300 SE,SEL, 380 SE,SEL, 420 SE,SEL, 500 SE,SEL, 500 SE,SEL CAT, 560 SE,SEL** 12/79 - 06/91 115 -220 kW		**36-129744**	with standard chassis; Heavy Duty Version .
B3	**260 SE, 280 S, 280 SE,SEL, 3.8, 300 SE,SEL, 380 SE,SEL, 420 SE,SEL, 500 SE,SEL, 500 SE,SEL CAT, 560 SE,SEL** 12/79 - 06/91 115 -220 kW		**36-203000**	with standard chassis; with ride height adjustment

MERCEDES-BENZ

MERCEDES-BENZ S-CLASS (W126)

B3	**420 SE,SEL, 500 SE,SEL, 500 SE,SEL CAT** 09/85 - 06/91 150 -195 kW	**36-133857**	**36-129799**	with standard chassis
B3	**560 SE,SEL** 10/85 - 06/91 178 -220 kW	**36-133864**	**36-154227**	with standard chassis
B4	**260 SE, 280 S, 280 SE,SEL, 3.8, 300 SE,SEL, 380 SE,SEL, 420 SE,SEL, 500 SE,SEL, 500 SE,SEL CAT** 12/79 - 06/91 115 -195 kW	**24-011839**	**24-011846**	with standard chassis; without ride height adjustment
B4	**260 SE, 280 S, 280 SE,SEL, 3.8, 300 SE,SEL, 380 SE,SEL, 420 SE,SEL, 500 SE,SEL, 500 SE,SEL CAT** 12/79 - 06/91 115 -195 kW	**24-005012**	**24-005111**	mark: Heavy Duty; without ride height adjustment
B4	**560 SE,SEL** 10/85 - 06/91 178 -220 kW	**24-011839**		with standard chassis
B4	**560 SE,SEL** 10/85 - 06/91 178 -220 kW	**24-005012**		with off-road suspension
B8	**260 SE, 280 S, 280 SE,SEL, 3.8, 300 SE,SEL, 380 SE,SEL, 420 SE,SEL, 500 SE,SEL, 500 SE,SEL CAT, 560 SE,SEL** 12/79 - 06/91 115 -220 kW	**24-015356**	**24-015363**	without ride height adjustment
B12 PK	**260 SE, 280 S, 280 SE,SEL, 300 SE,SEL, 380 SE,SEL** 12/79 - 06/91 115 -160 kW	**46-181398**		spring pads must be observed; without ride height adjustment; Conditions see certificates VA: lowering (expertise): 40-45 mm; axle load to: 1110 kg HA: lowering (expertise): 30-35 mm; axle load to: 1160 kg

MERCEDES-BENZ S-CLASS Coupe (C126)

B3	**380 SEC** 10/81 - 07/85 150 kW	**36-133840**	**36-129799**	with standard chassis
B3	**380 SEC, 420 SEC, 500 SEC, 500 SEC CAT, 560 SEC** 10/81 - 12/89 150 -220 kW		**36-129744**	with standard chassis; Heavy Duty Version .
B3	**420 SEC, 500 SEC, 500 SEC CAT** 09/85 - 06/91 150 -195 kW	**36-133857**	**36-129799**	with standard chassis
B3	**560 SEC** 10/85 - 06/91 178 -220 kW	**36-133864**	**36-129799**	with standard chassis
B4	**380 SEC, 420 SEC, 500 SEC, 500 SEC CAT** 10/81 - 06/91 150 -195 kW	**24-011839**	**24-011846**	with standard chassis
B4	**380 SEC, 420 SEC, 500 SEC, 500 SEC CAT** 10/81 - 06/91 150 -195 kW	**24-005012**	**24-005111**	mark: Heavy Duty; without ride height adjustment
B4	**560 SEC** 10/85 - 06/91 178 -220 kW	**24-011839**		with standard chassis
B4	**560 SEC** 10/85 - 06/91 178 -220 kW	**24-005012**		mark: Heavy Duty
B8	**380 SEC, 420 SEC, 500 SEC, 500 SEC CAT, 560 SEC** 10/81 - 12/89 150 -220 kW	**24-015356**	**24-015363**	without ride height adjustment
B12 PK	**380 SEC** 10/81 - 07/85 150 kW	**46-181398**		spring pads must be observed; without ride height adjustment; Conditions see certificates VA: lowering (expertise): 40-45 mm; axle load to: 1110 kg HA: lowering (expertise): 30-35 mm; axle load to: 1160 kg

MERCEDES-BENZ S-CLASS (W140)

B3	**300 SE 2.8, 300 SE,SEL/S320, S 280** 01/95 - 10/98 142 -170 kW	**36-129522**	**36-129577**	with standard chassis

M

MERCEDES-BENZ				
MERCEDES-BENZ S-CLASS (W140)				
B3	**300 SE 2.8, 300 SE,SEL/S320, S 280** 03/91 - 10/98 142 -170 kW	*36-129539*		with standard chassis; Heavy Duty Version .
B3	**300 SE,SEL/S320, S 280, S 350 Turbo-D** 03/91 - 12/94 110 -170 kW	**36-129522**	**36-129560**	with standard chassis
B3	**300 SE,SEL/S320, S 280** 03/91 - 12/94 142 -170 kW		**36-154050**	with standard chassis; with ride height adjustment
B3	**400 SE,SEL/S420, 500 SE,SEL, S 420, S 500** 02/91 - 12/94 205 -240 kW	*36-129539*	**36-129560**	with standard chassis
B3	**400 SE,SEL/S420, 500 SE,SEL, S 420, S 500** 01/95 - 10/98 205 -240 kW	*36-129539*	**36-129577**	with standard chassis
B3	**400 SE,SEL/S420, 500 SE,SEL, 600 SE,SEL, S 420, S 500, S 600** 02/91 - 10/98 205 -300 kW	**36-129546**		with standard chassis; Heavy Duty Version .
B3	**400 SE,SEL/S420, 500 SE,SEL, S 420, S 500** 02/91 - 12/94 205 -240 kW		**36-154050**	with standard chassis; with ride height adjustment
B3	**S 600** 01/93 - 10/98 290 kW	**36-129553**	**36-159468**	with standard chassis; with ride height adjustment
B3	**600 SE,SEL** 04/91 - 12/92 300 kW	**36-129553**	**36-159512**	with standard chassis; with ride height adjustment
B3	**S 300 Turbo-D** 05/96 - 10/98 130 kW	**36-129546**	**36-129577**	with standard chassis
B3	**S 300 Turbo-D** 05/96 - 10/98 130 kW		**36-154067**	with standard chassis; with ride height adjustment
B3	**S 350 Turbo-D** 01/95 - 10/98 110 kW	**36-129546**	**36-129577**	with standard chassis
B4	**300 SE 2.8, 300 SE,SEL/S320, 400 SE,SEL/S420, 500 SE,SEL, S 280, S 300 Turbo-D, S 350 Turbo-D, S 420, S 500** 02/91 - 10/98 110 -240 kW	**24-017060** **18-140644**	**24-017077**	with standard chassis
B4	**300 SE 2.8, 300 SE,SEL/S320, 400 SE,SEL/S420, 500 SE,SEL, S 280, S 300 Turbo-D, S 350 Turbo-D, S 420, S 500** 02/91 - 10/98 110 -240 kW	**24-016827** **18-140644**	**24-016834**	mark: Tropen
B8	**300 SE 2.8, 300 SE,SEL/S320, 400 SE,SEL/S420, 500 SE,SEL, S 280, S 300 Turbo-D, S 350 Turbo-D, S 420, S 500** 02/91 - 10/98 110 -240 kW	**24-015370**	**24-015387**	without electronic suspension control; with sports suspension; without ride height adjustment
MERCEDES-BENZ S-CLASS Coupe (C140)				
B3	**SEC/CL 420, SEC/CL 500** 01/95 - 02/99 205 -235 kW	*36-129539*	**36-129577**	with standard chassis
B3	**SEC/CL 420** 10/94 - 12/94 205 kW	*36-129539*	**36-129560**	with standard chassis
B3	**SEC/CL 500** 10/92 - 12/94 235 kW	*36-129539*	**36-129560**	with standard chassis
B3	**SEC/CL 600** 09/92 - 02/99 290 kW	**36-129553**	**36-159512**	with standard chassis; with ride height adjustment
B4	**SEC/CL 420, SEC/CL 500, SEC/CL 600** 09/92 - 02/99 205 -290 kW	**24-017060**	**24-017077**	with standard chassis

M

MERCEDES-BENZ

MERCEDES-BENZ S-CLASS Coupe (C140)

B8	**SEC/CL 420, SEC/CL 500** 10/92 - 02/99 205 -235 kW	**24-015370**	**24-015387**	without electronic suspension control; with sports suspension; without ride height adjustment

MERCEDES-BENZ S-CLASS (W220)

B4 AMC	**S 280, S 320, S 320 CDI, S 350, S 400 CDI, S 430, S 500, S 600** 10/98 - 08/05 145 -368 kW	**44-042295**	**44-042301**	with Airmatic DC; without ABC
B4 AMC	**S 280, S 320, S 320 CDI, S 350, S 400 CDI, S 430, S 500, S 600** 10/98 - 08/05 145 -368 kW	**44-047023**	**44-046972**	with Airmatic DC; without ABC; For armoured vehicles; Armour Class: B4
B4 AMC	**S 280, S 320, S 320 CDI, S 350, S 400 CDI, S 430, S 500, S 600** 10/98 - 08/05 145 -368 kW	**44-045357**	**44-045821**	with Airmatic DC; without ABC; For armoured vehicles; Armour Class: B7
B4 AMC	**S 350 4-matic, S 430 4-matic, S 500 4-matic** 09/02 - 08/05 180 -225 kW	**44-051518** **44-051525**	**44-042301**	with Airmatic DC; without ABC

MERCEDES-BENZ S-CLASS (W221)

B4 AMC	**S 250 CDI, S 320 CDI, S 350, S 420 CDI, S 450, S 500, S 600** 12/05 - 150 -380 kW	**44-109462**	**44-109479** **44-109486**	with air suspension
B4 AMC	**S 250 CDI, S 320 CDI, S 350, S 420 CDI, S 450, S 500, S 600** 12/05 - 150 -380 kW	**44-110505** **44-110499**	**44-192075** **44-192082**	For armoured vehicles; with air suspension; Armour Class: B7
B4 AMC	**S 250 CDI, S 320 CDI, S 350, S 420 CDI, S 450, S 500, S 600** 12/05 - 150 -380 kW	**44-140786** **44-140779**	**44-192075** **44-192082**	mark: Pullman; For armoured vehicles; with air suspension; Armour Class: B7
B4 AMC	**S 320 CDI 4-matic, S 350 4Matic, S 350 4-matic, S 450 4-matic, S 500 4Matic, S 500 4-matic** 10/05 - 173 -320 kW	**44-110482** **44-110475**	**44-109479** **44-109486**	

MERCEDES-BENZ PAGODE (W113)

B4	**230 SL, 250 SL, 280 SL** 01/63 - 03/71 110 -125 kW	**24-005296** **18-002461**	**24-005395**	

MERCEDES-BENZ CABRIOLET (W111)

B4	**280 SE 3.5** 01/69 - 12/71 147 kW	**24-005272** **18-002461**	**24-005371**	

MERCEDES-BENZ SL (R107)

B3	**280 SL, 300 SL, 350 SL** 05/71 - 08/89 130 -143 kW		**36-129782**	with standard chassis
B3	**380 SL, 420 SL, 450 SL, 500 SL** 05/80 - 09/89 150 -195 kW		**36-159376**	Not for United States of America; with standard chassis
B4	**280 SL, 350 SL, 380 SL, 450 SL, 500 SL** 10/72 - 08/85 130 -177 kW	**24-007078**	**24-005111**	without ride height adjustment
B4	**300 SL, 420 SL, 500 SL** 09/85 - 09/89 132 -195 kW	**24-005241**	**24-005111**	without ride height adjustment

MERCEDES-BENZ SL (R129)

B3	**300 SL, 300 SL-24** 03/89 - 08/93 140 -170 kW	**36-159567**	**36-159505**	with standard chassis
B3	**300 SL, 300 SL-24** 03/89 - 08/93 140 -170 kW	**36-159550**		with standard chassis; with ride height adjustment

M

MERCEDES-BENZ				
MERCEDES-BENZ SL (R129)				
B3	**320, 600, 600 SL** 02/92 - 10/01 165 -300 kW	**36-159529**	**36-159475**	with standard chassis
B3	**500, 500 SL** 09/89 - 10/01 225 -240 kW	**36-159543**	**36-202799**	with standard chassis; without ADS
B3	**500, 500 SL** 09/89 - 10/01 225 -240 kW	**36-159536**		with standard chassis; with ADS; with ride height adjustment
B4	**280, 320, 500** 08/93 - 10/01 142 -225 kW	**22-002327** **18-140651**	**24-013161**	without ADS
B4	**300 SL, 300 SL-24, 500 SL** 03/89 - 01/92 140 -240 kW	**22-003645** **18-140651**	**24-013161**	-> CH.Nr.: F054767
B4	**300 SL, 300 SL-24, 500, 500 SL** 02/92 - 10/01 140 -240 kW	**22-002327** **18-140651**	**24-013161**	CH.Nr.: F054768 ->
B6 Sport	**280, 320, 500, 55 AMG, 60 AMG, 600, 600 SL** 02/92 - 10/01 142 -350 kW	**22-041760**	**24-022576**	without ADS
B6 Sport	**300 SL, 300 SL-24, 500 SL** 02/92 - 08/93 140 -240 kW	**22-041760**	**24-022576**	CH.Nr.: F054768 ->; without ADS
B12 PK	**280, 320, 500** 09/92 - 10/01 142 -235 kW	**46-193926**		without ADS; Conditions see certificates VA: lowering (expertise): 30 mm; axle load to: 1080 kg HA: lowering (expertise): 30 mm; axle load to: 1190 kg
B12 PK	**300 SL, 300 SL-24, 500 SL** 02/92 - 08/93 140 -240 kW	**46-193926**		CH.Nr.: F054768 ->; without ADS; Conditions see certificates VA: lowering (expertise): 30 mm; axle load to: 1080 kg HA: lowering (expertise): 30 mm; axle load to: 1190 kg
MERCEDES-BENZ SL (R230)				
B4	**280, 300, 350, 500, 55 AMG, 55 AMG Kompressor, 600, 63AMG, 65 AMG** 03/04 - 170 -450 kW	**24-217552**	**24-196925**	with standard chassis; without ABC; mark: ex. AMG Black Series
MERCEDES-BENZ SLK (R170)				
B3	**200** 09/96 - 03/00 100 kW	**36-129652**	**36-133666**	with standard chassis
B3	**200 Kompressor, 230 Kompressor, 320** 09/96 - 04/04 120 -160 kW	**36-129607**	**36-133666**	with standard chassis
B4	**200, 200 Kompressor, 230 Kompressor, 32 AMG Kompressor, 320** 09/96 - 04/04 100 -260 kW	**24-100878** **18-140651**	**24-100885**	mono-tube
B6 Sport	**200, 200 Kompressor, 230 Kompressor, 32 AMG Kompressor, 320** 09/96 - 04/04 100 -260 kW	**24-024648**	**24-024655**	
B8	**200, 200 Kompressor, 230 Kompressor, 32 AMG Kompressor, 320** 09/96 - 04/04 100 -260 kW	**24-025256**	**24-025263**	
B12 PK	**200, 200 Kompressor, 230 Kompressor, 320** 09/96 - 04/04 100 -160 kW	**46-181756**		spring pads must be observed; without ride height adjustment; Conditions see certificates VA: lowering (expertise): 30 mm; axle load to: 845 kg HA: lowering (expertise): 30 mm; axle load to: 820 kg
B14	**200, 200 Kompressor, 230 Kompressor, 32 AMG Kompressor, 320** 09/96 - 04/04 100 -260 kW	**47-119536**		Conditions see certificates VA: lowering (expertise): 35-55 mm; axle load to: 905 kg HA: lowering (expertise): 35-55 mm; axle load to: 850 kg
B16 PSS9	**200, 200 Kompressor, 230 Kompressor, 32 AMG Kompressor, 320** 09/96 - 04/04 100 -260 kW	**48-119542**		Conditions see certificates VA: lowering (expertise): 35-55 mm; axle load to: 905 kg HA: lowering (expertise): 35-55 mm; axle load to: 850 kg

M

MERCEDES-BENZ				
MERCEDES-BENZ SLK (R171)				
B3	**200 Kompressor** 03/04 - 120 -135 kW	**37-171995**	**36-171989**	with standard chassis
B3	**200 Kompressor** 03/04 - 120 -135 kW	**37-172008**	**36-171989**	with standard chassis; Heavy Duty Version .
B3	**280, 300, 350** 06/04 - 170 -224 kW	**37-172008**	**36-171989**	with standard chassis
B4	**200 Kompressor, 280, 300, 350** 03/04 - 120 -224 kW	**22-164858**	**24-188050**	with standard chassis
B6 Sport	**200 Kompressor, 280, 300, 350** 03/04 - 120 -224 kW	**35-113430**	**24-113441**	with standard chassis
B8	**200 Kompressor, 280, 350, 55 AMG** 03/04 - 120 -265 kW	**35-113454**	**24-113465**	with sports suspension
B8	**300** 04/09 - 170 kW	**35-113454**	**24-113465**	with sports suspension
B8	**350** 01/08 - 224 kW	**35-113454**	**24-113465**	with sports suspension
B12 PK	**200 Kompressor** 03/04 - 120 -135 kW	**46-182043**		spring pads must be observed; without ride height adjustment; Conditions see certificates VA: lowering (expertise): 25 mm; axle load to: 840 kg HA: lowering (expertise): 25 mm; axle load to: 940 kg
B12 PK	**280, 300, 350** 06/04 - 170 -224 kW	**46-182050**		spring pads must be observed; without ride height adjustment; Conditions see certificates VA: lowering (expertise): 25 mm; axle load to: 910 kg HA: lowering (expertise): 25 mm; axle load to: 940 kg
B14	**200 Kompressor, 280, 300, 350** 03/04 - 120 -224 kW	**47-116115**		without AMG Sports Package; Conditions see certificates VA: lowering (expertise): 35-45 mm; axle load to: 910 kg HA: lowering (expertise): 35-45 mm; axle load to: 940 kg
B16 PSS9	**200 Kompressor, 280, 300, 350** 03/04 - 120 -224 kW	**48-116077**		without AMG Sports Package; Conditions see certificates VA: lowering (expertise): 35-45 mm; axle load to: 910 kg HA: lowering (expertise): 35-45 mm; axle load to: 940 kg
MERCEDES-BENZ SLK (R172)				
B4	**200, 250, 350** 02/11 - 135 -225 kW	**i.V.**	**24-218245**	with standard chassis
MERCEDES-BENZ M-CLASS (W163)				
B1	**ML 230, ML 270 CDI, ML 320, ML 350, ML 400 CDI, ML 430, ML 500** 02/98 - 06/05 110 -215 kW		**12-173495**	
B3	**ML 230, ML 270 CDI, ML 320, ML 350, ML 400 CDI, ML 430, ML 500** 02/98 - 06/05 110 -215 kW		**36-134335**	with standard chassis
B3	**ML 230, ML 270 CDI, ML 320, ML 350, ML 400 CDI, ML 430, ML 500** 02/98 - 06/05 110 -215 kW		**36-202126**	with standard chassis; Heavy Duty Version .
B4	**ML 230, ML 320, ML 430** 02/98 - 10/98 110 -200 kW	**19-132501**		VA: -> CH.Nr.: A145271; -> CH.Nr.: X707754
B4	**ML 230, ML 270 CDI, ML 320, ML 430** 10/98 - 09/00 110 -200 kW	**19-132501**	**19-124568**	VA: -> CH.Nr.: A145271; -> CH.Nr.: X707754 HA: Without spring; Without suspension strut support bearing
B4	**ML 230, ML 270 CDI, ML 320, ML 430** 10/98 - 09/00 110 -200 kW	**19-132501**	**41-173435**	HA: with spring; With suspension strut support bearing
B4	**ML 230, ML 270 CDI, ML 320, ML 350, ML 400 CDI, ML 430, ML 500** 09/00 - 06/05 110 -215 kW	**19-124551**	**19-124568**	VA: CH.Nr.: A145272 ->; CH.Nr.: X707755 -> HA: Without spring; Without suspension strut support bearing

M

MERCEDES-BENZ			
MERCEDES-BENZ M-CLASS (W163)			
B4 **ML 230, ML 270 CDI, ML 320, ML 350, ML 400 CDI, ML 430, ML 500** 09/00 - 06/05 110 -215 kW	**19-124551** HO	**41-173435**	VA: CH.Nr.: A145272 ->; CH.Nr.: X707755 ->; HA: with spring; With suspension strut support bearing
B6 Offroad **ML 230, ML 320, ML 430** 02/98 - 10/98 110 -200 kW	**24-064569** HO	**24-029858** HI	HA: Without spring; Without suspension strut support bearing; Only in connection with A 163 350 09 06; Only in connection with A 163 350 10 06
B6 Offroad **ML 230, ML 270 CDI, ML 320, ML 430** 10/98 - 09/00 110 -200 kW	**24-064569** HO	**24-029858** HI	-> CH.Nr.: A1452719; -> CH.Nr.: X707754; HA: Without spring; Without suspension strut support bearing
B6 Offroad **ML 230, ML 270 CDI, ML 320, ML 350, ML 400 CDI, ML 430, ML 55 AMG** 09/00 - 06/05 110 -255 kW	**24-126649** HO	**24-029858** HI	CH.Nr.: A145272 ->; CH.Nr.: X707755 ->; HA: Without spring; Without suspension strut support bearing
B6 Offroad **ML 500** 09/01 - 06/05 215 kW	**24-126649** HO	**24-029858** HI	HA: Without spring; Without suspension strut support bearing
MERCEDES-BENZ M-CLASS (W164)			
B3 **ML 280 CDI 4-matic, ML 300 CDI 4-matic, ML 320 CDI 4-matic, ML 350 4-matic, ML 350 BlueTEC 4-matic, ML 350 CDI 4-matic, ML 420 CDI 4-matic, ML 450 CDI 4-matic, ML 500 4-matic, ML 63 AMG 4-matic** 07/05 - 140 -375 kW	**36-166640**	**36-165599**	with standard chassis; with coil-spring suspension
B3 **ML 280 CDI 4-matic, ML 300 CDI 4-matic, ML 320 CDI 4-matic, ML 350 4-matic, ML 350 BlueTEC 4-matic, ML 350 CDI 4-matic, ML 420 CDI 4-matic, ML 450 CDI 4-matic, ML 500 4-matic** 07/05 - 140 -285 kW	**36-200818**	**36-201853**	with standard chassis; Heavy Duty Version .; with coil-spring suspension
B4 **ML 280 CDI 4-matic, ML 300 CDI 4-matic, ML 320 CDI 4-matic, ML 350 4-matic, ML 350 BlueTEC 4-matic, ML 350 CDI 4-matic, ML 420 CDI 4-matic, ML 450 CDI 4-matic, ML 500 4-matic, ML 63 AMG 4-matic** 07/05 - 140 -375 kW	**24-166652** HD **12-167616** SP	**24-144834** HD	with standard chassis; with coil-spring suspension
B4 AMC **ML 63 AMG 4-matic** 01/06 - 375 kW	**44-146108**	**24-144919** XHD **40-118673**	with ADS; with air suspension
B4 AMC **ML 280 CDI 4-matic, ML 300 CDI 4-matic, ML 320 CDI 4-matic, ML 350 4-matic, ML 350 BlueTEC 4-matic, ML 350 CDI 4-matic, ML 420 CDI 4-matic, ML 450 CDI 4-matic, ML 500 4-matic** 07/05 - 140 -285 kW	**44-156251**	**24-166980** XHD *40-148335*	with ADS; with air suspension
B6 Offroad **ML 280 CDI 4-matic, ML 300 CDI 4-matic, ML 320 CDI 4-matic, ML 350 4-matic, ML 350 BlueTEC 4-matic, ML 350 CDI 4-matic, ML 420 CDI 4-matic, ML 450 CDI 4-matic, ML 500 4-matic, ML 63 AMG 4-matic** 07/05 - 140 -375 kW	**24-124362** HD	**24-124379** HD	with standard chassis; with coil-spring suspension
B12 PK **ML 280 CDI 4-matic, ML 320 CDI 4-matic, ML 350 4-matic** 07/05 - 140 -200 kW	**46-193964**		Conditions see certificates; with coil-spring suspension; VA: lowering (expertise): 35 mm; axle load to: 1400 kg; HA: lowering (expertise): 35 mm; axle load to: 1600 kg
MERCEDES-BENZ M-CLASS (166)			
B4 AMC **ML 250 CDI BlueTec 4-matic, ML 350 BlueEfficiency 4-matic, ML 350 BlueTec 4-matic** 06/11 - 150 -225 kW		**40-148342** **27-219935** HD	with ADS; with air suspension

M

MERCEDES-BENZ				
MERCEDES-BENZ R-CLASS (W251, V251)				
B3	**3.0 4-matic, R 280, R 280 CDI, R 320 CDI, R 350, R 500, R 500 4-matic, R 63 AMG** 02/06 - 07/09 140 -375 kW	**36-166640**	**36-202850**	-> CH.Nr.: A 101874; with standard chassis; with coil-spring suspension
B3	**3.0 4-matic, R 280, R 280 CDI, R 300, R 300 CDI, R 300 CDI 4-matic, R 320 CDI, R 350, R 350 4-matic, R 350 CDI 4-matic, R 500, R 500 4-matic, R 63 AMG** 08/09 - 140 -375 kW	**36-166640**	**36-201709**	CH.Nr.: A 101875 ->; with standard chassis; with coil-spring suspension
B3	**3.0 4-matic, R 280, R 280 CDI, R 300, R 300 CDI, R 300 CDI 4-matic, R 320 CDI, R 350, R 350 4-matic, R 350 CDI 4-matic, R 500, R 500 4-matic, R 63 AMG** 02/06 - 140 -375 kW	**36-200818**		with standard chassis; Heavy Duty Version .; with coil-spring suspension
B3	**R 350 CDI 4-matic** 08/10 - 195 kW	**36-166640**	**36-201709**	with standard chassis; with coil-spring suspension
B4	**3.0 4-matic, R 280, R 280 CDI, R 300 CDI, R 300 CDI 4-matic, R 320 CDI, R 350, R 350 4-matic, R 350 CDI 4-matic, R 500, R 500 4-matic, R 63 AMG** 02/06 - 140 -375 kW	**24-166607** HF	**24-144896** HF	Not for United States of America; with standard chassis; with coil-spring suspension
B4	**3.0 4-matic, R 280, R 280 CDI, R 300 CDI, R 300 CDI 4-matic, R 320 CDI, R 350, R 350 4-matic, R 350 CDI 4-matic, R 500, R 500 4-matic, R 63 AMG** 02/06 - 140 -375 kW	**24-166621** HF	**24-144889** HF	Only for United States of America; with standard chassis; with coil-spring suspension
B4 AMC	**3.0 4-matic, R 280, R 280 CDI, R 300 CDI, R 300 CDI 4-matic, R 320 CDI, R 350, R 350 4-matic, R 350 CDI 4-matic, R 500, R 500 4-matic** 01/07 - 140 -285 kW	**44-121167**	**40-148359** **24-167666** X	Not for United States of America; with ADS; with air suspension
B4 AMC	**3.0 4-matic, R 280, R 280 CDI, R 300 CDI, R 300 CDI 4-matic, R 320 CDI, R 350, R 350 4-matic, R 350 CDI 4-matic, R 500, R 500 4-matic** 01/07 - 140 -285 kW	**44-111533**	**24-167659** XHF **40-148359**	Only for United States of America; with ADS; with air suspension
B4 AMC	**R 63 AMG** 02/06 - 375 kW	**44-121167**	**24-121934** **40-148359**	Not for United States of America; with ADS
B4 AMC	**R 63 AMG** 02/06 - 375 kW	**44-111533**	**24-121934** **40-148359**	Only for United States of America; with ADS
MERCEDES-BENZ G-CLASS (W460)				
B3	**230 G, 230 GE, 240 GD, 250 GD, 280 GE, 300 GD** 03/79 - 07/93 53 -115 kW	**36-154210**	**36-129706**	with standard chassis; Long Wheelbase
B4	**230 G, 230 GE, 240 GD, 250 GD, 280 GE, 300 GD** 03/79 - 07/93 53 -115 kW	**24-113366** OH	**24-113373** O	
B6 Offroad	**230 G, 230 GE, 240 GD, 250 GD, 280 GE, 300 GD** 03/79 - 07/93 53 -115 kW	**24-005043** OH	**24-005142** O	
MERCEDES-BENZ G-CLASS (W461)				
B3	**230 GE, 250 GD, 290 GD/G 290 D, G 290 TD, G 320 CDI, G 350 CDI** 04/92 - 68 -135 kW	**36-154210**	**36-129706**	with standard chassis; Long Wheelbase
B4	**230 GE, 250 GD, 290 GD/G 290 D, G 290 TD, G 320 CDI, G 350 CDI** 04/92 - 68 -135 kW	**24-113366** OH	**24-113373** O	

M

MERCEDES-BENZ				
MERCEDES-BENZ G-CLASS (W461)				
B6 Offroad	**230 GE, 250 GD, 290 GD/G 290 D, G 290 TD, G 320 CDI, G 350 CDI** 04/92 - 68 -135 kW	**24-005043** OI	**24-005142** IO	
MERCEDES-BENZ G-CLASS (W463)				
B3	**230 GE, 250 GD, 300 GD, 300 GE, G 270 CDI, G 300 TD, G 350 CDI** 09/89 - 69 -155 kW	**36-154197**	**36-154234**	with standard chassis; Short Wheelbase
B3	**230 GE, 250 GD, 300 GD, 300 GE, G 270 CDI, G 300 TD, G 350 CDI** 09/89 - 69 -155 kW	**36-154197**	**36-129706**	with standard chassis; Long Wheelbase
B3	**230 GE, 250 GD, 300 GD, 300 GE, G 270 CDI, G 300 TD, G 350 CDI** 09/89 - 69 -155 kW	**36-154203**	**36-159413**	with standard chassis; Heavy Duty Version .; Long Wheelbase
B3	**230 GE, 250 GD, 300 GD, 300 GE, G 270 CDI, G 300 TD, G 350 CDI** 09/89 - 69 -155 kW	**36-154203**		with standard chassis; Heavy Duty Version .; Short Wheelbase
B4	**230 GE, 300 GE, G 320** 06/90 - 93 -158 kW	**24-018593** OI	**24-018609** IO	
B4	**250 GD, 300 GD, 350 G Turbo D, 5.4 4x4, G 270 CDI, G 300 TD, G 320 CDI, G 350 CDI, G 36 AMG, G 400 CDI, G 500, G 500 E, G 55 AMG** 09/89 - 69 -373 kW	**24-017275** OI	**24-017282** IO	
B4	**250 GD, 300 GD, 350 G Turbo D, 5.4 4x4, G 270 CDI, G 300 TD, G 320 CDI, G 350 CDI, G 36 AMG, G 400 CDI, G 500, G 500 E, G 55 AMG** 09/89 - 69 -373 kW	**24-017275** OI	**24-017343** IO	mark: Heavy Duty
B6 Offroad	**230 GE, 250 GD, 300 GD, 300 GE, 350 G Turbo D, 5.4 4x4, G 270 CDI, G 300 TD, G 320, G 320 CDI, G 350 CDI, G 36 AMG, G 400 CDI, G 500, G 500 E, G 55 AMG** 09/89 - 69 -373 kW	**24-016353** OI	**24-016360** IO	
MERCEDES-BENZ G-CLASS Cabrio (W463)				
B4	**200 GE, 230 GE, 300 GE, 320 GE, G 320** 09/89 - 80 -158 kW	**24-018593** OI	**24-018609** IO	
B4	**300 GD, 350 G Turbo-D, G 300 TD, G 320 CDI, G 400 CDI, G 500** 12/90 - 83 -285 kW	**24-017275** OI	**24-017282** IO	
B6 Offroad	**200 GE, 230 GE, 300 GD, 300 GE, G 320 CDI** 09/89 - 80 -165 kW	**24-016353** OI	**24-016360** IO	
B6 Offroad	**320 GE, 350 G Turbo-D, G 300 TD, G 320, G 400 CDI, G 500** 09/91 - 100 -285 kW	**24-016353** OI	**24-016360** IO	
MERCEDES-BENZ GL-CLASS (X164)				
B4 AMC	**GL 320 CDI, GL 350 CDI, GL 350 CDI BlueTEC, GL 420 CDI, GL 450, GL 450 CDI, GL 500** 09/06 - 155 -285 kW	**44-165062**	**24-158657** XF **40-148342**	without ADS
B4 AMC	**GL 320 CDI, GL 350 CDI, GL 350 CDI BlueTEC, GL 420 CDI, GL 450, GL 450 CDI, GL 500** 09/06 - 155 -285 kW	**44-156251**	**40-148342** **24-166980** XF	Not for United States of America; with ADS

MERCEDES-BENZ

MERCEDES-BENZ GL-CLASS (X164)

B4 AMC	**GL 320 CDI, GL 350 CDI, GL 350 CDI BlueTEC, GL 420 CDI, GL 450, GL 450 CDI, GL 500** 09/06 - 155 -285 kW	**44-156268**	**24-166997** XT **40-148342**	Only for United States of America; with ADS

MERCEDES-BENZ GLK-CLASS (X204)

B1	**200 CDI, 220 CDI, 220 CDI 4-matic, 250 CDI 4-matic, 280 4-matic, 300 4-matic, 320 CDI 4-matic, 350, 350 4-matic, 350 CDI 4-matic** 02/10 - 105 -225 kW	**12-225835**		VA: with ball bearing; without electronic suspension control; without sport chassis
B1	**200 CDI, 220 CDI, 220 CDI 4-matic, 250 CDI 4-matic, 280 4-matic, 300 4-matic, 320 CDI 4-matic, 350, 350 4-matic, 350 CDI 4-matic** 02/10 - 105 -225 kW	**12-225842**		VA: with ball bearing; with electronic suspension control; with sports suspension
B4	**200 CDI, 220 CDI, 220 CDI 4-matic, 250 CDI 4-matic, 280 4-matic, 300 4-matic, 320 CDI 4-matic, 350, 350 4-matic, 350 CDI 4-matic** 02/10 - 105 -225 kW	**i.V.**	**24-196918** OIO	with standard chassis
B6 Sport	**200 CDI, 220 CDI, 220 CDI 4-matic, 250 CDI 4-matic, 280 4-matic, 300 4-matic, 320 CDI 4-matic, 350, 350 4-matic, 350 CDI 4-matic** 02/10 - 105 -225 kW	**35-164418**	**24-164429** OIO	

MERCEDES-BENZ V-CLASS (638/2)

B1	**V 200, V 200 CDI, V 220 CDI, V 230, V 230 TD, V 280** 09/96 - 07/03 72 -128 kW	**12-224289**		VA: without ball bearing
B4	**V 200, V 200 CDI, V 220 CDI, V 230, V 230 TD, V 280** 09/96 - 07/03 72 -128 kW	**22-128300** **11-101376** SP	**24-145404** OIO	

MERCEDES-BENZ VIANO (W639)

B3	**2.2 Cdi, 3.0 CDI, 3.2, 3.5 126, 3.7, CDI 2.0, CDI 2.0 4-matic, CDI 2.2, CDI 2.2 4-matic, CDI 3.0** 07/05 - 80 -190 kW		**36-196814**	with standard chassis
B4	**2.2 Cdi, 3.0 CDI, 3.2, 3.5 126, 3.7, CDI 2.0, CDI 2.2, CDI 3.0** 09/03 - 08/10 80 -190 kW	**22-168771**	**24-172981** OIO	-> CH.Nr.: 3603471; with standard chassis HA: without pneumatic suspension
B4	**2.2 Cdi, 3.0 CDI, 3.2, 3.5 126, 3.7, CDI 2.0, CDI 2.2, CDI 3.0** 09/03 - 08/10 80 -190 kW	**22-168771**	**24-169608** OIO	-> CH.Nr.: 3603471; with standard chassis HA: with air suspension
B4	**2.2 Cdi, 3.0 CDI, 3.2, 3.5 126, 3.7, CDI 2.0, CDI 2.2, CDI 3.0** 09/10 - 80 -190 kW	**i.V.**	**24-172981** OIO	CH.Nr.: 3603472 ->; with standard chassis HA: without pneumatic suspension
B4	**2.2 Cdi, 3.0 CDI, 3.2, 3.5 126, 3.7, CDI 2.0, CDI 2.2, CDI 3.0** 09/10 - 80 -190 kW	**i.V.**	**24-169608** OIO	CH.Nr.: 3603472 ->; with standard chassis HA: with air suspension

MERCEDES-BENZ VITO Bus (638)

B1	**108 CDI 2.2, 108 D 2.3, 110 CDI 2.2, 110 TD 2.3, 112 CDI 2.2, 113 2.0, 114 2.3** 12/96 - 07/03 58 -105 kW	**12-224289**		VA: without ball bearing

M

MERCEDES-BENZ				
MERCEDES-BENZ VITO Bus (638)				
B3	**108 CDI 2.2, 108 D 2.3, 110 CDI 2.2, 110 TD 2.3, 112 CDI 2.2, 113 2.0, 114 2.3** 12/96 - 07/03 58 -105 kW	**36-201617**	**38-154089**	with standard chassis
B4	**108 CDI 2.2, 108 D 2.3, 110 CDI 2.2, 110 TD 2.3, 112 CDI 2.2, 113 2.0, 114 2.3** 12/96 - 07/03 58 -105 kW	**22-128300** **11-101376** SP	**24-145404** OIO	
MERCEDES-BENZ VITO Box (638)				
B1	**108 CDI 2.2, 108 D 2.3, 110 CDI 2.2, 110 D 2.3, 112 CDI 2.2, 113 2.0, 114 2.3** 03/97 - 07/03 58 -105 kW	**12-224289**		VA: without ball bearing
B3	**108 CDI 2.2, 108 D 2.3, 110 CDI 2.2, 110 D 2.3, 112 CDI 2.2, 113 2.0, 114 2.3** 03/97 - 07/03 58 -105 kW	**36-201617**	**38-154089**	with standard chassis
B4	**108 CDI 2.2, 108 D 2.3, 110 CDI 2.2, 110 D 2.3, 112 CDI 2.2, 113 2.0, 114 2.3** 03/97 - 07/03 58 -105 kW	**22-128300** **11-101376** SP	**24-145404** OIO	
MERCEDES-BENZ VITO Bus (W639)				
B3	**109 CDI 2.2, 110 CDI, 111 CDI 2.2, 113 CDI, 115 CDI 2.2, 116 CDI, 119, 120 CDI, 122, 122 CDI, 123, 126** 09/03 - 65 -190 kW		**36-196814**	with standard chassis
B4	**109 CDI 2.2, 111 CDI 2.2, 115 CDI 2.2, 119, 120 CDI, 122, 123, 126** 09/03 - 08/10 65 -190 kW	**22-168771**	**24-172981** OIO	-> CH.Nr.: 3603471; with standard chassis HA: without pneumatic suspension
B4	**109 CDI 2.2, 111 CDI 2.2, 115 CDI 2.2, 119, 120 CDI, 122, 123, 126** 09/03 - 08/10 65 -190 kW	**22-168771**	**24-169608** OIO	-> CH.Nr.: 3603471; with standard chassis HA: with air suspension
B4	**109 CDI 2.2, 110 CDI, 111 CDI 2.2, 113 CDI, 115 CDI 2.2, 116 CDI, 119, 120 CDI, 122, 122 CDI, 123, 126** 09/10 - 65 -190 kW	i.V.	**24-172981** OIO	CH.Nr.: 3603472 ->; with standard chassis HA: without pneumatic suspension
B4	**109 CDI 2.2, 110 CDI, 111 CDI 2.2, 113 CDI, 115 CDI 2.2, 116 CDI, 119, 120 CDI, 122, 122 CDI, 123, 126** 09/10 - 65 -190 kW	i.V.	**24-169608** OIO	CH.Nr.: 3603472 ->; with standard chassis HA: with air suspension
MERCEDES-BENZ VITO Box (W639)				
B3	**109 CDi, 109 CDI 2.2, 110 CDI, 111 CDI 2.2, 111 CDI 2.2 4x4, 113 CDI, 115 CDI 2.2, 115 CDI 2.2 4x4, 116 CDI, 120 CDI, 122 CDI, 123, 126** 06/04 - 65 -190 kW		**36-196814**	with standard chassis
B4	**109 CDi, 109 CDI 2.2, 111 CDI 2.2, 115 CDI 2.2, 119 3.2, 120 CDI, 122 3.2, 123, 126** 06/04 - 08/10 65 -190 kW	**22-168771**	**24-172981** OIO	-> CH.Nr.: 3603471; with standard chassis HA: without pneumatic suspension
B4	**109 CDi, 109 CDI 2.2, 111 CDI 2.2, 115 CDI 2.2, 119 3.2, 120 CDI, 122 3.2, 123, 126** 06/04 - 08/10 65 -190 kW	**22-168771**	**24-169608** OIO	-> CH.Nr.: 3603471; with standard chassis HA: with air suspension
B4	**109 CDi, 109 CDI 2.2, 110 CDI, 111 CDI 2.2, 113 CDI, 115 CDI 2.2, 116 CDI, 119 3.2, 120 CDI, 122 3.2, 122 CDI, 126** 09/10 - 65 -190 kW	i.V.	**24-172981** OIO	CH.Nr.: 3603472 ->; with standard chassis HA: without pneumatic suspension

M

MERCEDES-BENZ

MERCEDES-BENZ VITO Box (W639)

B4	**109 CDi, 109 CDI 2.2, 110 CDI, 111 CDI 2.2, 113 CDI, 115 CDI 2.2, 116 CDI, 119 3.2, 120 CDI, 122 3.2, 122 CDI, 126** 09/10 - 65 -190 kW	i.V.	**24-169608**	CH.Nr.: 3603472 ->; with standard chassis HA: with air suspension

MERCEDES-BENZ SPRINTER 2-t Bus (901, 902)

B1	**208 CDI, 208 D, 210 D, 211 CDI, 212 D, 213 CDI, 214, 214 NGT, 216 CDI** 02/95 - 05/06 58 -115 kW	**12-224104**		VA: with ball bearing
B3	**208 CDI, 208 D, 210 D, 211 CDI, 212 D, 213 CDI, 214, 216 CDI** 02/95 - 05/06 58 -115 kW	**39-207999**	**39-208002**	with standard chassis; To Payload 2500 kg
B3	**208 CDI, 208 D, 210 D, 211 CDI, 212 D, 213 CDI, 214, 216 CDI** 02/95 - 05/06 58 -115 kW	**39-208088**	**39-208071**	with standard chassis; To Payload 2800 kg
B3	**208 CDI, 208 D, 210 D, 211 CDI, 212 D, 213 CDI, 214, 216 CDI** 02/95 - 05/06 58 -115 kW	**39-208088**	**39-203359**	with standard chassis; To Payload 2950 kg
B4	**208 CDI, 208 D, 210 D, 211 CDI, 212 D, 213 CDI, 214, 214 NGT, 216 CDI** 02/95 - 05/06 58 -115 kW	**22-214751**	**19-064529**	with standard chassis
B4	**208 CDI, 208 D, 210 D, 211 CDI, 212 D, 213 CDI, 214, 214 NGT, 216 CDI** 02/95 - 05/06 58 -115 kW	**22-214751**	**19-100180**	with off-road suspension

MERCEDES-BENZ SPRINTER 2-t Box (901, 902)

B1	**208 CDI, 208 D, 210 D, 211 CDI, 212 D, 213 CDI, 214, 214 NGT, 216 CDI** 02/95 - 05/06 58 -115 kW	**12-224104**		VA: with ball bearing
B3	**208 CDI, 208 D, 210 D, 211 CDI, 212 D, 213 CDI, 214, 216 CDI** 02/95 - 05/06 58 -115 kW	**39-207999**	**39-208002**	with standard chassis; To Payload 2500 kg
B3	**208 CDI, 208 D, 210 D, 211 CDI, 212 D, 213 CDI, 214, 216 CDI** 02/95 - 05/06 58 -115 kW	**39-208088**	**39-208071**	with standard chassis; To Payload 2800 kg
B3	**208 CDI, 208 D, 210 D, 211 CDI, 212 D, 214, 216 CDI** 02/95 - 05/06 58 -115 kW	**39-208088**	**39-203359**	with standard chassis; To Payload 2950 kg
B4	**208 CDI, 208 D, 210 D, 211 CDI, 212 D, 213 CDI, 214, 214 NGT, 216 CDI** 02/95 - 05/06 58 -115 kW	**22-214751**	**19-064529**	with standard chassis
B4	**208 CDI, 208 D, 210 D, 211 CDI, 212 D, 213 CDI, 214, 214 NGT, 216 CDI** 02/95 - 05/06 58 -115 kW	**22-214751**	**19-100180**	with off-road suspension

MERCEDES-BENZ SPRINTER 2-t Flatbed / Chassis (901, 902)

B1	**208 CDI, 208 D, 210 D, 211 CDI, 212 D, 213 CDI, 214, 214 NGT, 216 CDI** 02/95 - 05/06 58 -115 kW	**12-224104**		VA: with ball bearing
B3	**208 CDI, 208 D, 210 D, 211 CDI, 212 D, 213 CDI, 214, 216 CDI** 02/95 - 05/06 58 -115 kW	**39-207999**	**39-208002**	with standard chassis; To Payload 2500 kg
B3	**208 CDI, 208 D, 210 D, 211 CDI, 212 D, 213 CDI, 214, 216 CDI** 02/95 - 05/06 58 -115 kW	**39-208088**	**39-208071**	with standard chassis; To Payload 2800 kg

M

MERCEDES-BENZ				
MERCEDES-BENZ SPRINTER 2-t Flatbed / Chassis (901, 902)				
B3	**208 CDI, 208 D, 210 D, 211 CDI, 212 D, 213 CDI, 214, 216 CDI** 02/95 - 05/06 58 -115 kW	**39-208088**	**39-203359**	with standard chassis; To Payload 2950 kg
B4	**208 CDI, 208 D, 210 D, 211 CDI, 212 D, 213 CDI, 214, 214 NGT, 216 CDI** 02/95 - 05/06 58 -115 kW	**22-214751**	**19-064529** OIO	with standard chassis
B4	**208 CDI, 208 D, 210 D, 211 CDI, 212 D, 213 CDI, 214, 214 NGT, 216 CDI** 02/95 - 05/06 58 -115 kW	**22-214751**	**19-100180** OIO	with off-road suspension
MERCEDES-BENZ SPRINTER 3-t Bus (903)				
B1	**308 CDI, 308 D, 310 D 4x4, 311 CDI, 311 CDI 4x4, 312 D 2.9, 312 D 2.9 4x4, 313 CDI, 313 CDI 4x4, 314, 314 4x4, 314 NGT, 316 CDI, 316 CDI 4x4** 02/95 - 05/06 58 -115 kW	**12-224104**		VA: with ball bearing
B3	**2.3 D 4x4, 310 D 4x4, 311 CDI 4x4, 312 D 2.9 4x4, 313 CDI 4x4, 314 4x4, 316 CDI 4x4** 05/97 - 05/06 58 -115 kW	**39-208040**		with standard chassis; To Payload 3500 kg
B3	**2.9 TDi, 308 CDI, 308 D, 308 E, 311 CDI, 312 D 2.9, 313 CDI, 314, 316 CDI** 02/95 - 05/06 40 -115 kW	**39-208064**	**39-208279**	with standard chassis; To Payload 3500 kg
B3	**2.9 TDi, 308 CDI, 308 D, 308 E, 311 CDI, 312 D 2.9, 313 CDI, 314, 316 CDI** 02/95 - 05/06 40 -115 kW	**39-208040**	**39-208286**	with standard chassis; Heavy Duty Version .; To Payload 3500 kg
B3	**2.9 TDi, 308 CDI, 308 D, 308 E, 311 CDI, 312 D 2.9, 313 CDI, 314, 316 CDI, 308 CDI, 308 D 2.3, 310 D 2.9, 311 CDI, 312 D 2.9, 313 CDI, 314, 316 CDI, 308 CDI, 308 D 2.3, 310 D 2.9, 311 CDI, 312 D 2.9, 313 CDI, 314, 316 CDI** 02/95 - 05/06 40 -115 kW	**39-208033**		with standard chassis; mark: Heavy Duty VA: Parabolic Spring
B3	**2.9 TDi, 308 CDI, 308 D, 308 E, 311 CDI, 312 D 2.9, 313 CDI, 314, 316 CDI** 02/95 - 05/06 40 -115 kW		**39-208231**	with standard chassis; with off-road suspension; To Payload 3500 kg
B3	**2.9 TDi, 308 CDI, 308 D, 308 E, 311 CDI, 312 D 2.9, 313 CDI, 314, 316 CDI** 02/95 - 05/06 40 -115 kW		**39-203359**	with standard chassis; For reduced payload; To Payload 3200 kg
B3	**2.9 TDi, 308 CDI, 308 D, 308 E, 311 CDI, 312 D 2.9, 313 CDI, 314, 316 CDI** 02/95 - 05/06 40 -115 kW		**39-208293**	with standard chassis; To Payload 3500 kg; mark: zweistufig
B3	**2.9 TDi, 308 CDI, 308 D, 308 E, 311 CDI, 312 D 2.9, 313 CDI, 314, 316 CDI** 02/95 - CH-Nr. 40 -115 kW		**39-208149**	-> CH.Nr.: R 02.11.2000; with standard chassis; To Payload 3500 kg; mark: herabg. Bauhöhe
B3	**2.9 TDi, 308 CDI, 308 D, 308 E, 311 CDI, 312 D 2.9, 313 CDI, 314, 316 CDI** CH-Nr. - 05/06 40 -115 kW		**39-208316**	CH.Nr.: R 02.11.2000 ->; with standard chassis; To Payload 3500 kg; mark: herabg. Bauhöhe
B4	**308 CDI, 308 D, 308 E, 311 CDI, 312 D 2.9, 313 CDI, 314, 314 NGT, 316 CDI** 02/95 - 05/06 40 -115 kW	**22-214751**	**19-064529** OIO	with standard chassis
B4	**308 CDI, 308 D, 308 E, 311 CDI, 312 D 2.9, 313 CDI, 314, 314 NGT, 316 CDI** 02/95 - 05/06 40 -115 kW	**22-214751**	**19-100180** OIO	with off-road suspension

M

MERCEDES-BENZ

MERCEDES-BENZ SPRINTER 3-t Box (903)

B1	**308 CDI, 308 D 2.3, 310 D 2.9, 311 CDI, 311 CDI 4x4, 312 D 2.9, 312 D 2.9 4x4, 313 CDI, 313 CDI 4x4, 314, 314 4x4, 314 NGT, 316 CDI, 316 CDI 4x4** 02/95 - 05/06 58 -115 kW	**12-224104**		VA: with ball bearing
B3	**308 CDI, 308 D 2.3, 310 D 2.9, 311 CDI, 312 D 2.9, 313 CDI, 314, 316 CDI** 02/95 - 05/06 58 -115 kW	**39-208064**	**39-208279**	with standard chassis; To Payload 3500 kg
B3	**308 CDI, 308 D 2.3, 310 D 2.9, 311 CDI, 312 D 2.9, 313 CDI, 314, 316 CDI** 02/95 - 05/06 58 -115 kW	**39-208040**	**39-208286**	with standard chassis; Heavy Duty Version .; To Payload 3500 kg
B3	**308 CDI, 308 D 2.3, 310 D 2.9, 311 CDI, 312 D 2.9, 313 CDI, 314, 316 CDI** 02/95 - 05/06 58 -115 kW		**39-208231**	with standard chassis; with off-road suspension; To Payload 3500 kg
B3	**308 CDI, 308 D 2.3, 310 D 2.9, 311 CDI, 312 D 2.9, 313 CDI, 314, 316 CDI** 02/95 - 05/06 58 -115 kW		**39-203359**	with standard chassis; For reduced payload; To Payload 3200 kg
B3	**308 CDI, 308 D 2.3, 310 D 2.9, 311 CDI, 312 D 2.9, 313 CDI, 314, 316 CDI** 02/95 - 05/06 58 -115 kW		**39-208293**	with standard chassis; To Payload 3500 kg; mark: zweistufig
B3	**308 CDI, 308 D 2.3, 310 D 2.9, 311 CDI, 312 D 2.9, 313 CDI, 314, 316 CDI** 02/95 - CH-Nr. 58 -115 kW		**39-208149**	-> CH.Nr.: R 02.11.2000; with standard chassis; To Payload 3500 kg; mark: herabg. Bauhöhe
B3	**308 CDI, 308 D 2.3, 310 D 2.9, 311 CDI, 312 D 2.9, 313 CDI, 314, 316 CDI** CH-Nr. - 05/06 58 -115 kW		**39-208316**	CH.Nr.: R 02.11.2000 ->; with standard chassis; To Payload 3500 kg; mark: herabg. Bauhöhe
B3	**2.3 D 4x4, 311 CDI 4x4, 312 D 2.9 4x4, 313 CDI 4x4, 314 4x4, 316 CDI 4x4** 05/97 - 05/06 58 -115 kW	**39-208040**		with standard chassis; To Payload 3500 kg
B4	**308 CDI, 308 D 2.3, 310 D 2.9, 311 CDI, 312 D 2.9, 313 CDI, 314, 314 NGT, 316 CDI** 02/95 - 05/06 58 -115 kW	**22-214751**	**19-064529** OIO	with standard chassis
B4	**308 CDI, 308 D 2.3, 310 D 2.9, 311 CDI, 312 D 2.9, 313 CDI, 314, 314 NGT, 316 CDI** 02/95 - 05/06 58 -115 kW	**22-214751**	**19-100180** OIO	with off-road suspension

MERCEDES-BENZ SPRINTER 3-t Flatbed / Chassis (903)

B1	**308 CDI, 308 D 2.3, 310 D 2.9, 311 CDI, 311 CDI 4x4, 312 D 2.9, 313 CDI, 313 CDI 4x4, 314, 314 4x4, 314 NGT, 316 CDI, 316 CDI 4x4** 02/95 - 05/06 58 -115 kW	**12-224104**		VA: with ball bearing
B3	**308 CDI, 308 D 2.3, 310 D 2.9, 311 CDI, 312 D 2.9, 313 CDI, 314, 316 CDI** 02/95 - 05/06 58 -115 kW	**39-208064**	**39-208279**	with standard chassis; To Payload 3500 kg
B3	**308 CDI, 308 D 2.3, 310 D 2.9, 311 CDI, 312 D 2.9, 313 CDI, 314, 316 CDI** 02/95 - 05/06 58 -115 kW	**39-208040**	**39-208286**	with standard chassis; Heavy Duty Version .; To Payload 3500 kg
B3	**308 CDI, 308 D 2.3, 310 D 2.9, 311 CDI, 312 D 2.9, 313 CDI, 314, 316 CDI** 02/95 - 05/06 58 -115 kW		**39-208231**	with standard chassis; with off-road suspension; To Payload 3500 kg
B3	**308 CDI, 308 D 2.3, 310 D 2.9, 311 CDI, 312 D 2.9, 313 CDI, 314, 316 CDI** 02/95 - 05/06 58 -115 kW		**39-203359**	with standard chassis; For reduced payload; To Payload 3200 kg
B3	**308 CDI, 308 D 2.3, 310 D 2.9, 311 CDI, 312 D 2.9, 313 CDI, 314, 316 CDI** 02/95 - 05/06 58 -115 kW		**39-208293**	with standard chassis; To Payload 3500 kg; mark: zweistufig

M

MERCEDES-BENZ				
MERCEDES-BENZ SPRINTER 3-t Flatbed / Chassis (903)				
B3	**308 CDI, 308 D 2.3, 310 D 2.9, 311 CDI, 312 D 2.9, 313 CDI, 314, 316 CDI** 02/95 - CH-Nr. 58 -115 kW		**39-208149**	-> CH.Nr.: R 02.11.2000; with standard chassis; To Payload 3500 kg; mark: herabg. Bauhöhe
B3	**308 CDI, 308 D 2.3, 310 D 2.9, 311 CDI, 312 D 2.9, 313 CDI, 314, 316 CDI** CH-Nr. - 05/06 58 -115 kW		**39-208316**	CH.Nr.: R 02.11.2000 ->; with standard chassis; To Payload 3500 kg; mark: herabg. Bauhöhe
B3	**311 CDI 4x4, 313 CDI 4x4, 314 4x4, 316 CDI 4x4** 08/02 - 05/06 80 -115 kW	**39-208040**		with standard chassis; To Payload 3500 kg
B4	**308 CDI, 308 D 2.3, 310 D 2.9, 311 CDI, 312 D 2.9, 313 CDI, 314, 314 NGT, 316 CDI** 02/95 - 05/06 58 -115 kW	**22-214751**	**19-064529**	
B4	**308 CDI, 308 D 2.3, 310 D 2.9, 311 CDI, 312 D 2.9, 313 CDI, 314, 314 NGT, 316 CDI** 02/95 - 05/06 58 -115 kW	**22-214751**	**19-100180**	with off-road suspension
MERCEDES-BENZ SPRINTER 4-t Bus (904)				
B1	**408 CDI, 411 CDI, 413 CDI, 414, 416 CDI** 02/96 - 05/06 60 -115 kW	**12-224104**		VA: with ball bearing
B3	**408 CDI, 411 CDI, 413 CDI, 414, 416 CDI** 02/96 - 05/06 60 -115 kW		**39-208248**	with standard chassis; To Payload 4600 kg
B3	**408 CDI, 411 CDI, 413 CDI, 414, 416 CDI** 02/96 - 05/06 60 -115 kW		**39-208224**	with standard chassis; Heavy Duty Version .; To Payload 4600 kg
B3	**408 CDI, 411 CDI, 413 CDI, 414, 416 CDI** 02/96 - CH-Nr. 60 -115 kW		**39-208194**	-> CH.Nr.: P 721252; with standard chassis; For reduced payload; To Payload 3500 kg
B3	**408 CDI, 411 CDI, 413 CDI, 414, 416 CDI** CH-Nr. - 05/06 60 -115 kW		**39-208255**	CH.Nr.: P 721253 ->; with standard chassis; For reduced payload; To Payload 3500 kg
B3	**408 CDI, 411 CDI, 413 CDI, 414, 416 CDI** 02/96 - 05/06 60 -115 kW		*39-208187*	with standard chassis; To Payload 4600 kg; mark: herabg. Bauhöhe
B3	**408 CDI, 411 CDI, 413 CDI, 414, 416 CDI** 02/96 - 05/06 60 -115 kW		**39-208217**	with standard chassis; Heavy Duty Version .; To Payload 4600 kg; For motor home; For fire brigade vehicles
B3	**408 CDI, 411 CDI, 413 CDI, 414, 416 CDI** 02/96 - 05/06 60 -115 kW		**39-208200**	with standard chassis; To Payload 4600 kg; For ambulances
B4	**408 CDI, 411 CDI, 413 CDI, 414, 416 CDI** 02/96 - 05/06 60 -115 kW	**22-214768**	**19-167985**	
MERCEDES-BENZ SPRINTER 4-t Box (904)				
B1	**408 CDI, 408 D, 410 D, 410 D 4x4, 411 CDI, 411 CDI 4x4, 412 D, 412 D 4x4, 413 CDI, 413 CDI 4x4, 414, 414 4x4, 416 CDI, 416 CDI 4x4** 05/97 - 05/06 58 -115 kW	**12-224104**		VA: with ball bearing
B3	**408 CDI, 408 D, 410 D, 411 CDI, 412 D, 413 CDI, 414, 416 CDI** 02/96 - 05/06 58 -115 kW		**39-208248**	with standard chassis; To Payload 4600 kg
B3	**408 CDI, 408 D, 410 D, 411 CDI, 412 D, 413 CDI, 414, 416 CDI** 02/96 - 05/06 58 -115 kW		**39-208224**	with standard chassis; Heavy Duty Version .; To Payload 4600 kg
B3	**408 CDI, 408 D, 410 D, 411 CDI, 412 D, 413 CDI, 414, 416 CDI** 02/96 - CH-Nr. 58 -115 kW		**39-208194**	-> CH.Nr.: P 721252; with standard chassis; For reduced payload; To Payload 3500 kg

M

MERCEDES-BENZ

MERCEDES-BENZ SPRINTER 4-t Box (904)

B3	**408 CDI, 408 D, 410 D, 411 CDI, 412 D, 413 CDI, 414, 416 CDI** CH-Nr. - 05/06 58 -115 kW		**39-208255**	CH.Nr.: P 721253 ->; with standard chassis; For reduced payload; To Payload 3500 kg
B3	**408 CDI, 408 D, 410 D, 411 CDI, 412 D, 413 CDI, 414, 416 CDI** 02/96 - 05/06 58 -115 kW		*39-208187*	with standard chassis; To Payload 4600 kg; mark: herabg. Bauhöhe
B3	**408 CDI, 408 D, 410 D, 411 CDI, 412 D, 413 CDI, 414, 416 CDI** 02/96 - 05/06 58 -115 kW		**39-208217**	with standard chassis; Heavy Duty Version .; To Payload 4600 kg; For motor home; For fire brigade vehicles
B3	**408 CDI, 408 D, 410 D, 411 CDI, 412 D, 413 CDI, 414, 416 CDI** 02/96 - 05/06 58 -115 kW		**39-208200**	with standard chassis; To Payload 4600 kg; For ambulances
B3	**2.3 D 4x4, 410 D 4x4, 411 CDI 4x4, 412 D 4x4, 413 CDI 4x4, 414 4x4, 416 CDI 4x4** 05/97 - 05/06 58 -115 kW	**39-208040**		with standard chassis; To Payload 4600 kg
B4	**408 CDI, 408 D, 410 D, 411 CDI, 412 D, 413 CDI, 414, 416 CDI** 02/96 - 05/06 58 -115 kW	**22-214768**	**19-167985** OIO	

MERCEDES-BENZ SPRINTER 4-t Flatbed / Chassis (904)

B1	**408 CDI, 408 D, 410 D, 410 D 4x4, 411 CDI, 411 CDI 4x4, 412 D, 412 D 4x4, 413 CDI, 413 CDI 4x4, 414, 414 4x4, 416 CDI, 416 CDI 4x4** 05/97 - 05/06 58 -115 kW	**12-224104**		VA: with ball bearing
B3	**408 CDI, 408 D, 410 D, 411 CDI, 412 D, 413 CDI, 414, 416 CDI** 02/96 - 05/06 58 -115 kW		**39-208248**	with standard chassis; To Payload 4600 kg
B3	**408 CDI, 408 D, 410 D, 411 CDI, 412 D, 413 CDI, 414, 416 CDI** 02/96 - 05/06 58 -115 kW		**39-208224**	with standard chassis; Heavy Duty Version .; To Payload 4600 kg
B3	**408 CDI, 408 D, 410 D, 411 CDI, 412 D, 413 CDI, 414, 416 CDI** 02/96 - CH-Nr. 58 -115 kW		**39-208194**	-> CH.Nr.: P 721252; with standard chassis; For reduced payload; To Payload 3500 kg
B3	**408 CDI, 408 D, 410 D, 411 CDI, 412 D, 413 CDI, 414, 416 CDI** CH-Nr. - 05/06 58 -115 kW		**39-208255**	CH.Nr.: P 721253 ->; with standard chassis; For reduced payload; To Payload 3500 kg
B3	**408 CDI, 408 D, 410 D, 411 CDI, 412 D, 413 CDI, 414, 416 CDI** 02/96 - 05/06 58 -115 kW		*39-208187*	with standard chassis; To Payload 4600 kg; mark: herabg. Bauhöhe
B3	**408 CDI, 408 D, 410 D, 411 CDI, 412 D, 413 CDI, 414, 416 CDI** 02/96 - 05/06 58 -115 kW		**39-208217**	with standard chassis; Heavy Duty Version .; To Payload 4600 kg; For motor home; For fire brigade vehicles
B3	**408 CDI, 408 D, 410 D, 411 CDI, 412 D, 413 CDI, 414, 416 CDI** 02/96 - 05/06 58 -115 kW		**39-208200**	with standard chassis; To Payload 4600 kg; For ambulances
B3	**2.3 D 4x4, 410 D 4x4, 411 CDI 4x4, 412 D 4x4, 413 CDI 4x4, 414 4x4, 416 CDI 4x4** 05/97 - 05/06 58 -115 kW	**39-208040**		with standard chassis; To Payload 4600 kg
B4	**408 CDI, 408 D, 410 D, 411 CDI, 412 D, 413 CDI, 414, 416 CDI** 02/96 - 05/06 58 -115 kW	**22-214768**	**19-167985** OIO	

MERCEDES-BENZ SPRINTER 3-t Bus (906)

B1	**210 CDI, 211 CDI, 215 CDI, 216, 224** 06/06 - 70 -190 kW	**12-224265**		VA: without ball bearing

MERCEDES-BENZ				
MERCEDES-BENZ SPRINTER 3-t Bus (906)				
B3	**210 CDI, 211 CDI, 215 CDI, 224** 06/06 - 70 -190 kW		**39-208392**	with standard chassis; mark: 2-Stufig mit Tilger
B3	**210 CDI, 211 CDI, 215 CDI, 224** 06/06 - 70 -190 kW		**39-208347**	with standard chassis; with air suspension
B3	**210 CDI, 211 CDI, 215 CDI, 224** 06/06 - 70 -190 kW		**39-208408**	with off-road suspension
B4	**210 CDI, 211 CDI, 215 CDI, 216, 224** 06/06 - 70 -190 kW	**22-184238**	**19-171579** OIO	with standard chassis
B4	**210 CDI, 211 CDI, 215 CDI, 216, 224** 06/06 - 70 -190 kW	**22-184245**	**19-169279** OIO	Heavy Duty Version .
MERCEDES-BENZ SPRINTER 3-t Box (906)				
B1	**209 CDI, 210 CDI, 211 CDI, 213 CDI, 215 CDI, 216, 216 CDI, 218 CDI, 219 CDI, 224** 06/06 - 65 -190 kW	**12-224265**		VA: without ball bearing
B3	**209 CDI, 210 CDI, 211 CDI, 213 CDI, 215 CDI, 216 CDI, 218 CDI, 224** 06/06 - 65 -190 kW		**39-208392**	with standard chassis; mark: 2-Stufig mit Tilger
B3	**209 CDI, 210 CDI, 211 CDI, 213 CDI, 215 CDI, 216 CDI, 218 CDI, 224** 06/06 - 65 -190 kW		**39-208347**	with standard chassis; with air suspension
B3	**209 CDI, 210 CDI, 211 CDI, 213 CDI, 215 CDI, 216 CDI, 218 CDI, 224** 06/06 - 65 -190 kW		**39-208408**	with off-road suspension
B4	**209 CDI, 210 CDI, 211 CDI, 213 CDI, 215 CDI, 216, 216 CDI, 218 CDI, 219 CDI, 224** 06/06 - 65 -190 kW	**22-184238**	**19-171579** OIO	with standard chassis
B4	**209 CDI, 210 CDI, 211 CDI, 213 CDI, 215 CDI, 216, 216 CDI, 218 CDI, 219 CDI, 224** 06/06 - 65 -190 kW	**22-184245**	**19-169279** OIO	Heavy Duty Version .
MERCEDES-BENZ SPRINTER 3-t Flatbed / Chassis (906)				
B1	**209 CDI, 210 CDI, 211 CDI, 213 CDI, 215 CDI, 216, 216 CDI, 218 CDI, 219 CDI, 224** 06/06 - 65 -190 kW	**12-224265**		VA: without ball bearing
B3	**209 CDI, 211 CDI, 213 CDI, 215 CDI, 218 CDI, 224** 06/06 - 65 -190 kW		**39-208392**	with standard chassis; mark: 2-Stufig mit Tilger
B3	**209 CDI, 211 CDI, 213 CDI, 215 CDI, 218 CDI, 224** 06/06 - 65 -190 kW		**39-208347**	with standard chassis; with air suspension
B3	**209 CDI, 211 CDI, 213 CDI, 215 CDI, 218 CDI, 224** 06/06 - 65 -190 kW		**39-208408**	with off-road suspension
B4	**209 CDI, 210 CDI, 211 CDI, 213 CDI, 215 CDI, 216, 216 CDI, 218 CDI, 219 CDI, 224** 06/06 - 65 -190 kW	**22-184238**	**19-171579** OIO	with standard chassis
B4	**209 CDI, 210 CDI, 211 CDI, 213 CDI, 215 CDI, 216, 216 CDI, 218 CDI, 219 CDI, 224** 06/06 - 65 -190 kW	**22-184245**	**19-169279** OIO	Heavy Duty Version .

MERCEDES-BENZ

MERCEDES-BENZ SPRINTER 3-t Flatbed / Chassis (906)

MERCEDES-BENZ SPRINTER 3,5-t Bus (906)

B1	**310 CDI, 311 CDI, 313 CDI, 315 CDI, 316, 318 CDI, 319 CDI, 324** 06/06 - 70 -190 kW	**12-224265**		VA: without ball bearing
B3	**310 CDI, 311 CDI, 315 CDI, 324** 06/06 - 70 -190 kW		**39-208385**	with standard chassis; max. load: 3880 kg
B3	**310 CDI, 311 CDI, 315 CDI, 324** 06/06 - 70 -190 kW		**39-208361**	with standard chassis; Heavy Duty Version .
B3	**310 CDI, 311 CDI, 315 CDI, 324** 06/06 - 70 -190 kW		**39-208392**	with standard chassis; mark: 2 Stufig mit Tilger
B3	**310 CDI, 311 CDI, 315 CDI, 324** 06/06 - 70 -190 kW		**39-208347**	with standard chassis; with air suspension
B3	**310 CDI, 311 CDI, 315 CDI, 324** 06/06 - 70 -190 kW		**39-208408**	with off-road suspension
B4	**310 CDI, 311 CDI, 315 CDI, 316, 318 CDI, 319 CDI, 324** 06/06 - 70 -190 kW	**22-184238**	**19-171579** OIO	with standard chassis
B4	**310 CDI, 311 CDI, 315 CDI, 316, 318 CDI, 319 CDI, 324** 06/06 - 70 -190 kW	**22-184245**	**19-169279** OIO	Heavy Duty Version .

MERCEDES-BENZ SPRINTER 3,5-t Box (906)

B1	**309 CDI, 310 CDI, 311 CDI, 313 CDI, 315 CDI, 316, 316 CDI, 318 CDI, 319 CDI, 324** 06/06 - 65 -190 kW	**12-224265**		VA: without ball bearing
B3	**309 CDI, 310 CDI, 311 CDI, 313 CDI, 315 CDI, 318 CDI, 324** 06/06 - 65 -190 kW		**39-208385**	with standard chassis; max. load: 3880 kg
B3	**309 CDI, 310 CDI, 311 CDI, 313 CDI, 315 CDI, 318 CDI, 324** 06/06 - 65 -190 kW		**39-208361**	with standard chassis; Heavy Duty Version .
B3	**309 CDI, 310 CDI, 311 CDI, 313 CDI, 315 CDI, 318 CDI, 324** 06/06 - 65 -190 kW		**39-208392**	with standard chassis; mark: 2 Stufig mit Tilger
B3	**309 CDI, 310 CDI, 311 CDI, 313 CDI, 315 CDI, 318 CDI, 324** 06/06 - 65 -190 kW		**39-208347**	with standard chassis; with air suspension
B3	**309 CDI, 310 CDI, 311 CDI, 313 CDI, 315 CDI, 318 CDI, 324** 06/06 - 65 -190 kW		**39-208408**	with off-road suspension
B4	**309 CDI, 310 CDI, 311 CDI, 313 CDI, 315 CDI, 316, 316 CDI, 318 CDI, 319 CDI, 324** 06/06 - 65 -190 kW	**22-184238**	**19-171579** OIO	with standard chassis
B4	**309 CDI, 310 CDI, 311 CDI, 313 CDI, 315 CDI, 316, 316 CDI, 318 CDI, 319 CDI, 324** 06/06 - 65 -190 kW	**22-184245**	**19-169279** OIO	Heavy Duty Version .

MERCEDES-BENZ SPRINTER 3,5 Flatbed / Chassis (906)

B1	**309 CDI, 310 CDI, 311 CDI, 313 CDI, 315 CDI, 316, 316 CDI, 318 CDI, 319 CDI, 324** 06/06 - 65 -190 kW	**12-224265**		VA: without ball bearing

MERCEDES-BENZ				
MERCEDES-BENZ SPRINTER 3,5 Flatbed / Chassis (906)				
B3	**309 CDI, 310 CDI, 311 CDI, 313 CDI, 315 CDI, 318 CDI, 324** 06/06 - 65 -190 kW		**39-208385**	with standard chassis; max. load: 3880 kg
B3	**309 CDI, 310 CDI, 311 CDI, 313 CDI, 315 CDI, 318 CDI, 324** 06/06 - 65 -190 kW		**39-208361**	with standard chassis; Heavy Duty Version .
B3	**309 CDI, 310 CDI, 311 CDI, 313 CDI, 315 CDI, 318 CDI, 324** 06/06 - 65 -190 kW		**39-208392**	with standard chassis; mark: 2 Stufig mit Tilger
B3	**309 CDI, 310 CDI, 311 CDI, 313 CDI, 315 CDI, 318 CDI, 324** 06/06 - 65 -190 kW		**39-208347**	with standard chassis; with air suspension
B3	**309 CDI, 310 CDI, 311 CDI, 313 CDI, 315 CDI, 318 CDI, 324** 06/06 - 65 -190 kW		**39-208408**	with off-road suspension
B4	**309 CDI, 310 CDI, 311 CDI, 313 CDI, 315 CDI, 316, 316 CDI, 318 CDI, 319 CDI, 324** 06/06 - 65 -190 kW	**22-184238**	**19-171579** OIO	with standard chassis
B4	**309 CDI, 310 CDI, 311 CDI, 313 CDI, 315 CDI, 316, 316 CDI, 318 CDI, 319 CDI, 324** 06/06 - 65 -190 kW	**22-184245**	**19-169279** OIO	Heavy Duty Version .
MERCEDES-BENZ SPRINTER 4,6-t Box (906)				
B1	**413 CDI, 416 CDI, 419 CDI, 424** 06/06 - 95 -190 kW	**12-224265**		VA: without ball bearing
B4	**413 CDI, 416 CDI, 419 CDI, 424** 06/06 - 95 -190 kW	**22-184245**	**19-169163** OIO	with standard chassis
MERCEDES-BENZ SPRINTER 4,6-t Flatbed / Chassis (906)				
B1	**413 CDI, 415 CDI, 416 CDI, 418 CDI, 419 CDI, 424** 06/06 - 95 -190 kW	**12-224265**		VA: without ball bearing
B4	**413 CDI, 415 CDI, 416 CDI, 418 CDI, 419 CDI, 424** 06/06 - 95 -190 kW	**22-184245**	**19-169163** OIO	with standard chassis
MERCEDES-BENZ SPRINTER 5-t Box (906)				
B1	**509 CDI, 510 CDI, 511 CDI, 513 CDI, 515 CDI, 516 CDI, 518 CDI, 519 CDI, 524** 06/06 - 65 -190 kW	**12-224265**		VA: without ball bearing
B3	**509 CDI, 511 CDI, 515 CDI, 518 CDI, 524** 06/06 - 65 -190 kW		**39-208378**	with standard chassis
B3	**509 CDI, 511 CDI, 515 CDI, 518 CDI, 524** 06/06 - 65 -190 kW		**39-208897**	with standard chassis; Heavy Duty Version .
B3	**509 CDI, 511 CDI, 515 CDI, 518 CDI, 524** 06/06 - 65 -190 kW		**39-208903**	with standard chassis; mark: schwächere Feder
B4	**509 CDI, 510 CDI, 511 CDI, 513 CDI, 515 CDI, 516 CDI, 518 CDI, 519 CDI, 524** 06/06 - 65 -190 kW	**22-184245**	**19-169163** OIO	with standard chassis

M

MERCEDES-BENZ				
MERCEDES-BENZ SPRINTER 5-t Flatbed / Chassis (906)				
B1	**509 CDI, 510 CDI, 511 CDI, 513 CDI, 515 CDI, 516, 516 CDI, 518 CDI, 519 CDI, 524** 06/06 - 65 -190 kW	**12-224265**		VA: without ball bearing
B3	**509 CDI, 511 CDI, 515 CDI, 518 CDI, 524** 06/06 - 65 -190 kW		**39-208378**	with standard chassis
B3	**509 CDI, 511 CDI, 515 CDI, 518 CDI, 524** 06/06 - 65 -190 kW		**39-208897**	with standard chassis; Heavy Duty Version .
B3	**509 CDI, 511 CDI, 515 CDI, 518 CDI, 524** 06/06 - 65 -190 kW		**39-208903**	with standard chassis; mark: schwächere Feder
B4	**509 CDI, 510 CDI, 511 CDI, 513 CDI, 515 CDI, 516, 516 CDI, 518 CDI, 519 CDI, 524** 06/06 - 65 -190 kW	**22-184245**	**19-169163**	with standard chassis
MERCEDES-BENZ SPRINTER Flatbed / Chassis				
B3	**616 CDI** 04/01 - 115 kW		**39-208262**	HA: Parabolic Spring with supporting spring
MERCEDES-BENZ SPRINTER Dumptruck				
B3	**616 CDI** 04/01 - 115 kW		**39-208262**	HA: Parabolic Spring with supporting spring
MERCEDES-BENZ T1 Bus (601)				
B4	**207 D 2.4, 208 2.3, 208 D 2.3, 209 D 2.9, 210 2.3, 210 D 2.8** 05/77 - 02/96 48 -77 kW	**19-064512**	**19-064529**	
B6 Sport	**207 D 2.4, 208 2.3, 208 D 2.3, 209 D 2.9, 210 2.3, 210 D 2.8** 05/77 - 02/96 48 -77 kW		**24-015035**	
MERCEDES-BENZ T1 Box (601)				
B4	**207 D 2.4, 208 D 2.3, 209 D 2.9, 210 2.3, 210 D 2.8** 06/82 - 02/96 53 -77 kW	**19-064512**	**19-064529**	
B6 Sport	**207 D 2.4, 208 D 2.3, 209 D 2.9, 210 2.3, 210 D 2.8** 06/82 - 02/96 53 -77 kW		**24-015035**	
MERCEDES-BENZ T1 Flatbed / Chassis (601)				
B4	**207 D 2.4, 208 D 2.3, 209 D 2.9, 210 2.3, 210 D 2.8, 210 D 2.9** 04/77 - 02/96 48 -72 kW	**19-064512**	**19-064529**	
B6 Sport	**207 D 2.4, 208 D 2.3, 209 D 2.9, 210 2.3, 210 D 2.8, 210 D 2.9** 04/77 - 02/96 48 -72 kW		**24-015035**	
MERCEDES-BENZ T1 Bus (602)				
B4	**308 D 2.3, 310 D 2.9** 06/89 - 02/96 58 -72 kW	**19-064512**	**19-064529**	
B6 Sport	**308 D 2.3, 310 D 2.9** 06/89 - 02/96 58 -72 kW		**24-015035**	

M

MERCEDES-BENZ				
MERCEDES-BENZ T1 Box (602)				
B4	**307 D 2.4, 308 D 2.3, 309 D 3.0, 310 D 2.9** 10/82 - 02/96 53 -72 kW	**19-064512** OIO	**19-064529** OIO	
B6 Sport	**307 D 2.4, 308 D 2.3, 309 D 3.0, 310 D 2.9** 10/82 - 02/96 53 -72 kW		**24-015035** OIO	
MERCEDES-BENZ T1 Flatbed / Chassis (602)				
B4	**307 D 2.4, 308 D 2.3** 04/77 - 02/96 48 -60 kW	**19-064512** OIO	**19-064529** OIO	
B6 Sport	**307 D 2.4, 308 D 2.3** 04/77 - 02/96 48 -60 kW		**24-015035** OIO	
MERCURY				
MERCURY GRAND MARQUIS				
B6 Sport	**4.6** 01/91 - 09/99 157 kW	*24-184724*	**24-184748**	mark: Heavy Duty; without ride height adjustment
MG				
MG 1300 Mk.II				
B6 Sport	**1300** 09/67 - 09/70 52 kW	**24-181464** OIO	**24-181471** I O	
MG MGF (RD)				
B6 Sport	**1,8 i VVC, 1.6, 1.8 i 16V, 1.8 i VVC** 03/95 - 03/02 82 -118 kW	**24-025287** I O	**24-025287** I O	without pneumatic suspension
MINI				
MINI MINI-MOKE				
B6 Sport	**1.0** 01/87 - 29 kW	**24-181464** OIO	**24-181471** I O	
MINI MINI (R50, R53)				
B1	**Cooper, One, Works** 06/01 - 66 -155 kW	**12-224296**		VA: 03/02 ->
B3	**1.4, One** 06/01 - 55 -66 kW	**37-162023**	**36-161980**	with standard chassis
B3	**1.4, Cooper, Cooper S, One** 06/01 - 55 -125 kW	**37-161972**	**36-161997**	with standard chassis; Heavy Duty Version .
B3	**Cooper, Cooper S** 06/01 - 85 -125 kW	**37-161941**	**36-161843**	with standard chassis
B3	**One D** 06/03 - 55 -65 kW	**37-161972**	**36-161997**	with standard chassis
B4	**1.4, Cooper S, One D, Works** 03/02 - 11/06 55 -155 kW	**22-119186** **22-119193**	**19-119205** I O	mark: ex. JC Works GP
B4	**Cooper, One** 03/02 - 11/06 66 -85 kW	**22-119186** **22-119193**	**19-119205** I O	

MINI				
MINI MINI (R50, R53)				
B6 Sport	**1.4, Cooper S** 03/02 - 11/06 55 -120 kW	**35-103233** **35-103240**	**24-103251**	mark: R50,R53
B6 Sport	**One** 03/02 - 11/06 66 kW	**35-103233** **35-103240**	**24-103251**	mark: R50, R53
B6 Sport	**Cooper** 03/02 - 11/06 85 kW	**35-103233** **35-103240**	**24-103251**	
B6 Sport	**1.6 GLX, Cooper S, One D, Works** 06/03 - 11/06 55 -155 kW	**35-103233** **35-103240**	**24-103251**	mark: R50,R53; mark: ex. JC Works GP
B8	**1.6 GLX, Cooper** 03/02 - 85 -147 kW	**35-103233** **35-103240**	**24-103251**	mark: R50,R53
B12 PK	**Cooper, One** 03/02 - 11/06 66 -85 kW	**46-180452**		Conditions see certificates VA: lowering (expertise): 30 mm; axle load to: 890 kg HA: lowering (expertise): 30 mm; axle load to: 800 kg
B12 PK	**Cooper S, One D** 03/02 - 55 -125 kW	**46-180452**		mark: ex. JC Works GP; Conditions see certificates VA: lowering (expertise): 30 mm; axle load to: 890 kg HA: lowering (expertise): 30 mm; axle load to: 800 kg
B14	**1.4, 1.6 GLX, Cooper S, One D, Works** 03/02 - 11/06 55 -155 kW	**47-126916**		mark: R50,R53; mark: ex. JC Works GP; Conditions see certificates VA: lowering (expertise): 30-50 mm; axle load to: 890 kg HA: lowering (expertise): 30-50 mm; axle load to: 760 kg
B14	**Cooper, One** 06/01 - 02/02 66 -85 kW	**47-126916**		mark: R50, R53; Conditions see certificates; Only in connection with 31 30 6 769 741; Only in connection with 31 33 6 759 452; Only in connection with 31 33 0 146 229; Only in connection with 31 33 0 146 240; Only in connection with 31 33 0 146 241 VA: lowering (expertise): 30-50 mm; axle load to: 890 kg HA: lowering (expertise): 30-50 mm; axle load to: 760 kg
B14	**Cooper, One** 03/02 - 11/06 66 -85 kW	**47-126916**		mark: R50, R53; Conditions see certificates VA: lowering (expertise): 30-50 mm; axle load to: 890 kg HA: lowering (expertise): 30-50 mm; axle load to: 760 kg
B16 PSS10	**1.4, 1.6 GLX, Cooper, Cooper S, One, One D, Works** 03/03 - 11/06 55 -155 kW	**48-136648**		mark: R50,R53; mark: ex. JC Works GP; Conditions see certificates VA: lowering (expertise): 30-50 mm; axle load to: 890 kg HA: lowering (expertise): 30-50 mm
B16 PSS10	**Cooper, One** 06/01 - 02/02 66 -85 kW	**48-136648**		additional original parts required; mark: R50, R53; Conditions see certificates; Only in connection with 31 30 6 769 741; Only in connection with 31 33 6 759 452; Only in connection with 31 33 0 146 229; Only in connection with 31 33 0 146 240; Only in connection with 31 33 0 146 241 VA: lowering (expertise): 30-50 mm; axle load to: 890 kg HA: lowering (expertise): 30-50 mm
MINI MINI Convertible (R52)				
B1	**Cooper, Cooper S, One, Works** 07/04 - 66 -155 kW	**12-224296**		VA: with ball bearing
B3	**One** 07/04 - 66 kW	**37-161927**	**36-161553**	with standard chassis
B3	**One** 07/04 - 66 kW	**37-161972**		with standard chassis; Heavy Duty Version .
B3	**Cooper** 07/04 - 85 kW	**37-161927**	**36-161553**	with standard chassis
B3	**Cooper** 07/04 - 85 kW	**37-161972**		with standard chassis; Heavy Duty Version .
B3	**Cooper S** 07/04 - 125 kW	**37-161910**	**36-161553**	with standard chassis
B4	**Cooper, One** 07/04 - 66 -85 kW	**22-119186** **22-119193**	**19-119205**	mark: R52

M

MINI				
MINI MINI Convertible (R52)				
B6 Sport	**Cooper, Cooper S, One, Works** 07/04 - 66 -155 kW	**35-103233** **35-103240**	**24-103251**	mark: R52
B12 PK	**Cooper, Cooper S, One** 07/04 - 66 -125 kW	**46-180452**		Conditions see certificates VA: lowering (expertise): 30 mm; axle load to: 890 kg HA: lowering (expertise): 30 mm; axle load to: 800 kg
B14	**Cooper, Cooper S, One, Works** 07/04 - 66 -155 kW	**47-126916**		mark: R52; Conditions see certificates VA: lowering (expertise): 30-50 mm; axle load to: 890 kg HA: lowering (expertise): 30-50 mm; axle load to: 760 kg
B16 PSS10	**Cooper, Cooper S, One, Works** 07/04 - 66 -155 kW	**48-136648**		mark: R52; Conditions see certificates VA: lowering (expertise): 30-50 mm; axle load to: 890 kg HA: lowering (expertise): 30-50 mm; axle load to: 800 kg
MINI MINI (R56)				
B1	**1.6, Cooper, Cooper D, Cooper S, Cooper SD, John Cooper Works, One, One D** 03/07 - 55 -160 kW	**12-226351**		VA: with ball bearing
B4	**1.6, Cooper, Cooper D, Cooper S, Cooper SD, John Cooper Works, One, One D** 03/07 - 06/11 55 -160 kW	**22-170996** **22-171009**	**19-171586** **19-000725**	with standard chassis
B4	**1.6, Cooper, Cooper D, Cooper S, Cooper SD, John Cooper Works, One, One D** 07/11 - 55 -160 kW	**22-170996** **22-171009**	**19-215990**	with standard chassis
B4	**1.6, Cooper, Cooper D, Cooper S, Cooper SD, John Cooper Works, One, One D** 03/07 - 06/11 55 -160 kW	**22-215895** **22-215949**	**19-215976** **19-215983**	with sports suspension
B4	**1.6, Cooper, Cooper D, Cooper S, Cooper SD, John Cooper Works, One, One D** 07/11 - 55 -160 kW	**22-215895** **22-215949**	**19-216003**	with sports suspension
B6 Sport	**Cooper S** 01/12 - 147 kW	**35-139362** **35-139379**	**24-139380** **24-139397**	with standard chassis; mark: R56; Only in connection with 2x 33 50 6 778 572
B6 Sport	**1.6, Cooper, Cooper D, Cooper S, Cooper SD, John Cooper Works, One, One D** 03/07 - 06/11 55 -160 kW	**35-139362** **35-139379**	**24-139380** **24-139397**	with standard chassis; mark: R56
B6 Sport	**1.6, Cooper, Cooper D, Cooper S, Cooper SD, John Cooper Works, One, One D** 07/11 - 55 -160 kW	**35-139362** **35-139379**	**24-139380** **24-139397**	with standard chassis; mark: R56; Only in connection with 2x 33 50 6 778 572
B8	**Cooper S** 01/12 - 147 kW	**35-142287** **35-142294**	**24-142304** **24-142311**	with sports suspension; mark: R56; Only in connection with 2x 33 50 6 778 572
B8	**1.6, Cooper, Cooper D, Cooper S, Cooper SD, John Cooper Works, One, One D** 03/07 - 06/11 55 -160 kW	**35-142287** **35-142294**	**24-142304** **24-142311**	with sports suspension; mark: R56
B8	**1.6, Cooper, Cooper D, Cooper S, Cooper SD, John Cooper Works, One, One D** 07/11 - 55 -160 kW	**35-142287** **35-142294**	**24-142304** **24-142311**	with sports suspension; mark: R56; Only in connection with 2x 33 50 6 778 572
B12 PK	**Cooper, Cooper D, Cooper S, One, One D** 06/09 - 06/11 55 -135 kW	**46-180469**		Conditions see certificates VA: lowering (expertise): 25-30 mm; axle load to: 905 kg HA: lowering (expertise): 25-30 mm; axle load to: 755 kg
B12 PK	**Cooper, Cooper D, Cooper S, One, One D** 07/11 - 55 -135 kW	**46-180469**		Conditions see certificates; Only in connection with 2x 33 50 6 778 572 VA: lowering (expertise): 25-30 mm; axle load to: 905 kg HA: lowering (expertise): 25-30 mm; axle load to: 755 kg

M

MINI

MINI MINI (R56)

B12 PK	**Cooper S** 01/12 - 147 kW	**46-180469**		Conditions see certificates; Only in connection with 2x 33 50 6 778 572 VA: lowering (expertise): 25-30 mm; axle load to: 905 kg HA: lowering (expertise): 25-30 mm; axle load to: 755 kg
B14	**Cooper S** 01/12 - 147 kW	**47-139060**		mark: R56; Conditions see certificates; Only in connection with 2x 33 50 6 778 572 VA: lowering (expertise): 30-50 mm; axle load to: 905 kg HA: lowering (expertise): 30-50 mm; axle load to: 855 kg
B14	**1.6, Cooper, Cooper D, Cooper S, Cooper SD, John Cooper Works, One, One D** 03/07 - 06/11 55 -160 kW	**47-139060**		mark: R56; Conditions see certificates VA: lowering (expertise): 30-50 mm; axle load to: 905 kg HA: lowering (expertise): 30-50 mm; axle load to: 855 kg
B14	**1.6, Cooper, Cooper D, Cooper S, Cooper SD, John Cooper Works, One, One D** 07/11 - 55 -160 kW	**47-139060**		mark: R56; Conditions see certificates; Only in connection with 2x 33 50 6 778 572 VA: lowering (expertise): 30-50 mm; axle load to: 905 kg HA: lowering (expertise): 30-50 mm; axle load to: 855 kg
B16 PSS10	**Cooper S** 01/12 - 147 kW	**48-153720**		mark: R56; Conditions see certificates; Only in connection with 2x 33 50 6 778 572 VA: lowering (expertise): 30-50 mm; axle load to: 905 kg HA: lowering (expertise): 30-50 mm; axle load to: 855 kg
B16 PSS10	**1.6, Cooper, Cooper D, Cooper S, Cooper SD, John Cooper Works, One, One D** 03/07 - 06/11 55 -160 kW	**48-153720**		mark: R56; Conditions see certificates VA: lowering (expertise): 30-50 mm; axle load to: 905 kg HA: lowering (expertise): 30-50 mm; axle load to: 855 kg
B16 PSS10	**1.6, Cooper, Cooper D, Cooper S, Cooper SD, John Cooper Works, One, One D** 07/11 - 55 -160 kW	**48-153720**		mark: R56; Conditions see certificates; Only in connection with 2x 33 50 6 778 572 VA: lowering (expertise): 30-50 mm; axle load to: 905 kg HA: lowering (expertise): 30-50 mm; axle load to: 855 kg

MINI MINI CLUBMAN (R55)

B1	**1.6, 1.6 D, Cooper, Cooper D, Cooper S, Cooper SD, John Cooper Works, One, One D** 10/07 - 66 -155 kW	**12-226351**		VA: with ball bearing
B4	**1.6, 1.6 D, Cooper, Cooper D, Cooper S, Cooper SD, John Cooper Works, One, One D** 10/07 - 06/11 66 -155 kW	**22-170996** ↰ **22-171009** ↱	**19-171586** ↲ **19-000725** ↳	with standard chassis
B4	**1.6, 1.6 D, Cooper, Cooper D, Cooper S, Cooper SD, John Cooper Works, One, One D** 07/11 - 66 -155 kW	**22-170996** ↰ **22-171009** ↱	**19-215990**	with standard chassis
B6 Sport	**1.6, 1.6 D, Cooper, Cooper D, Cooper S, Cooper SD, John Cooper Works, One, One D** 10/07 - 06/11 66 -155 kW	**35-139362** ↰ **35-139379** ↱	**24-139380** ↲ **24-139397** ↳	with standard chassis
B6 Sport	**1.6, 1.6 D, Cooper, Cooper D, Cooper S, Cooper SD, John Cooper Works, One, One D** 07/11 - 66 -155 kW	**35-139362** ↰ **35-139379** ↱	**24-139380** ↲ **24-139397** ↳	with standard chassis; Only in connection with 2x 33 50 6 778 572
B8	**1.6, 1.6 D, Cooper, Cooper D, Cooper S, Cooper SD, John Cooper Works, One, One D** 10/07 - 06/11 66 -155 kW	**35-142287** ↰ **35-142294** ↱	**24-142304** ↲ **24-142311** ↳	with sports suspension
B8	**1.6, 1.6 D, Cooper, Cooper D, Cooper S, Cooper SD, John Cooper Works, One, One D** 07/11 - 66 -155 kW	**35-142287** ↰ **35-142294** ↱	**24-142304** ↲ **24-142311** ↳	with sports suspension; Only in connection with 2x 33 50 6 778 572
B12 PK	**1.6, 1.6 D, Cooper, Cooper D, Cooper S, Cooper SD, One, One D** 10/07 - 06/11 66 -135 kW	**46-180476**		Conditions see certificates VA: lowering (expertise): 30 mm; axle load to: 905 kg HA: without ride height adjustment; lowering (expertise): 20 mm; axle load to: 855 kg
B12 PK	**1.6, 1.6 D, Cooper, Cooper D, Cooper S, Cooper SD, One, One D** 07/11 - 66 -135 kW	**46-180476**		Conditions see certificates; Only in connection with 2x 33 50 6 778 572 VA: lowering (expertise): 30 mm; axle load to: 905 kg HA: without ride height adjustment; lowering (expertise): 20 mm; axle load to: 855 kg

MINI			
MINI MINI CLUBMAN (R55)			
B14 **1.6, 1.6 D, Cooper, Cooper D, Cooper S, Cooper SD, John Cooper Works, One, One D** 10/07 - 06/11 66 -155 kW	**47-139060**		Conditions see certificates VA: lowering (expertise): 30-50 mm; axle load to: 905 kg HA: lowering (expertise): 30-50 mm; axle load to: 855 kg
B14 **1.6, 1.6 D, Cooper, Cooper D, Cooper S, Cooper SD, John Cooper Works, One, One D** 07/11 - 66 -155 kW	**47-139060**		Conditions see certificates; Only in connection with 2x 33 50 778 572 VA: lowering (expertise): 30-50 mm; axle load to: 905 kg HA: lowering (expertise): 30-50 mm; axle load to: 855 kg
B16 PSS10 **1.6, 1.6 D, Cooper, Cooper D, Cooper S, Cooper SD, John Cooper Works, One, One D** 10/07 - 06/11 66 -155 kW	**48-153720**		Conditions see certificates VA: lowering (expertise): 30-50 mm; axle load to: 905 kg HA: lowering (expertise): 30-50 mm; axle load to: 855 kg
B16 PSS10 **1.6, 1.6 D, Cooper, Cooper D, Cooper S, Cooper SD, John Cooper Works, One, One D** 07/11 - 66 -155 kW	**48-153720**		Conditions see certificates; Only in connection with 2x 33 50 778 572 VA: lowering (expertise): 30-50 mm; axle load to: 905 kg HA: lowering (expertise): 30-50 mm; axle load to: 855 kg
MINI MINI Roadster (R59)			
B4 **Cooper, Cooper S, Cooper SD, John Cooper Works** 02/12 - 85 -155 kW	**22-170996** **22-171009**	**19-215990**	with standard chassis
B6 Sport **Cooper, Cooper S, Cooper SD, John Cooper Works** 02/12 - 85 -155 kW	**35-139362** **35-139379**	**24-139380** **24-139397**	with standard chassis; Only in connection with 2x 33 50 778 572
B8 **Cooper, Cooper S, Cooper SD, John Cooper Works** 02/12 - 85 -155 kW	**35-142287** **35-142294**	**24-142304** **24-142311**	with sports suspension; Only in connection with 2x 33 50 778 572
B14 **Cooper, Cooper S, Cooper SD, John Cooper Works** 02/12 - 85 -155 kW	**47-139060**		Conditions see certificates; Only in connection with 2x 33 50 778 572 VA: lowering (expertise): 30-50 mm; axle load to: 905 kg HA: lowering (expertise): 30-50 mm; axle load to: 855 kg
B16 PSS10 **Cooper, Cooper S, Cooper SD, John Cooper Works** 02/12 - 85 -155 kW	**48-153720**		Conditions see certificates; Only in connection with 2x 33 50 778 572 VA: lowering (expertise): 30-50 mm; axle load to: 905 kg HA: lowering (expertise): 30-50 mm; axle load to: 855 kg
MINI MINI Convertible (R57)			
B1 **1.6 Cooper, 1.6 Cooper S, Cooper, Cooper D, Cooper S, Cooper SD, John Cooper Works, One** 03/08 - 72 -155 kW	**12-226351**		VA: with ball bearing
B4 **1.6 Cooper, 1.6 Cooper S, Cooper, Cooper D, Cooper S, Cooper SD, John Cooper Works, One** 03/08 - 06/11 72 -155 kW	**22-170996** **22-171009**	**19-171586** **19-000725**	with standard chassis
B4 **1.6 Cooper, 1.6 Cooper S, Cooper, Cooper D, Cooper S, Cooper SD, John Cooper Works, One** 07/11 - 72 -155 kW	**22-170996** **22-171009**	**19-215990**	with standard chassis
B6 Sport **1.6 Cooper, 1.6 Cooper S, Cooper, Cooper D, Cooper S, Cooper SD, John Cooper Works, One** 03/08 - 06/11 72 -155 kW	**35-139362** **35-139379**	**24-139380** **24-139397**	with standard chassis; mark: R57
B6 Sport **1.6 Cooper, 1.6 Cooper S, Cooper, Cooper D, Cooper S, Cooper SD, John Cooper Works, One** 07/11 - 72 -155 kW	**35-139362** **35-139379**	**24-139380** **24-139397**	with standard chassis; mark: R57; Only in connection with 2x 33 50 6 778 572
B8 **1.6 Cooper, 1.6 Cooper S, Cooper, Cooper D, Cooper S, Cooper SD, John Cooper Works, One** 03/08 - 06/11 72 -155 kW	**35-142287** **35-142294**	**24-142304** **24-142311**	with sports suspension; mark: R57

MINI				
MINI MINI Convertible (R57)				
B8	**1.6 Cooper, 1.6 Cooper S, Cooper, Cooper D, Cooper S, Cooper SD, John Cooper Works, One** 07/11 - 72 -155 kW	**35-142287** **35-142294**	**24-142304** **24-142311**	with sports suspension; mark: R57; Only in connection with 2x 33 50 6 778 572
B12 PK	**1.6 Cooper, 1.6 Cooper S, Cooper, Cooper D, Cooper S, One** 07/06 - 72 -135 kW	**46-180476**		Conditions see certificates; Only in connection with 2x 33 50 6 778 572 VA: lowering (expertise): 30 mm; axle load to: 905 kg HA: lowering (expertise): 20 mm; axle load to: 855 kg
B14	**1.6 Cooper, 1.6 Cooper S, Cooper, Cooper D, Cooper S, Cooper SD, John Cooper Works, One** 03/08 - 06/11 72 -155 kW	**47-139060**		mark: R57; Conditions see certificates VA: lowering (expertise): 30-50 mm; axle load to: 890 kg HA: lowering (expertise): 30-50 mm; axle load to: 800 kg
B14	**1.6 Cooper, 1.6 Cooper S, Cooper, Cooper D, Cooper S, Cooper SD, John Cooper Works, One** 07/11 - 72 -155 kW	**47-139060**		mark: R57; Conditions see certificates; Only in connection with 2x 33 50 6 778 572 VA: lowering (expertise): 30-50 mm; axle load to: 890 kg HA: lowering (expertise): 30-50 mm; axle load to: 800 kg
B16 PSS10	**1.6 Cooper, 1.6 Cooper S, Cooper, Cooper D, Cooper S, Cooper SD, John Cooper Works, One** 03/08 - 06/11 72 -155 kW	**48-153720**		mark: R56; Conditions see certificates VA: lowering (expertise): 30-50 mm; axle load to: 905 kg HA: lowering (expertise): 30-50 mm; axle load to: 855 kg
B16 PSS10	**1.6 Cooper, 1.6 Cooper S, Cooper, Cooper D, Cooper S, Cooper SD, John Cooper Works, One** 07/11 - 72 -155 kW	**48-153720**		mark: R56; Conditions see certificates; Only in connection with 2x 33 50 778 572 VA: lowering (expertise): 30-50 mm; axle load to: 905 kg HA: lowering (expertise): 30-50 mm; axle load to: 855 kg
MINI MINI COUNTRYMAN (R60)				
B1	**COOPER, COOPER D, COOPER D ALL4, COOPER S, COOPER S ALL4, Cooper SD, Cooper SD ALL4, ONE, ONE D** 06/10 - 66 -135 kW	**12-226351**		VA: with ball bearing
B4	**COOPER, COOPER D, COOPER D ALL4, COOPER S, COOPER S ALL4, Cooper SD, Cooper SD ALL4, ONE, ONE D** 06/10 - 66 -135 kW	**22-213709** **22-213716**	**19-213729** **19-213736**	with standard chassis
B6 Sport	**COOPER, COOPER D, COOPER D ALL4, COOPER S, COOPER S ALL4, Cooper SD, Cooper SD ALL4, ONE, ONE D** 06/10 - 66 -135 kW	**35-195382** **35-195399**	**24-195409** **24-195416**	
MINI MINI Coupe (R58)				
B1	**Cooper, Cooper S, Cooper SD, John Cooper Works** 09/11 - 85 -155 kW	**12-226351**		VA: with ball bearing
B4	**Cooper, Cooper S, Cooper SD, John Cooper Works** 09/11 - 85 -155 kW	**22-170996** **22-171009**	**19-215990**	with standard chassis
B4	**Cooper, Cooper S, Cooper SD, John Cooper Works** 09/11 - 85 -155 kW	**22-215895** **22-215949**	**19-216003**	with sports suspension
B6 Sport	**Cooper, Cooper S, Cooper SD, John Cooper Works** 09/11 - 85 -155 kW	**35-139362** **35-139379**	**24-139380** **24-139397**	with standard chassis; Only in connection with 2x 33 50 778 572

M

MINI				
MINI MINI Coupe (R58)				
B8	**Cooper, Cooper S, Cooper SD, John Cooper Works** 09/11 - 85 -155 kW	**35-142287** **35-142294**	**24-142304** **24-142311**	with sports suspension; Only in connection with 2x 33 50 778 572
B12 PK	**Cooper, Cooper S, Cooper SD, John Cooper Works** 09/11 - 85 -155 kW	**46-180469**		Conditions see certificates; Only in connection with 2x 33 50 6 778 572 VA: lowering (expertise): 25-30 mm; axle load to: 905 kg HA: lowering (expertise): 25-30 mm; axle load to: 755 kg
B14	**Cooper, Cooper S, Cooper SD, John Cooper Works** 09/11 - 85 -155 kW	**47-139060**		Conditions see certificates; Only in connection with 2x 33 50 778 572 VA: lowering (expertise): 30-50 mm; axle load to: 905 kg HA: lowering (expertise): 30-50 mm; axle load to: 855 kg
B16 PSS10	**Cooper, Cooper S, Cooper SD, John Cooper Works** 09/11 - 85 -155 kW	**48-153720**		Conditions see certificates; Only in connection with 2x 33 50 778 572 VA: lowering (expertise): 30-50 mm; axle load to: 905 kg HA: lowering (expertise): 30-50 mm; axle load to: 855 kg
MITSUBISHI				
MITSUBISHI CARISMA (DA_)				
B3	**1.6** 07/95 - 06/06 66 -73 kW		**36-154845**	with standard chassis
B3	**1.8, 1.8 16V, 1.8 16V GDI, 1.9 TD** 07/95 - 06/06 66 -103 kW	**36-154852**	**36-154845**	with standard chassis
B4	**1.6** 07/95 - 06/06 66 -73 kW	*22-047755* *22-047762*	**19-061283**	with standard chassis
B4	**1.8, 1.8 16V, 1.8 16V GDI** 07/95 - 06/06 85 -103 kW	**22-046819** **22-046802**	**19-061283**	with standard chassis
B4	**1.9 TD** 10/96 - 09/00 66 kW	*22-047755* *22-047762*	**19-061283**	with standard chassis
MITSUBISHI CARISMA Saloon (DA_)				
B3	**1.6** 09/96 - 06/06 66 -76 kW		**36-154845**	with standard chassis
B3	**1.8, 1.8 16V GDI, 1.8 GDI, 1.9 TD** 09/96 - 06/06 66 -92 kW	**36-154852**	**36-154845**	with standard chassis
B4	**1.3, 1.6** 05/97 - 06/06 55 -76 kW	*22-047755* *22-047762*	**19-061283**	with standard chassis
B4	**1.8, 1.8 16V GDI** 09/96 - 06/06 85 -92 kW	**22-046819** **22-046802**	**19-061283**	
B4	**1.9 TD** 10/96 - 09/00 66 kW	*22-047755* *22-047762*	**19-061283**	with standard chassis
MITSUBISHI CELESTE (A7_)				
B6 Sport	**1.6 ST, 2.0 GSR** 10/75 - 06/81 54 -77 kW	*34-000885*	*24-004565*	VA: Quick Repair Service .; Used part return required . HA: Quick Repair Service .; Used part return required .
MITSUBISHI COLT I (A15_A)				
B6 Sport	**1.2 GL, 1.4 GLX,GT, 1.4 Turbo** 12/78 - 01/84 40 -77 kW	*34-000670*		VA: Quick Repair Service .; Used part return required .
MITSUBISHI COLT II (C1_A)				
B3	**1.2 EL,GL, 1.5 GLX, 1.6 Turbo ECi** 02/84 - 04/88 40 -92 kW	**36-162765**	**36-162635**	with standard chassis

MITSUBISHI

MITSUBISHI COLT II (C1_A)

B3	**1.8 GL Diesel** 02/84 - 04/88 43 -44 kW		**36-162635**	with standard chassis
B4	**1.2 EL,GL** 02/84 - 09/86 40 kW	*22-045072*	*19-028767*	
B4	**1.2 EL,GL, 1.3 EL,GL** 06/86 - 04/88 44 -49 kW	*22-045089*	*19-028767*	
B4	**1.5 GLX** 09/84 - 05/86 51 -55 kW	*22-045072*	*19-028767*	
B4	**1.5 GLX** 05/86 - 04/88 51 -55 kW	*22-045089*	*19-028767*	
B4	**1.6 Turbo ECi** 07/86 - 04/88 77 kW	*22-045089*	*19-028767*	
B4	**1.6 Turbo ECi** 02/84 - 05/86 92 kW	*22-045072*	*19-028767*	
B4	**1.6 Turbo ECi** 05/86 - 04/88 92 kW	*22-045089*	*19-028767*	
B4	**1.8 GL Diesel** 02/84 - 09/86 43 kW	*22-045072*	*19-028767*	
B4	**1.8 GL Diesel** 09/86 - 04/88 44 kW	*22-045089*	*19-028767*	

MITSUBISHI COLT III (C5_A)

B3	**1.5 CAT, 1.5 GLXi, 1.6 GTi 16V, 1.8 Diesel GLX, 1.8 GTi 16V CAT** 06/90 - 05/92 44 -100 kW	*36-162222*		with standard chassis
B4	**1.3, 1.3 12V, 1.3 GL, 1.5 CAT, 1.5 GLXi, 1.6 GTi 16V** 04/88 - 05/92 44 -91 kW			
B4	**1.8 Diesel GLX** 04/88 - 05/92 44 kW			with standard chassis

MITSUBISHI COLT IV (CA_A)

B3	**1.3 GLi 12V** 04/92 - 04/96 55 kW	**36-216277**	**36-200542**	with standard chassis
B3	**1.3 GLi 12V** 04/92 - 04/96 55 kW	**36-216260**		with off-road suspension
B3	**1.6, 1.6 GLXi 16V** 04/92 - 04/96 66 -83 kW	**36-216277**	**36-200542**	with standard chassis; manual transmission
B3	**1.6, 1.6 GLXi 16V** 04/92 - 04/96 66 -83 kW	**36-216260**	**36-200542**	with standard chassis; automatic transmission
B3	**1.6, 1.6 GLXi 16V** 04/92 - 04/96 66 -83 kW	**36-216260**		with off-road suspension
B3	**1.8 GTi 16V** 04/92 - 04/96 103 kW		**36-200542**	with standard chassis
B4	**1.3 GLi 12V** 04/92 - 04/96 55 kW		*19-063386*	with standard chassis
B4	**1.3 GLi 12V** 04/92 - 04/96 55 kW		*19-063409*	with off-road suspension

MITSUBISHI

MITSUBISHI COLT IV (CA_A)

B4	**1.6, 1.6 GLXi 16V** 04/92 - 04/96 66 -83 kW		*19-063386*	with standard chassis
B4	**1.6, 1.6 GLXi 16V** 04/92 - 04/96 66 -83 kW		*19-063409*	with off-road suspension
B4	**1.8 GTi 16V** 04/92 - 04/96 103 kW	*22-047847* *22-047854*	*19-063386*	with standard chassis

MITSUBISHI COLT V (CJ_A)

B3	**1300, 1300 GL,GLX** 05/96 - 07/05 55 -60 kW	**36-216260**	**36-200924**	with standard chassis
B3	**1500** 11/95 - 07/05 69 kW	**36-216260**	**36-200542**	with standard chassis
B3	**1600, 1600 GLX** 05/96 - 07/05 66 -76 kW	**36-216260**	**36-200924**	with standard chassis; manual transmission
B3	**1600, 1600 GLX** 05/96 - 07/05 66 -76 kW	**36-216239**	**36-200924**	with standard chassis; automatic transmission
B4	**1300 GL,GLX** 05/96 - 09/00 55 kW		*19-063386*	with standard chassis
B4	**1300 GL,GLX** 05/96 - 09/00 55 kW		*19-063409*	with off-road suspension
B4	**1600 GLX** 05/96 - 09/00 66 kW		*19-063386*	with standard chassis
B4	**1600 GLX** 05/96 - 09/00 66 kW		*19-063409*	with off-road suspension
B4	**1.8, 1500** 11/95 - 07/05 69 -109 kW		*19-063386*	with standard chassis
B4	**1.8, 1500** 11/95 - 07/05 69 -109 kW		*19-063409*	with off-road suspension

MITSUBISHI COLT VI (Z_)

B3	**1.1, 1.3, 1.5, 1.5 CZT** 06/04 - 55 -110 kW	**36-216147**	**36-216161**	with standard chassis
B3	**1.5 DI-D** 08/04 - 50 -70 kW	**36-216154**	**36-216161**	with standard chassis
B4	**1.1, 1.3, 1.5, 1.5 DI-D** 08/04 - 50 -80 kW	**22-183583** **22-183590**	**19-166278**	
B4	**1.5, 1.5 CZT, 1.5 Turbo** 09/04 - 72 -113 kW		**19-166278**	
B14	**1.1, 1.3, 1.5, 1.5 CZT, 1.5 DI-D, 1.5 Turbo** 08/04 - 09/08 50 -113 kW	**47-168053**		Conditions see certificates VA: lowering (expertise): 35-50 mm; axle load to: 880 kg HA: lowering (expertise): 30-50 mm; axle load to: 750 kg

MITSUBISHI COLT CZC Convertible

B3	**1.5** 05/06 - 80 kW	**36-214846**	**36-214839**	with standard chassis

MITSUBISHI ECLIPSE I (D2_A)

B4	**2.0 i 16V 4x4, 2.0 Turbo 4WD** 12/89 - 11/95 110 -157 kW		*19-063379*	

MITSUBISHI

MITSUBISHI GALANT I (A12_)

B6 Sport	**1.6, 2.0, 2.0 GLX** 01/77 - 08/80 55 -72 kW	*34-000885*	*24-004541*	VA: Quick Repair Service .; Used part return required . HA: Quick Repair Service .; Used part return required .

MITSUBISHI GALANT III (E1_A)

B3	**1.6 GLX, 2.0 GLS, 2.0 Turbo ECi** 06/84 - 12/87 55 -110 kW	**36-162260**		with standard chassis
B4	**1.6 GLX, 1.8 Turbo-D, 2.0 GLS, 2.0 Turbo ECi, 2.4 GLS** 06/84 - 12/87 55 -110 kW	*22-045638*	*19-028859*	

MITSUBISHI GALANT IV (E3_A)

B4	**1.8, 1.8 Turbo-D, 2.0, 2.0 GTI 16V** 11/88 - 10/92 55 -107 kW		*19-028859*	

MITSUBISHI GALANT IV Saloon (E3_A)

B4	**1.6, 1.8, 1.8 Turbo-D, 2.0, 2.0 GTi 16V** 11/87 - 12/92 55 -106 kW		*19-028859*	

MITSUBISHI GALANT V (E5_A, E7_A, E8_A)

B4	**1.8, 1.8 GLSI, 2.0 GLSI, 2.0 GLSI 4x4, 2.0 GLSTD, 2.0 V6-24, 2.5, 2.5 V6-24 4x4** 11/92 - 09/96 66 -125 kW	*19-062990*	*19-063393*	without electronic suspension control

MITSUBISHI GALANT V Saloon (E5_A, E7_A, E8_A)

B4	**1.8, 1.8 GLSI, 2.0 GLSI, 2.0 GLSI 4x4, 2.0 GLSTD, 2.0 V6-24, 2.5 V6-24 4x4** 11/92 - 08/96 66 -125 kW	*19-062990*	*19-063393*	without electronic suspension control

MITSUBISHI GALANT VI (EA_)

B3	**2.0** 09/00 - 05/03 98 kW	36-219032		with standard chassis; manual transmission
B3	**2.0** 09/00 - 08/02 98 kW	36-219032		with standard chassis; automatic transmission
B3	**2.0** 09/02 - 05/03 98 kW	**36-219476**		with standard chassis; automatic transmission
B3	**2.0** 09/00 - 10/04 98 kW		**36-201471**	with standard chassis
B3	**2.0** 09/00 - 05/03 98 kW		36-219049	with standard chassis; Heavy Duty Version .; manual transmission
B3	**2.0** 09/00 - 08/02 98 kW		**36-215959**	with standard chassis; Heavy Duty Version .; automatic transmission
B3	**2.0** 09/02 - 05/03 98 kW		36-219049	with standard chassis; Heavy Duty Version .; automatic transmission
B3	**2.0** 09/96 - 09/00 100 kW	36-219032	**36-201471**	with standard chassis
B3	**2.0** 09/96 - 11/97 100 kW		**36-215959**	with standard chassis; Heavy Duty Version .
B3	**2.0** 12/97 - 09/00 100 kW		36-219049	with standard chassis; Heavy Duty Version .
B3	**2.4 GDI** 02/99 - 10/04 106 -110 kW	**36-219476**	**36-201471**	with standard chassis; manual transmission

M

MITSUBISHI				
MITSUBISHI GALANT VI (EA_)				
B3	**2.4 GDI, 2.5 V6 24V** 02/99 - 10/04 106 -118 kW		**36-219049**	with standard chassis; Heavy Duty Version .
B3	**2.5 V6 24V** 09/00 - 10/04 118 kW		**36-201471**	with standard chassis
B3	**2.0 TDI, 2.5 V6 24V** 09/96 - 11/97 66 -120 kW	**36-219032**	**36-201471**	with standard chassis
B3	**2.0 TDI, 2.5 V6 24V** 12/97 - 10/04 66 -120 kW	**36-219476**	**36-201471**	with standard chassis
B3	**2.0 TDI, 2.5 V6 24V** 09/96 - 11/97 66 -120 kW		**36-215959**	with standard chassis; Heavy Duty Version .
B3	**2.0 TDI, 2.5 V6 24V** 12/97 - 10/04 66 -120 kW		**36-219049**	with standard chassis; Heavy Duty Version .
B4	**1.8 GDi, 2.0, 2.0 GDi, 2.0 TDI, 2.4 GDI, 2.4 GDi Sport, 2.5 V6 24V** 09/96 - 10/04 66 -121 kW	*19-062990*	*19-063423*	
B6 Sport	**1.8 GDi, 2.0, 2.0 GDi, 2.0 TDI, 2.4 GDI, 2.4 GDi Sport, 2.5 Type S, 2.5 V6 24V** 09/96 - 10/04 66 -151 kW	**24-025829**	**24-025836**	
B8	**1.8 GDi, 2.0, 2.0 GDi, 2.0 TDI, 2.4 GDI, 2.4 GDi Sport, 2.5 Type S, 2.5 V6 24V** 09/96 - 10/04 66 -151 kW	**24-067461**	**24-067478**	
MITSUBISHI GALANT VI Estate (EA_)				
B4	**2.0, 2.0 TDI, 2.4 GDI, 2.5 V6 24V, 2.8 TD** 10/96 - 10/03 66 -120 kW	*19-062990*	*19-063423*	without ride height adjustment
B6 Sport	**2.0, 2.0 TDI, 2.4 GDI, 2.5 V6 24V, 2.8 TD** 10/96 - 10/03 66 -120 kW	**24-025829**	**24-025836**	HA: without ride height adjustment
B8	**2.0, 2.0 TDI, 2.4 GDI, 2.5 V6 24V, 2.8 TD** 10/96 - 10/03 66 -120 kW	**24-067461**	**24-067478**	
MITSUBISHI LANCER I (A17_)				
B6 Sport	**1.6** 09/79 - 02/83 60 -62 kW	*34-000885*	*24-004602*	VA: Quick Repair Service .; Used part return required . HA: Quick Repair Service .; Used part return required .
MITSUBISHI LANCER F II (A17_)				
B3	**1.2 GLX, 1.4 GLX, 1.4 Turbo** 03/83 - 01/84 40 -77 kW		**36-162635**	with standard chassis
MITSUBISHI LANCER III (C1_A, C6_A)				
B3	**1.2, 1.2 GL, 1.5 GLX** 11/83 - 04/88 40 -55 kW	**36-162765**	**36-162635**	with standard chassis
B3	**1.8 Diesel** 01/84 - 04/88 43 -44 kW		**36-162635**	with standard chassis
B4	**1.2, 1.5 GLX, 1.8 Diesel** 11/83 - 04/88 44 -55 kW	*22-045089*	*19-028767*	
MITSUBISHI LANCER III Station Wagon (C1_V, C3_V)				
B4	**1.3 GL, 1.5, 1.5 12V, 1.5 GLS, 1.8 D** 08/86 - 06/92 43 -66 kW	*22-045089*		

MITSUBISHI				
MITSUBISHI LANCER IV (C6_A, C7_A)				
B3	**1.3, 1.3 12V, 1.3 GL, 1.5, 1.5 12V, 1.6 GLi 16V, 1.6 GTi, 1.8 Diesel, 1.8 GTi, 1.8 GTi 16V, 2.0 D** 04/88 - 07/93 44 -103 kW	*36-162222*		with standard chassis
B4	**1.3 12V** 06/92 - 05/94 55 kW			without off-road suspension
B4	**1.3 12V** 06/92 - 05/94 55 kW		*19-063348*	with off-road suspension
B4	**1.5 12V** 05/89 - 05/92 66 kW			without off-road suspension
B4	**1.5 12V** 05/89 - 05/92 66 kW		*19-063348*	with off-road suspension
B4	**1.6 GLi 16V** 06/92 - 05/94 83 kW			
B4	**1.8 GLXi 4x4** 09/89 - 06/92 71 kW	*22-047816*		
B4	**1.8 GTi 16V** 11/89 - 12/93 100 -103 kW			
B4	**1.8 Diesel, 2.0 D** 04/88 - 07/93 44 -50 kW			
MITSUBISHI LANCER IV Saloon (C6_A)				
B3	**1.2 GL, 1.3, 1.3 12V, 1.3 GL, 1.5, 1.5 12V, 1.5 GLS, 1.6 GLX, 1.6 GTi, 1.8 GLX Diesel** 04/88 - 08/92 44 -91 kW	*36-162222*		with standard chassis
B4	**1.2 GL, 1.3, 1.3 GL, 1.5 GLS, 1.6 GLX, 1.6 GTi, 1.8 GLX Diesel** 04/88 - 08/92 44 -91 kW			
B4	**1.3, 1.3 12V** 04/88 - 06/92 44 -55 kW			without off-road suspension
B4	**1.3, 1.3 12V** 04/88 - 06/92 44 -55 kW		*19-063348*	with off-road suspension
B4	**1.5, 1.5 12V** 04/88 - 05/92 56 -66 kW		*19-063348*	with off-road suspension
B4	**1.5, 1.5 12V** 04/88 - 05/92 62 -66 kW			without off-road suspension
MITSUBISHI LANCER V (CB/D_A)				
B3	**1.6, 1.6 16V, 2.0 Diesel** 06/92 - 50 -83 kW	**36-216277**	**36-223046**	with standard chassis; mark: GLXI; manual transmission
B3	**1.6, 1.6 16V, 2.0 Diesel** 06/92 - 50 -83 kW	**36-216260**	**36-223046**	with standard chassis; mark: GLXI; automatic transmission
B3	**1.6, 1.6 16V, 2.0 Diesel** 06/92 - 50 -83 kW	**36-216260**	**36-223046**	with standard chassis; mark: GLI
B3	**1.6, 1.6 16V, 2.0 Diesel** 06/92 - 50 -83 kW	**36-200931**		with off-road suspension; mark: GLXI
B4	**1.3** 06/92 - 55 kW		*19-063386*	without off-road suspension

M

MITSUBISHI				
MITSUBISHI LANCER V (CB/D_A)				
B4	**1.3** 06/92 - 55 kW		*19-063409*	with off-road suspension
B4	**1.6, 1.6 16V** 06/92 - 66 -83 kW		*19-063386*	without off-road suspension
B4	**1.6, 1.6 16V** 06/92 - 66 -83 kW		*19-063409*	with off-road suspension
B4	**1.6 16V 4WD** 06/92 - 83 kW		*19-063386*	
B4	**2.0 Diesel** 06/92 - 50 kW		*19-063386*	without off-road suspension
B4	**2.0 Diesel** 06/92 - 50 kW		*19-063409*	with off-road suspension
MITSUBISHI LANCER V Station Wagon (CB_W, CD_W)				
B3	**1.6 GLXi 16V, 2.0 GLX D** 12/92 - 10/03 50 -83 kW	36-216277	**36-219322**	with standard chassis; mark: GLXI; manual transmission
B3	**1.6 GLXi 16V, 2.0 GLX D** 12/92 - 10/03 50 -83 kW	**36-216260**	**36-219322**	with standard chassis; mark: GLXI; automatic transmission
B3	**1.6 GLXi 16V, 2.0 GLX D** 12/92 - 10/03 50 -83 kW	**36-216260**	**36-219322**	with standard chassis; mark: GLI
B3	**1.6 GLXi 16V, 2.0 GLX D** 12/92 - 10/03 50 -83 kW	**36-200931**		with off-road suspension; mark: GLXI
MITSUBISHI LANCER VI (CK/P_A)				
B4	**1.3 12V GL,GLX** 12/95 - 08/03 55 kW		*19-063409*	with off-road suspension
B4	**1.3 12V GL,GLX** 12/95 - 08/03 55 kW	*22-047786*	*19-063386*	without off-road suspension
B4	**1.5, 1.5 16V, 1.5 GDi, 1.8 GDI, 1.8 i, 1.8 SEi Limited, 2.0 D, 2.0 GDi LS, 2.4** 09/95 - 50 -108 kW		*19-063409*	with off-road suspension
B4	**1.5, 1.5 16V, 1.5 GDi, 1.8 GDI, 1.8 i, 1.8 SEi Limited, 2.0 D, 2.0 GDi LS, 2.4** 09/95 - 50 -108 kW	*22-047786*	*19-063386*	without off-road suspension
B4	**1.6 16V, 1.8 16V** 12/95 - 08/03 66 -151 kW		*19-063409*	with off-road suspension
B4	**1.6 16V, 1.8 16V** 12/95 - 08/03 66 -151 kW	*22-047786*	*19-063386*	without off-road suspension
B14	**2.0 16V EVO VI / VII, 2.0 4x4, 2.0 16V EVO IX, 2.0 16V EVO VIII** 08/96 - 195 -213 kW	**47-118478**		mark: EVO 7; mark: CT9; Conditions see certificates VA: lowering (expertise): 40-50 mm; axle load to: 1015 kg HA: lowering (expertise): 40-50 mm; axle load to: 900 kg
B16 PSS9	**2.0 16V EVO VI / VII** 01/00 - 08/03 206 kW	**48-086424**		mark: CT9A/CT0; mark: EVO 7; Conditions see certificates VA: lowering (expertise): 40-50 mm; axle load to: 1015 kg HA: lowering (expertise): 40-50 mm; axle load to: 900 kg
MITSUBISHI LANCER Saloon (CS_A)				
B3	**1.3, 1.6** 09/03 - 60 -72 kW	**36-215041**	**36-218110**	with standard chassis
B4	**1.3, 1.6, 2.0** 09/03 - 60 -99 kW	**22-156679**	**19-156316**	

M

MITSUBISHI				
MITSUBISHI LANCER Saloon (CS_A)				
B6 Sport	**2.0 16V EVO IX, 2.0 16V EVO VIII** 03/04 - 195 -206 kW	**35-118435**	**24-118446**	mark: EVO 8
B8	**2.0 16V EVO IX, 2.0 16V EVO VIII** 03/04 - 195 -206 kW	**35-118459**	**24-118460**	mark: EVO 8
B16 PSS9	**2.0 4x4, 2.0 16V EVO IX, 2.0 16V EVO VIII** 03/04 - 195 -213 kW	**48-086424**		Conditions see certificates VA: lowering (expertise): 40-50 mm; axle load to: 1015 kg HA: lowering (expertise): 40-50 mm; axle load to: 900 kg
MITSUBISHI LANCER Estate (CS_W)				
B3	**1.6** 09/03 - 72 kW	**36-215041**	**36-215034**	with standard chassis; manual transmission
B3	**1.6** 09/03 - 72 kW	**36-214808**	**36-215034**	with standard chassis; automatic transmission
B3	**2.0** 09/03 - 12/07 99 kW	**36-214808**	**36-215034**	with standard chassis
B4	**1.6, 2.0, 2.4** 09/03 - 72 -99 kW	**22-156679**	**19-156316**	
MITSUBISHI LANCER Saloon (CY/Z_A)				
B4	**1.5, 1.8, 2.0 DI-D** 01/08 - 80 -105 kW	**22-213839** **22-213846**	i.V.	rim: 16"
MITSUBISHI OUTLANDER I (CU_)				
B4	**2.0 4WD, 2.0 Turbo 4WD, 2.4 4WD** 05/03 - 93 -177 kW		**19-165349**	with standard chassis HA: 06/03 ->
MITSUBISHI OUTLANDER II (CW_)				
B4	**2.0, 2.0 DI-D, 2.2 DI-D, 2.2 DI-D 4WD, 2.4, 2.4 Mivec, 3.0 4x4** 11/06 - 103 -177 kW	i.V. i.V.	**19-172682**	
MITSUBISHI PAJERO I (L04_G, L14_G)				
B4	**2.0 4x4, 2.0 Turbo 4x4, 2.3 D, 2.5 TD, 2.5 TD 4x4, 2.6 4x4, 3.0 i 4x4** 01/83 - 05/91 62 -107 kW	**19-028705**	*19-028712*	with leaf-spring suspension
B4	**3.0 V6** 11/88 - 11/90 104 kW	**19-028705**		with coil-spring suspension
B6 Offroad	**2.0 4x4, 2.0 Turbo 4x4, 2.3 D, 2.5 TD, 2.5 TD 4x4, 2.6 4x4, 3.0 i 4x4** 01/83 - 05/91 62 -107 kW	**24-013321**	**24-013338**	with leaf-spring suspension
B6 Offroad	**3.0 V6** 11/88 - 11/90 104 kW	**24-013369**	**24-013376**	with coil-spring suspension
MITSUBISHI PAJERO I Open Off-Road Vehicle (L04_G)				
B4	**2.3 TD, 2.5 TD, 2.6** 12/82 - 11/90 62 -76 kW	**19-028705**	*19-028712*	with leaf-spring suspension
MITSUBISHI PAJERO II (V2_W, V4_W)				
B3	**2.4** 04/91 - 04/00 82 kW		**36-219544**	with standard chassis; Number of Doors: 3
B3	**2.4** 04/91 - 04/00 82 kW		**36-219551**	with standard chassis; Heavy Duty Version .; Number of Doors: 3

M

MITSUBISHI				
MITSUBISHI PAJERO II (V2_W, V4_W)				
B3	**2.4, 2.5 TD, 2.8 TD** 12/90 - 04/00 73 -92 kW		**36-201556**	with standard chassis; Number of Doors: 5
B3	**2.4** 04/91 - 04/00 82 kW		**36-201877**	with standard chassis; Heavy Duty Version .; Number of Doors: 5
B3	**3.0 V6, 3.0 V6 24V, 3.5 V6 24V** 12/90 - 04/00 110 -153 kW		**36-219551**	with standard chassis; Number of Doors: 3
B3	**3.0 V6, 3.0 V6 24V, 3.5 V6 24V** 12/90 - 04/00 110 -153 kW		**36-201877**	with standard chassis; Number of Doors: 5
B3	**2.5 TD** 12/90 - 10/93 73 kW		**36-219544**	with standard chassis; Number of Doors: 3
B3	**2.5 TD** 12/90 - 10/93 73 kW		**36-219551**	with standard chassis; Heavy Duty Version .; Number of Doors: 3
B3	**2.5 TD** 11/93 - 04/95 73 kW		**36-219568**	with standard chassis; Number of Doors: 3
B3	**2.5 TD** 05/95 - 04/00 73 kW		**36-219575**	with standard chassis; Number of Doors: 3
B3	**2.5 TD, 2.8 TD** 12/90 - 04/00 73 -92 kW		**36-201877**	with standard chassis; Heavy Duty Version .; Number of Doors: 5
B3	**2.8 TD** 06/94 - 04/95 92 kW		**36-219568**	with standard chassis; Number of Doors: 3
B3	**2.8 TD** 05/95 - 05/96 92 kW		**36-219575**	with standard chassis; Number of Doors: 3
B3	**2.8 TD** 06/96 - 04/00 92 kW		**36-219544**	with standard chassis; Number of Doors: 3
B3	**2.8 TD** 06/96 - 04/00 92 kW		**36-219551**	with standard chassis; Heavy Duty Version .; Number of Doors: 3
B4	**1.8 GDi All-wheel Drive, 2.4, 2.5 TD, 2.5 TDiC 2WD, 2.6 4x4, 2.6 4x4, 2.8 D All-wheel Drive, 2.8 TD, 3.0 V6, 3.0 V6 24V, 3.5 V6 24V** 06/94 - 04/00 71 -153 kW	**19-028736**	**19-028743**	with standard chassis; without electronic suspension control
B6 Offroad	**1.8 GDi All-wheel Drive, 2.4, 2.5 TD, 2.5 TDiC 2WD, 2.6 4x4, 2.6 4x4, 2.8 D All-wheel Drive, 2.8 TD, 3.0 V6, 3.0 V6 24V, 3.5 V6 24V** 06/94 - 04/00 71 -153 kW	**24-017947**	**24-017954**	without electronic suspension control
MITSUBISHI PAJERO II Open Off-Road Vehicle (V2_W, V4_W)				
B4	**1.8 GDI, 2.4, 2.5 TD, 2.5 TDiC 2WD, 3.0 V6, 3.0 V6 24V** 06/94 - 04/00 73 -133 kW	**19-028736**	**19-028743**	with standard chassis
B6 Offroad	**1.8 GDI, 2.4, 2.5 TD, 2.5 TDiC 2WD, 3.0 V6, 3.0 V6 24V** 06/94 - 04/00 73 -133 kW	**24-017947**	**24-017954**	without electronic suspension control
MITSUBISHI PAJERO III (V60, V70)				
B4	**2.4, 2.4 4x4, 2.5 TDi, 2.8 TD 4x4, 3.0, 3.2 D 4WD, 3.2 DI-D, 3.5 i 4x4, 3.5 V6 GDI, 3.8 i 4x4** 04/00 - 10/06 73 -149 kW	**19-142241**	**19-142258**	

M

MITSUBISHI				
MITSUBISHI PAJERO III (V60, V70)				
B6 Offroad	**2.4, 2.4 4x4, 2.5 TDi, 2.8 TD 4x4, 3.0, 3.2 D 4WD, 3.2 DI-D, 3.5 i 4x4, 3.5 V6 GDI, 3.8 i 4x4** 04/00 - 10/06 73 -149 kW	**24-062718**	**24-062725**	
MITSUBISHI PAJERO CLASSIC (V2_W)				
B4	**2.5 TD, 3.0 4x4, 3.0 ZR 4x4, 3.2 DI-D 4WD, 3.2 DiD 4x4, 3.8 4x4, 3.8 GDi, 3.8 GDi 4x4** 06/02 - 85 -184 kW	**19-028736**	**19-028743**	with standard chassis; without electronic suspension control
B6 Offroad	**2.5 TD, 3.0 4x4, 3.0 ZR 4x4, 3.2 DI-D 4WD, 3.2 DiD 4x4, 3.8 4x4, 3.8 GDi, 3.8 GDi 4x4** 06/02 - 85 -184 kW	**24-017947**	**24-017954**	without electronic suspension control
MITSUBISHI PAJERO PININ (H6_W, H7_W)				
B3	**2.0 GDI** 10/00 - 95 kW	**36-219001**	36-219018	with standard chassis; Number of Doors: 3
B3	**2.0 GDI** 10/00 - 95 kW	**36-215911**	**36-219025**	with standard chassis; Number of Doors: 5
MITSUBISHI PAJERO SPORT (K90)				
B3	**2.5 TD, 3.0 V6** 11/98 - 73 -130 kW		**36-218226**	with standard chassis; rim: 15"; rim: 16"
B4	**2.4 2WD, 2.5 TD, 2.8 TDi, 2.8 TDi LE 4x4, 3.0 V6, 3.2 TDi LE 4x4, 3.5, 3.8 Gdi 4x4** 11/98 - 73 -171 kW	**19-142128**	**19-142135**	
B6 Offroad	**2.4 2WD, 2.5 TD, 2.8 TDi, 2.8 TDi LE 4x4, 3.0 V6, 3.2 TDi LE 4x4, 3.5, 3.8 Gdi 4x4** 11/98 - 73 -171 kW	**24-017947**	**24-064255**	
MITSUBISHI PAJERO IV (V80, V90)				
B4	**3.2 DI-D, 3.2 TD 4x4, 3.8 i 4x4, 3.8 V6** 02/07 - 118 -184 kW	**19-173177**	**19-184142**	with standard chassis
B6 Sport	**3.2 DI-D, 3.2 TD 4x4, 3.8 i 4x4, 3.8 V6** 02/07 - 118 -184 kW	**24-151368**	**24-151375**	with standard chassis
MITSUBISHI SANTAMO				
B4	**2.0 16V, 2.0 16V 4x4** 05/99 - 102 kW	*22-047823*	*19-063447*	
MITSUBISHI SPACE GEAR (PA/B/D_V/W)				
B4	**2.4 i 4x4, 2.5 TD 4x4** 05/95 - 05/00 73 -97 kW	**19-214252**	**19-214269**	with standard chassis HA: with leaf-spring suspension
B4	**2.4 i 4x4, 2.5 TD 4x4** 05/95 - 05/00 73 -97 kW	**19-214252**	**19-214276**	with standard chassis HA: with coil-spring suspension
B6 Sport	**2.4 i 4x4, 2.5 TD 4x4** 05/95 - 05/00 73 -97 kW	**24-021098**	**24-021104**	without ride height adjustment
B6 Sport	**2.4 i 4x4, 2.5 TD 4x4** 05/95 - 05/00 73 -97 kW	**24-021098**	**24-021111**	with ride height adjustment

MITSUBISHI				
MITSUBISHI SPACE WAGON (N3_W, N4_W)				
B4	**1.8** 10/91 - 10/98 90 kW	*22-047823*	*19-063447*	
B4	**1.8 4x4** 10/91 - 10/98 90 kW		*19-063447*	
B4	**2.0 GLXi, 2.4** 10/91 - 10/98 88 -98 kW	*22-047823*	*19-063447*	
B4	**2.0 GLXi 4x4, 2.4 4x4** 10/91 - 10/98 86 -98 kW		*19-063447*	
B4	**1.8 TD, 2.0 TD GLX, 2.4 i** 10/91 - 10/98 55 -102 kW	*22-047823*	*19-063447*	
MITSUBISHI SPACE WAGON (N5_W)				
B4	**2.0 GDI, 2.4 GDI, 2.4 GDI 4x4** 10/98 - 98 -110 kW	i.V. i.V.	**19-212647**	with standard chassis
MITSUBISHI SPACE RUNNER (N1_W, N2_W)				
B4	**1.8, 2.0 16V, 2.0 TD GLX** 10/92 - 08/99 60 -98 kW	*22-047823*	*19-063447*	VA: with Coil Spring Axle
B4	**1.8 4x4** 10/91 - 08/99 85 -90 kW		*19-063447*	
MITSUBISHI SPACE STAR (DG0)				
B3	**1.3 16V** 06/00 - 03/01 60 -63 kW	**36-213207**	**36-213184**	with standard chassis
B3	**1.3 16V** 04/01 - 12/04 60 -63 kW	**36-213214**	**36-213184**	with standard chassis
B3	**1.3 16V** 06/98 - 05/00 61 -63 kW	**36-213177**	**36-213184**	with standard chassis
B3	**1.3 16V** 06/98 - 63 kW	**36-213177**	**36-213191**	with standard chassis
B3	**1.6 16V, 1.8 GDI** 04/01 - 12/04 72 -82 kW	**36-213207**	**36-213184**	with standard chassis; manual transmission
B3	**1.6 16V, 1.8 GDI** 04/01 - 12/04 72 -82 kW	**36-213214**	**36-213184**	with standard chassis; automatic transmission
B3	**1.8 GDI** 06/98 - 11/98 87 -90 kW	**36-213221**	**36-213191**	with standard chassis; manual transmission
B3	**1.8 GDI** 11/98 - 05/00 87 -90 kW	**36-213221**	**36-213184**	with standard chassis; manual transmission
B3	**1.8 GDI** 06/00 - 03/01 87 -90 kW	**36-213238**	**36-213184**	with standard chassis; manual transmission
B3	**1.8 GDI** 04/01 - 08/02 87 -90 kW	**36-213214**	**36-213184**	with standard chassis; manual transmission
B3	**1.8 GDI** 09/02 - 12/04 87 -90 kW	**36-213207**	**36-213184**	with standard chassis; manual transmission
B3	**1.8 GDI** 06/00 - 03/01 87 -90 kW	**36-213207**	**36-213184**	with standard chassis; automatic transmission
B3	**1.8 GDI** 04/01 - 08/02 87 -90 kW	**36-213238**	**36-213184**	with standard chassis; automatic transmission

M

MITSUBISHI				
MITSUBISHI SPACE STAR (DG0)				
B3	**1.8 GDI** 09/02 - 12/04 87 -90 kW	**36-213214**	**36-213184**	with standard chassis; automatic transmission
B3	**1.9 DI-D** 02/01 - 12/04 75 -85 kW	**36-213252**	**36-213184**	with standard chassis
B4	**1.3 16V** 06/98 - 60 -63 kW		**19-061283**	with standard chassis
MITSUBISHI 3000 GT (Z16A)				
B6 Sport	**3.0 i 24V 4x4** 06/92 - 08/99 210 kW	**34-050224**	**24-017428**	the electronics from TEMS must be shut off; with electronic suspension control VA: Without roadworthy certificate
B6 Sport	**3.0 i 24V 4x4** 06/92 - 08/99 210 kW	**34-050224**	**24-017435**	without electronic suspension control VA: Without roadworthy certificate
MITSUBISHI L 300 Bus (LO3_P/G, L0_2P)				
B4	**1.6, 1.8, 2.0 DL, 2.3 D** 05/80 - 02/87 48 -66 kW		**19-028477**	with standard chassis
B6 Sport	**1.8 4x4, 2.0 4x4** 08/84 - 02/87 60 -65 kW	**24-013369**	**24-004244**	
B6 Sport	**1.8 4x4, 2.0 4x4** 08/84 - 02/87 60 -65 kW	**24-013321**	**24-013338**	firmer setting
MITSUBISHI L 300 Box (L03_P)				
B4	**1.6, 1.8, 2.0 DL, 2.3 D** 02/80 - 10/86 48 -66 kW		**19-028477**	with standard chassis
MITSUBISHI L 300 Bus (P0_W, P1_W, P2_W)				
B6 Sport	**2.0 4WD, 2.0 4x4, 2.4 GLX 4x4, 3.0 4x4** 11/86 - 65 -136 kW	**24-013321**	**24-014670**	
B6 Sport	**2.0 4WD, 2.4 4WD, 2.5 TD 4WD** 11/86 - 64 -82 kW	**24-013321**	**24-014670**	
B6 Sport	**2.4 4WD** 11/86 - 12/90 80 kW	**24-013369**	**24-004244**	
B6 Sport	**2.4 4WD** 11/86 - 12/90 80 kW	**24-013321**	**24-013338**	firmer setting
MITSUBISHI L 300 Box (P0_W, P1_W)				
B6 Sport	**2.4 4x4, 3.0 4x4** 11/86 - 05/03 82 -136 kW	**24-013321**	**24-014670**	
MITSUBISHI L 300 Flatbed / Chassis (P1_T)				
B4	**2.0, 2.5 D** 07/94 - 64 -85 kW		**19-028477**	with standard chassis
MOSKVICH				
MOSKVICH 423 Estate				
B4	**1.4** 08/59 - 33 kW		*19-028712*	

M

MOSKVICH				
MOSKVICH 21412				
B4	**1.5** 05/89 - 51 kW	**21-031519**	**19-067834**	
NISSAN				
NISSAN 100 NX (B13)				
B3	**1.6** 03/90 - 10/94 66 kW	**36-154869**		with standard chassis; manual transmission
B3	**1.6** 03/90 - 10/94 66 kW	**36-219858**		with standard chassis; automatic transmission
B3	**1.6 SR** 09/93 - 01/94 75 kW	**36-219858**		with standard chassis; manual transmission
B3	**1.6 SR** 09/93 - 01/94 75 kW	**36-219865**		with standard chassis; automatic transmission
B3	**1.6 SR** 02/94 - 10/94 75 kW	**36-200917**		with standard chassis
B3	**2.0 GTI** 03/91 - 10/94 105 kW	**36-219858**		with standard chassis
B4	**1.6, 1.6 SR** 03/90 - 02/94 66 -75 kW	*22-047946* *22-047953*	*22-049216*	without ABS
B4	**1.6, 1.6 SR** 03/94 - 10/94 66 -75 kW	*22-047946* *22-047953*	*22-049179* *22-049186*	without ABS
B4	**1.6, 1.6 SR** 03/90 - 10/94 66 -75 kW	*22-047946* *22-047953*		with ABS
B4	**2.0 GTI** 03/91 - 10/94 105 kW	*22-047946* *22-047953*		
NISSAN 200 SX (S13)				
B6 Sport	**1.8, 1.8 Turbo, 2.0 i 16V** 07/88 - 03/94 99 -124 kW	**34-050231**	**24-017442**	
NISSAN 200 SX (S14)				
B6 Sport	**2.0 i 16V, 2.0 i 16V Turbo** 10/93 - 12/99 118 -147 kW		**24-019163**	
NISSAN 280 ZX,ZXT (HGS130)				
B6 Sport	**2.8** 10/78 - 06/83 103 -110 kW		**24-000574**	
NISSAN 300 ZX (Z31)				
B6 Sport	**3.0** 01/84 - 12/87 125 kW	**34-002643**	**24-011167**	for bolted struts only
B6 Sport	**3.0 Turbo** 04/84 - 10/90 149 -168 kW		**24-000628**	
B6 Sport	**3.0 Turbo** 04/84 - 09/85 168 kW	**34-002629**	**24-000628**	
NISSAN 300 ZX (Z32)				
B6 Sport	**3.0 Twin Turbo** 05/90 - 09/95 197 -208 kW	**24-014816** **24-014823**		with double wishbone axle

M
N

NISSAN

NISSAN 300 ZX (Z32)

NISSAN 350 Z (Z33)

B6 Sport	**3.5** 10/03 - 206 -230 kW	**24-118927** **24-118934**	**24-118941**	
B8	**3.5** 10/03 - 206 -230 kW	**24-101561** **24-101578**	**24-101585**	
B12 PK	**3.5** 10/03 - 206 -230 kW	**46-190529**		Conditions see certificates VA: lowering (expertise): 30 mm; axle load to: 975 kg HA: lowering (expertise): 30 mm; axle load to: 975 kg
B14	**3.5** 10/03 - 206 -230 kW	**47-101623**		Conditions see certificates VA: lowering (expertise): 35-45 mm; axle load to: 975 kg HA: lowering (expertise): 35-45 mm; axle load to: 975 kg
B16 PSS10	**3.5** 10/03 - 206 -230 kW	**48-146142**		Conditions see certificates VA: lowering (expertise): 35-45 mm; axle load to: 975 kg HA: lowering (expertise): 35-45 mm; axle load to: 975 kg

NISSAN 350 Z Roadster (Z33)

B6 Sport	**3.5** 03/05 - 206 -230 kW	**24-118927** **24-118934**	**24-118941**	
B8	**3.5** 03/05 - 206 -230 kW	**24-101561** **24-101578**	**24-101585**	
B12 PK	**3.5** 03/05 - 206 -230 kW	**46-190529**		Conditions see certificates VA: lowering (expertise): 30 mm; axle load to: 975 kg HA: lowering (expertise): 30 mm; axle load to: 975 kg
B14	**3.5** 03/05 - 206 -230 kW	**47-101623**		Conditions see certificates VA: lowering (expertise): 35-45 mm; axle load to: 975 kg HA: lowering (expertise): 35-45 mm; axle load to: 975 kg
B16 PSS10	**3.5** 03/05 - 206 -230 kW	**48-146142**		Conditions see certificates VA: lowering (expertise): 35-45 mm; axle load to: 975 kg HA: lowering (expertise): 35-45 mm; axle load to: 975 kg

NISSAN 370 Z (Z34)

B16 PSS10	**3.7** 06/09 - 241 -243 kW	**48-165815**		Conditions see certificates VA: lowering (expertise): 25-40 mm; axle load to: 980 kg HA: lowering (expertise): 0-40 mm; axle load to: 1000 kg

NISSAN 370 Z Roadster (Z34)

B16 PSS10	**3.7** 01/10 - 241 -243 kW	**48-165815**		Conditions see certificates VA: lowering (expertise): 25-40 mm; axle load to: 980 kg HA: lowering (expertise): 0-40 mm; axle load to: 1000 kg

NISSAN ALMERA I Hatchback (N15)

B3	**1.4, 1.4 S,GX,LX** 09/95 - 08/97 55 -64 kW	**36-200917**	**36-200658**	with standard chassis
B3	**1.4, 1.4 S,GX,LX** 09/97 - 01/99 55 -64 kW	**36-215218**	**36-200573**	with standard chassis
B3	**1.4, 1.4 S,GX,LX** 02/99 - 03/00 55 -64 kW	**36-201211**	**36-200573**	with standard chassis
B3	**1.6, 1.6 SR,SLX** 07/95 - 08/97 66 -86 kW	**36-201679**	**36-200627**	with standard chassis; mark: SR; manual transmission
B3	**1.6, 1.6 SR,SLX** 09/97 - 01/99 66 -86 kW	**36-201211**	**36-215676**	with standard chassis; mark: SR; manual transmission
B3	**1.6, 1.6 SR,SLX** 02/99 - 03/00 66 -86 kW	**36-215638**	**36-215676**	with standard chassis; mark: SR; manual transmission
B3	**1.6, 1.6 SR,SLX** 07/95 - 08/97 66 -86 kW	**36-201679**	**36-200658**	with standard chassis; mark: SLX / GX; manual transmission

N

NISSAN				
NISSAN ALMERA I Hatchback (N15)				
B3	**1.6, 1.6 SR,SLX** 09/97 - 01/99 66 -86 kW	**36-201211**	**36-200573**	with standard chassis; mark: SLX / GX; manual transmission
B3	**1.6, 1.6 SR,SLX** 02/99 - 03/00 66 -86 kW	36-215638	**36-200573**	with standard chassis; mark: SLX / GX; manual transmission
B3	**1.6, 1.6 SR,SLX** 07/95 - 08/97 66 -86 kW	**36-201433**	**36-200658**	with standard chassis; automatic transmission
B3	**1.6, 1.6 SR,SLX** 09/97 - 04/00 66 -86 kW	36-215638	**36-200573**	with standard chassis; automatic transmission
B3	**2.0 D** 11/95 - 08/97 55 kW	36-215638	36-215652	with standard chassis
B3	**2.0 D** 09/97 - 03/00 55 kW	**36-201433**	36-215669	with standard chassis
B4	**1.4, 1.4 S,GX,LX, 1.5** 07/95 - 07/97 55 -77 kW	*22-047960* *22-047977*	*19-063478*	with ABS
B4	**1.4, 1.4 S,GX,LX, 1.5** 08/97 - 03/00 55 -77 kW		*19-063485*	with ABS
B4	**1.6, 1.6 SR,SLX** 09/95 - 07/97 66 -73 kW	*22-047960* *22-047977*	*19-063478*	with ABS
B4	**1.6, 1.6 SR,SLX** 07/97 - 03/00 66 -73 kW		*19-063485*	with ABS
B4	**2.0 GTi** 07/96 - 07/97 105 kW	*22-047960* *22-047977*	*19-063478*	with ABS
B4	**2.0 GTi** 08/97 - 03/00 105 kW		*19-063485*	with ABS
B4	**2.0 D** 11/95 - 07/97 55 kW	*22-047960* *22-047977*	*19-063478*	with ABS
B4	**2.0 D** 08/97 - 03/00 55 kW		*19-063485*	with ABS
NISSAN ALMERA I (N15)				
B3	**1.4 GX,LX** 09/95 - 01/98 55 kW	**36-201211**	**36-201419**	with standard chassis
B3	**1.4 GX,LX** 02/98 - 07/00 55 kW	**36-201211**	36-215676	with standard chassis
B3	**1.4** 09/95 - 08/97 64 kW	**36-200917**		with standard chassis
B3	**1.4** 09/97 - 01/99 64 kW	**36-215218**		with standard chassis
B3	**1.4** 02/99 - 07/00 64 kW	**36-201211**	36-215669	with standard chassis
B3	**1.6, 1.6 SLX** 07/95 - 08/97 66 -75 kW	**36-201679**	**36-200627**	with standard chassis
B3	**1.6, 1.6 SLX** 09/97 - 01/99 66 -75 kW	**36-201211**	36-215676	with standard chassis
B3	**1.6, 1.6 SLX** 02/99 - 07/00 66 -75 kW	36-215638	36-215676	with standard chassis
B3	**2.0 D** 11/95 - 08/97 55 kW	36-215645	36-215652	with standard chassis

N

NISSAN				
NISSAN ALMERA I (N15)				
B3	**2.0 D** 09/97 - 07/00 55 kW	36-215645	36-215652	with standard chassis
B4	**1.4, 1.4 GX,LX, 1.5** 07/95 - 07/97 55 -77 kW	*22-047960* *22-047977*	*19-063478*	with ABS
B4	**1.4, 1.4 GX,LX, 1.5** 08/97 - 07/00 55 -77 kW		*19-063485*	with ABS
B4	**1.6, 1.6 SLX** 09/95 - 07/97 66 -73 kW	*22-047960* *22-047977*	*19-063478*	with ABS
B4	**1.6, 1.6 SLX** 08/97 - 07/00 66 -73 kW		*19-063485*	with ABS
B4	**1.8, 2.0 D** 07/95 - 07/97 55 -84 kW	*22-047960* *22-047977*	*19-063478*	with ABS
B4	**1.8, 2.0 D** 08/97 - 07/00 55 -84 kW		*19-063485*	with ABS
NISSAN ALMERA II Hatchback (N16)				
B1	**1.5, 1.5 dCi, 1.8, 2.0, 2.2 dCi, 2.2 Di** 03/00 - 60 -107 kW		**12-226368**	
B3	**1.5, 1.5 dCi, 1.5 XL, 1.6** 07/00 - 12/06 60 -83 kW		**36-213306**	with standard chassis
B3	**1.8, 2.0** 01/00 - 12/06 84 -107 kW	**36-200450**	**36-200658**	with standard chassis; Vehicle Production Country: Great Britain
B3	**2.2 dCi, 2.2 Di** 03/00 - 12/06 81 -100 kW	**36-200306**	**36-200658**	with standard chassis; Vehicle Production Country: Great Britain
NISSAN ALMERA II (N16)				
B1	**1.5, 1.8, 2.0, 2.2 Di** 07/00 - 66 -107 kW		**12-226368**	
B3	**1.5, 1.5 XL, 1.6** 07/00 - 66 -83 kW	**36-201426**	**36-213290**	with standard chassis; Vehicle Production Country: Japan
B3	**1.5 XL, 1.6** 07/00 - 12/06 77 -83 kW	**36-199952**	**36-200658**	with standard chassis; Vehicle Production Country: Great Britain
B3	**1.8, 2.0** 07/00 - 84 -107 kW	**36-201426**	**36-213290**	with standard chassis; manual transmission; Vehicle Production Country: Japan
B3	**1.8** 07/00 - 03/01 84 kW		**36-213290**	with standard chassis; automatic transmission; Vehicle Production Country: Japan
B3	**1.8, 2.0** 07/00 - 12/06 84 -107 kW	**36-200450**	**36-200658**	with standard chassis; Vehicle Production Country: Great Britain
B3	**1.5 dCi** 01/03 - 12/06 60 kW		**36-213306**	with standard chassis; Vehicle Production Country: Great Britain
B3	**2.2 Di** 07/00 - CH-Nr. 81 kW	**36-213276**	**36-213290**	-> CH.Nr.: 200103; with standard chassis; equipment: LX
B3	**2.2 Di** 07/00 - 03/01 81 kW	**36-213276**	**36-200566**	with standard chassis; equipment: GX
B3	**2.2 Di** 04/01 - 81 kW	**36-200306**	**36-200658**	with standard chassis
B3	**2.2 dCi** 09/03 - 12/06 82 -100 kW	**36-200306**	**36-200658**	with standard chassis; Vehicle Production Country: Great Britain

N

NISSAN

NISSAN ALMERA II (N16)

NISSAN ALMERA TINO (V10)

B1	**1.8, 2.0, 2.2 dCi, 2.2 Di** 08/00 - 82 -100 kW		**12-226368**	
B3	**1.8** 08/00 - 84 -85 kW	**36-200702**	**36-213269**	with standard chassis
B3	**2.0** 08/00 - 100 kW	**36-199938**	**36-213269**	with standard chassis
B3	**2.2 dCi, 2.2 Di** 08/00 - 82 -100 kW	**36-199938**	**36-213269**	with standard chassis

NISSAN AVENIR

B6 Sport	**2.0, 2.0 TD** 06/86 - 10/97 49 -77 kW	*34-050453*	*24-023429*	mark: PNW10

NISSAN BLUEBIRD (910)

B6 Sport	**1.8, 2.0 i** 01/80 - 12/83 65 -80 kW		**24-000574**	

NISSAN CEDRIC (Y30)

B6 Sport	**2.0, 2.0 GL, 3.0** 10/83 - 08/87 75 -132 kW	*34-002636*		mark: Y30

NISSAN CEDRIC

B6 Sport	**2.0, 2.8 D, 3.0** 09/87 - 05/91 67 -143 kW	*34-002681*	**24-012171**	mark: Y31

NISSAN CEDRIC

B6 Sport	**2.0 SGL, 2.8 D, 2.8 TD, 3.0** 06/91 - 10/97 69 -118 kW	**34-030103**	**24-017503**	mark: Y32

NISSAN GLORIA

B6 Sport	**3.0, 3.0 Hardtop, 3.0 Turbo Hardtop** 10/83 - 08/87 109 -169 kW	*34-002636*		mark: Y30

NISSAN GLORIA

B6 Sport	**2.0 Hardtop, 2.0 Turbo Hardtop, 3.0 Brougham Vip Hardtop, 3.0 Hardtop** 09/87 - 08/04 92 -143 kW	*34-002681*	**24-012171**	mark: Y31

NISSAN GLORIA

B6 Sport	**2.0 SGL, 2.8 TD, 3.0, 3.0 24V** 06/91 - 10/97 69 -187 kW	*34-002681*	**24-012171**	mark: Y31

NISSAN GLORIA

B6 Sport	**2.4, 2.5, 3.0, 3.0 SV** 11/95 - 04/99 127 -198 kW	*34-002681*	**24-012171**	mark: Y31

NISSAN GT-R (R35)

B4 DTC	**3.8 V6, 3.8 V6 4WD** 02/09 - 357 -390 kW	**24-193238** VL **24-193245** VL	**24-193221** VL	with electronic suspension control

N

NISSAN				
NISSAN KUBISTAR (X76)				
B3	**1.2** 08/03 - 44 kW	**36-198337**		with standard chassis; without AC
B3	**1.2** 08/03 - 44 kW	**36-212583**		with standard chassis; with AC
B3	**1.2 16V** 04/06 - 55 kW	**36-212583**		with standard chassis; without AC
B3	**1.2 16V** 04/06 - 55 kW	**36-217229**		with standard chassis; with AC
B3	**1.6 16V** 08/03 - 70 kW	**36-217366**		with standard chassis; without AC
B3	**1.6 16V** 08/03 - 70 kW	36-217373		with standard chassis; with AC
B3	**1.5 dCi, 1.5 dCi 70, 1.5 dCi 85** 08/03 - 42 -62 kW	**36-217236**		with standard chassis; without AC
B3	**1.5 dCi, 1.5 dCi 70, 1.5 dCi 85** 08/03 - 42 -62 kW	**36-217366**		with standard chassis; with AC
NISSAN LAUREL (JC31)				
B6 Sport	**2.8 D** 01/81 - 10/85 62 kW		**24-000574**	
NISSAN LAUREL (JC32)				
B6 Sport	**2.4, 2.8 D** 01/85 - 12/89 62 -94 kW		**24-001984**	
NISSAN MAXIMA (J30)				
B4	**3.0 i** 10/88 - 06/94 125 kW		*21-031441*	with ABS
NISSAN MAXIMA QX (A32)				
B3	**2.0, 3.0** 01/95 - 02/98 103 -142 kW	36-222438	**36-201228**	with standard chassis; manual transmission
B3	**2.0, 3.0** 03/98 - 08/00 103 -142 kW	36-216314	**36-201228**	with standard chassis; manual transmission
B3	**2.0, 3.0** 01/95 - 08/00 103 -142 kW	i.V.	**36-201228**	with standard chassis; automatic transmission
NISSAN MAXIMA QX (A33)				
B3	**2.0 V6 24V, 3.0 V6 24V** 03/00 - 103 -147 kW		**36-198313**	with standard chassis
B4	**2.0 V6 24V** 03/00 - 07/00 103 kW	i.V. i.V.	**19-197791**	with standard chassis
B4	**2.0 V6 24V, 3.0 V6 24V** 08/00 - 103 -147 kW	22-167026 22-167033	**19-167046**	with standard chassis
NISSAN MICRA (K10)				
B3	**1.0, 1.2** 12/82 - 07/92 37 -44 kW	**36-163717**	**36-163700**	with standard chassis

N

NISSAN				
NISSAN MICRA (K10)				
B4	**1.0, 1.2** 12/82 - 07/92 37 -44 kW	*22-047885* *22-047892* **11-101918** SP	*19-019352*	
NISSAN MICRA (K11)				
B3	**1.0, 1.0 i 16V** 01/92 - 02/03 40 -44 kW	**36-163694**	**36-163656**	with standard chassis; Number of Doors: 3
B3	**1.0, 1.0 i 16V** 01/92 - 02/03 40 -44 kW	**36-163694**	**36-163649**	with standard chassis; Number of Doors: 5
B3	**1.0, 1.0 i 16V, 1.3 i 16V, 1.5 D** 01/92 - 02/03 40 -55 kW	**36-163663**		with standard chassis; Heavy Duty Version .
B3	**1.3 i 16V** 08/92 - 09/00 55 kW	**36-163687**	**36-163656**	with standard chassis; Number of Doors: 3
B3	**1.3 i 16V** 08/92 - 09/00 55 kW	**36-163687**	**36-163649**	with standard chassis; Number of Doors: 5
B3	**1.5 D** 02/98 - 02/03 42 kW	**36-163670**	**36-163656**	with standard chassis; Number of Doors: 3
B3	**1.5 D** 02/98 - 02/03 42 kW	**36-163670**	**36-163649**	with standard chassis; Number of Doors: 5
B4	**1.0, 1.0 i 16V, 1.3 i 16V** 01/92 - 09/00 40 -55 kW	**22-044822** **22-044815**	**19-028569**	
B4	**1.0 i 16V, 1.4 i 16V** 09/00 - 02/03 44 -60 kW		**19-028569**	
B4	**1.5 D** 02/98 - 07/00 42 kW	**22-044822** **22-044815**	**19-028569**	
B4	**1.5 D** 08/00 - 02/03 42 kW		**19-028569**	
MS	**1.0, 1.0 i 16V, 1.3 i 16V, 1.4 i 16V, 1.5 D** 01/92 - 02/03 40 -60 kW		**24-024693**	
NISSAN MICRA (K12)				
B1	**1.0 16V, 1.2 16V, 1.4 16V, 1.5 dCi** 01/03 - 48 -65 kW	**12-224364** **12-224357**		VA: with ball bearing
B3	**1.0 16V** 01/03 - 48 kW	**36-198108**	**36-198054**	with standard chassis
B3	**1.2 16V, 1.4 16V** 01/03 - 48 -65 kW	**36-198108**	**36-198054**	with standard chassis; manual transmission
B3	**1.2 16V, 1.4 16V** 01/03 - 48 -65 kW	**36-198085**	**36-198054**	with standard chassis; automatic transmission
B3	**160 SR** 05/05 - 81 kW	**36-198085**	**36-198054**	with standard chassis
B3	**1.5 dCi** 01/03 - 48 -63 kW	**36-198092**	**36-198054**	with standard chassis
B4	**1.0 16V, 1.2 16V, 1.4 16V, 1.5 dCi** 01/03 - 48 -65 kW	**22-166746** **22-166753**	**19-158198**	

N

NISSAN

NISSAN MICRA C+C (K12)

B3	**1.4 16V, 1.6 160 SR** 08/05 - 65 -81 kW	**36-198092**	36-198122	with standard chassis

NISSAN NAVARA (D40)

B4	**2.5 dCi, 2.5 dCi 4WD, 2.8 D, 4.0 4WD, 4.0 D** 10/04 - 101 -198 kW	**19-172903**	**19-172910**	without electronic suspension control
B6 Offroad	**2.5 dCi, 2.5 dCi 4WD, 2.8 D, 4.0 4WD, 4.0 D** 10/04 - 101 -198 kW	**24-140874**	**24-144384**	without electronic suspension control

NISSAN NAVARA Flatbed / Chassis (D40)

B4	**2.5 dCi 4WD** 08/08 - 106 -126 kW	**19-172903**	**19-172910**	without electronic suspension control
B6 Offroad	**2.5 dCi 4WD** 08/08 - 106 -126 kW	**24-140874**	**24-144384**	without electronic suspension control

NISSAN NOTE (E11)

B3	**1.4** 03/06 - 65 kW	**36-300051**	**36-300068**	with standard chassis
B3	**1.6** 03/06 - 81 kW	**36-148080**	**36-300068**	with standard chassis
B3	**1.5 dCi** 03/06 - 50 -76 kW	**36-160167**	**36-300068**	with standard chassis
B4	**1.4, 1.5 dCi, 1.6** 03/06 - 50 -81 kW	**22-165770** **22-165787**	**19-164588**	
B6 Sport	**1.4, 1.5 dCi, 1.6** 03/06 - 50 -81 kW	**35-128625**	**24-128636**	VA: Only in connection with Renault 8200421993; Only in connection with Renault 8200421997
B8	**1.4, 1.5 dCi, 1.6** 03/06 - 50 -81 kW	**35-128649**	**24-128650**	VA: Only in connection with Renault 8200421993; Only in connection with Renault 8200421997

NISSAN PATHFINDER

B6 Offroad	**2.4 All-wheel Drive, 3.0 All-wheel Drive** 07/86 - 10/95 74 -95 kW	**24-012454**	**24-020770**	

NISSAN PATHFINDER

B6 Offroad	**3.0 All-wheel Drive** 12/89 - 07/90 95 kW	**24-012454**	**24-020770**	

NISSAN PATHFINDER (R50)

B3	**3.5 V6 4WD** 11/00 - 12/04 162 kW	36-217021	36-217038	with standard chassis
B3	**2.7 TD 4WD, 3.2 TD 4WD, 3.3 V6 4WD** 09/97 - 09/99 96 -125 kW	36-217014	36-217038	with standard chassis
B3	**2.7 TD 4WD, 3.2 TD 4WD, 3.3 V6 4WD** 10/99 - 12/04 96 -125 kW	36-217021	36-217038	with standard chassis
B6 Offroad	**2.4, 2.7 TD 4WD, 3.2 TD 4WD, 3.3 V6 4WD, 3.5 V6 4WD** 09/97 - 12/04 87 -162 kW	**34-050460**	**24-023450**	VA: for bolted struts only; Without roadworthy certificate

N

NISSAN

NISSAN PATHFINDER (R51)

B4	**2.5 DCi, 2.5 dCi 4WD, 3.0 dCi, 4.0 4WD** 01/05 - 126 -198 kW	**19-167367**	**19-166445**	
B6 Offroad	**2.5 DCi, 2.5 dCi 4WD, 3.0 dCi, 4.0 4WD** 01/05 - 126 -198 kW	**24-140874**	**24-140881**	without electronic suspension control

NISSAN PATROL Station Wagon (W160)

B4	**2.8, 3.2 TD, 3.3 D, 4.0** 06/80 - 08/88 70 -108 kW	*19-020099*	*19-020105*	
B6 Offroad	**2.8, 3.2 TD, 3.3 D, 4.0** 06/80 - 08/88 70 -108 kW	**24-004107**	**24-004206**	

NISSAN PATROL Hardtop (K160)

B4	**2.8, 3.2 TD, 3.3 D** 11/79 - 08/88 70 -89 kW	*19-020099*	*19-020105*	
B6 Offroad	**2.8, 3.2 TD, 3.3 D** 11/79 - 08/88 70 -89 kW	**24-004107**	**24-004206**	

NISSAN PATROL Station Wagon (W260)

B4	**2.8 TD, 3.2 D** 04/89 - 11/95 81 -85 kW	**19-020136**	*19-020143*	

NISSAN PATROL Hardtop (K260)

B4	**2.8, 2.8 TD, 3.2 D, 4.2, 4.2 D** 04/89 - 12/97 81 -129 kW	**19-020136**	*19-020143*	
B6 Offroad	**2.8, 2.8 TD, 3.2 D, 4.2, 4.2 D** 05/86 - 12/97 81 -129 kW	**24-004107**	**24-020770**	with leaf-spring suspension

NISSAN PATROL GR I (Y60)

B4	**2.8 TD, 4.2 CAT, 4.2 D** 09/88 - 06/97 85 -121 kW	**19-020136**	**19-020129**	with coil-spring suspension
B6 Offroad	**2.8 TD, 4.2 CAT, 4.2 D** 09/88 - 06/97 85 -121 kW	**24-012669**	**24-012676**	with coil-spring suspension

NISSAN PATROL GR II (Y61)

B6 Offroad	**2.7 TD 4x4, 2.8 TD, 2.8 TDiC 4x4, 3.0 D, 3.0 DTi, 3.2 D 4x4, 4.2 D, 4.2 D 4x4, 4.2 TD, 4.2 TDi 4x4, 4.5, 4.5 i, 4.8, 4.8 Luxury 4x4** 06/97 - 70 -185 kW	**24-060431**	**24-060448**	

NISSAN PICK UP (D21)

B6 Offroad	**2.3 D 4WD, 2.4 4WD, 2.4 i 12V 4WD, 2.4 i 4WD, 2.5 D 4WD, 2.7 D 4WD, 2.7 TD 4WD, 3.0 i V6 4WD** 09/85 - 02/98 51 -109 kW	**24-010993**	**24-011006**	

NISSAN PICK UP (D22)

B6 Offroad	**2.4 4WD, 2.4 4x4, 2.4 i 4WD, 2.5 D 4WD, 2.5 Di 4WD, 2.5 TD 4WD, 2.7 TD 4WD, 3.0 4WD, 3.0 TD 4WD, 3.2 D 4WD, 3.3 4WD** 09/85 - 61 -125 kW	**24-010993**	**24-011006**	

N

NISSAN

NISSAN PRIMERA Hatchback (P10)

B3	**1.6** 06/90 - 01/96 66 -75 kW		**36-161720**	with standard chassis
B3	**2.0 16V, 2.0 i** 06/90 - 06/96 85 -92 kW	**36-154876**	**36-161720**	with standard chassis
B3	**2.0 D** 01/91 - 01/96 55 kW	**36-154876**	**36-161676**	with standard chassis
B4	**1.6** 06/90 - 01/96 66 -75 kW	**19-028620**	*22-049209*	without ABS
B4	**1.6** 06/90 - 01/96 66 -75 kW	**19-028620**		with ABS
B4	**2.0 16V, 2.0 i** 06/90 - 06/96 85 -92 kW	**19-028620**	*22-049254* *22-049261*	with ABS
B4	**2.0 D** 01/91 - 01/96 55 kW	**19-028620**		with ABS
B4	**2.0 D** 01/91 - 01/96 55 kW	**19-028620**	*22-049209*	without ABS
B6 Sport	**1.6, 2.0 16V, 2.0 D, 2.0 i** 06/90 - 06/96 55 -92 kW	**24-017824**	**34-030110**	HA: for bolted struts only

NISSAN PRIMERA (P10)

B3	**1.6** 06/90 - 01/96 66 -75 kW		**36-154890**	with standard chassis
B3	**2.0, 2.0 16V, 2.0 i** 06/90 - 06/96 85 -105 kW	**36-154876**	**36-161713**	with standard chassis
B3	**2.0 GT** 06/90 - 01/96 110 kW		**36-161690**	with standard chassis
B3	**2.0 D** 01/91 - 01/96 55 kW	**36-154876**	**36-161676**	with standard chassis
B4	**1.6** 06/90 - 01/96 66 -75 kW	**19-028620**	*22-049209*	without ABS
B4	**1.6** 06/90 - 01/96 66 -75 kW	**19-028620**		with ABS
B4	**2.0, 2.0 16V, 2.0 GT, 2.0 i** 06/90 - 06/96 85 -110 kW	**19-028620**	*22-049254* *22-049261*	with ABS
B4	**2.0 D** 01/91 - 01/96 55 kW	**19-028620**		with ABS
B6 Sport	**1.6, 2.0, 2.0 16V, 2.0 D, 2.0 GT, 2.0 i** 06/90 - 06/96 55 -110 kW	**24-017824**	**34-030110**	HA: for bolted struts only

NISSAN PRIMERA Traveller (W10)

B3	**1.6 i** 07/90 - 03/98 66 -75 kW		**36-161720**	with standard chassis
B3	**2.0 i** 07/90 - 03/98 85 kW	**36-154876**	**36-161720**	with standard chassis
B3	**2.0 D** 07/90 - 12/95 55 kW	**36-154876**	**36-161720**	with standard chassis

NISSAN

NISSAN PRIMERA Traveller (W10)

B4	**1.6 i, 2.0 D, 2.0 i** 07/90 - 03/98 55 -85 kW	*22-047922* *22-047939*	*19-028835*	

NISSAN PRIMERA Hatchback (P11)

B3	**1.6 16V** 09/96 - 07/02 66 -78 kW	**36-163632**	**36-163601**	with standard chassis; mark: SLX; mark: SRI
B3	**2.0 16V** 09/96 - 07/02 85 -110 kW	**36-163625**	**36-163601**	with standard chassis; mark: SLX; mark: SRI
B3	**2.0 16V, 2.0 TD** 09/96 - 07/02 66 -110 kW	**36-163618**	**36-163601**	with standard chassis; mark: GT
B4	**1.6 16V, 1.8 16V, 2.0 16V, 2.0 TD** 09/96 - 07/02 66 -110 kW	**19-028620**		Not for Japan; with standard chassis HA: Vehicle Production Country: Great Britain
B6 Sport	**1.6 16V, 1.8 16V, 2.0 16V, 2.0 TD** 09/96 - 07/02 66 -110 kW	**24-017824**	**24-023443**	Only for Japan HA: Vehicle Production Country: Japan

NISSAN PRIMERA (P11)

B3	**1.6 16V** 06/96 - 12/01 66 -78 kW	**36-163632**	**36-154906**	with standard chassis
B3	**2.0 16V** 09/96 - 12/01 85 -110 kW	**36-163625**	**36-154906**	with standard chassis; mark: SLX; mark: SRI
B3	**2.0 16V, 2.0 TD** 09/96 - 12/01 66 -110 kW	**36-163618**	**36-154906**	with standard chassis; mark: GT
B4	**1.6 16V, 1.8 16V, 2.0 16V, 2.0 TD** 06/96 - 12/01 66 -110 kW	**19-028620**		with standard chassis HA: Vehicle Production Country: Great Britain
B6 Sport	**1.6 16V, 1.8 16V, 2.0 16V, 2.0 TD** 06/96 - 12/01 66 -110 kW	**24-017824**	**24-023443**	HA: Vehicle Production Country: Japan

NISSAN PRIMERA Traveller (WP11)

B3	**1.6 16V** 04/98 - 12/01 66 -73 kW	**36-163632**	**36-154913**	with standard chassis
B3	**2.0 16V** 04/98 - 12/01 85 -103 kW	**36-163625**	**36-154913**	with standard chassis; mark: SLX; mark: SRI
B3	**2.0 16V, 2.0 TD** 04/98 - 12/01 66 -103 kW	**36-163618**	**36-154913**	with standard chassis; mark: GT
B4	**1.6 16V, 2.0 16V, 2.0 TD** 04/98 - 12/01 66 -103 kW	**19-028620**	*19-063508*	

NISSAN PRIMERA Hatchback (P12)

B1	**1.6, 1.8, 1.9 dCi, 2.0, 2.2 dCi, 2.2 Di** 07/02 - 78 -103 kW		**12-226368**	
B3	**1.6** 07/02 - 06/04 78 -80 kW	**36-214853**	**36-215201**	with standard chassis
B3	**1.6** 07/04 - 78 -80 kW	**36-200078**	**36-215201**	with standard chassis
B3	**1.8** 07/02 - 06/04 85 kW	**36-216376**	**36-215201**	with standard chassis
B3	**1.8, 1.9 dCi** 07/04 - 85 -88 kW	**36-200078**	**36-215201**	with standard chassis

N

NISSAN

NISSAN PRIMERA Hatchback (P12)

B3	**2.0** 07/04 - 103 kW	**36-200078**	**36-215201**	with standard chassis
B3	**1.9 dCi, 2.0** 07/02 - 06/04 85 -103 kW	**36-212590**	**36-215201**	with standard chassis
B3	**2.2 Di** 07/02 - 06/04 93 kW	**36-216369**	**36-215201**	with standard chassis
B3	**2.2 Di** 07/04 - 93 kW	**36-200283**	**36-215201**	with standard chassis
B4	**1.6, 1.8, 1.9 dCi, 2.0, 2.2 dCi, 2.2 Di** 07/02 - 78 -103 kW	i.V. i.V.	**19-174204**	

NISSAN PRIMERA (P12)

B1	**1.6, 1.8, 1.9 dCi, 2.0, 2.2 dCi, 2.2 Di** 01/02 - 78 -103 kW		**12-226368**	
B3	**1.6** 01/02 - 06/04 78 -80 kW	**36-214853**	**36-215201**	with standard chassis
B3	**1.6** 07/04 - 78 -80 kW	**36-200078**	**36-215201**	with standard chassis
B3	**1.8, 1.9 dCi** 03/02 - 06/04 85 -88 kW	**36-216376**	**36-215201**	with standard chassis
B3	**1.8, 1.9 dCi** 07/04 - 85 -88 kW	**36-200078**	**36-215201**	with standard chassis
B3	**2.0** 03/02 - 06/04 103 kW	**36-212590**	**36-215201**	with standard chassis
B3	**2.0** 07/04 - 103 kW	**36-200078**	**36-215201**	with standard chassis
B3	**2.2 dCi, 2.2 Di** 03/02 - 06/04 93 -102 kW	**36-216369**	**36-215201**	with standard chassis
B3	**2.2 dCi, 2.2 Di** 07/04 - 93 -102 kW	**36-200283**	**36-215201**	with standard chassis
B4	**1.6, 1.8, 1.9 dCi, 2.0, 2.2 dCi, 2.2 Di** 01/02 - 78 -103 kW	i.V. i.V.	**19-174204**	

NISSAN PRIMERA Estate (WP12)

B1	**1.8, 1.9 dCi, 2.0, 2.2 dCi, 2.2 Di** 03/02 - 85 -103 kW		**12-226368**	
B3	**1.6 Visia** 01/02 - 06/04 80 kW	**36-214853**	**36-215201**	with standard chassis
B3	**1.6 Visia** 07/04 - 80 kW	**36-214853**	**36-215201**	with standard chassis
B3	**1.8** 03/02 - 06/04 85 kW	**36-214853**	**36-215201**	with standard chassis; manual transmission
B3	**1.8** 03/02 - 06/04 85 kW	**36-212590**	**36-215201**	with standard chassis; automatic transmission
B3	**1.8** 07/04 - 85 kW	**36-200078**	**36-215201**	with standard chassis
B3	**1.9 dCi, 2.0** 03/02 - 85 -103 kW	**36-200078**	**36-215201**	with standard chassis

N

NISSAN				
NISSAN PRIMERA Estate (WP12)				
B3	**2.2 dCi, 2.2 Di** 03/02 - 93 -102 kW	**36-200283**	**36-215201**	with standard chassis
B4	**1.8, 1.9 dCi, 2.0, 2.2 dCi, 2.2 Di** 03/02 - 85 -103 kW	i.V. i.V.	**19-174204**	
NISSAN QASHQAI (J10, JJ10)				
B3	**1.6** 02/07 - 84 kW	**36-199976**	**36-200511**	with standard chassis
B3	**2.0 All-wheel Drive** 02/07 - 103 kW	**36-213542**	**36-200528**	with standard chassis
B3	**1.5 dCi, 2.0** 02/07 - 76 -103 kW	**36-213542**	**36-200511**	with standard chassis
B3	**2.0 dCi, 2.0 dCi All-wheel Drive** 02/07 - 110 kW	**36-213559**	**36-213566**	with standard chassis
NISSAN SERENA (C23M)				
B4	**1.6 16V** 02/93 - 05/96 71 kW		**19-028477**	with standard chassis; rigid axle
B4	**2.0 D, 2.4** 11/92 - 10/95 49 -93 kW		**19-028477**	with standard chassis; equipment: ex. SGX; rigid axle
B4	**2.3 D** 01/95 - 09/01 55 kW		**19-028477**	with standard chassis; equipment: ex. SGX; rigid axle
NISSAN SKYLINE (R32)				
B6 Sport	**1.8, 2.0, 2.0 Turbo, 2.5** 03/89 - 06/93 67 -158 kW	**24-014731**	**24-014748**	mark: R32
B6 Sport	**2.0 4x4, 2.0 Turbo 4x4** 03/89 - 06/93 114 -158 kW	**24-014717**	**24-014724**	mark: R32
B8	**2.0 4x4, 2.0 Turbo 4x4** 03/89 - 06/93 114 -158 kW	*24-016728*	*24-016735*	mark: R32
NISSAN SKYLINE Coupe (R32)				
B6 Sport	**2.0, 2.0 Turbo** 03/89 - 06/93 114 -158 kW	**24-014731**	**24-014748**	mark: R32
B6 Sport	**2.0 4x4, 2.0 Turbo 4x4, 2.6 Twin Turbo 4x4** 03/89 - 06/93 114 -206 kW	**24-014717**	**24-014724**	mark: R32
B8	**2.0 4x4, 2.0 Turbo 4x4, 2.6 Twin Turbo 4x4** 03/89 - 06/93 114 -206 kW	*24-016728*	*24-016735*	mark: R32
NISSAN SKYLINE (R33)				
B6 Sport	**2.0, 2.5** 07/93 - 05/98 96 -140 kW	**24-018739**	**24-019163**	mark: R33
B6 Sport	**2.5 4x4** 07/93 - 05/98 140 kW	**24-021074**	**24-021081**	mark: R33
NISSAN SKYLINE Coupe (R33)				
B6 Sport	**2.0, 2.5** 07/93 - 07/00 96 -184 kW	**24-018739**	**24-019163**	mark: R33

N

NISSAN

NISSAN SKYLINE Coupe (R33)

B16 PSS9	**2.5 4x4, 2.6 Twin Turbo 4x4, 2.5 4x4** 07/93 - 07/00 140 -206 kW	*48-080750*		Without roadworthy certificate; mark: R34 VA: lowering (expertise): 40 mm HA: lowering (expertise): 40 mm

NISSAN SKYLINE (R34)

B6 Sport	**2.0, 2.5** 06/98 - 07/00 114 -147 kW	**24-018739** VO	**24-019163** VO	mark: R33
B6 Sport	**2.5 4x4** 06/98 - 07/00 147 kW	**24-021074** VO	**24-021081** HL	mark: R33

NISSAN SKYLINE Coupe (R34)

B6 Sport	**2.0, 2.5** 06/98 - 07/00 114 -147 kW	**24-018739** VO	**24-019163** VO	mark: R33

NISSAN SKYLINE Coupe (V35)

B16 PSS9	**3.5 4x4** 08/03 - 206 kW	*48-080750*		Without roadworthy certificate; mark: R34 VA: lowering (expertise): 40 mm HA: lowering (expertise): 40 mm

NISSAN SUNNY II Hatchback (N13)

B3	**1.0, 1.3, 1.4, 1.4 LX, 1.5, 1.6, 1.6 GTI 16V, 1.6 i, 1.6 i 12V, 1.7 D, 1.8 GTI 16V** 06/86 - 06/91 37 -92 kW	**36-163595**	**36-161935**	with standard chassis
B4	**1.3, 1.4 LX, 1.5, 1.6, 1.6 GTI 16V, 1.6 i, 1.6 i 12V, 1.7 D, 1.8 GTI 16V** 06/86 - 06/91 40 -92 kW	*22-044969* VA ↰ *22-044976* VA ↱	*22-044983* HA ↲ *22-044990* HA ↳	

NISSAN SUNNY II (N13)

B3	**1.3, 1.4, 1.4 LX, 1.5, 1.6, 1.6 GTI 16V, 1.6 i, 1.6 i 12V, 1.7 D** 06/86 - 10/91 40 -88 kW	**36-163595**	**36-161935**	with standard chassis
B4	**1.3, 1.4 LX, 1.5, 1.6, 1.6 GTI 16V, 1.6 i, 1.6 i 12V, 1.7 D** 06/86 - 10/91 40 -81 kW	*22-044969* VA ↰ *22-044976* VA ↱	*22-044983* HA ↲ *22-044990* HA ↳	

NISSAN SUNNY II Traveller (B12)

B3	**1.5, 1.6, 1.6 i, 1.6 i 12V, 1.7 D** 01/86 - 06/91 40 -66 kW	**36-163595**		with standard chassis
B4	**1.5, 1.6, 1.6 i, 1.6 i 12V, 1.7 D** 01/86 - 06/91 40 -66 kW	*22-044969* VA ↰ *22-044976* VA ↱	*22-044983* HA ↲ *22-044990* HA ↳	

NISSAN SUNNY II Coupe (B12)

B3	**1.5, 1.6, 1.6 GTI 16V, 1.6 i, 1.6 i 12V, 1.8 GTI 16V** 06/86 - 06/91 52 -92 kW	**36-163595**	**36-161935**	with standard chassis
B4	**1.5, 1.6, 1.6 GTI 16V, 1.6 i, 1.6 i 12V, 1.8 GTI 16V** 06/86 - 06/91 52 -92 kW	*22-044969* VA ↰ *22-044976* VA ↱	*22-044983* HA ↲ *22-044990* HA ↳	

NISSAN SUNNY III Liftback (N14)

B3	**1.4 i, 1.4 i 16V** 10/90 - 06/95 55 -64 kW	**36-163595**	**36-154883**	with standard chassis
B3	**1.4 i, 1.4 i 16V, 1.6 i, 1.6 i 16V, 2.0 D** 10/90 - 06/95 55 -75 kW		**36-163588**	with standard chassis; Heavy Duty Version .

N

NISSAN

NISSAN SUNNY III Liftback (N14)

B3	**1.6 i, 1.6 i 16V, 2.0 D** 10/90 - 05/95 55 -75 kW	**36-154869**	**36-154883**	with standard chassis
B4	**1.4 i** 10/90 - 05/95 55 kW	*22-047946* *22-047953*	*22-049179* *22-049186*	without ABS
B4	**1.4 i** 10/90 - 05/95 55 kW	*22-047946* *22-047953*	*22-049230*	with ABS
B4	**1.6 i** 10/90 - 05/95 66 kW	*22-047946* *22-047953*	*22-049216*	without ABS
B4	**1.6 i, 1.6 i 16V** 10/90 - 05/95 66 -75 kW	*22-047946* *22-047953*	*22-049230*	with ABS
B4	**1.6 i 16V** 10/92 - 10/93 75 kW	*22-047946* *22-047953*	*22-049216*	without ABS
B4	**1.6 i 16V** 11/93 - 05/95 75 kW	*22-047946* *22-047953*	*22-049179* *22-049186*	without ABS
B4	**2.0 i 16V** 10/90 - 05/95 105 kW	*22-047946* *22-047953*	*22-049230*	with ABS
B4	**2.0 D** 10/90 - 05/95 55 kW	*22-047946* *22-047953*	*22-049179* *22-049186*	without ABS
B4	**2.0 D** 10/90 - 05/95 55 kW	*22-047946* *22-047953*	*22-049230*	with ABS

NISSAN SUNNY III Hatchback (N14)

B3	**1.4, 1.4 i, 1.4 i 16V** 10/90 - 06/95 55 -64 kW	**36-163595**	**36-154883**	with standard chassis
B3	**1.4, 1.4 i, 1.4 i 16V, 1.6 i, 1.6 i 16V, 2.0 D** 10/90 - 06/95 55 -75 kW		**36-163588**	with standard chassis; Heavy Duty Version .
B3	**1.6 i, 1.6 i 16V, 2.0 D** 10/90 - 05/95 55 -75 kW	**36-154869**	**36-154883**	with standard chassis
B4	**1.4 i, 1.4 i 16V** 10/90 - 05/95 55 -64 kW	*22-047946* *22-047953*	*22-049179* *22-049186*	without ABS
B4	**1.4 i, 1.4 i 16V** 10/90 - 05/95 55 -64 kW	*22-047946* *22-047953*	*22-049230*	with ABS
B4	**1.6 i** 10/90 - 05/95 66 kW	*22-047946* *22-047953*	*22-049216*	without ABS
B4	**1.6 i, 1.6 i 16V** 10/90 - 05/95 66 -75 kW	*22-047946* *22-047953*	*22-049230*	with ABS
B4	**1.6 i 16V** 10/92 - 10/93 75 kW	*22-047946* *22-047953*	*22-049216*	without ABS
B4	**1.6 i 16V** 11/93 - 05/95 75 kW	*22-047946* *22-047953*	*22-049179* *22-049186*	without ABS
B4	**2.0 D** 10/90 - 05/95 55 kW	*22-047946* *22-047953*	*22-049179* *22-049186*	without ABS
B4	**2.0 D** 10/90 - 05/95 55 kW	*22-047946* *22-047953*	*22-049230*	with ABS

NISSAN SUNNY III (N14)

B3	**1.4, 1.4 i, 1.4 i 16V** 10/90 - 06/95 55 -64 kW	**36-163595**	**36-154883**	with standard chassis

NISSAN

NISSAN SUNNY III (N14)

B3	**1.4, 1.4 i, 1.4 i 16V, 1.6, 1.6 i, 1.6 i 16V, 2.0, 2.0 D** 08/90 - 12/96 55 -104 kW		**36-163588**	with standard chassis; Heavy Duty Version .
B3	**1.6, 1.6 i, 1.6 i 16V, 2.0, 2.0 D** 08/90 - 05/95 55 -104 kW	**36-154869**	**36-154883**	with standard chassis
B4	**1.4 i** 10/90 - 05/95 55 kW	*22-047946* *22-047953*	*22-049179* *22-049186*	without ABS
B4	**1.4 i** 10/90 - 05/95 55 kW	*22-047946* *22-047953*	*22-049230*	with ABS
B4	**1.6 i 16V** 10/92 - 10/93 75 kW	*22-047946* *22-047953*	*22-049216*	without ABS
B4	**1.6 i 16V** 11/93 - 05/95 75 kW	*22-047946* *22-047953*	*22-049179* *22-049186*	without ABS
B4	**1.6, 1.6 i, 2.0** 08/90 - 12/96 66 -104 kW	*22-047946* *22-047953*	*22-049216*	without ABS
B4	**1.6, 1.6 i, 1.6 i 16V, 2.0** 08/90 - 12/96 66 -104 kW	*22-047946* *22-047953*	*22-049230*	with ABS
B4	**2.0 D** 10/90 - 05/95 55 kW	*22-047946* *22-047953*	*22-049179* *22-049186*	without ABS
B4	**2.0 D** 10/90 - 05/95 55 kW	*22-047946* *22-047953*	*22-049230*	with ABS

NISSAN TITAN

B6 Offroad	**5.6 SE** 10/03 - 227 kW	*24-197656* *24-116237*	**24-185967**	rear wheel drive
B6 Offroad	**5.6 Flex-Fuel 4WD, 5.6 LE 4x4** 10/03 - 224 -227 kW	*24-116237*	**24-116244**	all-wheel drive

NISSAN TERRANO I (WD21)

B3	**2.4 i 4WD, 2.7 TD 4WD, 3.0 i 4WD** 10/87 - 12/95 73 -109 kW		**36-217045**	with standard chassis
B4	**2.4 i 4WD** 10/87 - 02/93 76 kW	**19-061085**	**19-061092**	
B4	**3.0 i 4WD** 01/90 - 12/95 109 kW	**19-061085**	**19-061092**	
B4	**2.7 TD 4WD** 02/89 - 02/96 73 kW	**19-061085**	**19-061092**	
B6 Offroad	**2.4 i 4WD, 2.7 TD 4WD, 3.0 i 4WD** 10/87 - 02/93 73 -109 kW	**24-012454**	**24-020770**	

NISSAN TERRANO II (R20)

B3	**2.4 4WD, 2.7 TDi 4WD** 05/96 - 06/99 85 -92 kW		**36-219230**	with standard chassis; Number of Doors: 3
B3	**2.4 4WD, 2.7 TDi 4WD** 07/99 - 85 -92 kW		**36-219247**	with standard chassis; Number of Doors: 3
B3	**2.4 4WD, 2.7 TDi 4WD** 05/96 - 06/99 85 -92 kW		**36-219254**	with standard chassis; Heavy Duty Version .; Number of Doors: 5
B3	**2.4 4WD, 2.7 TDi 4WD** 07/99 - 85 -92 kW		**36-215133**	with standard chassis; Number of Doors: 5

N

NISSAN				
NISSAN TERRANO II (R20)				
B4	**2.4 4WD, 2.4 i 12V 4WD, 2.7 TD 4WD, 2.7 TDi 4WD** 02/93 - 74 -92 kW	**19-105895**	**19-061092**	
B6 Offroad	**2.4 4WD, 2.4 i 12V 4WD, 2.7 TD 4WD, 2.7 TDi 4WD, 3.0 Di 4WD, 3.0 DiTD 4x4, 3.2 TDi 4x4** 10/92 - 06/03 74 -125 kW	**24-020763**	**24-020770**	
NISSAN XTERRA (N50)				
B4	**2.8 4x4** 01/05 - 104 kW	**19-172903**	**19-172910**	without electronic suspension control
B6 Offroad	**2.8 4x4** 01/05 - 104 kW	**24-140874**	**24-144384**	without electronic suspension control
NISSAN X-TRAIL (T30)				
B3	**2.0, 2.0 4x4, 2.0 LX** 07/01 - 10/05 103 -110 kW	**36-216284**	36-216321	with standard chassis
B3	**2.0, 2.0 4x4, 2.0 LX** 11/05 - 103 -110 kW	**36-216307**	36-216321	with standard chassis
B3	**2.2 DCi, 2.2 dCi 4x4, 2.2 DCi FWD, 2.2 Di 4x4** 07/01 - 05/05 84 -100 kW	**36-216291**	36-216321	with standard chassis
B3	**2.2 DCi, 2.2 dCi 4x4, 2.2 Di 4x4** 06/05 - 84 -100 kW	**36-215171**	36-216321	with standard chassis
B3	**2.5 4x4** 11/02 - 10/05 121 -132 kW	**36-216284**	36-216321	with standard chassis
B3	**2.5 4x4** 06/05 - 121 -132 kW	**36-216307**	36-216321	with standard chassis
NISSAN X-TRAIL (T31)				
B4	**2.0, 2.0 FWD, 2.0 dCi, 2.0 dCi FWD, 2.5** 03/07 - 103 -127 kW	22-213747 22-213754	**19-213767**	with standard chassis
NISSAN PRIMASTAR Bus (X83)				
B1	**2.0, dCi 100, dCi 115, dCi 120, dCi 140, dCi 150, dCi 80, dCi 90** 03/01 - 60 -107 kW	**12-224210**		VA: with ball bearing
B3	**2.0, dCi 100, dCi 115, dCi 120, dCi 140, dCi 150, dCi 80, dCi 90** 03/01 - 60 -107 kW	36-199488	**36-198078**	with standard chassis
B4	**2.0, dCi 100, dCi 115, dCi 120, dCi 140, dCi 150, dCi 80, dCi 90** 03/01 - 60 -107 kW		**19-152615**	
NISSAN PRIMASTAR Box (X83)				
B1	**2.0, dCi 100, dCi 115, dCi 120, dCi 140, dCi 150, dCi 80, dCi 90** 09/02 - 60 -107 kW	**12-224210**		VA: with ball bearing
B3	**2.0, dCi 100, dCi 115, dCi 120, dCi 140, dCi 150, dCi 80, dCi 90** 09/02 - 60 -107 kW	36-199488	**36-198078**	with standard chassis
B4	**2.0, dCi 100, dCi 115, dCi 120, dCi 140, dCi 150, dCi 80, dCi 90** 09/02 - 60 -107 kW		**19-152615**	

N

NISSAN

NISSAN PRIMASTAR Box (X83)

NISSAN VANETTE CARGO Box (HC 23)

B4	**1.6 i, 2.3 D** 01/95 - 55 -71 kW		**19-028477**	with standard chassis; rigid axle

NSU

NSU 1000

B6 Sport	**C** 08/63 - 12/72 29 kW	**24-630085**	**24-004732**	

NSU 1200

B6 Sport	**C** 09/69 - 11/71 40 kW		**24-004732**	

NSU PRINZ

B6 Sport	**1000, 1200, 600, 600 4L** 08/61 - 03/74 22 -48 kW	**24-630085**	**24-004732**	

NSU TT

B6 Sport	**1.2** 07/65 - 11/71 48 kW	**24-630085**	**24-004732**	

NSU TTS

B6 Sport	**1.0** 01/70 - 11/71 52 kW	**24-630085**	**24-004732**	

OPEL

OPEL AGILA (H00)

B3	**1.0 12V, 1.2 16V** 09/00 - 12/02 43 -55 kW	**36-215287**	*36-215379*	with standard chassis
B3	**1.0 12V, 1.2 16V** 01/03 - 43 -55 kW		**36-219285**	with standard chassis
B3	**1.0, 1.2 16V Twinport, 1.3 CDTI** 08/03 - 44 -59 kW		**36-219285**	with standard chassis
B4	**1.0, 1.0 12V, 1.2 16V, 1.2 16V Twinport, 1.3 CDTI** 09/00 - 43 -59 kW		**19-168784**	with standard chassis

OPEL AGILA

B4	**1.0, 1.0 LPG, 1.2, 1.2 LPG, 1.3 CDTI** 04/08 - 48 -69 kW	**22-166722** **22-166739**	**19-156545**	

OPEL ASCONA A (81_, 86_, 87_, 88_)

B3	**1.2 S** 04/72 - 08/75 44 kW		**36-162741**	with standard chassis
B3	**1.6 N, 1.6 S, 1.9 SR** 03/71 - 08/75 44 -66 kW		**36-162741**	with standard chassis
B4	**1.2 S, 1.6 N, 1.6 S, 1.9 SR** 03/71 - 08/75 44 -66 kW		*19-019604*	

N
O

OPEL				
OPEL ASCONA A (81_, 86_, 87_, 88_)				
B6 Sport	**1.2 S, 1.6 N, 1.6 S, 1.9 SR** 03/71 - 08/75 44 -66 kW	**24-627726**	**24-009188**	VA: charakteristic: 310/150
OPEL ASCONA A Voyage (84_, 89_)				
B4	**1.6 N, 1.6 S, 1.9 SR** 10/70 - 08/75 44 -66 kW		*19-019604*	
OPEL ASCONA B (81_, 86_, 87_, 88_)				
B3	**1.2, 1.2 S, 1.3 N, 1.3 S** 09/75 - 08/81 40 -55 kW	**36-162659**	**36-162604**	with standard chassis
B3	**1.6 N, 1.6 S, 1.9 N, 1.9 S, 2.0 E, 2.0 N, 2.0 S** 09/75 - 08/81 44 -81 kW	**36-162680**	**36-162604**	with standard chassis
B3	**2.0 D** 08/78 - 08/81 43 kW		**36-162604**	with standard chassis
B4	**1.2, 1.2 S, 1.3 N, 1.3 S, 1.6 N, 1.6 S, 1.9 N, 1.9 S, 2.0 D, 2.0 N, 2.0 S** 09/75 - 08/81 40 -74 kW	**19-019444**	*19-019604*	
B4	**2.0 E** 08/79 - 08/81 81 kW		*19-019604*	
B6 Sport	**1.2, 1.2 S, 1.3 N, 1.3 S, 1.6 N, 1.6 S, 1.9 N, 1.9 S, 2.0 D, 2.0 E, 2.0 N, 2.0 S** 09/75 - 08/81 40 -81 kW	**24-006866**	**24-008938**	VA: charakteristic: 150/60 HA: charakteristic: 220/80
B6 Sport	**1.2, 1.2 S, 1.3 N, 1.3 S, 1.6 N, 1.6 S, 1.9 N, 1.9 S, 2.0 D, 2.0 E, 2.0 N, 2.0 S, 2.4 400** 09/75 - 08/81 40 -106 kW	**24-008839**	**24-008938**	mark: Rallye VA: charakteristic: 331/124 HA: charakteristic: 220/80
B6 Sport	**1.2, 1.2 S, 1.3 N, 1.3 S, 1.6 N, 1.6 S, 1.9 N, 1.9 S, 2.0 D, 2.0 E, 2.0 N, 2.0 S** 09/75 - 08/81 40 -81 kW	**24-000819**	**24-000918**	mark: Rennen VA: charakteristic: 310/160 HA: charakteristic: 274/95
OPEL ASCONA C Hatchback (84_, 89_)				
B3	**1.3 N, 1.3 S** 09/81 - 05/82 44 -55 kW	**36-161829**	**38-154508**	with standard chassis; manual transmission
B3	**1.3 N, 1.3 S** 09/81 - 05/82 44 -55 kW	**36-161812**	**38-154508**	with standard chassis; automatic transmission
B3	**1.3 N, 1.3 S** 06/82 - 08/88 44 -55 kW	**36-161560**	**38-154508**	with standard chassis; manual transmission
B3	**1.3 N, 1.3 S** 06/82 - 08/88 44 -55 kW	**36-161522**	**38-154508**	with standard chassis; automatic transmission
B3	**1.6, 1.6 i, 1.6 i CAT, 1.6 S** 09/81 - 08/88 55 -66 kW	**36-161539**	**38-154508**	with standard chassis; manual transmission
B3	**1.6, 1.6 i, 1.6 i CAT, 1.6 S** 09/81 - 08/88 55 -66 kW	**36-161515**	**38-154508**	with standard chassis; automatic transmission
B3	**1.8 E** 01/85 - 08/86 74 kW	**36-161560**	**38-154508**	with standard chassis; manual transmission
B3	**1.8 E** 01/85 - 08/86 74 kW	**36-161539**	**38-154508**	with standard chassis; automatic transmission
B3	**1.6 D** 03/82 - 08/88 40 kW	**36-161515**	**38-154508**	with standard chassis; manual transmission

OPEL				
OPEL ASCONA C Hatchback (84_, 89_)				
B3	**1.6 D** 03/82 - 08/88 40 kW		**38-154508**	with standard chassis; automatic transmission
B4	**1.3 N, 1.3 S, 1.6, 1.6 D, 1.6 S, 1.8 i** 09/81 - 08/84 40 -85 kW	*21-030437* **11-101314** SP	**19-019864**	-> CH.Nr.: F1.003.026; -> CH.Nr.: F5.000.000; -> CH.Nr.: 6.000.000
B4	**1.3 N, 1.3 S, 1.6, 1.6 D, 1.6 S, 1.8 i** 09/84 - 08/88 40 -85 kW		**19-019864**	CH.Nr.: F1.003.027 ->; CH.Nr.: F5.000.001 ->; CH.Nr.: 6.000.001 ->
B4	**1.6, 1.6 i, 1.6 i CAT, 1.8, 1.8 E, 2.0 i, 2.0 i CAT, 2.0 i GT** 01/85 - 08/88 55 -95 kW		**19-019864**	
B6 Sport	**1.3 N, 1.3 S, 1.6, 1.6 D, 1.6 i, 1.6 i CAT, 1.6 S, 1.8, 1.8 E, 1.8 i, 2.0 i, 2.0 i CAT, 2.0 i GT** 09/81 - 08/88 40 -95 kW		*24-000970*	
OPEL ASCONA C (81_, 86_, 87_, 88_)				
B3	**1.3 N, 1.3 S** 09/81 - 05/82 44 -55 kW	**36-161829**	**38-154508**	with standard chassis; manual transmission
B3	**1.3 N, 1.3 S** 09/81 - 05/82 44 -55 kW	**36-161812**	**38-154508**	with standard chassis; automatic transmission
B3	**1.3 N, 1.3 S** 06/82 - 08/88 44 -55 kW	**36-161560**	**38-154508**	with standard chassis; manual transmission
B3	**1.3 N, 1.3 S** 06/82 - 08/88 44 -55 kW	**36-161522**	**38-154508**	with standard chassis; automatic transmission
B3	**1.6, 1.6 i, 1.6 i CAT, 1.6 S** 09/81 - 08/88 55 -66 kW	**36-161539**	**38-154508**	with standard chassis; manual transmission
B3	**1.6, 1.6 i, 1.6 i CAT, 1.6 S** 09/81 - 08/88 55 -66 kW	**36-161515**	**38-154508**	with standard chassis; automatic transmission
B3	**1.8 E** 01/85 - 08/86 74 kW	**36-161560**	**38-154508**	with standard chassis; manual transmission
B3	**1.8 E** 01/85 - 08/86 74 kW	**36-161539**	**38-154508**	with standard chassis; automatic transmission
B3	**1.6 D** 03/82 - 08/88 40 kW	**36-161515**	**38-154508**	with standard chassis; manual transmission
B3	**1.6 D** 03/82 - 08/88 40 kW		**38-154508**	with standard chassis; automatic transmission
B4	**1.3 N, 1.3 S, 1.6, 1.6 D, 1.6 S, 1.8 i, 2.0** 09/81 - 08/84 40 -85 kW	*21-030437* **11-101314** SP	**19-019864**	-> CH.Nr.: F1.003.026; -> CH.Nr.: F5.000.000; -> CH.Nr.: 6.000.000
B4	**1.3 N, 1.3 S, 1.6, 1.6 D, 1.6 S, 1.8 i** 09/84 - 08/88 40 -85 kW		**19-019864**	CH.Nr.: F1.003.027 ->; CH.Nr.: F5.000.001 ->; CH.Nr.: 6.000.001 ->
B4	**1.6, 1.6 i, 1.6 i CAT, 1.8, 1.8 E, 2.0, 2.0 i, 2.0 i CAT, 2.0 i GT** 09/81 - 08/88 55 -95 kW		**19-019864**	
B6 Sport	**1.3 N, 1.3 S, 1.6, 1.6 i, 1.6 i CAT, 1.6 S, 1.8, 1.8 E, 1.8 i, 2.0, 2.0 i, 2.0 i CAT, 2.0 i GT** 09/81 - 08/88 44 -95 kW		*24-000970*	

OPEL				
OPEL ASTRA F Hatchback (53_, 54_, 58_, 59_)				
B1	**1.4, 1.4 i, 1.4 i 16V, 1.4 Si, 1.6, 1.6 i, 1.6 i 16V, 1.6 Si, 1.7 D, 1.7 TD, 1.7 TDS, 1.8, 1.8 i, 1.8 i 16V, 2.0 GSI 16V, 2.0 i, 2.0 i 16V** 09/91 - 01/98 42 -110 kW	**12-116812**		VA: with ball bearing
B2	**1.4, 1.4 i, 1.4 i 16V, 1.4 Si, 1.6, 1.6 i, 1.6 i 16V, 1.6 Si, 1.7 D, 1.7 TD, 1.7 TDS, 1.8, 1.8 i, 1.8 i 16V, 2.0 i** 09/91 - 01/98 42 -92 kW	**16-031548** **11-101369** *SP*	**15-062215**	
B3	**1.4, 1.4 i, 1.4 i 16V, 1.4 Si, 1.6, 1.6 i, 1.6 i 16V, 1.6 Si** 09/91 - 12/94 44 -74 kW	**36-130481**	**38-130366**	with standard chassis
B3	**1.4, 1.4 i, 1.4 i 16V, 1.4 Si, 1.6, 1.6 i, 1.6 i 16V, 1.6 Si** 09/91 - 12/94 44 -74 kW	**36-130139**	**38-130465**	with standard chassis; Heavy Duty Version .
B3	**1.6 i 16V, 1.7 D, 1.7 TD, 1.7 TDS, 1.8, 1.8 i, 1.8 i 16V, 2.0 GSI 16V, 2.0 i, 2.0 i 16V** 09/91 - 01/98 42 -110 kW	**36-197941**	**38-161063**	with sports suspension; mark: GSI
B3	**1.7 D, 1.8, 1.8 i, 1.8 i 16V, 2.0 i, 2.0 i 16V** 09/91 - 01/98 42 -100 kW	**36-130115**	**38-130366**	with standard chassis
B3	**1.7 D, 1.7 TD, 1.7 TDS, 1.8, 1.8 i, 1.8 i 16V, 2.0 i, 2.0 i 16V** 09/91 - 01/98 42 -100 kW	**36-130139**	**38-130465**	with standard chassis; Heavy Duty Version .
B3	**1.7 TD, 1.7 TDS** 12/91 - 01/98 50 -60 kW	**36-130122**	**38-130366**	with standard chassis
B4	**1.4, 1.4 i, 1.4 i 16V, 1.4 Si, 1.6, 1.6 i, 1.6 i 16V, 1.6 Si, 1.7 D, 1.7 TD, 1.7 TDS, 1.8, 1.8 i, 1.8 i 16V, 2.0 GSI 16V, 2.0 i, 2.0 i 16V** 09/91 - 01/98 42 -110 kW	**21-030260** **11-101369** *SP*	**19-019956**	
B6 Sport	**1.4, 1.4 i, 1.4 i 16V, 1.4 Si, 1.6, 1.6 i, 1.6 i 16V, 1.6 Si, 1.7 D, 1.7 TD, 1.7 TDS, 1.8, 1.8 i, 1.8 i 16V, 2.0 GSI 16V, 2.0 i, 2.0 i 16V** 09/91 - 01/98 42 -110 kW	**34-030035**	**24-015523**	
B8	**1.4, 1.4 i, 1.4 i 16V, 1.4 Si, 1.6, 1.6 i, 1.6 i 16V, 1.6 Si, 1.7 D, 1.7 TD, 1.7 TDS, 1.8, 1.8 i, 1.8 i 16V, 2.0 GSI 16V, 2.0 i, 2.0 i 16V** 09/91 - 01/98 42 -110 kW	**34-181577**	**24-015523**	
B10	**1.4, 1.4 i, 1.4 i 16V, 1.4 Si, 1.6, 1.6 i, 1.6 i 16V, 1.6 Si, 1.7 D, 1.7 TD, 1.7 TDS, 1.8, 1.8 i, 1.8 i 16V, 2.0 GSI 16V, 2.0 i, 2.0 i 16V** 09/91 - 01/98 42 -110 kW	**46-111920**		Conditions see certificates; manual transmission VA: lowering (expertise): 60 mm; axle load to: 900 kg HA: lowering (expertise): 40 mm; axle load to: 800 kg
B12 PK	**1.4, 1.4 i, 1.4 i 16V, 1.4 Si, 1.6, 1.6 i, 1.6 i 16V, 1.6 Si, 1.7 D, 1.7 TD, 1.7 TDS, 1.8, 1.8 i, 1.8 i 16V, 2.0 GSI 16V, 2.0 i, 2.0 i 16V** 09/91 - 01/98 42 -110 kW	**46-188861**		Conditions see certificates VA: lowering (expertise): 30 mm; axle load to: 870 kg HA: lowering (expertise): 30 mm; axle load to: 800 kg
B12 SL	**1.4, 1.4 i, 1.4 i 16V, 1.4 Si, 1.6, 1.6 i, 1.6 i 16V, 1.6 Si, 1.7 D, 1.7 TD, 1.7 TDS, 1.8, 1.8 i, 1.8 i 16V, 2.0 GSI 16V, 2.0 i, 2.0 i 16V** 09/91 - 01/98 42 -110 kW	**46-188885**		Conditions see certificates VA: lowering (expertise): 45-50 mm; axle load to: 900 kg HA: lowering (expertise): 30 mm; axle load to: 800 kg

OPEL				
OPEL ASTRA F (56_, 57_)				
B1	**1.4, 1.4 i, 1.4 i 16V, 1.4 Si, 1.6, 1.6 i, 1.6 i 16V, 1.6 Si, 1.7 D, 1.7 TD, 1.7 TDS, 1.8 i, 1.8 i 16V, 2.0 i, 2.0 i 16V** 09/91 - 09/98 42 -100 kW	**12-116812**		VA: with ball bearing
B2	**1.4, 1.4 i, 1.4 i 16V, 1.4 Si, 1.6, 1.6 i, 1.6 i 16V, 1.6 Si, 1.7 D, 1.7 TD, 1.7 TDS, 1.8 i, 1.8 i 16V, 2.0 i, 2.0 i 16V** 09/91 - 09/98 42 -100 kW	**16-031548** **11-101369** SP	**15-062215**	
B3	**1.4, 1.4 i, 1.4 i 16V, 1.4 Si, 1.6, 1.6 i, 1.6 i 16V, 1.6 Si** 09/91 - 12/94 44 -74 kW	**36-130481**	**38-130366**	with standard chassis
B3	**1.4, 1.4 i, 1.4 i 16V, 1.4 Si, 1.6, 1.6 i, 1.6 i 16V, 1.6 Si, 1.7 D, 1.7 TD, 1.7 TDS, 1.8 i, 1.8 i 16V, 2.0 i, 2.0 i 16V** 09/91 - 09/98 42 -100 kW	**36-130139**	**38-130465**	with standard chassis; Heavy Duty Version .
B3	**1.6 i 16V, 1.7 D, 1.7 TD, 1.7 TDS, 1.8 i, 1.8 i 16V, 2.0 i, 2.0 i 16V** 03/92 - 09/98 42 -100 kW	**36-197941**	**38-161063**	with sports suspension; mark: GSI
B3	**1.7 D, 1.8 i, 1.8 i 16V, 2.0 i, 2.0 i 16V** 03/92 - 09/98 42 -100 kW	**36-130115**	**38-130366**	with standard chassis
B3	**1.7 TD, 1.7 TDS** 03/92 - 09/98 50 -60 kW	**36-130122**	**38-130366**	with standard chassis
B4	**1.4, 1.4 i, 1.4 i 16V, 1.4 Si, 1.6, 1.6 i, 1.6 i 16V, 1.6 Si, 1.7 D, 1.7 TD, 1.7 TDS, 1.8 i, 1.8 i 16V, 2.0 i, 2.0 i 16V** 09/91 - 09/98 42 -100 kW	**21-030260** **11-101369** SP	**19-019956**	
B6 Sport	**1.4, 1.4 i, 1.4 i 16V, 1.4 Si, 1.6, 1.6 i, 1.6 i 16V, 1.6 Si, 1.7 D, 1.7 TD, 1.7 TDS, 1.8 i, 1.8 i 16V, 2.0 i, 2.0 i 16V** 09/91 - 09/98 42 -100 kW	**34-030035**	**24-015523**	
B8	**1.4, 1.4 i, 1.4 i 16V, 1.4 Si, 1.6, 1.6 i, 1.6 i 16V, 1.6 Si, 1.7 D, 1.7 TD, 1.7 TDS, 1.8 i, 1.8 i 16V, 2.0 i, 2.0 i 16V** 09/91 - 09/98 42 -100 kW	**34-181577**	**24-015523**	
B10	**1.4, 1.4 i, 1.4 i 16V, 1.4 Si, 1.6, 1.6 i, 1.6 i 16V, 1.6 Si, 1.7 D, 1.7 TD, 1.7 TDS, 1.8 i, 1.8 i 16V, 2.0 i, 2.0 i 16V** 09/91 - 09/98 42 -100 kW	**46-111920**		Conditions see certificates; manual transmission VA: lowering (expertise): 60 mm; axle load to: 900 kg HA: lowering (expertise): 40 mm; axle load to: 800 kg
B12 PK	**1.4, 1.4 i, 1.4 i 16V, 1.4 Si, 1.6, 1.6 i, 1.6 i 16V, 1.6 Si, 1.7 D, 1.7 TD, 1.7 TDS, 1.8 i, 1.8 i 16V, 2.0 i, 2.0 i 16V** 09/91 - 09/98 42 -100 kW	**46-188861**		Conditions see certificates VA: lowering (expertise): 30 mm; axle load to: 870 kg HA: lowering (expertise): 30 mm; axle load to: 800 kg
B12 SL	**1.4, 1.4 i, 1.4 i 16V, 1.4 Si, 1.6, 1.6 i, 1.6 i 16V, 1.6 Si, 1.7 D, 1.7 TD, 1.7 TDS, 1.8 i, 1.8 i 16V, 2.0 i, 2.0 i 16V** 09/91 - 09/98 42 -100 kW	**46-188885**		Conditions see certificates VA: lowering (expertise): 45-50 mm; axle load to: 900 kg HA: lowering (expertise): 30 mm; axle load to: 800 kg

O

OPEL				
OPEL ASTRA F Estate (51_, 52_)				
B1	**1.4, 1.4 i, 1.4 i 16V, 1.4 Si, 1.6, 1.6 i, 1.6 i 16V, 1.6 Si, 1.7 D, 1.7 TD, 1.7 TDS, 1.8 i, 1.8 i 16V, 2.0 i, 2.0 i 16V** 09/91 - 01/98 42 -110 kW	**12-116812**		VA: with ball bearing
B2	**1.4, 1.4 i, 1.4 i 16V, 1.4 Si, 1.6, 1.6 i, 1.6 i 16V, 1.6 Si, 1.7 D, 1.7 TD, 1.7 TDS, 1.8 i, 1.8 i 16V, 2.0 i, 2.0 i 16V** 09/91 - 01/98 42 -110 kW	**16-031548** **11-101369** SP	**15-069115**	
B3	**1.4, 1.4 i, 1.4 i 16V, 1.4 Si, 1.6, 1.6 i, 1.6 i 16V, 1.6 Si** 09/91 - 12/94 44 -74 kW	**36-130481**	**38-130380**	with standard chassis; without ride height adjustment
B3	**1.4, 1.4 i, 1.4 i 16V, 1.4 Si, 1.6, 1.6 i, 1.6 i 16V, 1.6 Si** 09/91 - 12/94 44 -74 kW	**36-130139**		with standard chassis; Heavy Duty Version .
B3	**1.6 i 16V, 1.7 D, 1.7 TD, 1.7 TDS, 1.8 i, 1.8 i 16V, 2.0 i, 2.0 i 16V** 03/93 - 01/98 42 -110 kW	**36-197941**	**38-130380**	with sports suspension; without ride height adjustment
B3	**1.7 D, 1.7 TD, 1.7 TDS, 1.8 i, 1.8 i 16V, 2.0 i, 2.0 i 16V** 09/91 - 01/98 42 -110 kW	**36-130115**	**38-130380**	with standard chassis; without ride height adjustment
B3	**1.7 D, 1.7 TD, 1.7 TDS, 1.8 i, 1.8 i 16V, 2.0 i, 2.0 i 16V** 09/91 - 01/98 42 -110 kW	**36-130139**		with standard chassis; Heavy Duty Version .
B4	**1.4, 1.4 i, 1.4 i 16V, 1.4 Si, 1.6, 1.6 i, 1.6 i 16V, 1.6 Si, 1.7 D, 1.7 TD, 1.7 TDS, 1.8 i, 1.8 i 16V, 2.0 i, 2.0 i 16V** 09/91 - 01/98 42 -110 kW	**21-030260** **11-101369** SP	**19-019772**	with standard chassis
B6 Sport	**1.4, 1.4 i, 1.4 i 16V, 1.4 Si, 1.6, 1.6 i, 1.6 i 16V, 1.6 Si, 1.7 D, 1.7 TD, 1.7 TDS, 1.8 i, 1.8 i 16V, 2.0 i, 2.0 i 16V** 09/91 - 01/98 42 -110 kW	**34-030035**	**24-016476**	HA: firmer setting
B8	**1.4, 1.4 i, 1.4 i 16V, 1.4 Si, 1.6 i, 1.6 i 16V, 1.6 Si, 1.7 D, 1.7 TD, 1.7 TDS, 1.8 i, 1.8 i 16V, 2.0 i, 2.0 i 16V** 09/91 - 01/98 42 -110 kW	**34-181577**	**24-016483**	
B12 PK	**1.4, 1.4 i, 1.4 i 16V, 1.4 Si, 1.6, 1.6 i, 1.6 i 16V, 1.6 Si, 1.7 D, 1.7 TD, 1.7 TDS, 1.8 i, 1.8 i 16V, 2.0 i, 2.0 i 16V** 09/91 - 01/98 42 -110 kW	**46-188878**		Conditions see certificates VA: lowering (expertise): 30 mm; axle load to: 870 kg HA: lowering (expertise): 30 mm; axle load to: 860 kg
OPEL ASTRA F Convertible (53_B)				
B1	**1.4 i 16V, 1.4 Si, 1.6 i, 1.8 i 16V, 2.0 i** 03/93 - 03/01 52 -85 kW	**12-116812**		VA: with ball bearing
B2	**1.4 i 16V, 1.4 Si, 1.6 i, 1.8 i 16V, 2.0 i** 03/93 - 03/01 52 -85 kW	**16-031548** **11-101369** SP	**15-062215**	
B3	**1.4 i 16V, 1.4 Si, 1.6 i** 03/93 - 03/01 52 -66 kW	**36-130481**	**38-130465**	with standard chassis
B3	**1.4 i 16V, 1.4 Si, 1.6 i, 1.8 i 16V, 2.0 i** 03/93 - 03/01 52 -85 kW	**36-130139**		with standard chassis; Heavy Duty Version .
B3	**1.8 i 16V, 2.0 i** 03/93 - 03/01 85 kW	**36-130115**	**38-130465**	with standard chassis

OPEL				
OPEL ASTRA F Convertible (53_B)				
B3	**1.8 i 16V, 2.0 i** 03/93 - 03/01 85 kW	**36-197941**	**38-130465**	with sports suspension; mark: GSI
B4	**1.4 i 16V, 1.4 Si, 1.6 i, 1.8 i 16V, 2.0 i** 03/93 - 03/01 52 -85 kW	**21-030260** **11-101369** SP	**19-019956**	
B6 Sport	**1.4 i 16V, 1.4 Si, 1.6 i, 1.8 i 16V, 2.0 i** 03/93 - 03/01 52 -85 kW	**34-030035**	**24-015523**	
B8	**1.4 i 16V, 1.4 Si, 1.6 i, 1.8 i 16V, 2.0 i** 03/93 - 03/01 52 -85 kW	**34-181577**	**24-015523**	
B12 PK	**1.4 i 16V, 1.4 Si, 1.6 i, 1.8 i 16V, 2.0 i** 03/93 - 03/01 52 -85 kW	**46-188861**		Conditions see certificates VA: lowering (expertise): 30 mm; axle load to: 870 kg HA: lowering (expertise): 30 mm; axle load to: 800 kg
OPEL ASTRA F Van (55_)				
B1	**1.4 i, 1.6 i, 1.7 D, 1.7 TD** 10/91 - 01/99 42 -55 kW	**12-116812**		VA: with ball bearing
B2	**1.4 i, 1.6 i, 1.7 D, 1.7 TD** 10/91 - 01/99 42 -55 kW	**16-031548** **11-101369** SP		
B4	**1.4 i, 1.6 i, 1.7 D, 1.7 TD** 10/91 - 01/99 42 -55 kW	**21-030260** **11-101369** SP		
OPEL ASTRA F CLASSIC Hatchback				
B1	**1.4 i, 1.6 i, 1.6 i 16V, 1.7 TD, 1.8 i, 2.0 Di, 2.0 DTi, 2.0 i** 01/98 - 08/02 44 -118 kW	**12-116812**		VA: with ball bearing
B2	**1.4 i, 1.6 i, 1.6 i 16V, 1.7 TD, 1.8 i, 2.0 Di, 2.0 DTi, 2.0 i** 01/98 - 08/02 44 -118 kW	**16-031548** **11-101369** SP	**15-062215**	
B3	**1.4 i, 1.6 i, 1.6 i 16V** 01/98 - 08/02 44 -74 kW	**36-130481**	**38-130366**	with standard chassis
B3	**1.4 i, 1.6 i, 1.6 i 16V, 1.7 TD, 1.8 i, 2.0 Di, 2.0 DTi, 2.0 i** 01/98 - 08/02 44 -118 kW	**36-130139**	**38-130465**	with standard chassis; Heavy Duty Version .
B3	**1.8 i, 2.0 Di, 2.0 i** 03/98 - 08/00 60 -118 kW	**36-130115**	**38-130366**	with standard chassis
B3	**1.7 TD, 2.0 DTi** 03/98 - 08/00 50 -74 kW	**36-130122**	**38-130366**	with standard chassis
B4	**1.4 i, 1.6 i, 1.6 i 16V, 1.7 TD, 1.8 i, 2.0 Di, 2.0 DTi, 2.0 i** 01/98 - 08/02 44 -118 kW	**21-030260** **11-101369** SP	**19-019956**	
B6 Sport	**1.4 i, 1.6 i, 1.6 i 16V, 1.7 TD, 1.8 i, 2.0 Di, 2.0 DTi, 2.0 i** 01/98 - 08/02 44 -118 kW	**34-030035**	**24-015523**	
B8	**1.4 i, 1.6 i, 1.6 i 16V, 1.7 TD, 1.8 i, 2.0 Di, 2.0 DTi, 2.0 i** 01/98 - 08/02 44 -118 kW	**34-181577**	**24-015523**	
B10	**1.4 i, 1.6 i, 1.6 i 16V, 1.7 TD, 1.8 i, 2.0 Di, 2.0 DTi, 2.0 i** 01/98 - 08/02 44 -118 kW	**46-111920**		Conditions see certificates; manual transmission VA: lowering (expertise): 60 mm; axle load to: 900 kg HA: lowering (expertise): 40 mm; axle load to: 800 kg

O

				i
OPEL				
OPEL ASTRA F CLASSIC Saloon				
B1	**1.4 i, 1.6 i, 1.6 i 16V** 01/98 - 08/02 44 -74 kW	**12-116812**		VA: with ball bearing
B2	**1.4 i, 1.6 i, 1.6 i 16V** 01/98 - 08/02 44 -74 kW	**16-031548** **11-101369** SP	**15-062215**	
B3	**1.4 i, 1.6 i, 1.6 i 16V** 01/98 - 08/02 44 -74 kW	**36-130481**	**38-130366**	with standard chassis
B3	**1.4 i, 1.6 i, 1.6 i 16V** 01/98 - 08/02 44 -74 kW	**36-130139**	**38-130465**	with standard chassis; Heavy Duty Version .
B4	**1.4 i, 1.6 i, 1.6 i 16V** 01/98 - 08/02 44 -74 kW	**21-030260** **11-101369** SP	**19-019956**	
B6 Sport	**1.4 i, 1.6 i, 1.6 i 16V** 01/98 - 08/02 44 -74 kW	**34-030035**	**24-015523**	
B8	**1.4 i, 1.6 i, 1.6 i 16V** 01/98 - 08/02 44 -74 kW	**34-181577**	**24-015523**	
B10	**1.4 i, 1.6 i, 1.6 i 16V** 01/98 - 08/02 44 -74 kW	**46-111920**		Conditions see certificates; manual transmission VA: lowering (expertise): 60 mm; axle load to: 900 kg HA: lowering (expertise): 40 mm; axle load to: 800 kg
OPEL ASTRA F CLASSIC Estate				
B1	**1.4 Comfort, 1.4 i, 1.6 i, 1.6 i 16V, 1.8** 02/03 - 01/05 44 -81 kW	**12-116812**		VA: with ball bearing
B2	**1.4 Comfort, 1.4 i, 1.6 i, 1.6 i 16V, 1.8** 02/03 - 01/05 44 -81 kW	**16-031548** **11-101369** SP	**15-069115**	
B3	**1.4 Comfort, 1.4 i, 1.6 i, 1.6 i 16V** 01/98 - 01/05 44 -74 kW	**36-130115**	**38-130380**	with standard chassis
B4	**1.4 Comfort, 1.4 i, 1.6 i, 1.6 i 16V, 1.8** 02/03 - 01/05 44 -81 kW	**21-030260** **11-101369** SP	**19-019956**	
B6 Sport	**1.4 Comfort, 1.4 i, 1.6 i, 1.6 i 16V, 1.8** 02/03 - 01/05 44 -81 kW	**34-030035**	**24-016476**	HA: firmer setting
B8	**1.4 Comfort, 1.4 i, 1.6 i, 1.6 i 16V, 1.8** 02/03 - 01/05 44 -81 kW	**34-181577**	**24-016483**	
OPEL ASTRA G Hatchback (F48_, F08_)				
B1	**1.0, 1.2 16V, 1.4, 1.4 16V, 1.6, 1.6 16V, 1.7 CDTI, 1.7 DTI 16V, 1.7 TD, 1.8, 1.8 16V, 2.0 16V, 2.0 16V OPC, 2.0 DI, 2.0 DTI 16V, 2.0 OPC, 2.2 16V, 2.2 DTI** 09/02 - 01/05 44 -147 kW	**12-117376**		VA: Hard Version; without ball bearing
B1	**1.0, 1.2 16V, 1.4, 1.4 16V, 1.6, 1.6 16V, 1.7 CDTI, 1.7 DTI 16V, 1.7 TD, 1.8, 1.8 16V, 2.0 16V, 2.0 16V OPC, 2.0 DI, 2.0 DTI 16V, 2.0 OPC, 2.2 16V, 2.2 DTI** 09/02 - 01/05 44 -147 kW	**12-117390**		VA: Soft Version; without ball bearing
B3	**1.0, 1.2 16V, 1.4, 1.4 16V** 02/98 - 01/05 44 -66 kW	**36-133925**	**38-130199**	with standard chassis
B3	**1.0, 1.2 16V, 1.4, 1.4 16V** 02/98 - 01/05 44 -66 kW	**36-130146**	**36-224067**	with standard chassis; Heavy Duty Version .
B3	**1.6, 1.6 16V** 02/98 - 01/05 55 -76 kW	**36-130146**	**38-130199**	with standard chassis

O

OPEL				
OPEL ASTRA G Hatchback (F48_, F08_)				
B3	**1.6, 1.6 16V** 02/98 - 01/05 55 -76 kW	**36-130153**	**36-224067**	with standard chassis; Heavy Duty Version .
B3	**1.8, 1.8 16V** 09/00 - 01/05 81 -92 kW	**36-130153**	**36-224067**	with standard chassis
B3	**1.8, 1.8 16V** 09/00 - 01/05 81 -92 kW	**36-130160**		with standard chassis; Heavy Duty Version .
B3	**2.0 16V, 2.2 16V** 02/98 - 01/05 100 -108 kW	**36-130160**	**36-224067**	with standard chassis
B3	**1.7 CDTI, 1.7 DTI 16V, 1.7 TD** 02/98 - 01/05 50 -59 kW	**36-154487**	**36-224067**	with standard chassis
B3	**1.7 CDTI, 1.7 DTI 16V, 1.7 TD** 02/98 - 01/05 50 -59 kW	**36-130160**		with standard chassis; Heavy Duty Version .
B3	**2.0 DI, 2.0 DTI 16V, 2.2 DTI** 02/98 - 01/05 60 -92 kW	**36-130160**	**36-224067**	with standard chassis
B4	**1.0, 1.2 16V, 1.4, 1.4 16V, 1.6, 1.6 16V, 1.7 CDTI, 1.7 DTI 16V, 1.7 TD, 1.8, 1.8 16V, 2.0 16V, 2.0 DI, 2.0 DTI 16V, 2.2 16V, 2.2 DTI** 09/02 - 01/05 44 -108 kW	**22-053060** **22-053077** **11-101512** SP	**19-068756** OIO	with standard chassis
B6 Sport	**1.0, 1.2 16V, 1.4, 1.4 16V, 1.6, 1.6 16V, 1.7 CDTI, 1.7 DTI 16V, 1.7 TD, 1.8, 1.8 16V, 2.0 16V, 2.0 16V OPC, 2.0 DI, 2.0 DTI 16V, 2.0 OPC, 2.2 16V, 2.2 DTI** 09/02 - 01/05 44 -147 kW	**35-044338**	**24-027823** OIO	
B8	**1.0, 1.2 16V, 1.4, 1.4 16V, 1.6, 1.6 16V, 1.7 CDTI, 1.7 DTI 16V, 1.7 TD, 1.8, 1.8 16V, 2.0 16V, 2.0 16V OPC, 2.0 DI, 2.0 DTI 16V, 2.0 OPC, 2.2 16V, 2.2 DTI** 09/02 - 01/05 44 -147 kW	**35-044345**	**24-027830** OIO	
B8	**1.2 16V** 02/98 - 09/00 48 kW	**35-044345**	**24-027830** OIO	
B12 PK	**1.2 16V, 1.4, 1.4 16V, 1.6, 1.6 16V** 02/98 - 01/05 48 -76 kW	**46-188984**		Conditions see certificates VA: lowering (expertise): 30 mm; axle load to: 845 kg HA: lowering (expertise): 30 mm; axle load to: 820 kg
B12 PK	**1.4, 1.4 16V, 1.6, 1.6 16V, 1.7 CDTI, 1.7 DTI 16V, 1.7 TD, 1.8, 1.8 16V, 2.0 16V** 02/98 - 12/09 50 -100 kW	**46-188946**		Conditions see certificates VA: lowering (expertise): 30 mm; axle load to: 935 kg HA: lowering (expertise): 30 mm; axle load to: 820 kg
B12 PK	**1.7 CDTI, 1.7 DTI 16V, 1.7 TD, 1.8 16V, 2.0 16V, 2.0 DI, 2.0 DTI 16V, 2.2 16V, 2.2 DTI** 09/02 - 01/05 50 -108 kW	**46-188960**		Conditions see certificates VA: lowering (expertise): 30 mm; axle load to: 1035 kg HA: lowering (expertise): 30 mm; axle load to: 820 kg
B12 SL	**1.2 16V, 1.4, 1.4 16V, 1.6, 1.6 16V, 1.8, 1.8 16V, 2.0 16V, 2.0 16V OPC, 2.0 OPC, 2.2 16V** 02/98 - 01/05 48 -147 kW	**46-188939**		Conditions see certificates VA: lowering (expertise): 45-50 mm; axle load to: 965 kg HA: lowering (expertise): 30 mm; axle load to: 895 kg
B14	**1.0, 1.2 16V, 1.4, 1.4 16V, 1.6, 1.6 16V, 1.7 CDTI, 1.7 DTI 16V, 1.7 TD, 1.8, 1.8 16V, 2.0 16V, 2.0 16V OPC, 2.0 DI, 2.0 DTI 16V, 2.0 OPC, 2.2 16V, 2.2 DTI** 09/02 - 01/05 44 -147 kW	**47-087484**		Conditions see certificates VA: lowering (expertise): 40-50 mm; axle load to: 1040 kg HA: lowering (expertise): 25-45 mm; axle load to: 885 kg

OPEL				
OPEL ASTRA G Saloon (F69_)				
B1	**1.2 16V, 1.4, 1.4 16V, 1.6, 1.6 16V, 1.7 CDTI, 1.7 DTI 16V, 1.7 TD, 1.8, 1.8 16V, 2.0 16V, 2.0 DI, 2.0 DTI 16V, 2.2 16V, 2.2 DTI** 09/98 - 01/05 48 -108 kW	**12-117376**		VA: Hard Version; without ball bearing
B1	**1.2 16V, 1.4, 1.4 16V, 1.6, 1.6 16V, 1.7 CDTI, 1.7 DTI 16V, 1.7 TD, 1.8, 1.8 16V, 2.0 16V, 2.0 DI, 2.0 DTI 16V, 2.2 16V, 2.2 DTI** 09/98 - 01/05 48 -108 kW	**12-117390**		VA: Soft Version; without ball bearing
B3	**1.2 16V, 1.4, 1.4 16V** 09/98 - 01/05 48 -66 kW	**36-133925**	**38-130199**	with standard chassis
B3	**1.2 16V, 1.4, 1.4 16V** 09/98 - 01/05 48 -66 kW	**36-130146**	**36-224067**	with standard chassis; Heavy Duty Version .
B3	**1.6, 1.6 16V** 09/98 - 01/05 55 -76 kW	**36-130146**	**38-130199**	with standard chassis
B3	**1.6, 1.6 16V** 09/98 - 01/05 55 -76 kW	**36-130153**	**36-224067**	with standard chassis; Heavy Duty Version .
B3	**1.8, 1.8 16V** 09/00 - 01/05 81 -92 kW	**36-130153**	**36-224067**	with standard chassis
B3	**1.8, 1.8 16V** 09/00 - 01/05 81 -92 kW	**36-130160**		with standard chassis; Heavy Duty Version .
B3	**2.0 16V, 2.0 DI, 2.0 DTI 16V, 2.2 16V, 2.2 DTI** 09/98 - 01/05 60 -108 kW	**36-130160**	**36-224067**	with standard chassis
B3	**1.7 CDTI, 1.7 DTI 16V, 1.7 TD** 09/98 - 01/05 50 -59 kW	**36-154487**	**36-224067**	with standard chassis
B3	**1.7 CDTI, 1.7 DTI 16V, 1.7 TD** 09/98 - 01/05 50 -59 kW	**36-130160**		with standard chassis; Heavy Duty Version .
B4	**1.2 16V, 1.4, 1.4 16V, 1.6, 1.6 16V, 1.7 CDTI, 1.7 DTI 16V, 1.7 TD, 1.8, 1.8 16V, 2.0 16V, 2.0 DI, 2.0 DTI 16V, 2.2 16V, 2.2 DTI** 09/98 - 01/05 48 -108 kW	**22-053060** **22-053077** **11-101512** SP	**19-068756**	with standard chassis
B6 Sport	**1.2 16V, 1.4, 1.4 16V, 1.6, 1.6 16V, 1.7 CDTI, 1.7 DTI 16V, 1.7 TD, 1.8, 1.8 16V, 2.0 16V, 2.0 DI, 2.0 DTI 16V, 2.2 16V, 2.2 DTI** 09/98 - 01/05 48 -108 kW	**35-044338**	**24-027823**	
B8	**1.2 16V, 1.4, 1.4 16V, 1.6, 1.6 16V, 1.7 CDTI, 1.7 DTI 16V, 1.7 TD, 1.8, 1.8 16V, 2.0 16V, 2.0 DI, 2.0 DTI 16V, 2.2 16V, 2.2 DTI** 09/98 - 01/05 48 -108 kW	**35-044345**	**24-027830**	
B12 PK	**1.2 16V, 1.4, 1.4 16V, 1.6, 1.6 16V** 09/98 - 01/05 48 -76 kW	**46-188984**		Conditions see certificates VA: lowering (expertise): 30 mm; axle load to: 845 kg HA: lowering (expertise): 30 mm; axle load to: 820 kg
B12 PK	**1.4, 1.4 16V, 1.6, 1.6 16V, 1.7 CDTI, 1.7 DTI 16V, 1.7 TD, 1.8, 1.8 16V, 2.0 16V** 09/98 - 12/09 50 -100 kW	**46-188946**		Conditions see certificates VA: lowering (expertise): 30 mm; axle load to: 935 kg HA: lowering (expertise): 30 mm; axle load to: 820 kg
B12 PK	**1.7 CDTI, 1.7 DTI 16V, 1.7 TD, 1.8, 1.8 16V, 2.0 16V, 2.0 DI, 2.0 DTI 16V, 2.2 16V, 2.2 DTI** 09/02 - 01/05 50 -108 kW	**46-188960**		Conditions see certificates VA: lowering (expertise): 30 mm; axle load to: 1035 kg HA: lowering (expertise): 30 mm; axle load to: 820 kg

O

OPEL

OPEL ASTRA G Saloon (F69_)

B12 SL	**1.2 16V, 1.4, 1.4 16V, 1.6, 1.6 16V, 1.8, 1.8 16V, 2.0 16V, 2.2 16V** 09/98 - 01/05 48 -108 kW	**46-188939**		Conditions see certificates VA: lowering (expertise): 45-50 mm; axle load to: 965 kg HA: lowering (expertise): 30 mm; axle load to: 895 kg

OPEL ASTRA G Estate (F35_)

B1	**1.2 16V, 1.4, 1.4 16V, 1.6, 1.6 16V, 1.6 CNG, 1.7 CDTI, 1.7 DTI 16V, 1.7 TD, 1.8 16V, 2.0 16V, 2.0 DI, 2.0 DTI 16V, 2.0 OPC, 2.2 16V, 2.2 DTI** 02/98 - 07/04 48 -147 kW	**12-117376**		VA: Hard Version; without ball bearing
B1	**1.2 16V, 1.4, 1.4 16V, 1.6, 1.6 16V, 1.6 CNG, 1.7 CDTI, 1.7 DTI 16V, 1.7 TD, 1.8 16V, 2.0 16V, 2.0 DI, 2.0 DTI 16V, 2.0 OPC, 2.2 16V, 2.2 DTI** 02/98 - 07/04 48 -147 kW	**12-117390**		VA: Soft Version; without ball bearing
B3	**1.2 16V, 1.4, 1.4 16V** 02/98 - 07/04 48 -66 kW	**36-133925**	**38-130236**	with standard chassis; without ride height adjustment
B3	**1.2 16V, 1.4, 1.4 16V** 02/98 - 07/04 48 -66 kW	**36-130146**	**38-130243**	with standard chassis; Heavy Duty Version .; without ride height adjustment
B3	**1.6, 1.6 16V** 02/98 - 07/04 55 -76 kW	**36-130146**	**38-130236**	with standard chassis; without ride height adjustment
B3	**1.6, 1.6 16V** 02/98 - 07/04 55 -76 kW	**36-130153**	**38-130243**	with standard chassis; Heavy Duty Version .; without ride height adjustment
B3	**1.8 16V** 02/98 - 07/04 85 -92 kW	**36-130153**	**38-130243**	with standard chassis; without ride height adjustment
B3	**1.8 16V** 02/98 - 07/04 85 -92 kW	**36-130160**		with standard chassis; Heavy Duty Version .
B3	**2.0 16V, 2.0 DI, 2.0 DTI 16V, 2.2 16V, 2.2 DTI** 02/98 - 07/04 60 -108 kW	**36-130160**	**38-130243**	with standard chassis; without ride height adjustment
B3	**1.7 CDTI, 1.7 DTI 16V, 1.7 TD** 02/98 - 07/09 50 -59 kW	**36-154487**	**38-130243**	with standard chassis; without ride height adjustment
B3	**1.7 CDTI, 1.7 DTI 16V, 1.7 TD** 02/98 - 07/09 50 -59 kW	**36-130160**		with standard chassis; Heavy Duty Version .
B4	**1.2 16V, 1.4, 1.4 16V, 1.6, 1.6 16V, 1.6 CNG, 1.7 CDTI, 1.7 DTI 16V, 1.7 TD, 1.8 16V, 2.0 16V, 2.0 DI, 2.0 DTI 16V, 2.2 16V, 2.2 DTI** 02/98 - 07/04 48 -108 kW	**22-053060** **22-053077** **11-101512** SP	**19-068763** OIO	with standard chassis; without ride height adjustment
B6 Sport	**1.2 16V, 1.4, 1.4 16V, 1.6, 1.6 16V, 1.6 CNG, 1.7 CDTI, 1.7 DTI 16V, 1.7 TD, 1.8 16V, 2.0 16V, 2.0 DI, 2.0 DTI 16V, 2.0 OPC, 2.2 16V, 2.2 DTI** 02/98 - 07/04 48 -147 kW	**35-044338**	**24-027847** OIO	without ride height adjustment
B8	**1.2 16V, 1.4, 1.4 16V, 1.6, 1.6 16V, 1.7 CDTI, 1.7 DTI 16V, 1.7 TD, 1.8 16V, 2.0 16V, 2.0 DI, 2.0 DTI 16V, 2.0 OPC, 2.2 16V, 2.2 DTI** 02/98 - 07/04 48 -147 kW	**35-044345**	**24-027823** OIO	without ride height adjustment
B12 PK	**1.2 16V, 1.4, 1.4 16V, 1.6, 1.6 16V** 02/98 - 07/04 48 -76 kW	**46-188991**		without ride height adjustment; Conditions see certificates VA: lowering (expertise): 30 mm; axle load to: 845 kg HA: lowering (expertise): 30 mm; axle load to: 885 kg
B12 PK	**1.4, 1.4 16V, 1.6, 1.6 16V, 1.7 DTI 16V, 1.7 TD, 1.8 16V, 2.0 16V** 02/98 - 12/09 50 -100 kW	**46-188953**		without ride height adjustment; Conditions see certificates VA: lowering (expertise): 30 mm; axle load to: 935 kg HA: lowering (expertise): 30 mm; axle load to: 885 kg

OPEL				
OPEL ASTRA G Estate (F35_)				
B12 PK	**1.7 DTI 16V, 1.7 TD, 1.8 16V, 2.0 16V, 2.0 DI, 2.0 DTI 16V, 2.2 16V, 2.2 DTI** 08/99 - 07/04 50 -108 kW	**46-188977**		without ride height adjustment; Conditions see certificates VA: lowering (expertise): 30 mm; axle load to: 1035 kg HA: lowering (expertise): 30 mm; axle load to: 885 kg
OPEL ASTRA G Coupe (F07_)				
B1	**1.6 16V, 1.8 16V, 2.0 16V Turbo, 2.2 16V, 2.2 DTI** 03/00 - 05/05 74 -147 kW	**12-117376**		VA: Hard Version; without ball bearing
B1	**1.6 16V, 1.8 16V, 2.0 16V Turbo, 2.2 16V, 2.2 DTI** 03/00 - 05/05 74 -147 kW	**12-117390**		VA: Soft Version; without ball bearing
B3	**1.6 16V** 03/00 - 05/05 74 -76 kW	**36-130146**	**38-130199**	with standard chassis
B3	**1.6 16V** 03/00 - 05/05 74 -76 kW	**36-130153**	**36-224067**	with standard chassis; Heavy Duty Version .
B3	**1.8 16V** 03/00 - 05/05 85 -92 kW	**36-130153**	**36-224067**	with standard chassis
B3	**1.8 16V** 03/00 - 05/05 85 -92 kW	**36-130160**		with standard chassis; Heavy Duty Version .
B3	**2.0 16V Turbo, 2.2 16V, 2.2 DTI** 09/00 - 05/05 92 -147 kW	**36-130160**	**36-224067**	with standard chassis
B4	**1.6 16V, 1.8 16V, 2.2 16V, 2.2 DTI** 03/00 - 05/05 74 -108 kW	**22-053060** **22-053077** **11-101512** SP	**19-068756** OIO	
B6 Sport	**1.6 16V, 1.8 16V, 2.0 16V Turbo, 2.2 16V, 2.2 DTI** 03/00 - 05/05 74 -147 kW	**35-044338**	**24-027823** OIO	
B8	**1.6 16V, 1.8 16V, 2.0 16V Turbo, 2.2 16V, 2.2 DTI** 03/00 - 05/05 74 -147 kW	**35-044345**	**24-027830** OIO	
B12 PK	**1.6 16V, 1.8 16V, 2.0 16V Turbo, 2.2 16V** 03/00 - 05/05 74 -147 kW	**46-188892**		Conditions see certificates VA: lowering (expertise): 30 mm; axle load to: 1015 kg HA: lowering (expertise): 30 mm; axle load to: 780 kg
B12 PK	**2.2 DTI** 09/02 - 05/05 92 kW	**46-188915**		Conditions see certificates VA: lowering (expertise): 30 mm; axle load to: 1040 kg HA: lowering (expertise): 30 mm; axle load to: 780 kg
OPEL ASTRA G Convertible				
B1	**1.6, 1.6 16V, 1.8 16V, 2.0 16V Turbo, 2.0 OPC, 2.2 16V, 2.2 DTI** 09/02 - 10/05 74 -147 kW	**12-117376**		VA: Hard Version; without ball bearing
B1	**1.6, 1.6 16V, 1.8 16V, 2.0 16V Turbo, 2.0 OPC, 2.2 16V, 2.2 DTI** 09/02 - 10/05 74 -147 kW	**12-117390**		VA: Soft Version; without ball bearing
B3	**1.6, 1.6 16V** 03/01 - 10/05 74 -76 kW	**36-130146**	**38-130243**	with standard chassis
B3	**1.6, 1.6 16V** 03/01 - 10/05 74 -76 kW	**36-130153**		with standard chassis; Heavy Duty Version .
B3	**1.8 16V** 03/01 - 10/05 92 kW	**36-130153**	**38-130243**	with standard chassis
B3	**1.8 16V** 03/01 - 10/05 92 kW	**36-130160**		with standard chassis; Heavy Duty Version .

OPEL

OPEL ASTRA G Convertible

B3	**2.0 16V Turbo, 2.2 16V, 2.2 DTI** 09/02 - 10/05 92 -147 kW	**36-130160**	**38-130243**	with standard chassis
B4	**1.6, 1.6 16V, 1.8 16V, 2.0 16V Turbo, 2.2 16V, 2.2 DTI** 09/02 - 10/05 74 -147 kW	**22-053060** **22-053077** **11-101512** SP	**19-068756** OIO	
B6 Sport	**1.6, 1.6 16V, 1.8 16V, 2.0 16V Turbo, 2.0 OPC, 2.2 16V, 2.2 DTI** 09/02 - 10/05 74 -147 kW	**35-044338**	**24-027823** OIO	
B8	**1.6, 1.6 16V, 1.8 16V, 2.0 16V Turbo, 2.0 OPC, 2.2 16V, 2.2 DTI** 09/02 - 10/05 74 -147 kW	**35-044345**	**24-027830** OIO	
B12 PK	**1.6, 1.6 16V, 1.8 16V, 2.0 16V Turbo, 2.2 16V** 03/01 - 10/05 74 -147 kW	**46-188908**		Conditions see certificates VA: lowering (expertise): 30 mm; axle load to: 1015 kg HA: lowering (expertise): 30 mm; axle load to: 845 kg
B12 PK	**2.2 DTI** 09/02 - 10/05 92 kW	**46-188922**		Conditions see certificates VA: lowering (expertise): 30 mm; axle load to: 1040 kg HA: lowering (expertise): 30 mm; axle load to: 845 kg

OPEL ASTRA G Box (F70)

B1	**1.6, 1.7 TD, 2.0 DI** 01/99 - 04/05 50 -62 kW	**12-117376**		VA: Hard Version; without ball bearing
B1	**1.6, 1.7 TD, 2.0 DI** 01/99 - 04/05 50 -62 kW	**12-117390**		VA: Soft Version; without ball bearing
B3	**1.6** 01/99 - 04/05 55 -62 kW	**36-130146**	**38-130236**	with standard chassis
B3	**1.6** 01/99 - 04/05 55 -62 kW	**36-130153**	**38-130243**	with standard chassis; Heavy Duty Version .
B3	**1.7 TD** 01/99 - 04/05 50 kW	**36-154487**	**38-130243**	with standard chassis
B3	**1.7 TD** 01/99 - 04/05 50 kW	**36-130160**		with standard chassis; Heavy Duty Version .
B3	**2.0 DI** 01/99 - 04/05 60 kW	**36-130160**	**38-130243**	with standard chassis
B4	**1.6, 1.7 TD, 2.0 DI** 01/99 - 04/05 50 -62 kW	**22-053060** **22-053077** **11-101512** SP	**19-068756** OIO	
B6 Sport	**1.6, 1.7 TD, 2.0 DI** 01/99 - 04/05 50 -62 kW	**35-044338**	**24-027847** OIO	without ride height adjustment

OPEL ASTRA H

B1	**1.2, 1.4, 1.4 LPG, 1.6, 1.8, 2.0 Turbo** 03/05 - 48 -177 kW	**12-224449**		VA: with ball bearing
B1	**1.6, 1.8** 01/06 - 85 -103 kW	**12-224449**		VA: with ball bearing; Engine Code: Z16XER
B1	**1.3 CDTI, 1.6 Turbo, 1.7 CDTI, 1.9 CDTI, 1.9 CDTI 16V, 2.0 Turbo** 09/04 - 59 -147 kW	**12-224449**		VA: with ball bearing; without lowered chassis
B1	**1.3 CDTI, 1.6 Turbo, 1.7 CDTI, 1.9 CDTI, 1.9 CDTI 16V, 2.0 Turbo** 09/04 - 59 -147 kW	**12-224456**		VA: with ball bearing; with lowered chassis

OPEL				
OPEL ASTRA H				
B3	**1.2, 1.4, 1.4 LPG, 1.6** 03/04 - 48 -85 kW	**37-163570**	**38-163531**	with standard chassis
B3	**1.2, 1.4, 1.4 LPG, 1.6** 03/04 - 48 -85 kW	**37-163563**	**38-163524**	with standard chassis; Heavy Duty Version .
B3	**1.6 Turbo** 02/07 - 132 kW	**37-163563**	**38-163531**	with standard chassis
B3	**1.6 Turbo** 02/07 - 132 kW	**37-163556**	**38-163524**	with standard chassis; Heavy Duty Version .
B3	**1.8** 03/04 - 92 -103 kW	**37-163563**	**38-163531**	with standard chassis
B3	**1.8** 03/04 - 92 -103 kW	**37-163549**	**38-163524**	with standard chassis; Heavy Duty Version .
B3	**1.3 CDTI, 1.7 CDTI** 03/04 - 59 -92 kW	**37-163549**	**38-163531**	with standard chassis
B3	**1.3 CDTI, 1.7 CDTI** 03/04 - 59 -92 kW	**37-163556**	**38-163524**	with standard chassis; Heavy Duty Version .
B3	**1.9 CDTI, 1.9 CDTI 16V, 2.0 Turbo** 03/05 - 74 -177 kW	**37-163556**	**38-163531**	with standard chassis
B3	**1.9 CDTI, 1.9 CDTI 16V, 2.0 Turbo** 03/05 - 74 -177 kW		**38-163524**	with standard chassis; Heavy Duty Version .
B4	**1.2, 1.3 CDTI, 1.4, 1.4 LPG, 1.6, 1.6 Turbo, 1.7 CDTI, 1.8, 1.9 CDTI, 1.9 CDTI 16V, 2.0 Turbo** 03/05 - 48 -177 kW	**22-141590** **22-141606** i.V. SP	**19-141619** OIO	without electronic suspension control; without IDS+ suspension
B6 Sport	**1.2, 1.3 CDTI, 1.4, 1.4 LPG, 1.6, 1.6 Turbo, 1.7 CDTI, 1.8, 1.9 CDTI, 1.9 CDTI 16V, 2.0 Turbo** 03/05 - 48 -177 kW	**35-114635** **35-114642**	**24-114653** OIO	without IDS+ suspension
B8	**1.2, 1.3 CDTI, 1.4, 1.4 LPG, 1.6, 1.6 Turbo, 1.7 CDTI, 1.8, 1.9 CDTI, 1.9 CDTI 16V, 2.0 Turbo** 03/05 - 48 -177 kW	**35-114666** **35-114673**	**24-114684** OIO	without IDS+ suspension
B12 PK	**1.4, 1.4 LPG, 1.6, 1.8** 03/04 - 55 -103 kW	**46-182128**		disconect ITS+; Conditions see certificates VA: lowering (expertise): 30 mm; axle load to: 970 kg HA: without ride height adjustment; lowering (expertise): 30 mm; axle load to: 860 kg
B12 PK	**1.3 CDTI, 1.6 Turbo, 1.7 CDTI, 1.9 CDTI, 1.9 CDTI 16V, 2.0 Turbo** 03/05 - 59 -177 kW	**46-182135**		disconect ITS+; Conditions see certificates VA: lowering (expertise): 30 mm; axle load to: 1075 kg HA: without ride height adjustment; lowering (expertise): 30 mm; axle load to: 860 kg
B12 SL	**1.4, 1.4 LPG, 1.6, 1.8** 03/04 - 55 -103 kW	**46-182166**		disconect ITS+; Conditions see certificates VA: lowering (expertise): 45-50 mm; axle load to: 960 kg HA: without ride height adjustment; lowering (expertise): 30 mm; axle load to: 860 kg
B12 SL	**1.3 CDTI, 1.6 Turbo, 1.7 CDTI, 2.0 Turbo** 03/05 - 59 -177 kW	**46-182173**		disconect ITS+; Conditions see certificates VA: lowering (expertise): 45-50 mm; axle load to: 1025 kg HA: without ride height adjustment; lowering (expertise): 30 mm; axle load to: 860 kg
B14	**1.2, 1.3 CDTI, 1.4, 1.4 LPG, 1.6, 1.6 Turbo, 1.7 CDTI, 1.8, 1.9 CDTI, 1.9 CDTI 16V, 2.0 Turbo** 03/05 - 48 -177 kW	**47-121133**		disconect ITS+; Conditions see certificates VA: lowering (expertise): 30-50 mm; axle load to: 1060 kg HA: lowering (expertise): 30-50 mm; axle load to: 860 kg
OPEL ASTRA H Saloon				
B1	**1.7 CDTi** 02/07 - 81 kW	**12-224449**		VA: with ball bearing

OPEL				
OPEL ASTRA H Saloon				
B3	**1.6** 02/07 - 85 kW	**37-163563**	**38-163531**	with standard chassis
B3	**1.6** 02/07 - 85 kW	**37-163549**	**38-163524**	with standard chassis; Heavy Duty Version .
B3	**1.8** 02/07 - 103 kW	**37-163563**	**38-163531**	with standard chassis
B3	**1.8** 02/07 - 103 kW	**37-163549**	**38-163524**	with standard chassis; Heavy Duty Version .
B3	**1.3 CDTi, 1.7 CDTi** 02/07 - 66 -81 kW	**37-163549**	**38-163531**	with standard chassis
B3	**1.3 CDTi, 1.7 CDTi** 02/07 - 66 -81 kW	**37-163556**	**38-163524**	with standard chassis; Heavy Duty Version .
B4	**1.3 CDTi, 1.6, 1.7 CDTi, 1.8** 02/07 - 66 -103 kW	**22-141590** **22-141606** i.V. *SP*	**19-141626** OIO	without electronic suspension control; without IDS+ suspension
B6 Sport	**1.3 CDTi, 1.6, 1.7 CDTi, 1.8** 02/07 - 66 -103 kW	**35-114635** **35-114642**	**24-114653** OIO	without IDS+ suspension
B8	**1.3 CDTi, 1.6, 1.7 CDTi, 1.8** 02/07 - 66 -103 kW	**35-114666** **35-114673**	**24-114684** OIO	without IDS+ suspension
B12 PK	**1.6, 1.8** 02/07 - 85 -103 kW	**46-182128**		disconect ITS+; Conditions see certificates VA: lowering (expertise): 30 mm; axle load to: 970 kg HA: without ride height adjustment; lowering (expertise): 30 mm; axle load to: 860 kg
B12 PK	**1.3 CDTi, 1.7 CDTi** 02/07 - 66 -81 kW	**46-182135**		disconect ITS+; Conditions see certificates VA: lowering (expertise): 30 mm; axle load to: 1075 kg HA: without ride height adjustment; lowering (expertise): 30 mm; axle load to: 860 kg
B12 SL	**1.6, 1.8** 02/07 - 85 -103 kW	**46-182166**		disconect ITS+; Conditions see certificates VA: lowering (expertise): 45-50 mm; axle load to: 960 kg HA: without ride height adjustment; lowering (expertise): 30 mm; axle load to: 860 kg
B12 SL	**1.3 CDTi, 1.7 CDTi** 02/07 - 66 -81 kW	**46-182173**		disconect ITS+; Conditions see certificates VA: lowering (expertise): 45-50 mm; axle load to: 1025 kg HA: without ride height adjustment; lowering (expertise): 30 mm; axle load to: 860 kg
OPEL ASTRA H GTC				
B1	**1.2, 1.4, 1.6, 1.8** 01/06 - 48 -103 kW	**12-224449**		VA: with ball bearing
B1	**1.3 CDTI, 1.6 Turbo, 1.7 CDTI, 1.9 CDTI, 1.9 CDTi 16V, 2.0 Turbo** 03/05 - 59 -177 kW	**12-224449**		VA: with ball bearing; without lowered chassis
B1	**1.3 CDTI, 1.6 Turbo, 1.7 CDTI, 1.9 CDTI, 1.9 CDTi 16V, 2.0 Turbo** 03/05 - 59 -177 kW	**12-224456**		VA: with ball bearing; with lowered chassis
B3	**1.2, 1.4, 1.6** 03/05 - 48 -85 kW	**37-163570**	**38-163531**	with standard chassis
B3	**1.2, 1.4, 1.6** 03/05 - 48 -85 kW	**37-163563**	**38-163524**	with standard chassis; Heavy Duty Version .
B3	**1.6 Turbo** 02/07 - 132 kW	**37-163563**	**38-163531**	with standard chassis
B3	**1.6 Turbo** 02/07 - 132 kW	**37-163556**	**38-163524**	with standard chassis; Heavy Duty Version .

0

OPEL				
OPEL ASTRA H GTC				
B3	**1.8** 03/05 - 92 -103 kW	**37-163563**	**38-163531**	with standard chassis
B3	**1.8** 03/05 - 92 -103 kW	**37-163549**	**38-163524**	with standard chassis; Heavy Duty Version .
B3	**1.3 CDTI, 1.7 CDTI** 03/05 - 59 -92 kW	**37-163549**	**38-163531**	with standard chassis
B3	**1.3 CDTI, 1.7 CDTI** 03/05 - 59 -92 kW	**37-163556**	**38-163524**	with standard chassis; Heavy Duty Version .
B3	**1.9 CDTI, 1.9 CDTi 16V, 2.0 Turbo** 08/05 - 74 -177 kW	**37-163556**	**38-163531**	with standard chassis
B3	**1.9 CDTI, 1.9 CDTi 16V, 2.0 Turbo** 08/05 - 74 -177 kW		**38-163524**	with standard chassis; Heavy Duty Version .
B4	**1.2, 1.3 CDTI, 1.4, 1.6, 1.6 Turbo, 1.7 CDTI, 1.8, 1.9 CDTI, 1.9 CDTi 16V, 2.0 Turbo** 08/05 - 48 -177 kW	**22-141590** **22-141606** i.V. SP	**19-141619** OIO	without electronic suspension control; without IDS+ suspension
B6 Sport	**1.2, 1.3 CDTI, 1.4, 1.6, 1.6 Turbo, 1.7 CDTI, 1.8, 1.9 CDTI, 1.9 CDTi 16V, 2.0 Turbo** 08/05 - 48 -177 kW	**35-114635** **35-114642**	**24-114653** OIO	without IDS+ suspension
B8	**1.2, 1.3 CDTI, 1.4, 1.6, 1.6 Turbo, 1.7 CDTI, 1.8, 1.9 CDTI, 1.9 CDTi 16V, 2.0 Turbo** 08/05 - 48 -177 kW	**35-114666** **35-114673**	**24-114684** OIO	without IDS+ suspension
B12 PK	**1.4, 1.6, 1.8** 03/05 - 55 -103 kW	**46-182128**		disconect ITS+; Conditions see certificates VA: lowering (expertise): 30 mm; axle load to: 970 kg HA: lowering (expertise): 30 mm; axle load to: 860 kg
B12 PK	**1.3 CDTI, 1.6 Turbo, 1.7 CDTI, 1.9 CDTI, 1.9 CDTi 16V, 2.0 Turbo** 03/05 - 59 -177 kW	**46-182135**		disconect ITS+; Conditions see certificates VA: lowering (expertise): 30 mm; axle load to: 1075 kg HA: lowering (expertise): 30 mm; axle load to: 860 kg
B12 SL	**1.4, 1.6, 1.8** 03/05 - 55 -103 kW	**46-182166**		disconect ITS+; Conditions see certificates VA: lowering (expertise): 45-50 mm; axle load to: 960 kg HA: lowering (expertise): 30 mm; axle load to: 860 kg
B12 SL	**1.3 CDTI, 1.6 Turbo, 1.7 CDTI, 2.0 Turbo** 03/05 - 59 -177 kW	**46-182173**		disconect ITS+; Conditions see certificates VA: lowering (expertise): 45-50 mm; axle load to: 1025 kg HA: lowering (expertise): 30 mm; axle load to: 860 kg
B14	**1.2, 1.3 CDTI, 1.4, 1.6, 1.6 Turbo, 1.7 CDTI, 1.8, 1.9 CDTI, 1.9 CDTi 16V, 2.0 Turbo** 08/05 - 48 -177 kW	**47-121133**		disconect ITS+; Conditions see certificates VA: lowering (expertise): 30-50 mm; axle load to: 1060 kg HA: lowering (expertise): 30-50 mm; axle load to: 860 kg
OPEL ASTRA H Estate				
B1	**1.4, 1.4 LPG, 1.6, 1.6 LPG, 1.8** 08/04 - 55 -92 kW	**12-224449**		VA: with ball bearing
B1	**1.8** 08/05 - 103 kW	**12-224449**		VA: with ball bearing; Engine Code: Z18XER
B1	**1.3 CDTI, 1.6 Turbo, 1.7 CDTI, 1.9 CDTI, 1.9 CDTI 16V, 2.0 Turbo** 09/04 - 59 -147 kW	**12-224449**		VA: with ball bearing; without lowered chassis
B1	**1.3 CDTI, 1.6 Turbo, 1.7 CDTI, 1.9 CDTI, 1.9 CDTI 16V, 2.0 Turbo** 09/04 - 59 -147 kW	**12-224456**		VA: with ball bearing; with lowered chassis
B3	**1.4, 1.4 LPG, 1.6, 1.6 LPG** 08/04 - 55 -85 kW	**37-163570**	**38-162374**	with standard chassis

OPEL				
OPEL ASTRA H Estate				
B3	**1.4, 1.4 LPG, 1.6, 1.6 LPG** 08/04 - 55 -85 kW	**37-163563**	**38-162350**	with standard chassis; Heavy Duty Version .
B3	**1.4, 1.4 LPG, 1.6, 1.6 LPG** 08/04 - 55 -85 kW		**38-162367**	with standard chassis; with ride height adjustment
B3	**1.6 Turbo** 02/07 - 132 kW	**37-163563**	**38-162374**	with standard chassis
B3	**1.6 Turbo** 02/07 - 132 kW	**37-163556**	**38-162350**	with standard chassis; Heavy Duty Version .
B3	**1.6 Turbo** 02/07 - 132 kW		**38-162367**	with standard chassis; with ride height adjustment
B3	**1.8** 08/04 - 92 -103 kW	**37-163563**	**38-162374**	with standard chassis
B3	**1.8** 08/04 - 92 -103 kW	**37-163549**	**38-162350**	with standard chassis; Heavy Duty Version .
B3	**1.8** 08/04 - 92 -103 kW		**38-162367**	with standard chassis; with ride height adjustment
B3	**1.3 CDTI, 1.7 CDTI** 08/04 - 59 -92 kW	**37-163549**	**38-162374**	with standard chassis
B3	**1.3 CDTI, 1.7 CDTI** 08/04 - 59 -92 kW	**37-163556**	**38-162350**	with standard chassis; Heavy Duty Version .
B3	**1.3 CDTI, 1.7 CDTI** 08/04 - 59 -92 kW		**38-162367**	with standard chassis; with ride height adjustment
B3	**1.9 CDTI, 1.9 CDTI 16V, 2.0 Turbo** 09/04 - 74 -147 kW	**37-163556**	**38-162374**	with standard chassis
B3	**1.9 CDTI, 1.9 CDTI 16V, 2.0 Turbo** 09/04 - 74 -147 kW		**38-162350**	with standard chassis; Heavy Duty Version .
B3	**1.9 CDTI, 1.9 CDTI 16V, 2.0 Turbo** 09/04 - 74 -147 kW		**38-162367**	with standard chassis; with ride height adjustment
B4	**1.3 CDTI, 1.4, 1.4 LPG, 1.6, 1.6 LPG, 1.6 Turbo, 1.7 CDTI, 1.8, 1.9 CDTI, 1.9 CDTI 16V, 2.0 Turbo** 09/04 - 55 -147 kW	**22-141590** **22-141606** **i.V.** SP	**19-141626** OIO	without electronic suspension control; without IDS+ suspension
B6 Sport	**1.3 CDTI, 1.4, 1.4 LPG, 1.6, 1.6 LPG, 1.6 Turbo, 1.7 CDTI, 1.8, 1.9 CDTI, 1.9 CDTI 16V, 2.0 Turbo** 09/04 - 55 -147 kW	**35-114635** **35-114642**	**24-114653** OIO	without IDS+ suspension
B8	**1.3 CDTI, 1.4, 1.4 LPG, 1.6, 1.6 LPG, 1.6 Turbo, 1.7 CDTI, 1.8, 1.9 CDTI, 1.9 CDTI 16V, 2.0 Turbo** 09/04 - 55 -147 kW	**35-114666** **35-114673**	**24-114684** OIO	without IDS+ suspension
B12 PK	**1.4, 1.4 LPG, 1.6, 1.6 LPG, 1.8** 08/04 - 55 -103 kW	**46-182142**		disconect ITS+; Conditions see certificates VA: lowering (expertise): 30-35 mm; axle load to: 970 kg HA: without ride height adjustment; lowering (expertise): 25-30 mm; axle load to: 940 kg
B12 PK	**1.3 CDTI, 1.6 Turbo, 1.7 CDTI, 1.9 CDTI, 1.9 CDTI 16V, 2.0 Turbo** 09/04 - 59 -147 kW	**46-182159**		disconect ITS+; Conditions see certificates VA: lowering (expertise): 30-35 mm; axle load to: 1075 kg HA: without ride height adjustment; lowering (expertise): 25-30 mm; axle load to: 940 kg
B12 SL	**1.4, 1.4 LPG, 1.6, 1.6 LPG, 1.8** 08/04 - 55 -103 kW	**46-182180**		disconect ITS+; Conditions see certificates VA: lowering (expertise): 40-45 mm; axle load to: 960 kg HA: without ride height adjustment; lowering (expertise): 35 mm; axle load to: 940 kg

OPEL				
OPEL ASTRA H Estate				
B12 SL	**1.6 Turbo, 1.7 CDTI, 2.0 Turbo** 09/04 - 59 -147 kW	**46-182197**		disconect ITS+; Conditions see certificates VA: lowering (expertise): 40-45 mm; axle load to: 1025 kg HA: without ride height adjustment; lowering (expertise): 35 mm; axle load to: 940 kg
OPEL ASTRA H TwinTop				
B1	**1.6, 1.8** 09/05 - 77 -92 kW	**12-224449**		VA: with ball bearing
B1	**1.6 Turbo, 1.9 CDTi, 2.0 Turbo** 09/05 - 110 -147 kW	**12-224449**		VA: with ball bearing; without lowered chassis
B1	**1.6 Turbo, 1.9 CDTi, 2.0 Turbo** 09/05 - 110 -147 kW	**12-224456**		VA: with ball bearing; with lowered chassis
B1	**1.8** 09/05 - 103 kW	**12-224449**		VA: with ball bearing; Engine Code: Z18XER
B3	**1.6** 09/05 - 77 -85 kW	**37-163563**	**38-162350**	with standard chassis
B3	**1.6** 09/05 - 77 -85 kW	**37-163549**		with standard chassis; Heavy Duty Version .
B3	**1.6 Turbo, 1.8** 09/05 - 92 -132 kW	**37-163563**	**38-162350**	with standard chassis
B3	**1.6 Turbo, 1.8** 09/05 - 92 -132 kW	**37-163556**		with standard chassis; Heavy Duty Version .
B3	**1.9 CDTi, 2.0 Turbo** 09/05 - 110 -147 kW	**37-163556**	**38-162350**	with standard chassis
B4	**1.6, 1.6 Turbo, 1.8, 1.9 CDTi, 2.0 Turbo** 09/05 - 77 -147 kW	**22-141590** **22-141606** i.V. SP	**19-141626**	without electronic suspension control; without IDS+ suspension
B6 Sport	**1.6, 1.6 Turbo, 1.8, 1.9 CDTi, 2.0 Turbo** 09/05 - 77 -147 kW	**35-114666** **35-114673**	**24-118576**	without IDS+ suspension
B12 PK	**1.6, 1.8** 09/05 - 77 -103 kW	**46-194022**		disconect ITS+; Conditions see certificates VA: lowering (expertise): 30 mm; axle load to: 1000 kg HA: lowering (expertise): 30 mm; axle load to: 955 kg
B12 PK	**1.6 Turbo, 1.9 CDTi, 2.0 Turbo** 09/05 - 110 -147 kW	**46-194039**		Conditions see certificates VA: lowering (expertise): 30 mm; axle load to: 1070 kg HA: lowering (expertise): 30 mm; axle load to: 955 kg
OPEL ASTRA H Van				
B3	**1.3 CDTI, 1.7 CDTI** 03/04 - 66 -92 kW	**37-163549**	**38-162374**	with standard chassis
B3	**1.3 CDTI, 1.7 CDTI** 03/04 - 66 -92 kW	**37-163556**	**38-162350**	with standard chassis; Heavy Duty Version .
B3	**1.3 CDTI, 1.7 CDTI** 03/04 - 66 -92 kW		**38-162367**	with standard chassis; with ride height adjustment
B3	**1.9 CDTI, 1.9 CDTI 16V** 08/04 - 88 -110 kW	**37-163556**	**38-162374**	with standard chassis
B3	**1.9 CDTI, 1.9 CDTI 16V** 08/04 - 88 -110 kW		**38-162350**	with standard chassis; Heavy Duty Version .
B3	**1.9 CDTI, 1.9 CDTI 16V** 08/04 - 88 -110 kW		**38-162367**	with standard chassis; with ride height adjustment
B4	**1.3 CDTI, 1.7 CDTI, 1.9 CDTI, 1.9 CDTI 16V** 08/04 - 66 -110 kW	**22-141590** **22-141606** i.V. SP	**19-141626**	without electronic suspension control; without IDS+ suspension

O

OPEL				
OPEL ASTRA H Van				
B6 Sport	**1.3 CDTI, 1.7 CDTI, 1.9 CDTI, 1.9 CDTI 16V** 08/04 - 66 -110 kW	**35-114635** **35-114642**	**24-114653**	without IDS+ suspension
B8	**1.3 CDTI, 1.7 CDTI, 1.9 CDTI, 1.9 CDTI 16V** 08/04 - 66 -110 kW	**35-114666** **35-114673**	**24-114684**	without IDS+ suspension
B12 PK	**1.3 CDTI, 1.7 CDTI, 1.9 CDTI, 1.9 CDTI 16V** 08/04 - 66 -110 kW	**46-182159**		disconect ITS+; Conditions see certificates VA: lowering (expertise): 30-35 mm; axle load to: 1075 kg HA: without ride height adjustment; lowering (expertise): 25-30 mm; axle load to: 940 kg
B12 PK	**1.7 CDTI** 03/04 - 74 -92 kW	**46-182296**		Conditions see certificates VA: lowering (expertise): 25 mm; axle load to: 1020 kg HA: without ride height adjustment; lowering (expertise): 25 mm; axle load to: 1010 kg
OPEL ASTRA J				
B4	**1.3 CDTI ecoFLEX, 1.4 ecoFLEX, 1.4 Turbo, 1.6, 1.6 Turbo, 1.7 CDTI, 2.0 CDTI** 12/09 - 64 -132 kW	**22-183644** **22-183651**	**19-183633**	without FlexRide; with standard chassis
B6 Sport	**1.3 CDTI ecoFLEX, 1.4 ecoFLEX, 1.4 Turbo, 1.6, 1.6 Turbo, 1.7 CDTI, 2.0 CDTI** 12/09 - 64 -132 kW	**35-171669** **35-171676**	**24-171687**	without FlexRide; with standard chassis
B6 Sport	**1.3 CDTI ecoFLEX, 1.4 ecoFLEX, 1.4 Turbo, 1.6, 1.6 Turbo, 1.7 CDTI, 2.0 CDTI** 12/09 - 70 -132 kW	**35-171690** **35-171706**	**24-171717**	without FlexRide; with sports suspension
B8	**1.3 CDTI ecoFLEX, 1.4 ecoFLEX, 1.4 Turbo, 1.6, 1.6 Turbo, 1.7 CDTI, 2.0 CDTI** 12/09 - 64 -132 kW	**35-171690** **35-171706**	**24-171717**	without FlexRide; with sports suspension
B12 PK	**1.4 ecoFLEX, 1.4 Turbo, 1.6** 12/09 - 64 -103 kW	**46-188755**		without FlexRide; Conditions see certificates VA: lowering (expertise): 30 mm; axle load to: 995 kg HA: lowering (expertise): 30 mm; axle load to: 1020 kg
B12 PK	**1.3 CDTI ecoFLEX, 1.6, 1.6 Turbo** 12/09 - 70 -132 kW	**46-188762**		without FlexRide; Conditions see certificates VA: lowering (expertise): 30 mm; axle load to: 1080 kg HA: lowering (expertise): 30 mm; axle load to: 1020 kg
B12 PK	**1.7 CDTI, 2.0 CDTI** 12/09 - 81 -118 kW	**46-188779**		without FlexRide; Conditions see certificates VA: lowering (expertise): 30 mm; axle load to: 1155 kg HA: lowering (expertise): 30 mm; axle load to: 1020 kg
B14	**1.3 CDTI ecoFLEX, 1.4 ecoFLEX, 1.4 Turbo, 1.6, 1.6 Turbo, 1.7 CDTI, 2.0 CDTI** 12/09 - 64 -132 kW	**47-171725**		without FlexRide; Conditions see certificates VA: lowering (expertise): 30-50 mm; axle load to: 1220 kg HA: lowering (expertise): 30-50 mm; axle load to: 1020 kg
OPEL ASTRA Sports Tourer (J)				
B4	**1.3 CDTI, 1.4, 1.4 Turbo, 1.6, 1.6 Turbo, 1.7 CDTI, 2.0 CDTI** 10/10 - 70 -132 kW	**22-183644** **22-183651**	**19-183633**	without FlexRide; with standard chassis
B6 Sport	**1.3 CDTI, 1.4, 1.4 Turbo, 1.6, 1.6 Turbo, 1.7 CDTI, 2.0 CDTI** 10/10 - 70 -132 kW	**35-171669** **35-171676**	**24-171687**	without FlexRide; with standard chassis
B8	**1.3 CDTI, 1.4, 1.4 Turbo, 1.6, 1.6 Turbo, 1.7 CDTI, 2.0 CDTI** 10/10 - 70 -132 kW	**35-171690** **35-171706**	**24-171717**	without FlexRide; with sports suspension
B14	**1.3 CDTI, 1.4, 1.4 Turbo, 1.6, 1.6 Turbo, 1.7 CDTI, 2.0 CDTI** 10/10 - 70 -132 kW	**47-171725**		without FlexRide; Conditions see certificates VA: lowering (expertise): 30-50 mm; axle load to: 1220 kg HA: lowering (expertise): 30-50 mm; axle load to: 1020 kg
OPEL CALIBRA A (85_)				
B1	**2.0 i, 2.0 i 16V, 2.0 i 16V 4x4, 2.0 i 4x4, 2.0 i Turbo 4x4** 06/90 - 07/97 85 -150 kW	**12-116805**		VA: with ball bearing

OPEL				
OPEL CALIBRA A (85_)				
B1	**2.0 i 16V, 2.0 i 16V 4x4** 02/94 - CH-Nr. 100 kW	**12-116805**		-> CH.Nr.: S1000234 VA: with ball bearing
B1	**2.0 i 16V, 2.0 i 16V 4x4** CH-Nr. - 07/97 100 kW	**12-117635**		CH.Nr.: S1000235 -> VA: with ball bearing
B3	**2.0 i, 2.0 i 16V, 2.5 i V6** 06/90 - 07/97 85 -125 kW	**36-133932**	*38-130458*	with standard chassis
B3	**2.0 i 16V 4x4, 2.0 i 4x4, 2.0 i Turbo 4x4** 03/92 - 07/97 85 -150 kW	**36-162642**		with standard chassis; all-wheel drive
B4	**2.0 i, 2.0 i 16V, 2.0 i 16V 4x4, 2.0 i 4x4, 2.0 i Turbo 4x4, 2.5 i V6** 06/90 - 07/97 85 -150 kW	**21-030529** **11-101314** SP	**19-019758**	
B6 Sport	**2.0 i, 2.0 i 16V, 2.5 i V6** 06/90 - 07/97 85 -125 kW	**34-003725**	**24-016100**	
B6 Sport	**2.0 i 16V 4x4, 2.0 i 4x4, 2.0 i Turbo 4x4** 03/92 - 07/97 85 -150 kW	**34-003725**	**24-016100**	
B8	**2.0 i, 2.0 i 16V, 2.5 i V6** 06/90 - 07/97 85 -125 kW	**34-181584**	**24-016100**	
B8	**2.0 i 16V 4x4, 2.0 i 4x4, 2.0 i Turbo 4x4** 03/92 - 07/97 85 -150 kW	**34-181584**	**24-016100**	
B12 PK	**2.0 i, 2.0 i 16V, 2.0 i 16V 4x4, 2.0 i 4x4** 06/90 - 07/97 85 -110 kW	**46-192851**		Conditions see certificates VA: lowering (expertise): 30 mm; axle load to: 885 kg HA: lowering (expertise): 30 mm; axle load to: 880 kg
B12 PK	**2.0 i Turbo 4x4** 03/92 - 07/97 150 kW	**46-192868**		Conditions see certificates VA: lowering (expertise): 25 mm; axle load to: 940 kg HA: lowering (expertise): 25 mm; axle load to: 880 kg
OPEL COMMODORE A				
B4	**2.5, 2.5 GS, 2.5 GS/E, 2.8 GS** 08/67 - 01/72 85 -110 kW		*19-019598*	
B6 Sport	**2.5, 2.5 GS, 2.5 GS/E, 2.8 GS** 08/67 - 01/72 85 -110 kW	**24-631136**	**24-591522**	
OPEL COMMODORE A Coupe				
B4	**2.5, 2.5 GS, 2.5 GS/E, 2.8 GS** 08/67 - 01/72 85 -110 kW		*19-019598*	
OPEL COMMODORE B				
B3	**2.5, 2.5 GS, 2.8 GS, 2.8 GS/E** 01/72 - 07/78 85 -118 kW			with standard chassis
B3	**2.5, 2.5 GS, 2.8 GS, 2.8 GS/E** 01/72 - 07/78 85 -118 kW		*36-164332*	with standard chassis; Heavy Duty Version .
B6 Sport	**2.5, 2.5 GS, 2.8 GS, 2.8 GS/E** 01/72 - 07/78 85 -118 kW	**24-631136**	**24-631129**	
OPEL COMMODORE B Coupe				
B3	**2.5, 2.5 GS, 2.8 GS, 2.8 GS/E** 01/72 - 07/78 85 -118 kW			with standard chassis
B3	**2.5, 2.5 GS, 2.8 GS, 2.8 GS/E** 01/72 - 07/78 85 -118 kW		*36-164332*	with standard chassis; Heavy Duty Version .

O

OPEL				
OPEL COMMODORE C (14_, 19_)				
B3	**2.5 E, 2.5 S** 08/78 - 12/82 85 -96 kW	**36-162307** **36-162338**		with standard chassis
B3	**2.5 E, 2.5 S** 08/78 - 12/82 85 -96 kW		*36-164332*	with standard chassis; Heavy Duty Version .
B4	**2.5 S** 10/78 - 12/82 85 kW	*21-030376* **11-101369** SP		
B4	**2.5 E** 05/81 - 12/82 96 kW	*21-030376* **11-101369** SP		
B6 Sport	**2.5 E, 2.5 S** 08/78 - 05/81 85 -96 kW	*34-001417*	**24-008938** OIO	VA: Quick Repair Service .; Used part return required . HA: charakteristic: 220/80
OPEL COMMODORE C Estate (61)				
B3	**2.5 E, 2.5 S** 12/80 - 12/82 85 -96 kW	**36-162307** **36-162338**		with standard chassis
B4	**2.5 E, 2.5 S** 04/81 - 08/82 85 -96 kW	*21-030376* **11-101369** SP		
OPEL COMBO (71_)				
B1	**1.2, 1.4, 1.4 16V, 1.7 D** 07/94 - 10/01 33 -66 kW	**12-224197**		VA: with ball bearing
B2	**1.2, 1.4, 1.4 16V, 1.7 D** 07/94 - 10/01 33 -66 kW	**17-104104** **11-101314** SP		
B4	**1.2, 1.4, 1.4 16V, 1.7 D** 07/94 - 10/01 33 -66 kW	**22-040909** **11-101314** SP	**19-019970** OIO	
OPEL COMBO Tour				
B1	**1.3 CDTI 16V, 1.6, 1.7 CDTI 16V, 1.7 DI 16V, 1.7 DTI 16V** 10/01 - 48 -74 kW	**12-224036**		VA: with ball bearing
B3	**1.4, 1.4 16V** 10/04 - 66 kW	**36-215058**		with standard chassis; Not for increased payload; without AC
B3	**1.4, 1.4 16V** 10/04 - 66 kW	**36-219261**		with standard chassis; Not for increased payload; with AC
B4	**1.3 CDTI 16V, 1.4, 1.6, 1.7 CDTI 16V, 1.7 DI 16V, 1.7 DTI 16V** 10/01 - 48 -74 kW	**22-110442** **22-110459**	**19-115351** OIO	with standard chassis
OPEL COMBO Box Body / Estate				
B1	**1.3 CDTI 16V, 1.4 16V, 1.6, 1.7 DI 16V, 1.7 DTI 16V** 10/01 - 48 -66 kW	**12-224036**		VA: with ball bearing
B4	**1.6 CNG** 04/05 - 71 kW	**22-110442** **22-110459**		with standard chassis
B4	**1.3 CDTI 16V, 1.4 16V, 1.6, 1.6 16V, 1.7 CDTI 16V, 1.7 DI 16V, 1.7 DTI 16V** 10/01 - 48 -74 kW	**22-110442** **22-110459**	**19-115351** OIO	with standard chassis

OPEL

OPEL CORSA A Hatchback (93_, 94_, 98_, 99_)

B1	**1.0, 1.2, 1.2 i, 1.2 N, 1.2 S, 1.3, 1.3 GL, 1.3 i, 1.3 S, 1.4 i, 1.4 S, 1.4 Si, 1.5 D, 1.5 TD, 1.6 GL, 1.6 GSI, 1.6 GSI CAT** 09/82 - 03/93 33 -74 kW	**12-117772**		VA: with ball bearing
B2	**1.0, 1.2, 1.2 i, 1.2 N, 1.2 S, 1.3, 1.3 GL, 1.3 i, 1.3 S, 1.4 i, 1.4 S, 1.4 Si, 1.5 D, 1.5 TD, 1.6 GL** 09/82 - 03/93 33 -60 kW	**17-104104** **11-101314** *SP*	**15-126191**	
B3	**1.0, 1.2, 1.2 i, 1.2 N, 1.2 S, 1.3, 1.3 GL, 1.3 i, 1.3 S, 1.4 i, 1.4 S, 1.4 Si, 1.5 D, 1.5 TD** 09/82 - 03/93 33 -60 kW	**36-154531**	**38-161421**	with standard chassis
B3	**1.0, 1.2, 1.2 i, 1.2 N, 1.2 S, 1.3, 1.3 GL, 1.3 i, 1.3 S, 1.4 i, 1.4 S, 1.4 Si, 1.5 D, 1.5 TD** 09/82 - 03/93 33 -60 kW		**38-120008**	with standard chassis; Heavy Duty Version .
B4	**1.0, 1.2, 1.2 i, 1.2 N, 1.2 S, 1.3, 1.3 GL, 1.3 i, 1.3 S, 1.4 i, 1.4 S, 1.4 Si, 1.5 D, 1.5 TD, 1.6 GL** 09/82 - 03/93 33 -60 kW	**22-040909** **11-101314** *SP*	**19-126203**	
B4	**1.3 GL, 1.6 GL, 1.6 GSI, 1.6 GSI CAT** 09/82 - 03/93 55 -74 kW	**22-040909** **11-101314** *SP*	**19-019727**	with sports suspension
B6 Sport	**1.0, 1.2, 1.2 i, 1.2 N, 1.2 S, 1.3, 1.3 GL, 1.3 i, 1.3 S, 1.4 i, 1.4 S, 1.4 Si, 1.5 D, 1.5 TD, 1.6 GL, 1.6 GSI, 1.6 GSI CAT** 09/82 - 03/93 33 -74 kW	**35-040590**	**24-000857**	
B8	**1.0, 1.2, 1.2 i, 1.2 N, 1.2 S, 1.3, 1.3 GL, 1.3 i, 1.3 S, 1.4 i, 1.4 S, 1.4 Si, 1.5 D, 1.5 TD, 1.6 GL, 1.6 GSI, 1.6 GSI CAT** 09/82 - 03/93 33 -74 kW	**35-040590**	**24-000857**	
B10	**1.0, 1.2, 1.2 i, 1.2 N, 1.2 S, 1.3, 1.3 GL, 1.3 i, 1.3 S, 1.4 i, 1.4 S, 1.4 Si, 1.5 D, 1.5 TD, 1.6 GL, 1.6 GSI, 1.6 GSI CAT** 09/82 - 03/93 33 -74 kW	**46-111951**		Conditions see certificates VA: lowering (expertise): 60 mm HA: lowering (expertise): 40 mm
B12 SL	**1.0, 1.2, 1.2 i, 1.2 N, 1.2 S, 1.3, 1.3 GL, 1.3 i, 1.3 S, 1.4 i, 1.4 S, 1.4 Si** 09/82 - 03/93 33 -60 kW	**46-189004**		Conditions see certificates VA: lowering (expertise): 45-50 mm; axle load to: 790 kg HA: lowering (expertise): 30-35 mm; axle load to: 700 kg
B14	**1.0, 1.2, 1.2 i, 1.2 N, 1.2 S, 1.3, 1.3 GL, 1.3 i, 1.3 S, 1.4 i, 1.4 S, 1.4 Si, 1.5 D, 1.5 TD, 1.6 GL, 1.6 GSI, 1.6 GSI CAT** 09/82 - 03/93 33 -74 kW	**47-080713**		Spacers required for several wheel/tyre combinations; Conditions see certificates VA: lowering (expertise): 30-50 mm; axle load to: 820 kg HA: lowering (expertise): 20-40 mm; axle load to: 700 kg
B16 PSS9	**1.0, 1.2, 1.2 i, 1.2 N, 1.2 S, 1.3, 1.3 GL, 1.3 i, 1.3 S, 1.4 i, 1.4 S, 1.4 Si, 1.5 D, 1.5 TD, 1.6 GL, 1.6 GSI, 1.6 GSI CAT** 09/82 - 03/93 33 -74 kW	**48-080767**		Spacers required for several wheel/tyre combinations; Conditions see certificates VA: lowering (expertise): 30-50 mm; axle load to: 820 kg HA: lowering (expertise): 20-40 mm; axle load to: 700 kg
MS	**1.0, 1.2, 1.2 i, 1.2 N, 1.2 S, 1.3, 1.3 GL, 1.3 i, 1.3 S, 1.4 i, 1.4 S, 1.4 Si, 1.5 D, 1.5 TD, 1.6 GL, 1.6 GSI, 1.6 GSI CAT** 09/82 - 03/93 33 -74 kW	*35-041757*	**24-023917**	mark: Rallye VA: charakteristic: 230/80 HA: charakteristic: 200/80

OPEL

OPEL CORSA A Hatchback (93_, 94_, 98_, 99_)

MS	**1.0, 1.2, 1.2 i, 1.2 N, 1.2 S, 1.3, 1.3 GL, 1.3 i, 1.3 S, 1.4 i, 1.4 S, 1.4 Si, 1.5 D, 1.5 TD, 1.6 GL, 1.6 GSI, 1.6 GSI CAT** 09/82 - 03/93 33 -74 kW	**35-042136**	**24-023900**	mark: Rennen Gruppe N+G VA: charakteristic: 230/80; rebound: 20 mm HA: charakteristic: 200/80; rebound: 20 mm

OPEL CORSA A TR (91_, 92_, 96_, 97_)

B1	**1.0, 1.2 N, 1.2 S, 1.3, 1.3 GL, 1.3 S, 1.5 D** 09/82 - 11/92 33 -55 kW	**12-117772**		VA: with ball bearing
B2	**1.0, 1.2 i, 1.2 N, 1.2 S, 1.3, 1.3 GL, 1.3 S, 1.4 i, 1.4 S, 1.5 D, 1.5 TD** 09/82 - 03/93 33 -55 kW	**17-104104** **11-101314** *SP*	**15-126191**	
B3	**1.0, 1.2 i, 1.2 N, 1.2 S, 1.3, 1.3 GL, 1.3 S, 1.4 i, 1.4 S, 1.5 D, 1.5 TD** 09/82 - 03/93 33 -55 kW	**36-154531**	**38-161421**	with standard chassis
B3	**1.3, 1.3 GL, 1.3 S, 1.4 i, 1.4 S, 1.5 D, 1.5 TD** 09/82 - 03/93 37 -55 kW		**38-120008**	with standard chassis; Heavy Duty Version .
B4	**1.0, 1.2 i, 1.2 N, 1.2 S, 1.3, 1.3 GL, 1.3 S, 1.4 i, 1.4 S, 1.5 D, 1.5 TD** 09/82 - 03/93 33 -55 kW	**22-040909** **11-101314** *SP*	**19-126203**	
B6 Sport	**1.0, 1.2 i, 1.2 N, 1.2 S, 1.3, 1.3 GL, 1.3 S, 1.4 i, 1.4 S, 1.5 D, 1.5 TD** 09/82 - 03/93 33 -55 kW	**35-040590**	**24-000857**	
B8	**1.0, 1.2 i, 1.2 N, 1.2 S, 1.3, 1.3 GL, 1.3 S, 1.4 i, 1.4 S, 1.5 D, 1.5 TD** 09/82 - 03/93 33 -55 kW	**35-040590**	**24-000857**	
B10	**1.0, 1.2 i, 1.2 N, 1.2 S, 1.3, 1.3 GL, 1.3 S, 1.4 i, 1.4 S, 1.5 D, 1.5 TD** 09/82 - 03/93 33 -55 kW	**46-111951**		Conditions see certificates VA: lowering (expertise): 55 mm; axle load to: 775 kg HA: lowering (expertise): 50 mm; axle load to: 670 kg
B12 SL	**1.0, 1.2 i, 1.2 N, 1.2 S, 1.3, 1.3 GL, 1.3 S, 1.4 i, 1.4 S** 09/82 - 03/93 33 -55 kW	**46-189004**		Conditions see certificates VA: lowering (expertise): 45-50 mm; axle load to: 790 kg HA: lowering (expertise): 30-35 mm; axle load to: 700 kg
B14	**1.0, 1.2 i, 1.2 N, 1.2 S, 1.3, 1.3 GL, 1.3 S, 1.4 i, 1.4 S, 1.5 D, 1.5 TD** 09/82 - 03/93 33 -55 kW	**47-080713**		Spacers required for several wheel/tyre combinations; Conditions see certificates VA: lowering (expertise): 30-50 mm; axle load to: 820 kg HA: lowering (expertise): 20-40 mm; axle load to: 700 kg
B16 PSS9	**1.0, 1.2 i, 1.2 N, 1.2 S, 1.3, 1.3 GL, 1.3 S, 1.4 i, 1.4 S, 1.5 D, 1.5 TD** 09/82 - 03/93 33 -55 kW	**48-080767**		Spacers required for several wheel/tyre combinations; Conditions see certificates VA: lowering (expertise): 30-50 mm; axle load to: 820 kg HA: lowering (expertise): 20-40 mm; axle load to: 700 kg
MS	**1.0, 1.2 i, 1.2 N, 1.2 S, 1.3, 1.3 GL, 1.3 S, 1.4 i, 1.4 S, 1.5 D, 1.5 TD, 1.0 i 12V, 1.2 i, 1.2 i 16V, 1.4, 1.4 i, 1.4 i 16V, 1.4 Si, 1.5 D, 1.5 TD, 1.6 GSI 16V, 1.6 i 16V, 1.7 D** 09/82 - 09/00 33 -80 kW	*35-041757*	**24-023917**	mark: Rallye VA: charakteristic: 230/80 HA: charakteristic: 200/80
MS	**1.0, 1.2 i, 1.2 N, 1.2 S, 1.3, 1.3 GL, 1.3 S, 1.4 i, 1.4 S, 1.5 D, 1.5 TD** 09/82 - 03/93 33 -55 kW	**35-042136**	**24-023900**	mark: Rennen Gruppe N+G VA: charakteristic: 230/80; rebound: 20 mm HA: charakteristic: 200/80; rebound: 20 mm

OPEL CORSA B (73_, 78_, 79_)

B1	**1.0 i 12V, 1.2 i, 1.2 i 16V, 1.4, 1.4 i, 1.4 i 16V, 1.4 Si, 1.5 D, 1.5 TD, 1.6 GSI 16V, 1.6 i 16V, 1.7 D** 02/96 - 09/00 33 -80 kW	**12-224197**		VA: with ball bearing

OPEL				
OPEL CORSA B (73_, 78_, 79_)				
B2	**1.0 i 12V, 1.2 i, 1.2 i 16V, 1.4, 1.4 i, 1.4 i 16V, 1.4 Si, 1.5 D, 1.5 TD, 1.6 i 16V, 1.7 D** 02/96 - 09/00 33 -78 kW	**17-104104** **11-101314** *SP*	**15-126405**	
B3	**1.2 i, 1.2 i 16V, 1.4, 1.4 i, 1.4 i 16V, 1.4 Si** 03/93 - 09/00 33 -67 kW	**36-130337**	**38-130342**	with standard chassis
B3	**1.2 i, 1.2 i 16V, 1.4, 1.4 i, 1.4 i 16V, 1.5 D, 1.7 D** 03/93 - 09/00 33 -67 kW	**36-130108**	**38-130403**	with standard chassis; Heavy Duty Version .
B3	**1.6 GSI 16V** 03/93 - 09/00 80 kW	**36-161447**	**38-120008**	with standard chassis
B3	**1.5 D, 1.7 D** 03/93 - 09/00 37 -44 kW	**36-133949**	**38-130342**	with standard chassis
B3	**1.5 TD** 03/93 - 09/00 49 kW	**36-130108**	**38-130342**	with standard chassis
B3	**1.5 TD, 1.6 GSI 16V** 03/93 - 09/00 49 -80 kW		**38-130403**	with standard chassis; Heavy Duty Version .
B4	**1.0 i 12V, 1.2 i, 1.2 i 16V, 1.4, 1.4 i, 1.4 i 16V, 1.4 Si, 1.5 D, 1.5 TD, 1.6 GSI 16V, 1.6 i 16V, 1.7 D** 02/96 - 09/00 33 -80 kW	**22-040909** **11-101314** *SP*	**19-126395**	with standard chassis
B4	**1.0 i 12V, 1.2 i, 1.2 i 16V, 1.4, 1.4 i, 1.4 i 16V, 1.4 Si, 1.5 D, 1.5 TD, 1.6 GSI 16V, 1.6 i 16V, 1.7 D** 02/96 - 09/00 33 -80 kW	**22-040909** **11-101314** *SP*	**19-019727**	with sports suspension
B6 Sport	**1.0 i 12V, 1.2 i, 1.2 i 16V, 1.4, 1.4 i, 1.4 i 16V, 1.4 Si, 1.5 D, 1.5 TD, 1.6 GSI 16V, 1.6 i 16V, 1.7 D** 02/96 - 09/00 33 -80 kW	**35-040590**	**24-000857**	
B8	**1.0 i 12V, 1.2 i, 1.2 i 16V, 1.4, 1.4 i, 1.4 i 16V, 1.4 Si, 1.5 D, 1.5 TD, 1.6 GSI 16V, 1.6 i 16V, 1.7 D** 02/96 - 09/00 33 -80 kW	**35-040590**	**24-000857**	
B10	**1.0 i 12V, 1.2 i, 1.2 i 16V, 1.4, 1.4 i, 1.4 i 16V, 1.4 Si, 1.5 D, 1.5 TD, 1.6 GSI 16V, 1.6 i 16V, 1.7 D** 02/96 - 09/00 33 -80 kW	**46-111951**		Conditions see certificates VA: lowering (expertise): 60 mm HA: lowering (expertise): 40 mm
B12 PK	**1.0 i 12V, 1.2 i, 1.2 i 16V, 1.4, 1.4 i, 1.4 i 16V, 1.4 Si, 1.6 GSI 16V, 1.6 i 16V** 09/94 - 09/00 33 -80 kW	**46-189011**		Conditions see certificates VA: lowering (expertise): 30 mm; axle load to: 790 kg HA: lowering (expertise): 30 mm; axle load to: 700 kg
B12 SL	**1.0 i 12V, 1.2 i, 1.2 i 16V, 1.4, 1.4 i, 1.4 i 16V, 1.4 Si, 1.6 GSI 16V, 1.6 i 16V** 09/94 - 09/00 33 -80 kW	**46-189004**		Conditions see certificates VA: lowering (expertise): 45-50 mm; axle load to: 790 kg HA: lowering (expertise): 25 mm; axle load to: 700 kg
B14	**1.0 i 12V, 1.2 i, 1.2 i 16V, 1.4, 1.4 i, 1.4 i 16V, 1.4 Si, 1.5 D, 1.5 TD, 1.6 GSI 16V, 1.6 i 16V, 1.7 D** 02/96 - 09/00 33 -80 kW	**47-080713**		Spacers required for several wheel/tyre combinations; Conditions see certificates VA: lowering (expertise): 30-50 mm; axle load to: 820 kg HA: lowering (expertise): 20-40 mm; axle load to: 700 kg
B16 PSS9	**1.0 i 12V, 1.2 i, 1.2 i 16V, 1.4, 1.4 i, 1.4 i 16V, 1.4 Si, 1.5 D, 1.5 TD, 1.6 GSI 16V, 1.6 i 16V, 1.7 D** 02/96 - 09/00 33 -80 kW	**48-080767**		Spacers required for several wheel/tyre combinations; Conditions see certificates VA: lowering (expertise): 30-50 mm; axle load to: 820 kg HA: lowering (expertise): 20-40 mm; axle load to: 700 kg

OPEL

OPEL CORSA B (73_, 78_, 79_)

MS	**1.0 i 12V, 1.2 i, 1.2 i 16V, 1.4, 1.4 i, 1.4 i 16V, 1.4 Si, 1.5 D, 1.5 TD, 1.6 GSI 16V, 1.6 i 16V, 1.7 D** 02/96 - 09/00 33 -80 kW	**35-042136**	**24-023900**	mark: Renen Gruppe N+G VA: charakteristic: 230/80; rebound: 20 mm HA: charakteristic: 200/80; rebound: 20 mm

OPEL CORSA CLASSIC Saloon

B1	**1.4** 08/94 - 07/02 44 kW	**12-224197**		VA: with ball bearing
B2	**1.4** 08/94 - 07/02 44 kW	**17-104104** **11-101314** SP	**15-126405**	
B3	**1.4** 08/94 - 07/02 44 kW	**36-130337**	**38-130342**	with standard chassis
B3	**1.4** 08/94 - 07/02 44 kW	**36-130108**	**38-130403**	with standard chassis; Heavy Duty Version .
B4	**1.4** 08/94 - 07/02 44 kW	**22-040909** **11-101314** SP	**19-126395**	with standard chassis
B4	**1.4** 08/94 - 07/02 44 kW	**22-040909** **11-101314** SP	**19-019727**	with sports suspension
B6 Sport	**1.4** 08/94 - 07/02 44 kW	**35-040590**	**24-000857**	
B8	**1.4** 08/94 - 07/02 44 kW	**35-040590**	**24-000857**	
B10	**1.4** 08/94 - 07/02 44 kW	**46-111951**		Conditions see certificates VA: lowering (expertise): 60 mm HA: lowering (expertise): 40 mm
B14	**1.4** 08/94 - 07/02 44 kW	**47-080713**		Spacers required for several wheel/tyre combinations; Conditions see certificates VA: lowering (expertise): 30-50 mm; axle load to: 820 kg HA: lowering (expertise): 20-40 mm; axle load to: 700 kg
B16 PSS9	**1.4** 08/94 - 07/02 44 kW	**48-080767**		Spacers required for several wheel/tyre combinations; Conditions see certificates VA: lowering (expertise): 30-50 mm; axle load to: 820 kg HA: lowering (expertise): 20-40 mm; axle load to: 700 kg
MS	**1.4** 08/94 - 07/02 44 kW	*35-041757*	**24-023917**	mark: Rallye VA: charakteristic: 230/80 HA: charakteristic: 200/80
MS	**1.4** 08/94 - 07/02 44 kW	**35-042136**	**24-023900**	mark: Renen Gruppe N+G VA: charakteristic: 230/80; rebound: 20 mm HA: charakteristic: 200/80; rebound: 20 mm

OPEL CORSA B Box (73_)

B3	**1.4 i, 1.7 D** 08/99 - 09/00 44 kW	i.V.	**38-130403**	with standard chassis; Number of Doors: 3
B4	**1.4 i, 1.7 D** 08/99 - 09/00 44 kW	**22-040909** **11-101314** SP	**19-019970**	

OPEL CORSA C (F08, F68)

B1	**1.0, 1.2, 1.2 Twinport, 1.3 CDTI, 1.4, 1.4 Twinport, 1.6, 1.7 CDTI, 1.7 DI, 1.7 DTI, 1.8** 09/00 - 43 -92 kW	**12-117390**		VA: Soft Version; without ball bearing
B3	**1.0** 09/00 - 43 kW	**37-130275**	**38-130182**	with standard chassis

OPEL				
OPEL CORSA C (F08, F68)				
B3	**1.2, 1.2 Twinport** 09/00 - 55 -59 kW	**37-130282**	**38-130182**	with standard chassis
B3	**1.4, 1.4 Twinport, 1.7 DI, 1.7 DTI, 1.8** 09/00 - 48 -92 kW	**37-133955**	**38-130182**	with standard chassis
B3	**1.4, 1.4 Twinport, 1.8** 09/00 - 66 -92 kW	**37-162627**	**38-162534**	mark: Sport; mark: GSI
B4	**1.0, 1.2, 1.2 Twinport, 1.3 CDTI, 1.6, 1.7 CDTI, 1.7 DI** 09/00 - 43 -74 kW	**22-110442** li **22-110459** re	**19-108988**	with standard chassis HA: thread: M10
B4	**1.0, 1.2, 1.2 Twinport, 1.3 CDTI, 1.4, 1.4 Twinport, 1.6, 1.7 CDTI, 1.7 DI, 1.7 DTI, 1.8** 09/00 - 43 -92 kW	**22-118714** li **22-118721** re	**19-108995**	with sports suspension HA: thread: M14
B4	**1.0, 1.2, 1.2 Twinport, 1.3 CDTI, 1.4, 1.4 Twinport, 1.6, 1.7 CDTI, 1.7 DI, 1.7 DTI, 1.8** 09/00 - 43 -92 kW	**22-110442** li **22-110459** re	**19-108995**	with off-road suspension HA: thread: M14
B4	**1.4, 1.4 Twinport, 1.7 DTI, 1.8** 09/00 - 55 -92 kW	**22-110442** li **22-110459** re	**19-108995**	with standard chassis
B6 Sport	**1.0, 1.2, 1.2 Twinport, 1.3 CDTI, 1.4, 1.4 Twinport, 1.6, 1.7 CDTI, 1.7 DI, 1.7 DTI, 1.8** 09/00 - 43 -92 kW	**35-141068** li **35-141075** re	**24-141086**	with standard chassis HA: thread: M10
B6 Sport	**1.0, 1.2, 1.2 Twinport, 1.3 CDTI, 1.4, 1.4 Twinport, 1.6, 1.7 CDTI, 1.7 DI, 1.7 DTI, 1.8** 09/00 - 43 -92 kW	**35-141068** li **35-141075** re	**24-142342**	with sports suspension HA: thread: M14
B8	**1.0, 1.2, 1.2 Twinport, 1.3 CDTI, 1.4, 1.4 Twinport, 1.6, 1.7 CDTI, 1.7 DI, 1.7 DTI, 1.8** 09/00 - 43 -92 kW	**35-141099** li **35-141105** re	**24-141116**	with standard chassis HA: thread: M10
B8	**1.0, 1.2, 1.2 Twinport, 1.3 CDTI, 1.4, 1.4 Twinport, 1.6, 1.7 CDTI, 1.7 DI, 1.7 DTI, 1.8** 09/00 - 43 -92 kW	**35-141099** li **35-141105** re	**24-142342**	with sports suspension HA: thread: M14
B12 PK	**1.0, 1.2, 1.2 Twinport, 1.4, 1.4 Twinport** 09/00 - 43 -66 kW	**46-189042**		Conditions see certificates; thread: M10 VA: lowering (expertise): 30 mm; axle load to: 820 kg HA: lowering (expertise): 30 mm; axle load to: 760 kg
B12 PK	**1.0, 1.2, 1.2 Twinport, 1.4, 1.4 Twinport** 09/00 - 44 -66 kW	**46-189028**		Conditions see certificates; thread: M14 VA: lowering (expertise): 30 mm; axle load to: 820 kg HA: lowering (expertise): 30 mm; axle load to: 760 kg
B12 PK	**1.3 CDTI, 1.7 CDTI, 1.7 DI, 1.7 DTI, 1.8** 09/00 - 48 -92 kW	**46-189059**		Conditions see certificates; thread: M10 VA: lowering (expertise): 30 mm; axle load to: 940 kg HA: drum Brake; lowering (expertise): 30 mm; axle load to: 760 kg
B12 PK	**1.3 CDTI, 1.7 CDTI, 1.7 DI, 1.7 DTI, 1.8** 09/00 - 48 -92 kW	**46-189035**		Conditions see certificates; thread: M14 VA: lowering (expertise): 30 mm; axle load to: 940 kg HA: disc Brake; lowering (expertise): 30 mm; axle load to: 760 kg
B14	**1.0, 1.2, 1.2 Twinport, 1.3 CDTI, 1.4, 1.4 Twinport, 1.6, 1.7 CDTI, 1.7 DI, 1.7 DTI, 1.8** 09/00 - 43 -92 kW	**47-167254**		Conditions see certificates VA: lowering (expertise): 30-50 mm; axle load to: 900 kg HA: lowering (expertise): 20-40 mm; axle load to: 760 kg
OPEL CORSA C Box (F08, W5L)				
B1	**1.2, 1.2 16V** 09/00 - 55 -59 kW	**12-224036**		VA: with ball bearing
B3	**1.3 CDTI 16V** 08/05 - 51 kW	**37-130282**	i.V.	with standard chassis

OPEL

OPEL CORSA C Box (F08, W5L)

B4	**1.2, 1.2 16V, 1.3 CDTI 16V, 1.4, 1.6 X, 1.7 CDTi, 1.7 DI 16V, 1.7 DTI 16V** 10/01 - 48 -74 kW	**22-110442** **22-110459**	**19-115351**	

OPEL CORSA D

B1	**1.0, 1.2, 1.2 ecoFLEX, 1.2 LPG, 1.3 CDTI, 1.4, 1.4 ecoFLEX, 1.4 LPG, 1.6 Turbo, 1.7 CDTI** 07/06 - 44 -110 kW	**12-226399**		VA: with ball bearing
B3	**1.0** 07/06 - 44 -48 kW	**36-218547**	**36-218806**	with standard chassis; without AC
B3	**1.0** 07/06 - 44 -48 kW	**36-218820**		with standard chassis; with AC
B3	**1.0** 07/06 - 44 -48 kW		**36-218813**	with standard chassis; Heavy Duty Version .
B3	**1.2, 1.2 ecoFLEX, 1.2 LPG, 1.4, 1.4 ecoFLEX, 1.4 LPG** 09/09 - 51 -74 kW	**36-218547**		with standard chassis; without AC; Number of Doors: 3
B3	**1.2, 1.2 ecoFLEX, 1.2 LPG** 09/09 - 51 -63 kW	**36-218820**		with standard chassis; with AC; Number of Doors: 3
B3	**1.2, 1.2 ecoFLEX, 1.2 LPG** 09/09 - 51 -63 kW	**36-218820**		with standard chassis; without AC; Number of Doors: 5
B3	**1.2, 1.2 ecoFLEX, 1.2 LPG** 09/09 - 51 -63 kW	**36-218547**		with standard chassis; with AC; Number of Doors: 5
B3	**1.2, 1.2 ecoFLEX, 1.2 LPG** 09/09 - 51 -63 kW		**36-218806**	with standard chassis
B3	**1.2, 1.2 ecoFLEX, 1.2 LPG** 09/09 - 51 -63 kW		**36-218813**	with standard chassis; Heavy Duty Version .
B3	**1.4, 1.4 ecoFLEX, 1.4 LPG** 07/06 - 64 -74 kW	**36-218820**		with standard chassis; with AC; Number of Doors: 3; manual transmission
B3	**1.4, 1.4 ecoFLEX, 1.4 LPG** 07/06 - 64 -74 kW	**36-218820**		with standard chassis; without AC; Number of Doors: 5; manual transmission
B3	**1.4, 1.4 ecoFLEX, 1.4 LPG** 07/06 - 64 -74 kW	**36-218820**		with standard chassis; without AC; Number of Doors: 3; automatic transmission
B3	**1.4, 1.4 ecoFLEX, 1.4 LPG** 07/06 - 64 -74 kW	**36-213672**		with standard chassis; with AC; automatic transmission
B3	**1.4, 1.4 ecoFLEX, 1.4 LPG** 07/06 - 64 -74 kW		**36-218806**	with standard chassis
B3	**1.4, 1.4 ecoFLEX, 1.4 LPG** 07/06 - 64 -74 kW		**36-218813**	with standard chassis; Heavy Duty Version .
B3	**1.3 CDTI** 07/06 - 55 kW	**36-218776**	**36-218806**	with standard chassis; with AC
B3	**1.3 CDTI, 1.7 CDTI** 07/06 - 55 -96 kW		**36-218813**	with standard chassis; Heavy Duty Version .
B3	**1.3 CDTI** 07/06 - 66 -70 kW	**36-218783**	**36-218806**	with standard chassis; with AC
B3	**1.7 CDTI** 07/06 - 92 -96 kW	**36-218790**	**36-218806**	with standard chassis; with AC

OPEL

OPEL CORSA D

B4	**1.0, 1.2, 1.2 ecoFLEX, 1.2 LPG, 1.3 CDTI, 1.4, 1.4 ecoFLEX, 1.4 LPG, 1.6 Turbo, 1.7 CDTI** 07/06 - 44 -110 kW	**22-158475** **22-158482**	**19-158495**	with standard chassis; with sports suspension
B6 Sport	**1.0, 1.2, 1.2 ecoFLEX, 1.2 LPG, 1.3 CDTI, 1.4, 1.4 ecoFLEX, 1.4 LPG, 1.6 Turbo, 1.7 CDTI** 07/06 - 44 -110 kW	**35-140207** **35-140214**	**24-140225**	with standard chassis
B6 Sport	**1.6 Turbo** 02/07 - 141 kW	**35-140238** **35-140245**	**24-140256**	
B8	**1.0, 1.2, 1.2 ecoFLEX, 1.2 LPG, 1.3 CDTI, 1.4, 1.4 ecoFLEX, 1.4 LPG, 1.6 Turbo, 1.7 CDTI** 07/06 - 44 -110 kW	**35-140238** **35-140245**	**24-140256**	with sports suspension
B12 PK	**1.0, 1.2, 1.4** 07/06 - 44 -66 kW	**46-188144**		Conditions see certificates VA: lowering (expertise): 30 mm; axle load to: 885 kg HA: without ride height adjustment; lowering (expertise): 30 mm; axle load to: 845 kg
B12 PK	**1.2, 1.2 ecoFLEX, 1.2 LPG, 1.3 CDTI, 1.4, 1.4 ecoFLEX, 1.4 LPG, 1.6 Turbo, 1.7 CDTI** 07/06 - 55 -110 kW	**46-188151**		with standard chassis; Conditions see certificates VA: lowering (expertise): 30 mm; axle load to: 1000 kg HA: lowering (expertise): 30 mm; axle load to: 845 kg
B12 PK	**1.6 Turbo** 02/07 - 110 -141 kW	**46-188151**		with sports suspension; Conditions see certificates VA: lowering (expertise): 15 mm; axle load to: 1000 kg HA: lowering (expertise): 15 mm; axle load to: 845 kg
B14	**1.0, 1.2, 1.2 ecoFLEX, 1.2 LPG, 1.3 CDTI, 1.4, 1.4 ecoFLEX, 1.4 LPG, 1.7 CDTI** 07/06 - 44 -96 kW	**47-164499**		VA: Conditions see certificates; lowering (expertise): 35-45 mm; axle load to: 1000 kg HA: lowering (expertise): 30-45 mm; axle load to: 850 kg
B14	**1.6 Turbo** 02/07 - 110 -141 kW	**47-164499**		VA: Conditions see certificates; lowering (expertise): 20-30 mm; axle load to: 1000 kg HA: lowering (expertise): 15-30 mm; axle load to: 850 kg
B14	**1.6 Turbo** 06/11 - 155 kW	**47-164499**		VA: Conditions see certificates; lowering (expertise): 0-10 mm; axle load to: 1000 kg HA: lowering (expertise): 0-10 mm; axle load to: 850 kg

OPEL CORSA D Van

B1	**1.0, 1.2, 1.3 CDTI** 07/06 - 44 -70 kW	**12-226399**		VA: with ball bearing
B3	**1.0** 07/06 - 44 -48 kW	**36-218547**	**36-218806**	with standard chassis; without AC
B3	**1.2** 07/09 - 51 -63 kW	**36-218547**		with standard chassis; without AC; Number of Doors: 3
B3	**1.2** 07/09 - 51 -63 kW	**36-218820**		with standard chassis; with AC; Number of Doors: 3
B3	**1.2** 07/09 - 51 -63 kW	**36-218820**		with standard chassis; without AC; Number of Doors: 5
B3	**1.2** 07/09 - 51 -63 kW	**36-218547**		with standard chassis; with AC; Number of Doors: 5
B3	**1.3 CDTI** 07/06 - 55 kW	**36-218776**		with standard chassis; with AC
B3	**1.3 CDTI** 07/06 - 66 -70 kW	**36-218783**		with standard chassis; with AC
B4	**1.0, 1.2, 1.3 CDTI** 07/06 - 44 -70 kW	**22-158475** **22-158482**	**19-158495**	with standard chassis; with sports suspension

OPEL				
OPEL CORSA D Van				
B6 Sport	**1.0, 1.2, 1.3 CDTI** 07/06 - 44 -70 kW	**35-140207** 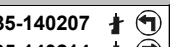 **35-140214**	**24-140225**	
B8	**1.0, 1.2, 1.3 CDTI** 07/06 - 44 -70 kW	**35-140238** 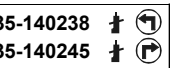 **35-140245**	**24-140256**	
B12 PK	**1.0, 1.2** 07/06 - 44 -63 kW	**46-188144**		Conditions see certificates VA: lowering (expertise): 30 mm; axle load to: 885 kg HA: without ride height adjustment; lowering (expertise): 30 mm; axle load to: 845 kg
B12 PK	**1.3 CDTI** 07/06 - 55 -70 kW	**46-188151**		Conditions see certificates VA: lowering (expertise): 30 mm; axle load to: 1000 kg HA: without ride height adjustment; lowering (expertise): 30 mm; axle load to: 845 kg
B14	**1.0, 1.2, 1.3 CDTI** 07/06 - 44 -70 kW	**47-164499**		VA: Conditions see certificates; lowering (expertise): 35-45 mm; axle load to: 1000 kg HA: lowering (expertise): 30-45 mm; axle load to: 850 kg
OPEL DIPLOMAT B				
B6 Sport	**2.8, 2.8 E, 5.3** 03/69 - 08/78 103 -169 kW	**24-632683**	**24-632690**	
OPEL FRONTERA A Sport (5_SUD2)				
B4	**2.0 i, 2.8 TD** 03/92 - CH-Nr. 83 -85 kW	**19-028897**	**19-028903**	-> CH.Nr.: SV720102; with leaf-spring suspension
B6 Offroad	**2.0 i, 2.8 TD** 03/92 - CH-Nr. 83 -85 kW	**24-016766**	**24-016773**	-> CH.Nr.: SV720102; with leaf-spring suspension
B6 Offroad	**2.0 i, 2.5 TDS, 2.8 TD** CH-Nr. - 10/98 83 -85 kW	**24-016766**	**24-022989**	CH.Nr.: SV720103 ->; with coil-spring suspension
OPEL FRONTERA A (5_MWL4)				
B4	**2.2 i, 2.3 TD, 2.4 i, 2.8 TD** 03/92 - CH-Nr. 74 -100 kW	**19-028897**	**19-028903**	-> CH.Nr.: SV720102; with leaf-spring suspension
B6 Offroad	**2.2 i, 2.3 TD, 2.4 i, 2.8 TD** 03/92 - CH-Nr. 74 -100 kW	**24-016766**	**24-016773**	-> CH.Nr.: SV720102; with leaf-spring suspension
B6 Offroad	**2.2 i, 2.3 TD, 2.4 i, 2.5 TDS, 2.8 TD** CH-Nr. - 10/98 74 -100 kW	**24-016766**	**24-022989**	CH.Nr.: SV720103 ->; with coil-spring suspension
OPEL FRONTERA B (6B_)				
B4	**2.2 DTI, 2.2 i, 3.2 i** 10/98 - 85 -151 kW	**19-146973**	**19-146980**	
B6 Offroad	**2.2 DTI, 2.2 i, 3.2 i** 11/98 - 85 -151 kW	**24-028318**	**24-029865**	
OPEL GT				
B6 Sport	**1.1, 1.9** 09/68 - 08/73 44 -66 kW	**24-632171**	**24-004930**	
OPEL INSIGNIA				
B4	**1.4, 1.6, 1.6 Turbo, 1.8, 2.0 Biturbo CDTI, 2.0 Biturbo CDTI 4x4, 2.0 CDTI, 2.0 CDTI 4x4, 2.0 E85 Turbo, 2.0 Turbo, 2.0 Turbo 4x4, 2.8 V6 Turbo** 07/08 - 81 -191 kW	**22-183675** 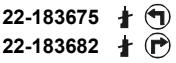 **22-183682**	**19-183664**	without FlexRide; with standard chassis

OPEL

OPEL INSIGNIA

B6 Sport	**1.4, 1.6, 1.6 Turbo, 1.8, 2.0 Biturbo CDTI, 2.0 Biturbo CDTI 4x4, 2.0 CDTI, 2.0 CDTI 4x4, 2.0 E85 Turbo, 2.0 Turbo, 2.0 Turbo 4x4, 2.8 V6 Turbo** 07/08 - 81 -191 kW	**35-167990** **35-168003**	**24-168014**	without FlexRide; with standard chassis
B6 Sport	**2.8 V6 Turbo 4x4 OPC** 07/09 - 239 kW	**35-168027** **35-168034**	**24-168045**	without IDS+ suspension; with sports suspension
B8	**1.4, 1.6, 1.6 Turbo, 1.8, 2.0 Biturbo CDTI, 2.0 Biturbo CDTI 4x4, 2.0 CDTI, 2.0 CDTI 4x4, 2.0 E85 Turbo, 2.0 Turbo, 2.0 Turbo 4x4, 2.8 V6 Turbo** 07/08 - 81 -191 kW	**35-168027** **35-168034**	**24-168045**	without FlexRide; with sports suspension
B12 PK	**1.6, 1.8** 07/08 - 85 -103 kW	**46-188786**		without FlexRide; without ride height adjustment; Conditions see certificates VA: lowering (expertise): 30 mm; axle load to: 1030 kg HA: lowering (expertise): 30 mm; axle load to: 1160 kg
B12 PK	**1.6 Turbo, 2.0 Biturbo CDTI, 2.0 CDTI, 2.0 E85 Turbo, 2.0 Turbo** 07/08 - 81 -162 kW	**46-188793**		without FlexRide; without ride height adjustment; Conditions see certificates VA: lowering (expertise): 30 mm; axle load to: 1160 kg HA: lowering (expertise): 30 mm; axle load to: 1160 kg
B12 PK	**2.8 V6 Turbo 4x4 OPC** 07/09 - 239 kW	**46-188816**		without FlexRide; without ride height adjustment; Conditions see certificates VA: lowering (expertise): 15 mm; axle load to: 1240 kg HA: lowering (expertise): 15 mm; axle load to: 1160 kg
B12 PK	**2.0 Biturbo CDTI, 2.0 Biturbo CDTI 4x4, 2.0 CDTI, 2.0 CDTI 4x4, 2.0 E85 Turbo, 2.0 Turbo, 2.0 Turbo 4x4, 2.8 V6 Turbo** 07/08 - 81 -191 kW	**46-188816**		without FlexRide; without ride height adjustment; Conditions see certificates VA: lowering (expertise): 30 mm; axle load to: 1240 kg HA: lowering (expertise): 30 mm; axle load to: 1160 kg

OPEL INSIGNIA Saloon

B4	**1.4, 1.6, 1.6 Turbo, 1.8, 2.0 Biturbo CDTI, 2.0 Biturbo CDTI 4x4, 2.0 CDTI, 2.0 CDTI 4x4, 2.0 Turbo, 2.0 Turbo 4x4, 2.0 Turbo E85, 2.8 V6 Turbo** 07/08 - 81 -191 kW	**22-183675** **22-183682**	**19-183664**	without FlexRide; with standard chassis
B6 Sport	**1.4, 1.6, 1.6 Turbo, 1.8, 2.0 Biturbo CDTI, 2.0 Biturbo CDTI 4x4, 2.0 CDTI, 2.0 CDTI 4x4, 2.0 Turbo, 2.0 Turbo 4x4, 2.0 Turbo E85, 2.8 V6 Turbo** 07/08 - 81 -191 kW	**35-167990** **35-168003**	**24-168014**	without FlexRide; with standard chassis
B6 Sport	**2.8 V6 Turbo 4x4 OPC** 07/09 - 239 kW	**35-168027** **35-168034**	**24-168045**	without IDS+ suspension; with sports suspension
B8	**1.4, 1.6, 1.6 Turbo, 1.8, 2.0 Biturbo CDTI, 2.0 Biturbo CDTI 4x4, 2.0 CDTI, 2.0 CDTI 4x4, 2.0 Turbo, 2.0 Turbo 4x4, 2.0 Turbo E85, 2.8 V6 Turbo** 07/08 - 81 -191 kW	**35-168027** **35-168034**	**24-168045**	without FlexRide; with sports suspension
B12 PK	**1.6, 1.8** 07/08 - 85 -103 kW	**46-188786**		without FlexRide; without ride height adjustment; Conditions see certificates VA: lowering (expertise): 30 mm; axle load to: 1030 kg HA: lowering (expertise): 30 mm; axle load to: 1160 kg
B12 PK	**1.6 Turbo, 2.0 Biturbo CDTI, 2.0 CDTI, 2.0 Turbo, 2.0 Turbo E85** 07/08 - 81 -162 kW	**46-188793**		without FlexRide; without ride height adjustment; Conditions see certificates VA: lowering (expertise): 30 mm; axle load to: 1160 kg HA: lowering (expertise): 30 mm; axle load to: 1160 kg
B12 PK	**2.8 V6 Turbo 4x4 OPC** 07/09 - 239 kW	**46-188816**		without FlexRide; without ride height adjustment; Conditions see certificates VA: lowering (expertise): 15 mm; axle load to: 1240 kg HA: lowering (expertise): 15 mm; axle load to: 1160 kg
B12 PK	**2.0 Biturbo CDTI, 2.0 Biturbo CDTI 4x4, 2.0 CDTI, 2.0 CDTI 4x4, 2.0 Turbo, 2.0 Turbo 4x4, 2.0 Turbo E85, 2.8 V6 Turbo** 07/08 - 81 -191 kW	**46-188816**		without FlexRide; without ride height adjustment; Conditions see certificates VA: lowering (expertise): 30 mm; axle load to: 1240 kg HA: lowering (expertise): 30 mm; axle load to: 1160 kg

OPEL

OPEL INSIGNIA Saloon

OPEL INSIGNIA Sports Tourer

B4	**1.4, 1.6, 1.6 Turbo, 1.8, 2.0 Biturbo CDTI, 2.0 Biturbo CDTI 4x4, 2.0 CDTI, 2.0 CDTI 4x4, 2.0 E85 Turbo, 2.0 Turbo, 2.0 Turbo 4x4, 2.8 V6 Turbo** 10/08 - 81 -191 kW	**22-183675** **22-183682**	**19-183664**	without FlexRide; with standard chassis
B6 Sport	**1.4, 1.6, 1.6 Turbo, 1.8, 2.0 Biturbo CDTI, 2.0 Biturbo CDTI 4x4, 2.0 CDTI, 2.0 CDTI 4x4, 2.0 E85 Turbo, 2.0 Turbo, 2.0 Turbo 4x4, 2.8 V6 Turbo** 10/08 - 81 -191 kW	**35-167990** **35-168003**	**24-168014**	without FlexRide; with standard chassis
B6 Sport	**2.8 V6 Turbo 4x4 OPC** 07/09 - 239 kW	**35-168027** **35-168034**	**24-168045**	without IDS+ suspension; with sports suspension
B8	**1.4, 1.6, 1.6 Turbo, 1.8, 2.0 Biturbo CDTI, 2.0 Biturbo CDTI 4x4, 2.0 CDTI, 2.0 CDTI 4x4, 2.0 E85 Turbo, 2.0 Turbo, 2.0 Turbo 4x4, 2.8 V6 Turbo** 10/08 - 81 -191 kW	**35-168027** **35-168034**	**24-168045**	without FlexRide; with sports suspension
B12 PK	**1.6, 1.8** 07/08 - 85 -103 kW		**46-188823**	without FlexRide; without ride height adjustment; Conditions see certificates VA: lowering (expertise): 30 mm; axle load to: 1030 kg HA: lowering (expertise): 30 mm; axle load to: 1265 kg
B12 PK	**1.6 Turbo, 2.0 Biturbo CDTI, 2.0 CDTI, 2.0 E85 Turbo, 2.0 Turbo** 07/08 - 81 -162 kW		**46-188830**	without FlexRide; without ride height adjustment; Conditions see certificates VA: lowering (expertise): 30 mm; axle load to: 1160 kg HA: lowering (expertise): 30 mm; axle load to: 1265 kg
B12 PK	**2.0 Turbo 4x4** 07/08 - 162 -184 kW		**46-188847**	without FlexRide; without ride height adjustment; Conditions see certificates VA: lowering (expertise): 30 mm; axle load to: 1160 kg HA: lowering (expertise): 30 mm; axle load to: 1355 kg
B12 PK	**2.8 V6 Turbo 4x4 OPC** 07/09 - 239 kW		**46-188854**	without FlexRide; without ride height adjustment; Conditions see certificates VA: lowering (expertise): 15 mm; axle load to: 1240 kg HA: lowering (expertise): 15 mm; axle load to: 1265 kg
B12 PK	**2.0 Biturbo CDTI 4x4, 2.0 CDTI 4x4, 2.0 Turbo 4x4, 2.8 V6 Turbo** 07/08 - 118 -191 kW		**46-188854**	without FlexRide; without ride height adjustment; Conditions see certificates VA: lowering (expertise): 30 mm; axle load to: 1240 kg HA: lowering (expertise): 30 mm; axle load to: 1265 kg

OPEL KADETT B

B3	**1.1, 1.1 S, 1.1 SR, 1.2 S, 1.7** 09/65 - 08/71 33 -55 kW		**36-162741**	with standard chassis
B4	**1.1, 1.1 S, 1.1 SR, 1.2 S, 1.7** 09/65 - 08/71 33 -55 kW		*19-019598*	
B6 Sport	**1.1, 1.1 S, 1.1 SR, 1.2 S, 1.7** 01/68 - 08/71 33 -55 kW	**24-632171**	**24-004930**	

OPEL KADETT B Estate

B4	**1.1, 1.2, 1.5** 09/65 - 07/73 33 -47 kW		*19-019598*	
B6 Sport	**1.1, 1.2, 1.5** 09/65 - 07/73 33 -47 kW	**24-632171**	**24-004930**	

OPEL KADETT B Coupe

B3	**1.1, 1.2, 1.5, 1.9** 09/65 - 08/73 33 -66 kW		**36-162741**	with standard chassis
B4	**1.1, 1.2, 1.5, 1.9** 09/65 - 08/73 33 -66 kW		*19-019598*	

OPEL				
OPEL KADETT B Coupe				
B6 Sport	**1.1, 1.2, 1.5, 1.9** 09/65 - 08/73 33 -66 kW	**24-632171**	**24-004930**	
OPEL KADETT C City				
B3	**1.0, 1.2, 1.2 S** 08/73 - 07/79 29 -44 kW	**36-162574**	**36-162741**	with standard chassis
B3	**1.6 S** 05/77 - 07/79 55 kW	**36-162550**	**36-162741**	with standard chassis
B4	**1.0, 1.2, 1.2 S, 1.6 S** 08/73 - 07/79 29 -55 kW	**19-019444**	*19-019598*	
MS	**1.0, 1.2, 1.2 S, 1.6 S** 08/73 - 07/79 29 -55 kW	**24-009089**	**24-004930**	mark: Rallye
OPEL KADETT C				
B3	**1.0, 1.2, 1.2 S** 08/73 - 07/79 29 -44 kW	**36-162574**	**36-162741**	with standard chassis
B3	**1.6 S** 05/77 - 07/79 55 kW	**36-162550**	**36-162741**	with standard chassis
B4	**1.0, 1.2, 1.2 S, 1.6 S** 08/73 - 07/79 29 -55 kW	**19-019444**		
MS	**1.0, 1.2, 1.2 S, 1.6 S** 08/73 - 07/79 29 -55 kW	**24-009089**	**24-009188**	mark: Rallye
MS	**1.0, 1.2, 1.2 S, 1.6 S** 08/73 - 07/79 29 -55 kW	**24-633369**	**24-633376**	mark: Race VA: charakteristic: 320/160 HA: charakteristic: 195/90
OPEL KADETT C Estate				
B3	**1.0, 1.2, 1.2 S** 08/73 - 07/79 29 -44 kW	**36-162574**		with standard chassis
B3	**1.6 S** 05/77 - 07/79 55 kW	**36-162550**		with standard chassis
B4	**1.0, 1.2, 1.2 S, 1.6 S** 08/73 - 07/79 29 -55 kW	**19-019444**		
B6 Sport	**1.0, 1.2, 1.2 S, 1.6 S** 08/73 - 07/79 29 -55 kW		**24-004930**	
OPEL KADETT C Coupe				
B3	**1.0, 1.2, 1.2 S** 08/73 - 07/79 29 -44 kW	**36-162567**	**36-162741**	with standard chassis
B3	**1.6 S** 05/77 - 07/79 55 kW	**36-162550**	**36-162741**	with standard chassis
B3	**1.9 GT/E, 2.0 E Rallye** 09/75 - 07/79 77 -81 kW	**36-162550**	**36-162741**	with standard chassis
B4	**1.0, 1.2, 1.2 S, 1.6 S, 1.9 GT/E, 2.0 E Rallye, 2.0 GT/E** 08/73 - 07/79 29 -85 kW	**19-019444**		
B6 Sport	**1.0, 1.2, 1.2 S, 1.6 S** 08/73 - 07/79 29 -55 kW		**24-004930**	

OPEL				
OPEL KADETT C Coupe				
B6 Sport	**1.9 GT/E, 2.0 E Rallye, 2.0 GT/E** 10/75 - 07/79 77 -85 kW	**24-009089**	**24-009188**	
MS	**1.0, 1.2, 1.2 S, 1.6 S, 1.9 GT/E, 2.0 E Rallye, 2.0 GT/E** 08/73 - 07/79 29 -85 kW	**24-009089**	**24-009188**	mark: Rallye
MS	**1.0, 1.2, 1.2 S, 1.6 S, 1.9 GT/E, 2.0 E Rallye, 2.0 GT/E** 08/73 - 07/79 29 -85 kW	**24-633369**	**24-633376**	mark: Race VA: charakteristic: 320/160 HA: charakteristic: 195/90
OPEL KADETT D (31_-34_, 41_-44_)				
B2	**1.0, 1.2, 1.2 S, 1.3 N, 1.3 S, 1.6, 1.6 D, 1.6 S** 08/79 - 08/84 30 -66 kW	**16-031302** **11-101314** SP		
B3	**1.0, 1.2, 1.2 S, 1.3 N, 1.3 S** 08/79 - 06/82 30 -55 kW	**36-162512**	**36-162390**	with standard chassis
B3	**1.0, 1.2, 1.2 S, 1.3 N, 1.3 S** 08/79 - 06/82 30 -55 kW	**36-162475**		with standard chassis; Heavy Duty Version .
B3	**1.0, 1.2, 1.2 S, 1.3 N, 1.3 S** 07/82 - 08/84 33 -55 kW		**36-162390**	with standard chassis
B3	**1.3 N, 1.3 S, 1.6, 1.6 S** 08/79 - 06/82 44 -66 kW	**36-162499**	**36-162390**	with standard chassis; automatic transmission
B3	**1.3 N, 1.3 S, 1.6, 1.6 S** 08/79 - 06/82 44 -66 kW	**36-162475**		with standard chassis; Heavy Duty Version .; automatic transmission
B3	**1.8 GT/E** 02/83 - 08/84 85 kW		**36-162390**	with standard chassis
B3	**1.6, 1.6 S** 09/79 - 06/82 51 -66 kW		**36-162390**	with standard chassis; manual transmission
B3	**1.6, 1.6 S** 07/82 - 08/84 51 -66 kW		**36-162390**	with standard chassis
B3	**1.6, 1.6 S** 07/82 - 08/84 51 -66 kW	**36-161454**		with standard chassis; Heavy Duty Version .
B3	**1.6, 1.6 S** 07/82 - 08/84 51 -66 kW	**36-161461**	**36-162390**	with standard chassis; automatic transmission
B3	**1.6, 1.6 S** 07/82 - 08/84 51 -66 kW	**36-161454**		with standard chassis; Heavy Duty Version .; automatic transmission
B3	**1.6 D** 03/82 - 06/82 40 kW	**36-162475**	**36-162390**	with standard chassis
B3	**1.6 D** 07/82 - 08/84 40 kW	**36-161461**	**36-162390**	with standard chassis
B3	**1.6 D** 07/82 - 08/84 40 kW	**36-161454**		with standard chassis; Heavy Duty Version .
B4	**1.0, 1.2, 1.2 S, 1.3 N, 1.3 S, 1.6, 1.6 D, 1.6 S, 1.8 GT/E** 08/79 - 08/84 30 -85 kW	**21-030413** **11-101314** SP	**19-019864**	
B6 Sport	**1.0, 1.2, 1.2 S, 1.3 N, 1.3 S, 1.6, 1.6 D, 1.6 S, 1.8 GT/E** 08/79 - 08/84 30 -85 kW	**34-001424**	**24-004862**	HA: firmer setting
B8	**1.0, 1.2, 1.2 S, 1.3 N, 1.3 S, 1.6, 1.6 D, 1.6 S, 1.8 GT/E** 08/79 - 08/84 30 -85 kW	**34-003114**	**24-013932**	HA: charakteristic: 107/36

OPEL				
OPEL KADETT D (31_-34_, 41_-44_)				
MS	**1.0, 1.2, 1.2 S, 1.3 N, 1.3 S, 1.6, 1.6 D, 1.6 S, 1.8 GT/E** 08/79 - 08/84 30 -85 kW	**34-001462**	**24-000925**	mark: Cup VA: charakteristic: 230/30 HA: charakteristic: 160/50
MS	**1.0, 1.2, 1.2 S, 1.3 N, 1.3 S, 1.6, 1.6 D, 1.6 S, 1.8 GT/E, 1.0, 1.2 S, 1.3 N, 1.3 S, 1.6, 1.6 D** 08/79 - 08/84 30 -85 kW	**34-030721**	*24-024846*	mark: Rallye1 VA: charakteristic: 270/120 HA: charakteristic: 210/90
OPEL KADETT D (32_,37_,39, _42)				
B2	**1.0, 1.2 S, 1.3 N, 1.3 S, 1.6, 1.6 D** 08/79 - 08/84 33 -55 kW	**16-031302** **11-101314** SP		
B3	**1.2 S** 08/79 - 06/82 44 kW	**36-162475**		with standard chassis; Heavy Duty Version .
B3	**1.0, 1.2 S, 1.3 N, 1.3 S** 08/79 - 06/82 33 -55 kW	**36-162512**	**36-162390**	with standard chassis
B3	**1.0** 09/79 - 06/82 33 kW	**36-162475**		with standard chassis; Heavy Duty Version .
B3	**1.0, 1.2 S, 1.3 N, 1.3 S** 07/82 - 08/84 33 -55 kW		**36-162390**	with standard chassis
B3	**1.3 N** 08/79 - 06/82 44 kW	**36-162475**		with standard chassis; Heavy Duty Version .
B3	**1.3 N, 1.3 S, 1.6** 08/79 - 06/82 44 -55 kW	**36-162499**	**36-162390**	with standard chassis; automatic transmission
B3	**1.3 N, 1.3 S, 1.6** 08/79 - 06/82 44 -55 kW	**36-162475**		with standard chassis; Heavy Duty Version .; automatic transmission
B3	**1.3 S** 08/79 - 06/82 55 kW	**36-162475**		with standard chassis; Heavy Duty Version .
B3	**1.6 D** 03/82 - 06/82 40 kW	**36-162475**	**36-162390**	with standard chassis
B3	**1.6 D** 07/82 - 08/84 40 kW	**36-161461**	**36-162390**	with standard chassis
B3	**1.6 D** 07/82 - 08/84 40 kW	**36-161454**		with standard chassis; Heavy Duty Version .
B3	**1.6** 09/79 - 06/82 51 -55 kW		**36-162390**	with standard chassis; manual transmission
B3	**1.6** 09/79 - 06/82 51 -55 kW	**36-162475**		with standard chassis; Heavy Duty Version .; manual transmission
B3	**1.6** 07/82 - 08/84 51 -55 kW		**36-162390**	with standard chassis
B3	**1.6** 07/82 - 08/84 51 -55 kW	**36-161454**		with standard chassis; Heavy Duty Version .
B3	**1.6** 07/82 - 08/84 51 -55 kW	**36-161461**	**36-162390**	with standard chassis; automatic transmission
B3	**1.6** 07/82 - 08/84 51 -55 kW	**36-161454**		with standard chassis; Heavy Duty Version .; automatic transmission
B4	**1.0, 1.2 S, 1.3 N, 1.3 S, 1.6, 1.6 D** 08/79 - 08/84 33 -55 kW	**21-030413** **11-101314** SP	**19-019864**	
B6 Sport	**1.0, 1.2 S, 1.3 N, 1.3 S, 1.6, 1.6 D** 08/79 - 08/84 33 -55 kW	**34-001424**	**24-004862**	HA: firmer setting

OPEL				
OPEL KADETT D (32_,37_,39, _42)				
B8	**1.0, 1.2 S, 1.3 N, 1.3 S, 1.6, 1.6 D** 08/79 - 08/84 33 -55 kW	**34-003114**	**24-013932**	HA: charakteristic: 107/36
MS	**1.0, 1.2 S, 1.3 N, 1.3 S, 1.6 D** 08/79 - 08/84 33 -55 kW	**34-001462**	**24-000925**	mark: Cup VA: charakteristic: 230/30 HA: charakteristic: 160/50
OPEL KADETT D Estate (35_, 36_, 45_, 46_)				
B2	**1.2, 1.2 S, 1.3 N, 1.3 S, 1.6, 1.6 D, 1.6 S** 08/79 - 08/84 39 -66 kW	**16-031302** **11-101314** SP		
B3	**1.2, 1.2 S, 1.3 N, 1.3 S** 08/79 - 06/82 39 -55 kW	**36-162512**	**38-133985**	with standard chassis
B3	**1.2, 1.2 S, 1.3 N, 1.3 S** 08/79 - 06/82 39 -55 kW	**36-162475**		with standard chassis; Heavy Duty Version .
B3	**1.2, 1.2 S, 1.3 N, 1.3 S** 07/82 - 08/84 39 -55 kW		**38-133985**	with standard chassis
B3	**1.3 N, 1.3 S, 1.6, 1.6 S** 08/79 - 06/82 44 -66 kW	**36-162499**	**38-133985**	with standard chassis; automatic transmission
B3	**1.3 N, 1.3 S, 1.6, 1.6 S** 08/79 - 06/82 44 -66 kW	**36-162475**		with standard chassis; Heavy Duty Version .; automatic transmission
B3	**1.6, 1.6 S** 09/79 - 06/82 51 -66 kW		**38-133985**	with standard chassis
B3	**1.6, 1.6 S** 09/79 - 06/82 51 -66 kW	**36-162475**		with standard chassis; Heavy Duty Version .
B3	**1.6, 1.6 S** 07/82 - 08/84 51 -66 kW		**38-133985**	with standard chassis
B3	**1.6, 1.6 S** 07/82 - 08/84 51 -66 kW	**36-161454**		with standard chassis; Heavy Duty Version .
B3	**1.6, 1.6 S** 07/82 - 08/84 51 -66 kW	**36-161461**	**38-133985**	with standard chassis; automatic transmission
B3	**1.6** 07/82 - 08/84 51 kW	**36-161454**		with standard chassis; Heavy Duty Version .; automatic transmission
B3	**1.6 D** 03/82 - 06/82 40 kW	**36-162475**	**38-133985**	with standard chassis
B3	**1.6 D** 07/82 - 08/84 40 kW	**36-161461**	**38-133985**	with standard chassis
B3	**1.6 D** 07/82 - 08/84 40 kW	**36-161454**		with standard chassis; Heavy Duty Version .
B4	**1.2, 1.2 S, 1.3 N, 1.3 S, 1.6, 1.6 D, 1.6 S** 08/79 - 08/84 39 -66 kW	**21-030413** **11-101314** SP		
B6 Sport	**1.2, 1.2 S, 1.3 N, 1.3 S, 1.6, 1.6 D, 1.6 S** 08/79 - 08/84 39 -66 kW	**34-001424**		
OPEL KADETT E Hatchback (33_, 34_, 43_, 44_)				
B1	**1.5 TD, 1.6 D, 1.7 D, 1.8 i, 1.8 S** 09/87 - 08/91 40 -66 kW	**12-116799**		VA: with ball bearing
B2	**1.2, 1.3 S, 1.6 S, 1.8 E, 1.8 GSI** 09/84 - 08/86 40 -85 kW	**16-031302** **11-101314** SP		

O

OPEL				
OPEL KADETT E Hatchback (33_, 34_, 43_, 44_)				
B2	**1.3 i CAT, 1.3 N, 1.6 D, 1.6 i CAT, 1.6 S, 1.8 i, 1.8 S** 06/85 - 07/88 40 -66 kW	**16-031302** **11-101314** SP		-> CH.Nr.: J2791967; -> CH.Nr.: J5273427
B2	**1.3 i CAT, 1.3 N, 1.6 D, 1.6 i, 1.6 i CAT, 1.6 S, 1.8 i, 1.8 S** 08/88 - 08/91 40 -66 kW	**16-031302** **11-101314** SP	**15-062215**	CH.Nr.: J2791968 ->; CH.Nr.: J5273428 ->
B2	**1.4 i, 1.4 S, 1.5 TD, 1.7 D** 02/89 - 08/91 42 -60 kW		**15-062215**	
B3	**1.2, 1.3 i CAT, 1.3 N, 1.3 S, 1.4 i, 1.4 S** 09/84 - 08/91 40 -60 kW	**36-133963**	**38-130366**	with standard chassis; manual transmission
B3	**1.2, 1.3 i CAT, 1.3 N, 1.3 S, 1.4 i, 1.4 S** 09/84 - 08/91 40 -60 kW	**36-130399**	**38-130366**	with standard chassis; automatic transmission
B3	**1.2, 1.3 i CAT, 1.3 N, 1.3 S, 1.4 i, 1.4 S** 09/84 - 08/91 40 -60 kW	**36-133918**	**38-130373**	with standard chassis; Heavy Duty Version .
B3	**1.8 E, 1.8 i, 1.8 S** 06/85 - 08/91 62 -74 kW	**36-133918**	**38-130373**	with standard chassis
B3	**1.8 GSI, 2.0 GSI, 2.0 GSI 16V, 2.0 GSI 16V CAT, 2.0 GSI CAT** 09/84 - 08/91 85 -115 kW	**36-161416**	**38-161438**	with standard chassis
B3	**1.6 D, 1.6 i, 1.6 i CAT, 1.6 S** 09/84 - 08/91 40 -66 kW	**36-130399**	**38-130366**	with standard chassis; manual transmission
B3	**1.6 D, 1.6 i, 1.6 i CAT, 1.6 S** 09/84 - 08/91 40 -66 kW	**36-133970**	**38-130366**	with standard chassis; automatic transmission
B3	**1.6 D, 1.6 i, 1.6 i CAT, 1.6 S** 09/84 - 08/91 40 -66 kW	**36-164318**	**38-130373**	with standard chassis; Heavy Duty Version .
B4	**1.2, 1.3 S, 1.6 S, 1.8 E, 1.8 GSI** 09/84 - 08/86 40 -85 kW	**21-030413** **11-101314** SP	**19-019864**	
B4	**1.3 i CAT, 1.3 N, 1.6 D, 1.6 i, 1.6 i CAT, 1.6 S, 1.8 i, 1.8 S** 06/85 - 07/88 40 -66 kW	**21-030413** **11-101314** SP	**19-019864**	-> CH.Nr.: J2791967; -> CH.Nr.: J5273427
B4	**1.3 i CAT, 1.3 N, 1.6 D, 1.6 i, 1.6 i CAT, 1.6 S, 1.8 i, 1.8 S** 08/88 - 08/91 40 -66 kW	**21-030413** **11-101314** SP	**19-019956**	CH.Nr.: J2791968 ->; CH.Nr.: J5273428 ->
B4	**1.4 i, 1.4 S, 1.5 TD, 1.7 D** 02/89 - 08/91 42 -60 kW	**21-030413** **11-101314** SP	**19-019956**	
B4	**2.0 GSI, 2.0 GSI 16V, 2.0 GSI 16V CAT, 2.0 GSI CAT** 09/86 - 07/88 85 -115 kW	**21-030413** **11-101314** SP	**19-019864**	-> CH.Nr.: J2791967; -> CH.Nr.: J5273427
B4	**2.0 GSI, 2.0 GSI 16V, 2.0 GSI 16V CAT, 2.0 GSI CAT** 08/88 - 08/91 85 -115 kW	**21-030413** **11-101314** SP	**19-019956**	CH.Nr.: J2791968 ->; CH.Nr.: J5273428 ->
B6 Sport	**1.2, 1.3 i CAT, 1.3 N, 1.3 S, 1.4 i, 1.4 S, 1.5 TD, 1.6 D, 1.6 i, 1.6 i CAT, 1.6 S, 1.7 D, 1.8 E, 1.8 GSI, 1.8 i, 1.8 S, 2.0 GSI, 2.0 GSI 16V, 2.0 GSI 16V CAT, 2.0 GSI CAT** 09/84 - 08/91 40 -115 kW	**34-001424**	**24-004862**	

OPEL				
OPEL KADETT E Hatchback (33_, 34_, 43_, 44_)				
B8	**1.2, 1.3 i CAT, 1.3 N, 1.3 S, 1.4 i, 1.4 S, 1.5 TD, 1.6 D, 1.6 i, 1.6 i CAT, 1.6 S, 1.7 D, 1.8 E, 1.8 GSI, 1.8 i, 1.8 S, 2.0 GSI, 2.0 GSI 16V, 2.0 GSI 16V CAT, 2.0 GSI CAT** 09/84 - 08/91 40 -115 kW	**34-003114**	**24-013932**	HA: charakteristic: 107/36
MS	**1.2, 1.3 i CAT, 1.3 N, 1.3 S, 1.4 i, 1.4 S, 1.5 TD, 1.6 D, 1.6 i, 1.6 i CAT, 1.6 S, 1.7 D, 1.8 E, 1.8 GSI, 1.8 i, 1.8 S, 2.0 GSI, 2.0 GSI 16V, 2.0 GSI 16V CAT, 2.0 GSI CAT** 09/84 - 08/91 40 -115 kW	**34-001462**	**24-000925**	mark: Cup VA: charakteristic: 230/30 HA: charakteristic: 160/50
MS	**1.2, 1.3 i CAT, 1.3 N, 1.3 S, 1.4 i, 1.4 S, 1.5 TD, 1.6 D, 1.6 i, 1.6 i CAT, 1.6 S, 1.7 D, 1.8 E, 1.8 GSI, 1.8 i, 1.8 S, 2.0 GSI, 2.0 GSI 16V, 2.0 GSI 16V CAT, 2.0 GSI CAT** 09/84 - 08/91 40 -115 kW	**34-030721**	*24-024846*	mark: Rallye1 VA: charakteristic: 270/120 HA: charakteristic: 210/90
OPEL KADETT E (39_, 49_)				
B1	**1.2, 1.3 i CAT, 1.3 N, 1.3 S, 1.4 i, 1.4 S, 1.6 i, 1.6 i CAT, 1.6 S** 09/84 - 08/86 40 -66 kW	**12-125104**		VA: with ball bearing
B1	**1.5 TD, 1.6, 1.6 D, 1.7 D, 1.8, 1.8 i, 1.8 S, 2.0 i, 2.0 i CAT** 03/87 - 08/91 40 -85 kW	**12-116799**		VA: with ball bearing
B2	**1.2, 1.3 S, 1.6 S, 1.8 i** 09/84 - 08/86 40 -85 kW	**16-031302** **11-101314** *SP*		
B2	**1.3 i CAT, 1.3 N, 1.6, 1.6 D, 1.6 i, 1.6 i CAT, 1.6 S, 1.8, 1.8 S, 2.0 i, 2.0 i CAT** 09/84 - 07/88 40 -85 kW	**16-031302** **11-101314** *SP*		-> CH.Nr.: J2791967; -> CH.Nr.: J5273427
B2	**1.3 i CAT, 1.3 N, 1.6, 1.6 D, 1.6 i, 1.6 i CAT, 1.6 S, 1.8, 1.8 S** 08/88 - 08/91 40 -84 kW	**16-031302** **11-101314** *SP*	**15-062215**	CH.Nr.: J2791968 ->; CH.Nr.: J5273428 ->
B2	**1.4 i, 1.4 S** 01/90 - 08/91 44 -55 kW	**16-031302** **11-101314** *SP*	**15-062215**	
B2	**2.0 i, 2.0 i CAT** 08/88 - 08/91 85 kW	**16-031302** **11-101314** *SP*	**15-062215**	CH.Nr.: J2791968 ->; CH.Nr.: J5273429 ->
B2	**1.5 TD, 1.7 D, 1.8 i** 07/88 - 08/91 42 -66 kW		**15-062215**	
B3	**1.2, 1.3 i CAT, 1.3 N, 1.3 S, 1.4 i, 1.4 S** 09/84 - 08/91 40 -55 kW	**36-133963**	**38-130366**	with standard chassis; manual transmission
B3	**1.2, 1.3 i CAT, 1.3 N, 1.3 S, 1.4 i, 1.4 S** 09/84 - 08/91 40 -55 kW	**36-130399**	**38-130366**	with standard chassis; automatic transmission
B3	**1.2, 1.3 i CAT, 1.3 N, 1.3 S, 1.4 i, 1.4 S** 09/84 - 08/91 40 -55 kW	**36-133918**	**38-130373**	with standard chassis; Heavy Duty Version .
B3	**1.8, 1.8 i, 1.8 S** 09/84 - 08/91 62 -85 kW	**36-133918**	**38-130373**	with standard chassis
B3	**2.0 i, 2.0 i CAT** 03/87 - 08/91 85 kW	**36-161416**	**38-161438**	with standard chassis
B3	**1.6 D, 1.6 i, 1.6 i CAT, 1.6 S** 09/84 - 08/91 40 -66 kW	**36-130399**	**38-130366**	with standard chassis; manual transmission

OPEL				
OPEL KADETT E (39_, 49_)				
B3	**1.6 D, 1.6 i, 1.6 i CAT, 1.6 S** 09/84 - 08/91 40 -66 kW	**36-133970**	**38-130366**	with standard chassis; automatic transmission
B3	**1.6 D, 1.6 i, 1.6 i CAT, 1.6 S** 09/84 - 08/91 40 -66 kW	**36-164318**	**38-130373**	with standard chassis; Heavy Duty Version .
B4	**1.2, 1.3 S, 1.6 S, 1.8 i** 09/84 - 08/86 40 -85 kW	**21-030413** **11-101314** SP	**19-019864**	
B4	**1.3 i CAT, 1.3 N, 1.6, 1.6 D, 1.6 i, 1.6 i CAT, 1.6 S, 1.8, 1.8 S, 2.0 i, 2.0 i CAT** 09/84 - 07/88 40 -85 kW	**21-030413** **11-101314** SP	**19-019864**	-> CH.Nr.: J2791967; -> CH.Nr.: J5273427
B4	**1.3 i CAT, 1.3 N, 1.6, 1.6 D, 1.6 i, 1.6 i CAT, 1.6 S, 1.8, 1.8 S, 2.0 i, 2.0 i CAT** 08/88 - 08/91 40 -85 kW	**21-030413** **11-101314** SP	**19-019956**	CH.Nr.: J2791968 ->; CH.Nr.: J5273428 ->
B4	**1.4 i, 1.4 S, 1.5 TD, 1.7 D, 1.8 i** 02/89 - 08/91 42 -66 kW	**21-030413** **11-101314** SP	**19-019956**	
B6 Sport	**1.2, 1.3 i CAT, 1.3 N, 1.3 S, 1.4 i, 1.4 S, 1.5 TD, 1.6, 1.6 D, 1.6 i, 1.6 i CAT, 1.6 S, 1.7 D, 1.8, 1.8 i, 1.8 S, 2.0 i, 2.0 i CAT** 09/84 - 08/91 40 -85 kW	**34-001424**	**24-004862**	
B8	**1.2, 1.3 i CAT, 1.3 N, 1.3 S, 1.4 i, 1.4 S, 1.5 TD, 1.6, 1.6 D, 1.6 i, 1.6 i CAT, 1.6 S, 1.7 D, 1.8, 1.8 i, 1.8 S, 2.0 i, 2.0 i CAT** 09/84 - 08/91 40 -85 kW	**34-003114**	**24-013932**	HA: charakteristic: 107/36
MS	**1.2, 1.3 i CAT, 1.3 N, 1.3 S, 1.4 i, 1.4 S, 1.5 TD, 1.6, 1.6 D, 1.6 i, 1.6 i CAT, 1.6 S, 1.7 D, 1.8, 1.8 i, 1.8 S, 2.0 i, 2.0 i CAT** 09/84 - 08/91 40 -85 kW	**34-001462**	**24-000925**	mark: Cup VA: charakteristic: 230/30 HA: charakteristic: 160/50
MS	**1.2, 1.3 i CAT, 1.3 N, 1.3 S, 1.4 i, 1.4 S, 1.5 TD, 1.6, 1.6 D, 1.6 i, 1.6 i CAT, 1.6 S, 1.7 D, 1.8, 1.8 i, 1.8 S, 2.0 i, 2.0 i CAT** 09/84 - 08/91 40 -85 kW	**34-030721**	*24-024846*	mark: Rallye1 VA: charakteristic: 270/120 HA: charakteristic: 210/90
OPEL KADETT E Estate (35_, 36_, 45_, 46_)				
B1	**1.2, 1.3 i CAT, 1.3 N, 1.3 S, 1.4 i, 1.4 S, 1.6, 1.6 i, 1.6 i CAT, 1.6 S** 09/84 - 08/86 40 -66 kW	**12-125104**		VA: with ball bearing
B1	**1.5 TD, 1.6 D, 1.7 D, 1.8 E, 1.8 i, 1.8 S, 2.0 i, 2.0 i CAT** 09/87 - 08/91 40 -85 kW	**12-116799**		VA: with ball bearing
B2	**1.2, 1.3 i CAT, 1.3 N, 1.3 S, 1.4 i, 1.4 S, 1.5 TD, 1.6, 1.6 D, 1.6 i, 1.6 i CAT, 1.6 S, 1.7 D, 1.8 E, 1.8 i, 1.8 S, 2.0 i, 2.0 i CAT** 09/84 - 08/91 40 -85 kW	**16-031548** **11-101314** SP	**15-069115**	
B3	**1.2, 1.3 i CAT, 1.3 N, 1.3 S** 09/84 - 09/85 40 -55 kW	**36-133963**	**38-133985**	with standard chassis; manual transmission
B3	**1.2, 1.3 i CAT, 1.3 N, 1.3 S, 1.4 i, 1.4 S** 10/85 - 08/91 40 -55 kW	**36-133963**	**38-130380**	with standard chassis; manual transmission
B3	**1.2, 1.3 N, 1.3 S** 09/84 - 09/85 40 -55 kW	**36-130399**	**38-133985**	with standard chassis; automatic transmission

O

OPEL				
OPEL KADETT E Estate (35_, 36_, 45_, 46_)				
B3	**1.2, 1.3 i CAT, 1.3 N, 1.3 S, 1.4 i, 1.4 S** 10/85 - 08/91 40 -55 kW	**36-130399**	**38-130380**	with standard chassis; automatic transmission
B3	**1.2, 1.3 N, 1.3 S** 09/84 - 09/85 40 -55 kW	**36-133918**	**38-133985**	with standard chassis; Heavy Duty Version .
B3	**1.2, 1.3 i CAT, 1.3 N, 1.3 S, 1.4 i, 1.4 S** 10/85 - 08/91 40 -55 kW	**36-133918**	**38-130380**	with standard chassis; Heavy Duty Version .
B3	**1.6, 1.6 D, 1.6 i, 1.6 i CAT, 1.6 S** 10/85 - 08/91 40 -66 kW	**36-130399**	**38-130380**	with standard chassis; manual transmission
B3	**1.6, 1.6 D, 1.6 i, 1.6 i CAT, 1.6 S** 10/85 - 08/91 40 -66 kW	**36-133970**	**38-130380**	with standard chassis; automatic transmission
B3	**1.6, 1.6 D, 1.6 i, 1.6 i CAT, 1.6 S** 10/85 - 08/91 40 -66 kW	**36-164318**	**38-130380**	with standard chassis; Heavy Duty Version .
B3	**1.8 i** 09/84 - 08/86 85 kW	**36-133918**	**38-130373**	with standard chassis
B3	**1.6 D, 1.6 S** 09/84 - 09/85 40 -66 kW	**36-130399**	**38-133985**	with standard chassis; manual transmission
B3	**1.6 D, 1.6 S** 09/84 - 09/85 40 -66 kW	**36-133970**	**38-133985**	with standard chassis; automatic transmission
B3	**1.6 D, 1.6 S** 09/84 - 09/85 40 -66 kW	**36-164318**	**38-133985**	with standard chassis; Heavy Duty Version .
B4	**1.2, 1.3 i CAT, 1.3 N, 1.3 S, 1.4 i, 1.4 S, 1.5 TD, 1.6, 1.6 D, 1.6 i, 1.6 i CAT, 1.6 S, 1.7 D, 1.8 E, 1.8 i, 1.8 S, 2.0 i, 2.0 i CAT** 09/84 - 08/91 40 -85 kW	**21-030413** **11-101314** *SP*	**19-019772**	
B6 Sport	**1.2, 1.3 i CAT, 1.3 N, 1.3 S, 1.4 i, 1.4 S, 1.5 TD, 1.6, 1.6 D, 1.6 i, 1.6 i CAT, 1.6 S, 1.7 D, 1.8 E, 1.8 i, 1.8 S, 2.0 i, 2.0 i CAT** 09/84 - 08/91 40 -85 kW	**34-001424**	**24-015233**	
B6 Sport	**1.2, 1.3 i CAT, 1.3 N, 1.3 S, 1.4 i, 1.4 S, 1.5 TD, 1.6, 1.6 D, 1.6 i, 1.6 i CAT, 1.6 S, 1.7 D, 1.8 E, 1.8 i, 1.8 S, 2.0 i, 2.0 i CAT** 09/84 - 08/91 40 -85 kW	**34-001424**	**24-016476**	HA: firmer setting
B8	**1.2, 1.3 i CAT, 1.3 N, 1.3 S, 1.4 i, 1.4 S, 1.5 TD, 1.6, 1.6 D, 1.6 i, 1.6 i CAT, 1.6 S, 1.7 D, 1.8 E, 1.8 i, 1.8 S, 2.0 i, 2.0 i CAT** 09/84 - 08/91 40 -85 kW	**34-003114**	**24-016483**	
OPEL KADETT E Convertible (43B_)				
B1	**1.3 S, 1.4 i, 1.4 S, 1.6 i, 1.6 i CAT** 10/86 - 02/93 44 -60 kW	**12-125104**		VA: with ball bearing
B1	**2.0, 2.0 GSi, 2.0 i, 2.0 i CAT** 10/86 - 02/93 85 -115 kW	**12-116799**		VA: with ball bearing
B2	**1.3 S, 1.6 i, 1.6 i CAT, 2.0 i, 2.0 i CAT** 10/86 - 07/88 55 -85 kW	**16-031302** **11-101314** *SP*		-> CH.Nr.: J2791967; -> CH.Nr.: J5273427
B2	**1.3 S, 1.6 i, 1.6 i CAT, 2.0, 2.0 GSi, 2.0 i, 2.0 i CAT** 08/88 - 02/93 55 -115 kW	**16-031302** **11-101314** *SP*	**15-062215**	CH.Nr.: J2791967 ->; CH.Nr.: J5273427 ->

OPEL				
OPEL KADETT E Convertible (43B_)				
B2	**1.4 i, 1.4 S, 1.6 i** 07/89 - 02/93 44 -60 kW	**16-031302** **11-101314** SP	**15-062215**	
B4	**1.3 S, 1.6 i, 1.6 i CAT, 2.0 i, 2.0 i CAT** 10/86 - 07/88 55 -85 kW	**21-030413** **11-101314** SP	**19-019864**	-> CH.Nr.: J5273428; -> CH.Nr.: J2791968
B4	**1.3 S, 1.6 i, 1.6 i CAT, 2.0, 2.0 GSi, 2.0 i, 2.0 i CAT** 08/88 - 02/93 55 -115 kW	**21-030413** **11-101314** SP	**19-019956**	CH.Nr.: J5273428 ->; CH.Nr.: J2791968 ->
B4	**1.4 i, 1.4 S, 1.6 i** 07/89 - 02/93 44 -60 kW	**21-030413** **11-101314** SP	**19-019956**	
B6 Sport	**1.3 S, 1.4 i, 1.4 S, 1.6 i, 1.6 i CAT, 2.0, 2.0 GSi, 2.0 i, 2.0 i CAT** 10/86 - 02/93 44 -115 kW	**34-001424**	**24-004862**	HA: firmer setting
B8	**1.3 S, 1.4 i, 1.4 S, 1.6 i, 1.6 i CAT, 2.0, 2.0 GSi, 2.0 i, 2.0 i CAT** 10/86 - 02/93 44 -115 kW	**34-003114**	**24-013932**	HA: charakteristic: 107/36
MS	**1.3 S, 1.4 i, 1.4 S, 1.6 i, 1.6 i CAT, 2.0, 2.0 GSi, 2.0 i, 2.0 i CAT** 10/86 - 02/93 44 -115 kW	**34-001462**	**24-000925**	mark: Cup VA: charakteristic: 230/30 HA: charakteristic: 160/50
MS	**1.3 S, 1.4 i, 1.4 S, 1.6 i, 1.6 i CAT, 2.0, 2.0 GSi, 2.0 i, 2.0 i CAT** 10/86 - 02/93 44 -115 kW	**34-030721**	*24-024846*	mark: Rallye1 VA: charakteristic: 270/120 HA: charakteristic: 210/90
OPEL KADETT E Box (37_, 47_)				
B1	**1.2, 1.3 N, 1.4 i, 1.6 i** 09/84 - 09/93 40 -55 kW	**12-125104**		VA: with ball bearing
B1	**1.6 D, 1.7 D, 1.8 i** 08/84 - 09/92 40 -66 kW	**12-116799**		VA: with ball bearing
B2	**1.2, 1.3 N, 1.4 i, 1.6 D, 1.6 i, 1.7 D, 1.8 i** 08/84 - 09/92 40 -66 kW	**16-031302** **11-101314** SP		
B4	**1.2, 1.3 N, 1.4 i, 1.6 D, 1.6 i, 1.7 D, 1.8 i** 08/84 - 09/92 40 -66 kW	**21-030413** **11-101314** SP	**19-019970**	
OPEL KADETT E Combo (38_, 48_)				
B1	**1.3 N, 1.3 S, 1.4 i, 1.4 S, 1.6, 1.6 i** 01/86 - 07/94 44 -60 kW	**12-125104**		VA: with ball bearing
B1	**1.6 D, 1.7 D** 01/86 - 07/94 40 -44 kW	**12-116799**		VA: with ball bearing
B2	**1.3 N, 1.3 S, 1.4 i, 1.4 S, 1.6, 1.6 D, 1.6 i, 1.7 D** 01/86 - 07/94 40 -60 kW	**16-031302** **11-101314** SP		
B4	**1.3 N, 1.3 S, 1.4 i, 1.4 S, 1.6, 1.6 D, 1.6 i, 1.7 D** 01/86 - 07/94 40 -60 kW	**21-030413** **11-101314** SP	**19-019970**	
OPEL MANTA A (58_, 59_)				
B3	**1.6, 1.6 S, 1.9 S** 09/70 - 08/75 44 -66 kW		**36-162741**	with standard chassis
B3	**1.9 GT/E** 02/74 - 08/75 77 kW		**36-162741**	with standard chassis

OPEL				
OPEL MANTA A (58_, 59_)				
B6 Sport	**1.2, 1.6, 1.6 S, 1.9 GT/E, 1.9 S** 09/70 - 08/75 44 -77 kW	**24-627726**	**24-009188**	VA: charakteristic: 310/150
OPEL MANTA B (58_, 59_)				
B3	**1.2 N, 1.2 S, 1.3 N, 1.3 S** 09/75 - 08/86 40 -55 kW	**36-162659**	**36-162604**	with standard chassis
B3	**1.6 N, 1.6 S, 1.8 S, 1.9 E, 1.9 N, 1.9 S, 2.0, 2.0 E, 2.0 S** 09/75 - 08/84 44 -81 kW	**36-162680**	**36-162604**	with standard chassis
B4	**1.2 N, 1.2 S, 1.3 N, 1.3 S, 1.6 N, 1.6 S, 1.8 S, 1.9 E, 1.9 N, 1.9 S, 2.0, 2.0 E, 2.0 S** 09/75 - 08/84 40 -81 kW	**19-019444**	*19-019604*	
B6 Sport	**1.2 N, 1.2 S, 1.3 N, 1.3 S, 1.6 N, 1.6 S, 1.8 S, 1.9 E, 1.9 N, 1.9 S, 2.0, 2.0 E, 2.0 S, 2.4 400** 09/75 - 08/84 40 -106 kW	**24-006866**	**24-008938**	VA: charakteristic: 150/60 HA: charakteristic: 220/80
B6 Sport	**1.2 N, 1.2 S, 1.3 N, 1.3 S, 1.6 N, 1.6 S, 1.8 S, 1.9 E, 1.9 N, 1.9 S, 2.0, 2.0 E, 2.0 S, 2.4 400** 09/75 - 08/84 40 -106 kW	**24-008839**	**24-008938**	mark: Rallye VA: charakteristic: 331/124 HA: charakteristic: 220/80
OPEL MANTA B CC (53_, 55_)				
B3	**1.3 N, 1.3 S** 03/79 - 08/86 44 -55 kW	**36-162659**	**36-162604**	with standard chassis
B3	**1.6, 1.6 N, 1.8 S, 1.9 N, 2.0, 2.0 E, 2.0 S** 08/76 - 08/84 44 -92 kW	**36-162680**	**36-162604**	with standard chassis
B4	**1.3 N, 1.3 S, 1.6, 1.6 N, 1.8 S, 1.9 N, 2.0, 2.0 E, 2.0 S** 08/77 - 08/84 44 -92 kW	**19-019444**	*19-019604*	
B6 Sport	**1.3 N, 1.3 S, 1.6, 1.6 N, 1.8 S, 1.9 N, 2.0, 2.0 E, 2.0 S** 08/77 - 08/84 44 -92 kW	**24-006866**	**24-008938**	VA: charakteristic: 150/60 HA: charakteristic: 220/80
B6 Sport	**1.3 N, 1.3 S, 1.6, 1.6 N, 1.8 S, 1.9 N, 2.0, 2.0 E, 2.0 S** 08/77 - 08/84 44 -92 kW	**24-008839**	**24-008938**	VA: charakteristic: 331/124 HA: charakteristic: 220/80
OPEL MERIVA				
B1	**1.3 CDTI, 1.4 16V Twinport, 1.4 16V Twinport LPG, 1.6, 1.6 16V, 1.6 Turbo, 1.7 CDTI, 1.7 DTI, 1.8** 05/03 - 05/10 48 -132 kW	**12-117376**		VA: Hard Version; without ball bearing
B3	**1.4 16V Twinport, 1.4 16V Twinport LPG, 1.6, 1.6 16V, 1.8** 05/03 - 05/10 64 -92 kW	**36-199860**	**36-202140**	with standard chassis
B3	**1.3 CDTI, 1.7 CDTI, 1.7 DTI** 09/03 - 05/10 48 -92 kW	**36-202133**	**36-199853**	with standard chassis
B4	**1.3 CDTI, 1.4 16V Twinport, 1.4 16V Twinport LPG, 1.6, 1.6 16V, 1.6 Turbo, 1.7 CDTI, 1.7 DTI, 1.8** 05/03 - 05/10 48 -132 kW	**22-110442** **22-110459**	**19-115351**	
B6 Sport	**1.3 CDTI, 1.4 16V Twinport, 1.4 16V Twinport LPG, 1.6, 1.6 16V, 1.6 Turbo, 1.7 CDTI, 1.7 DTI, 1.8** 05/03 - 05/10 48 -132 kW	**35-141068** **35-141075**	**19-148519**	

OPEL			
OPEL MERIVA			
B8 **1.3 CDTI, 1.4 16V Twinport, 1.4 16V Twinport LPG, 1.6, 1.6 16V, 1.6 Turbo, 1.7 CDTI, 1.7 DTI, 1.8** 05/03 - 05/10 48 -132 kW	**35-141099** **35-141105**	**19-148519**	
OPEL MERIVA B			
B4 **1.3 CDTI, 1.4, 1.4 ecoFlex, 1.7 CDTI** 06/10 - 55 -103 kW	**22-213778** **22-213785**	**19-213798**	with standard chassis; with off-road suspension
OPEL MONTEREY A (UBS_)			
B4 **3.1 TD, 3.2** 09/91 - 07/98 84 -130 kW	**19-061108**	**19-107141**	
B6 Offroad **3.1 TD, 3.2** 09/91 - 07/98 84 -130 kW	**24-017381**	**24-017398**	
OPEL MONZA A (22_)			
B3 **2.0 E, 2.2 E, 2.5 E, 3.0 GSE** 07/82 - 08/86 85 -132 kW		*38-161834*	with standard chassis
B3 **2.5 E, 2.8, 3.0, 3.0 GSE** 02/78 - 06/82 100 -132 kW		*38-161834*	with standard chassis
B4 **2.0 E, 2.2 E, 2.5 E, 2.8, 3.0, 3.0 GSE** 02/78 - 08/86 85 -132 kW	*21-030376* **11-101369** SP		
OPEL OMEGA A (16_, 17_, 19_)			
B3 **1.8, 1.8 N, 1.8 S, 2.0, 2.0 i, 2.4 i, 2.6 i** 09/86 - 04/94 60 -110 kW	**36-133994** **36-134007**	**38-130328**	with standard chassis
B3 **1.8, 1.8 N, 1.8 S, 2.0, 2.0 i, 2.4 i, 2.6 i** 09/86 - 04/94 60 -110 kW	**36-130474**	**38-130304**	with standard chassis; Heavy Duty Version .
B3 **1.8, 1.8 N, 1.8 S, 2.0, 2.0 i, 2.3 D, 2.3 TD, 2.3 TD Interc., 2.4 i, 2.6 i** 10/86 - 04/94 54 -110 kW		**36-201945**	with standard chassis; with ride height adjustment
B3 **2.3 D, 2.3 TD, 2.3 TD Interc., 3.0, 3.0 CAT, 3.0 24V** 10/86 - 03/94 54 -150 kW	**36-130474**	**38-130328**	with standard chassis
B3 **2.3 D, 2.3 TD, 2.3 TD Interc., 3.0, 3.0 CAT, 3.0 24V, 3.0 24V Evolution500** 10/86 - 03/94 54 -169 kW		**38-130304**	with standard chassis; Heavy Duty Version .
B4 **1.8, 1.8 N, 1.8 S, 2.0, 2.0 i, 2.3 D, 2.3 TD, 2.3 TD Interc., 2.4 i, 2.6 i, 3.0, 3.0 CAT, 3.0 24V** 03/87 - 04/94 54 -150 kW	**22-031204** **11-122456** SP	**19-020006**	
B6 Sport **1.8, 1.8 N, 1.8 S, 2.0, 2.0 i, 2.3 D, 2.3 TD, 2.3 TD Interc., 2.4 i, 2.6 i, 3.0, 3.0 CAT, 3.0 24V** 03/87 - 04/94 54 -150 kW	**35-000945**	**24-011105**	
B8 **1.8, 1.8 N, 1.8 S, 2.0, 2.0 i, 2.3 D, 2.3 TD, 2.3 TD Interc., 2.4 i, 2.6 i, 3.0, 3.0 CAT, 3.0 24V, 3.0 24V Evolution500, 3.6 24V Lotus** 03/87 - 04/94 54 -277 kW	**35-003717**	**24-015288**	

OPEL				
OPEL OMEGA A Estate (66_, 67_)				
B3	**1.8, 1.8 N, 1.8 S, 2.0, 2.0 i, 2.4 i, 2.6, 2.6 i** 09/86 - 04/94 60 -135 kW	**36-133994** **36-134007**	**38-130304**	with standard chassis
B3	**1.8, 1.8 N, 1.8 S, 2.0, 2.0 i, 2.4 i, 2.6, 2.6 i** 09/86 - 04/94 60 -135 kW	**36-130474**	**38-130311**	with standard chassis; Heavy Duty Version .
B3	**1.8, 1.8 N, 1.8 S, 2.0, 2.0 i, 2.3 D, 2.3 TD, 2.3 TD Interc., 2.4 i, 2.6, 2.6 i, 3.0, 3.0 CAT, 3.0 24V** 03/87 - 04/94 54 -147 kW		**36-201945**	with standard chassis; with ride height adjustment
B3	**2.3 D, 2.3 TD, 2.3 TD Interc., 3.0, 3.0 CAT, 3.0 24V** 09/86 - 03/94 54 -147 kW	**36-130474**	**38-130304**	with standard chassis
B3	**2.3 D, 2.3 TD, 2.3 TD Interc., 3.0, 3.0 CAT, 3.0 24V** 09/86 - 03/94 54 -147 kW		**38-130311**	with standard chassis; Heavy Duty Version .
B4	**1.8, 1.8 N, 1.8 S, 2.0, 2.0 i, 2.3 D, 2.3 TD, 2.3 TD Interc., 2.4 i, 2.6, 2.6 i, 3.0, 3.0 CAT, 3.0 24V** 03/87 - 04/94 54 -147 kW	**22-031204** **11-122456** SP	**19-028538**	without ride height adjustment
B6 Sport	**1.8, 1.8 N, 1.8 S, 2.0, 2.0 i, 2.3 D, 2.3 TD, 2.3 TD Interc., 2.4 i, 2.6, 2.6 i, 3.0, 3.0 CAT, 3.0 24V** 03/87 - 04/94 54 -147 kW	**35-000945**	**24-017701**	without ride height adjustment
B8	**1.8, 1.8 N, 1.8 S, 2.0, 2.0 i, 2.3 D, 2.3 TD, 2.3 TD Interc., 2.4 i, 2.6, 2.6 i, 3.0, 3.0 CAT, 3.0 24V** 03/87 - 04/94 54 -147 kW	**35-003717**	**24-022590**	without ride height adjustment
OPEL OMEGA B (25_, 26_, 27_)				
B3	**2.0, 2.0 16V** 03/94 - 09/98 85 -100 kW	**36-130221** **36-134014**	**38-130205**	with standard chassis
B3	**2.0, 2.0 16V** 03/94 - 09/99 85 -100 kW		**38-130304**	with standard chassis; Heavy Duty Version .
B3	**2.0, 2.0 16V, 2.0 DTI 16V, 2.2 16V, 2.2 DTI 16V, 2.5 D, 2.5 DTI, 2.5 TD, 2.5 V6, 2.6 V6, 3.0 V6, 3.2 V6** 04/94 - 07/03 74 -160 kW		**36-201945**	with standard chassis; with ride height adjustment
B3	**2.0** 10/98 - 12/00 85 kW	**36-201662**		with standard chassis
B3	**2.0 16V** 10/98 - 09/99 100 kW	**36-134021** **36-134038**	**38-130205**	with standard chassis
B3	**2.2 16V** 09/99 - 07/03 106 kW	**36-134045** **36-134489**	**38-130205**	with standard chassis
B3	**3.0 V6** 04/94 - 09/97 155 kW	**36-134021** **36-134038**	**38-130205**	with standard chassis
B3	**3.0 V6** 09/97 - 02/01 155 kW	**36-134045** **36-134489**	**38-130205**	with standard chassis
B3	**2.0 DTI 16V, 2.2 DTI 16V** 09/97 - 07/03 74 -88 kW	**36-134045** **36-134489**	**38-130205**	with standard chassis
B3	**2.0 DTI 16V, 2.2 16V, 2.2 DTI 16V, 2.5 DTI, 2.5 V6, 2.6 V6, 3.0 V6, 3.2 V6** 09/98 - 07/03 74 -160 kW		**38-130304**	with standard chassis; Heavy Duty Version .
B3	**2.5 TD, 2.5 V6** 03/94 - 09/98 96 -125 kW	**36-134021** **36-134038**	**38-130205**	with standard chassis

OPEL				
OPEL OMEGA B (25_, 26_, 27_)				
B3	**2.5 TD, 2.5 V6** 10/98 - 07/03 96 -125 kW	**36-134045** **36-134489**	**38-130205**	with standard chassis
B3	**2.5 TD, 2.5 V6, 3.0 V6** 03/94 - 09/98 96 -155 kW		**38-130304**	with standard chassis; Heavy Duty Version .
B3	**2.5 DTI, 2.6 V6, 3.2 V6** 02/01 - 07/03 110 -160 kW	**36-134045** **36-134489**	**38-130205**	with standard chassis
B4	**2.0, 2.0 16V, 2.0 DTI 16V, 2.2 16V, 2.2 DTI 16V, 2.5 D, 2.5 DTI, 2.5 TD, 2.5 V6, 2.6 V6, 3.0 V6, 3.2 V6** 04/94 - 07/03 74 -160 kW	**22-044808** **11-122456** SP	**19-028613**	
B6 Sport	**2.0, 2.0 16V, 2.0 DTI 16V, 2.2 16V, 2.2 DTI 16V, 2.5 D, 2.5 DTI, 2.5 TD, 2.5 V6, 2.6 V6, 3.0 V6, 3.2 V6** 04/94 - 07/03 74 -160 kW	**35-044253**	**24-022606**	
B8	**2.0, 2.0 16V, 2.0 DTI 16V, 2.2 16V, 2.2 DTI 16V, 2.5 D, 2.5 DTI, 2.5 TD, 2.5 V6, 2.6 V6, 3.0 V6, 3.2 V6** 04/94 - 07/03 74 -160 kW	**35-044260**	**24-022583**	
B12 PK	**2.0, 2.0 16V, 2.2 16V** 03/94 - 07/03 85 -106 kW	**46-192806**		without ride height adjustment; Conditions see certificates VA: lowering (expertise): 30 mm; axle load to: 990 kg HA: lowering (expertise): 30 mm; axle load to: 1155 kg
B12 PK	**2.0 DTI 16V, 2.2 DTI 16V, 2.5 DTI, 2.5 TD, 2.5 V6, 2.6 V6, 3.0 V6, 3.2 V6** 04/94 - 07/03 74 -160 kW	**46-192813**		without ride height adjustment; Conditions see certificates VA: lowering (expertise): 30 mm; axle load to: 1080 kg HA: lowering (expertise): 30 mm; axle load to: 1155 kg
OPEL OMEGA B Estate (21_, 22_, 23_)				
B3	**2.0, 2.0 16V** 03/94 - 09/98 85 -100 kW	**36-130221** **36-134014**	**38-130304**	with standard chassis
B3	**2.0, 2.0 16V** 03/94 - 09/99 85 -100 kW		**38-130311**	with standard chassis; Heavy Duty Version .
B3	**2.0, 2.0 16V, 2.0 DTI 16V, 2.2 16V, 2.2 DTI 16V, 2.5 DTI, 2.5 TD, 2.5 V6, 2.6, 2.6 V6, 3.0 V6, 3.2 V6** 04/94 - 07/03 74 -160 kW		**36-201945**	with standard chassis; with ride height adjustment
B3	**2.0 16V** 09/98 - 09/99 100 kW	**36-134021** **36-134038**	**38-130304**	with standard chassis
B3	**2.2 16V** 09/99 - 07/03 106 kW	**36-134045** **36-134489**	**38-130304**	with standard chassis
B3	**2.2 16V** 09/99 - 07/03 106 kW		**38-130311**	with standard chassis; Heavy Duty Version .
B3	**2.6, 3.0 V6** 04/94 - 09/97 138 -155 kW	**36-134021** **36-134038**	**38-130304**	with standard chassis
B3	**2.6, 3.0 V6** 10/97 - 02/01 138 -155 kW	**36-134045** **36-134489**	**38-130304**	with standard chassis
B3	**3.0 V6** 04/94 - 09/97 155 kW		**38-130311**	with standard chassis; Heavy Duty Version .
B3	**2.0 DTI 16V, 2.2 DTI 16V** 09/97 - 07/03 74 -88 kW	**36-134045** **36-134489**	**38-130304**	with standard chassis
B3	**2.0 DTI 16V, 2.2 DTI 16V, 3.0 V6** 10/97 - 02/01 74 -155 kW		**38-130311**	with standard chassis; Heavy Duty Version .
B3	**2.5 TD, 2.5 V6** 03/94 - 09/98 96 -125 kW	**36-134021** **36-134038**	**38-130304**	with standard chassis

OPEL				
OPEL OMEGA B Estate (21_, 22_, 23_)				
B3	**2.5 TD, 2.5 V6** 10/98 - 02/01 96 -125 kW	**36-134045** **36-134489**	**38-130304**	with standard chassis
B3	**2.5 TD, 2.5 V6** 03/94 - 09/98 96 -125 kW		**38-130311**	with standard chassis; Heavy Duty Version .
B3	**2.5 TD, 2.5 V6** 10/98 - 02/01 96 -125 kW		**38-130311**	with standard chassis; Heavy Duty Version .
B3	**2.5 DTI, 2.6 V6, 3.2 V6** 02/01 - 07/03 110 -160 kW	**36-134045** **36-134489**	**38-130304**	with standard chassis
B3	**2.5 DTI, 2.6 V6, 3.2 V6** 10/97 - 07/03 110 -160 kW		**38-130311**	with standard chassis; Heavy Duty Version .
B4	**2.0, 2.0 16V, 2.0 DTI 16V, 2.2 16V, 2.2 DTI 16V, 2.5 DTI, 2.5 TD, 2.5 V6, 2.6, 2.6 V6, 3.0 V6, 3.2 V6** 04/94 - 07/03 74 -160 kW	**22-044808** **11-122456** SP	**19-028552**	without ride height adjustment
B6 Sport	**2.0, 2.0 16V, 2.0 DTI 16V, 2.2 16V, 2.2 DTI 16V, 2.5 DTI, 2.5 TD, 2.5 V6, 2.6, 2.6 V6, 3.0 V6, 3.2 V6** 04/94 - 07/03 74 -160 kW	**35-044253**	**24-017701**	without ride height adjustment
B8	**2.0, 2.0 16V, 2.0 DTI 16V, 2.2 16V, 2.2 DTI 16V, 2.5 DTI, 2.5 TD, 2.5 V6, 2.6, 2.6 V6, 3.0 V6, 3.2 V6** 04/94 - 07/03 74 -160 kW	**35-044260**	**24-022590**	without ride height adjustment
B12 PK	**2.0, 2.0 16V, 2.2 16V** 03/94 - 07/03 85 -106 kW	**46-192820**		without ride height adjustment; Conditions see certificates VA: lowering (expertise): 30 mm; axle load to: 990 kg HA: lowering (expertise): 30 mm; axle load to: 1290 kg
B12 PK	**2.0 DTI 16V, 2.2 DTI 16V, 2.5 DTI, 2.5 TD, 2.5 V6, 2.6 V6, 3.0 V6, 3.2 V6** 04/94 - 07/03 74 -160 kW	**46-192837**		without ride height adjustment; Conditions see certificates VA: lowering (expertise): 30 mm; axle load to: 1080 kg HA: lowering (expertise): 30 mm; axle load to: 1290 kg
OPEL REKORD A				
B4	**1.5, 1.7, 1500, 1700** 02/63 - 12/65 40 -55 kW		*19-019598*	
OPEL REKORD A Coupe				
B4	**1700, 2600** 01/63 - 12/65 49 -74 kW		*19-019598*	
OPEL REKORD B				
B4	**1.5, 1.7, 1.9** 08/65 - 12/66 44 -66 kW		*19-019598*	
OPEL REKORD B Estate				
B4	**1.5, 1.7, 1.9** 08/65 - 12/66 44 -55 kW		*19-019598*	
OPEL REKORD B Coupe				
B4	**1.7, 1.9** 08/65 - 02/67 55 -66 kW		*19-019598*	
OPEL REKORD C				
B4	**1.5, 1.7, 1.7 S, 1.9, 1.9 Sprint, 2.2** 08/66 - 12/71 43 -78 kW		*19-019598*	

O

OPEL			
OPEL REKORD C			
B6 Sport **1.5, 1.7, 1.7 S, 1.9, 1.9 Sprint, 2.2** 08/66 - 12/71 43 -78 kW	**24-631136**	**24-591522**	
OPEL REKORD C Estate			
B4 **1.5, 1.7, 1.7 S, 1.9** 08/66 - 12/71 43 -66 kW		*19-019598*	
B6 Sport **1.5, 1.7, 1.7 S, 1.9** 08/66 - 12/71 43 -66 kW	**24-631136**	**24-591522**	
OPEL REKORD C Coupe			
B4 **1.7 S, 1.9, 1.9 Sprint, 2.2** 08/66 - 12/71 55 -78 kW		*19-019598*	
B6 Sport **1.7 S, 1.9, 1.9 Sprint, 2.2** 08/66 - 12/71 55 -78 kW	**24-631136**	**24-591522**	
OPEL REKORD D			
B3 **1.7, 1.7 S, 1.9, 1.9 S, 2.0** 01/72 - 08/77 44 -74 kW	**36-162857**		with standard chassis
B3 **1.7, 1.7 S, 1.9, 1.9 S, 2.0, 2.0 D, 2.1 D** 09/72 - 08/77 40 -74 kW		*36-164332*	with standard chassis; Heavy Duty Version .
B4 **2.1 D** 09/72 - 08/77 44 kW		*19-019604*	
B6 Sport **1.7, 1.7 S, 1.9, 1.9 S, 2.0, 2.0 D, 2.1 D** 09/72 - 08/77 40 -74 kW	**24-631136**	**24-631129**	
OPEL REKORD D Estate			
B3 **1.7, 1.7 S, 1.9, 1.9 S, 2.0 S** 01/72 - 08/77 44 -74 kW	**36-162857**		with standard chassis
B4 **1.7, 1.7 S, 1.9, 1.9 S, 2.0 D, 2.0 S, 2.1 D** 09/72 - 08/77 40 -74 kW		*19-020037*	
OPEL REKORD D Coupe			
B3 **1.7 S, 1.9, 1.9 S, 2.0** 01/72 - 08/77 55 -74 kW	**36-162857**		with standard chassis
B3 **1.7 S, 1.9, 1.9 S, 2.0** 01/72 - 08/77 55 -74 kW		*36-164332*	with standard chassis; Heavy Duty Version .
OPEL REKORD E (17_-19_, 11_, 14_, 16_)			
B3 **1.7, 1.9, 2.0, 2.0 E, 2.0 S** 08/77 - 06/82 44 -81 kW		*36-164332*	with standard chassis; Heavy Duty Version .
B3 **1.7, 1.8, 1.8 E, 1.8 S, 1.9, 2.0, 2.0 E, 2.0 S** 07/82 - 08/86 44 -81 kW	*36-161768*		with standard chassis
B3 **1.7, 1.8, 1.8 E, 1.8 S, 1.9, 2.0, 2.0 E, 2.0 S** 07/82 - 08/86 44 -81 kW		**36-164325**	with standard chassis; Heavy Duty Version .
B3 **2.0 D, 2.2 D** 09/77 - 06/82 43 -48 kW			with standard chassis

OPEL				
OPEL REKORD E (17_-19_, 11_, 14_, 16_)				
B3	**2.0 D, 2.2 D, 2.2 TD** 07/82 - 08/86 43 -63 kW		**36-164325**	with standard chassis
B4	**1.7, 1.8, 1.8 E, 1.8 S, 1.9, 2.0, 2.0 D, 2.0 E, 2.0 S, 2.1 D, 2.2 D, 2.2 E, 2.2 TD** 08/77 - 08/86 43 -85 kW	*21-030376* **11-101369** SP		
B6 Sport	**1.7, 1.8, 1.8 E, 1.8 S, 1.9, 2.0, 2.0 D, 2.0 E, 2.0 S, 2.1 D, 2.2 D, 2.2 E, 2.2 TD** 08/77 - 08/86 43 -85 kW	*34-001417*	**24-008938**	VA: Quick Repair Service .; Used part return required . HA: charakteristic: 220/80
OPEL REKORD E Estate (61_, 66_, 67_)				
B3	**1.7, 1.8, 1.8 E, 1.8 S, 1.9, 2.0, 2.0 E, 2.0 S** 07/82 - 08/86 44 -81 kW	*36-161768*	**36-164325**	with standard chassis
B3	**2.0 D, 2.1 D, 2.2 D** 09/77 - 06/82 43 -48 kW			with standard chassis
B3	**2.0 D, 2.2 D, 2.2 TD, 2.3 D** 07/82 - 08/86 43 -63 kW		**36-164325**	with standard chassis
B4	**1.7, 1.8, 1.8 E, 1.8 S, 1.9, 2.0, 2.0 D, 2.0 E, 2.0 S, 2.1 D, 2.2 D, 2.2 E, 2.2 TD, 2.3 D** 08/77 - 08/86 43 -85 kW	*21-030376* **11-101369** SP		
B6 Sport	**1.7, 1.8, 1.8 E, 1.8 S, 1.9, 2.0, 2.0 D, 2.0 E, 2.0 S, 2.1 D, 2.2 D, 2.2 E, 2.2 TD, 2.3 D** 08/77 - 08/86 43 -85 kW	*34-001417*	**24-008938**	VA: Quick Repair Service .; Used part return required . HA: charakteristic: 220/80
OPEL SENATOR A (29_)				
B3	**2.0 E, 2.2 E, 2.2 TD, 2.5 E, 3.0, 3.0 E** 07/82 - 12/86 63 -132 kW		*38-161834*	with standard chassis
B3	**2.5, 2.8, 3.0, 3.0 E** 02/78 - 06/82 85 -132 kW		*38-161834*	with standard chassis
B4	**2.0 E, 2.2 E, 2.2 TD, 2.5, 2.5 E, 2.8, 3.0, 3.0 E** 02/78 - 12/86 63 -132 kW	*21-030376* **11-101369** SP		
OPEL SENATOR B (29_)				
B3	**2.5 i, 2.6 i, 3.0, 3.0 24V, 3.0 i CAT** 01/88 - 09/93 103 -150 kW		*38-161834*	with standard chassis
B3	**2.5 i, 2.6 i, 3.0, 3.0 24V, 3.0 i CAT** 01/88 - 09/93 103 -150 kW		*38-161834*	with sports suspension
B4	**2.5 i, 2.6 i, 3.0, 3.0 24V, 3.0 i CAT, 3.6** 01/88 - 09/93 103 -150 kW	**22-031204** **11-122456** SP	**19-020006**	with standard chassis; without electronic suspension control
B6 Sport	**2.5 i, 2.6 i, 3.0, 3.0 24V, 3.0 i CAT, 3.6** 01/88 - 09/93 103 -150 kW	**35-000945**	**24-011105**	with standard chassis; without electronic suspension control
B8	**2.5 i, 2.6 i, 3.0, 3.0 24V, 3.0 i CAT, 3.6** 01/88 - 09/93 103 -150 kW	**35-003717**	**24-015288**	with sports suspension; without electronic suspension control

OPEL				
OPEL SIGNUM				
B1	**1.8, 1.9 CDTI, 2.0 DTI, 2.0 Turbo, 2.2 direct, 2.2 DTI, 3.0 V6 CDTI, 3.2 V6** 05/03 - 74 -155 kW	**12-224272**		VA: with ball bearing; without sport chassis; without off-road suspension
B3	**1.8** 05/03 - 90 -103 kW	**37-154585**	**38-154553**	with standard chassis
B3	**1.8** 05/03 - 90 -103 kW	**37-154585**	**38-163500**	with standard chassis; with ride height adjustment
B3	**1.8, 2.0 Turbo, 2.2 direct** 05/03 - 90 -129 kW	**37-154608**	**38-222412**	with standard chassis; Heavy Duty Version .
B3	**1.8** 05/03 - 90 -103 kW	**37-163495**	**38-163470**	with sports suspension
B3	**1.8, 2.0 Turbo, 2.2 direct** 05/03 - 90 -129 kW	**37-154639**		with sports suspension; Heavy Duty Version .
B3	**2.0 Turbo, 2.2 direct** 05/03 - 114 -129 kW	**37-154592**	**38-154553**	with standard chassis
B3	**2.0 Turbo, 2.2 direct** 05/03 - 114 -129 kW	**37-154592**	**38-163500**	with standard chassis; with ride height adjustment
B3	**2.0 Turbo, 2.2 direct** 05/03 - 114 -129 kW	**37-154622**	**38-163470**	with sports suspension
B3	**3.2 V6** 05/03 - 155 kW	**37-154608**	**38-154553**	with standard chassis
B3	**1.9 CDTI, 2.0 DTI, 2.2 DTI** 05/03 - 74 -110 kW	**37-154608**	**38-154553**	with standard chassis
B3	**1.9 CDTI, 2.0 DTI, 2.2 DTI, 3.2 V6** 05/03 - 74 -155 kW	**37-154608**	**38-163500**	with standard chassis; with ride height adjustment
B3	**1.9 CDTI, 2.0 DTI, 2.2 DTI, 3.2 V6** 05/03 - 74 -155 kW	**37-154615**	**38-222412**	with standard chassis; Heavy Duty Version .
B3	**1.9 CDTI, 2.0 DTI, 2.2 DTI, 3.2 V6** 05/03 - 74 -155 kW	**37-154639**	**38-163470**	with sports suspension
B3	**1.9 CDTI, 2.0 DTI, 2.2 DTI, 3.2 V6** 05/03 - 74 -155 kW	**37-163488**		with sports suspension; Heavy Duty Version .
B3	**3.0 V6 CDTI** 05/03 - 130 -135 kW	**37-154615**	**38-154553**	with standard chassis
B3	**3.0 V6 CDTI** 05/03 - 130 -135 kW	**37-154615**	**38-163500**	with standard chassis; with ride height adjustment
B3	**3.0 V6 CDTI** 05/03 - 130 kW		**38-222412**	with standard chassis; Heavy Duty Version .
B3	**3.0 V6 CDTI** 05/03 - 130 -135 kW	**37-163488**	**38-163470**	with sports suspension
B3	**3.0 V6 CDTI** 09/05 - 135 kW		**38-222412**	with standard chassis; Heavy Duty Version .
B4	**1.8, 1.9 CDTI, 2.0 DTI, 2.0 Turbo, 2.2 direct, 2.2 DTI, 2.8, 2.8 V6 Turbo, 3.0 V6 CDTI, 3.2 V6** 10/04 - 74 -206 kW	**22-168597** **22-168603**	**19-118758** OIO	CH.Nr.: 51000001 ->; with standard chassis; without IDS+ suspension
B4	**1.8, 1.9 CDTI, 2.0 DTI, 2.0 Turbo, 2.2 direct, 2.2 DTI, 3.0 V6 CDTI, 3.2 V6** 05/03 - 09/04 74 -155 kW	**22-118738** **22-118745**	**19-118758** OIO	-> CH.Nr.: 41999999; with standard chassis; without electronic suspension control

OPEL				
OPEL SIGNUM				
B6 Sport	**1.8, 1.9 CDTI, 2.0 DTI, 2.0 Turbo, 2.2 direct, 2.2 DTI, 2.8, 2.8 V6 Turbo, 3.0 V6 CDTI, 3.2 V6** 10/04 - 74 -206 kW	**35-192954** **35-192961**	**24-069601**	CH.Nr.: 51000001 ->; without IDS+ suspension
B6 Sport	**1.8, 1.9 CDTI, 2.0 DTI, 2.0 Turbo, 2.2 direct, 2.2 DTI, 3.0 V6 CDTI, 3.2 V6** 05/03 - 09/04 74 -155 kW	**35-110651** **35-110668**	**24-069601**	-> CH.Nr.: 41999999; without electronic suspension control
B8	**1.8, 1.9 CDTI, 2.0 DTI, 2.0 Turbo, 2.2 direct, 2.2 DTI, 2.8, 2.8 V6 Turbo, 3.0 V6 CDTI, 3.2 V6** 10/04 - 74 -206 kW	**35-192978** **35-192985**	**24-069618**	CH.Nr.: 51000001 ->; without IDS+ suspension
B8	**1.8, 1.9 CDTI, 2.0 DTI, 2.0 Turbo, 2.2 direct, 2.2 DTI, 3.0 V6 CDTI, 3.2 V6** 05/03 - 09/04 74 -155 kW	**35-110675** **35-110682**	**24-069618**	-> CH.Nr.: 41999999; without electronic suspension control
B12 PK	**1.8, 2.2 direct** 10/04 - 90 -114 kW	**46-190604**		CH.Nr.: 51000001 ->; disconect ITS+; Conditions see certificates VA: lowering (expertise): 30 mm; axle load to: 1060 kg HA: without ride height adjustment; lowering (expertise): 30 mm; axle load to: 1215 kg
B12 PK	**1.8, 2.2 direct** 05/03 - 09/04 90 -114 kW	**46-190574**		-> CH.Nr.: 41999999; disconect ITS+; Conditions see certificates VA: lowering (expertise): 30 mm; axle load to: 1060 kg HA: without ride height adjustment; lowering (expertise): 30 mm; axle load to: 1215 kg
B12 PK	**1.9 CDTI, 2.0 DTI, 2.0 Turbo, 2.2 DTI, 2.8, 2.8 V6 Turbo, 3.2 V6** 10/04 - 74 -206 kW	**46-190611**		CH.Nr.: 51000001 ->; disconect ITS+; Conditions see certificates VA: lowering (expertise): 30 mm; axle load to: 1135 kg HA: without ride height adjustment; lowering (expertise): 30 mm; axle load to: 1215 kg
B12 PK	**1.9 CDTI, 2.8, 2.8 V6 Turbo, 3.0 V6 CDTI, 3.2 V6** 10/04 - 74 -206 kW	**46-190628**		CH.Nr.: 51000001 ->; disconect ITS+; Conditions see certificates VA: lowering (expertise): 30 mm; axle load to: 1230 kg HA: lowering (expertise): 30 mm; axle load to: 1215 kg
B12 PK	**1.9 CDTI, 2.0 DTI, 2.0 Turbo, 2.2 DTI, 3.2 V6** 05/03 - 09/04 74 -155 kW	**46-190581**		-> CH.Nr.: 41999999; disconect ITS+; Conditions see certificates VA: lowering (expertise): 30 mm; axle load to: 1135 kg HA: without ride height adjustment; lowering (expertise): 30 mm; axle load to: 1215 kg
B12 PK	**1.9 CDTI, 3.0 V6 CDTI** 05/03 - 09/04 88 -130 kW	**46-190598**		-> CH.Nr.: 41999999; disconect ITS+; Conditions see certificates VA: lowering (expertise): 30 mm; axle load to: 1230 kg HA: without ride height adjustment; lowering (expertise): 30 mm; axle load to: 1215 kg
OPEL SPEEDSTER				
B16 PSS10	**2.0, 2.0 Turbo, 2.2** 09/00 - 108 -162 kW	**48-136723**		Conditions see certificates VA: lowering (expertise): 0-10 mm; axle load to: 485 kg HA: lowering (expertise): 0-20 mm; axle load to: 760 kg
OPEL TIGRA (95_)				
B1	**1.4 16V, 1.6 16V** 07/94 - 12/00 63 -78 kW	**12-224197**		VA: with ball bearing
B2	**1.4 16V, 1.6 16V** 07/94 - 12/00 63 -78 kW	**17-104104** **11-101314** SP	**15-126405**	with standard chassis
B3	**1.4 16V, 1.6 16V** 07/94 - 12/00 63 -78 kW	**36-130177**	**38-120008**	with standard chassis
B4	**1.4 16V, 1.6 16V** 07/94 - 12/00 63 -78 kW	**22-040909** **11-101314** SP	**19-126395**	with standard chassis
B4	**1.4 16V, 1.6 16V** 07/94 - 12/00 63 -78 kW	**22-040909** **11-101314** SP	**19-019727**	with sports suspension
B6 Sport	**1.4 16V, 1.6 16V** 07/94 - 12/00 63 -78 kW	**35-040590**	**24-000857**	

OPEL				
OPEL TIGRA (95_)				
B8	**1.4 16V, 1.6 16V** 07/94 - 12/00 63 -78 kW	**35-040590**	**24-000857**	
B14	**1.4 16V, 1.6 16V** 07/94 - 12/00 63 -78 kW	**47-080713**		Conditions see certificates VA: lowering (expertise): 30-50 mm; axle load to: 820 kg HA: lowering (expertise): 20-40 mm; axle load to: 700 kg
B16 PSS9	**1.4 16V, 1.6 16V** 07/94 - 12/00 63 -78 kW	**48-080767**		Conditions see certificates VA: lowering (expertise): 30-50 mm; axle load to: 820 kg HA: lowering (expertise): 20-40 mm; axle load to: 700 kg
MS	**1.4 16V, 1.6 16V** 07/94 - 12/00 63 -78 kW	*35-041757*	**24-023917**	mark: Rallye VA: charakteristic: 230/80 HA: charakteristic: 200/80
MS	**1.4 16V, 1.6 16V** 07/94 - 12/00 63 -78 kW	**35-042136**	**24-023900**	mark: Renen Gruppe N+G VA: charakteristic: 230/80; rebound: 20 mm HA: charakteristic: 200/80; rebound: 20 mm
OPEL TIGRA TwinTop				
B1	**1.3 CDTI, 1.4, 1.8** 06/04 - 51 -92 kW	**12-117390**		VA: Soft Version; without ball bearing
B3	**1.4** 06/04 - 66 kW	**36-215058**	36-219278	with standard chassis; with AC
B3	**1.8** 06/04 - 92 kW	**36-215058**	36-219278	with standard chassis; without AC
B3	**1.8** 06/04 - 92 kW	36-219261	36-219278	with standard chassis; with AC
B3	**1.3 CDTI** 06/04 - 51 kW	36-219261	36-219278	with standard chassis; without AC
B3	**1.3 CDTI** 06/04 - 51 kW	36-219650	36-219278	with standard chassis; with AC
B4	**1.3 CDTI, 1.4, 1.8** 06/04 - 51 -92 kW	**22-118714** **22-118721**	**19-108988**	with standard chassis HA: thread: M10
B4	**1.3 CDTI, 1.4, 1.8** 06/04 - 51 -92 kW	**22-118714** **22-118721** **11-101314** *SP*	**19-108995**	with standard chassis HA: thread: M14
B6 Sport	**1.3 CDTI, 1.4, 1.8** 06/04 - 51 -92 kW	**35-141068** **35-141075**	**24-141086**	with standard chassis HA: thread: M10
B6 Sport	**1.3 CDTI, 1.4, 1.8** 06/04 - 51 -92 kW	**35-141068** **35-141075**	**24-142342**	with sports suspension HA: thread: M14
B8	**1.3 CDTI, 1.4, 1.8** 06/04 - 51 -92 kW	**35-141099** **35-141105**	**24-141116**	with standard chassis HA: thread: M10
B8	**1.3 CDTI, 1.4, 1.8** 06/04 - 51 -92 kW	**35-141099** **35-141105**	**24-142342**	with sports suspension HA: thread: M14
B12 PK	**1.4, 1.8** 06/04 - 66 -92 kW	**46-194183**		Conditions see certificates VA: lowering (expertise): 30 mm; axle load to: 865 kg HA: lowering (expertise): 30 mm; axle load to: 680 kg; thread: M14
B12 PK	**1.4, 1.8** 06/04 - 66 -92 kW	**46-194190**		Conditions see certificates VA: lowering (expertise): 30 mm; axle load to: 865 kg HA: lowering (expertise): 30 mm; axle load to: 680 kg; thread: M10
B12 PK	**1.3 CDTI** 06/04 - 51 kW	**46-194206**		Conditions see certificates VA: lowering (expertise): 30 mm; axle load to: 900 kg HA: disc Brake; lowering (expertise): 30 mm; axle load to: 680 kg; thread: M14
B12 PK	**1.3 CDTI** 06/04 - 51 kW	**46-194213**		Conditions see certificates VA: lowering (expertise): 30 mm; axle load to: 900 kg HA: drum Brake; lowering (expertise): 30 mm; axle load to: 680 kg; thread: M10

OPEL

OPEL TIGRA TwinTop

B14	**1.3 CDTI, 1.4, 1.8** 06/04 - 51 -92 kW		**47-167254**	Conditions see certificates VA: lowering (expertise): 30-50 mm; axle load to: 895 kg HA: lowering (expertise): 20-40 mm; axle load to: 680 kg

OPEL VECTRA A Hatchback (88_, 89_)

B1	**1.4 S, 1.6, 1.6 i, 1.6 i CAT, 1.6 S, 1.7 D, 1.7 TD** 04/88 - 11/95 42 -65 kW	**12-117635**		VA: with ball bearing
B1	**1.8 i, 1.8 i CAT, 1.8 S, 2.0, 2.0 i, 2.0 i 16V, 2.0 i 16V CAT, 2.0 i CAT, 2.0 i GT** 04/88 - 11/95 65 -110 kW	**12-117635**		VA: with ball bearing; Soft Version
B1	**1.8 i, 1.8 i CAT, 1.8 S, 2.0, 2.0 i, 2.0 i 16V, 2.0 i 16V CAT, 2.0 i CAT, 2.0 i GT** 04/88 - 11/95 65 -110 kW	**12-116805**		VA: with ball bearing; Hard Version
B2	**1.4 S, 1.6, 1.6 i, 1.6 i CAT, 1.6 S, 1.7 D, 1.7 TD, 1.8 i, 1.8 i CAT, 1.8 S, 2.0, 2.0 i, 2.0 i CAT, 2.0 i GT** 04/88 - 11/95 42 -95 kW	**16-031333** **11-101314** SP	**15-062215**	
B3	**1.4 S** 04/88 - 06/92 55 kW	**36-161157**	**38-154515**	with standard chassis; with ride height adjustment
B3	**1.6, 1.6 i, 1.6 i CAT, 1.6 S, 1.8 i, 1.8 i CAT, 1.8 S, 2.0, 2.0 i, 2.0 i 16V, 2.0 i 16V CAT, 2.0 i CAT** 09/88 - 11/95 51 -110 kW	**36-130412**	**38-130298**	with standard chassis
B3	**1.6, 1.6 i, 1.6 i CAT, 1.6 S, 1.7 D, 1.7 TD, 1.8 i, 1.8 i CAT, 1.8 S, 2.0, 2.0 i, 2.0 i 16V, 2.0 i 16V CAT, 2.0 i CAT, 2.0 i GT** 09/88 - 11/95 42 -110 kW	**36-130443**		with standard chassis; Heavy Duty Version .
B3	**1.6, 1.6 i, 1.6 i CAT, 1.6 S, 1.8 i, 1.8 i CAT, 1.8 S, 2.0, 2.0 i, 2.0 i 16V, 2.0 i 16V CAT, 2.0 i CAT** 09/88 - 11/95 51 -110 kW		**38-154515**	with standard chassis; with ride height adjustment
B3	**1.8 i, 1.8 i CAT, 1.8 S, 2.0, 2.0 i, 2.0 i 16V, 2.0 i 16V CAT, 2.0 i CAT, 2.0 i GT** 04/88 - 11/95 65 -110 kW	**36-130429**	**38-130298**	with standard chassis; mark: GT; mark: SR
B3	**2.0 i GT** 09/88 - 11/95 95 kW	**36-130429**	**38-130298**	with standard chassis
B3	**1.7 D, 1.7 TD** 09/88 - 11/95 42 -60 kW	**36-130436**	**38-130298**	with standard chassis
B3	**1.7 D, 1.7 TD** 09/88 - 11/95 42 -60 kW		**38-154515**	with standard chassis; with ride height adjustment
B4	**1.4 S, 1.6, 1.6 i, 1.6 i CAT, 1.6 S, 1.7 D, 1.7 TD, 1.8 i, 1.8 i CAT, 1.8 S, 2.0, 2.0 i, 2.0 i 16V, 2.0 i 16V CAT, 2.0 i CAT, 2.0 i GT** 04/88 - 11/95 42 -110 kW	**21-030529** **11-101314** SP	**19-019956**	
B4	**2.0 All-wheel Drive** 08/89 - 08/95 110 kW	**21-030529** **11-101314** SP	**19-020006**	
B6 Sport	**1.4 S, 1.6, 1.6 i, 1.6 i CAT, 1.6 S, 1.7 D, 1.7 TD, 1.8 i, 1.8 i CAT, 1.8 S, 2.0, 2.0 i, 2.0 i 16V, 2.0 i 16V CAT, 2.0 i CAT, 2.0 i GT, 2.5 V6** 04/88 - 11/95 42 -125 kW	**34-003671**	**24-015554**	

BILSTEIN

OPEL

OPEL VECTRA A Hatchback (88_, 89_)

B6 Sport	**2.0 All-wheel Drive** 08/89 - 08/95 110 kW	**34-003671**	*24-016582*	
B8	**1.4 S, 1.6, 1.6 i, 1.6 i CAT, 1.6 S, 1.7 D, 1.7 TD, 1.8 i, 1.8 i CAT, 1.8 S, 2.0, 2.0 i, 2.0 i 16V, 2.0 i 16V CAT, 2.0 i CAT, 2.0 i GT, 2.5 V6** 04/88 - 11/95 42 -125 kW	**34-001592**	**24-013932**	HA: charakteristic: 107/36
B8	**2.0 All-wheel Drive** 08/89 - 08/95 110 kW	**34-001592**		
B12 PK	**1.4 S, 1.6, 1.6 i, 1.6 i CAT, 1.6 S, 1.7 D, 1.7 TD, 1.8 i, 1.8 i CAT, 1.8 S, 2.0, 2.0 i, 2.0 i 16V, 2.0 i 16V CAT, 2.0 i CAT, 2.0 i GT** 04/88 - 11/95 42 -110 kW	**46-192721**		Conditions see certificates VA: lowering (expertise): 30 mm; axle load to: 915 kg HA: lowering (expertise): 30 mm; axle load to: 830 kg
B12 PK	**2.5 V6** 02/93 - 11/95 125 kW	**46-192738**		Conditions see certificates VA: lowering (expertise): 35 mm; axle load to: 975 kg HA: lowering (expertise): 35 mm; axle load to: 830 kg

OPEL VECTRA A (86_, 87_)

B1	**1.4 S, 1.6, 1.6 i, 1.6 i CAT, 1.7 D, 1.7 TD** 09/88 - 11/95 42 -65 kW	**12-117635**		VA: with ball bearing
B1	**1.8 i CAT, 1.8 S, 1.8 S 4x4, 2.0, 2.0 i, 2.0 i 16V, 2.0 i 16V 4x4, 2.0 i 4x4, 2.0 i 4x4 CAT, 2.0 i CAT, 2.0 i Turbo 4x4, 2.5 CD 4x4, 2000 16V 4x4, 2000/GT 16V, 2000/GT 16V 4x4 CAT, 2000/GT 16V CAT** 02/90 - 11/95 65 -150 kW	**12-116805**		VA: with ball bearing; Hard Version
B1	**1.8 i CAT, 1.8 S, 1.8 S 4x4, 2.0, 2.0 i, 2.0 i 16V, 2.0 i 16V 4x4, 2.0 i 4x4, 2.0 i 4x4 CAT, 2.0 i CAT, 2.0 i Turbo 4x4, 2.5 CD 4x4, 2000 16V 4x4, 2000/GT 16V, 2000/GT 16V 4x4 CAT, 2000/GT 16V CAT** 02/90 - 11/95 65 -150 kW	**12-117635**		VA: with ball bearing; Soft Version
B2	**1.4 S, 1.6, 1.6 i, 1.6 i CAT, 1.7 D, 1.7 TD, 1.8 i CAT, 1.8 S, 2.0, 2.0 i, 2.0 i CAT** 09/88 - 11/95 42 -95 kW	**16-031333** **11-101314** SP	**15-062215**	
B3	**1.4 S** 09/88 - 06/92 55 kW	**36-161157**	**38-154515**	with standard chassis; with ride height adjustment
B3	**1.6, 1.6 i, 1.6 i CAT, 1.8 i CAT, 1.8 S, 2.0, 2.0 i, 2.0 i 16V, 2.0 i CAT** 09/88 - 11/95 51 -100 kW	**36-130412**	**38-130298**	with standard chassis
B3	**1.6, 1.6 i, 1.6 i CAT, 1.7 D, 1.7 TD, 1.8 i CAT, 1.8 S, 2.0, 2.0 i, 2.0 i 16V, 2.0 i CAT, 2000/GT 16V, 2000/GT 16V CAT** 02/90 - 11/95 42 -110 kW	**36-130443**		with standard chassis; Heavy Duty Version .
B3	**1.6, 1.6 i, 1.6 i CAT, 1.8 i CAT, 1.8 S, 2.0, 2.0 i, 2.0 i 16V, 2.0 i CAT** 09/88 - 11/95 51 -100 kW		**38-154515**	with standard chassis; with ride height adjustment
B3	**1.8 i CAT, 1.8 S, 2.0, 2.0 i, 2.0 i 16V, 2.0 i CAT, 2000/GT 16V, 2000/GT 16V CAT** 02/90 - 11/95 65 -110 kW	**36-130429**	**38-154515**	with standard chassis; mark: GT; mark: SR; with ride height adjustment
B3	**2000/GT 16V, 2000/GT 16V CAT** 01/89 - 11/95 110 kW	**36-130429**	**38-130298**	with standard chassis
B3	**1.7 D, 1.7 TD** 10/88 - 11/95 42 -60 kW	**36-130436**	**38-130298**	with standard chassis

OPEL				
OPEL VECTRA A (86_, 87_)				
B3	**1.7 D, 1.7 TD** 10/88 - 11/95 42 -60 kW		**38-154515**	with standard chassis; with ride height adjustment
B4	**1.4 S, 1.6, 1.6 i, 1.6 i CAT, 1.7 D, 1.7 TD, 1.8 i CAT, 1.8 S, 2.0, 2.0 i, 2.0 i 16V, 2.0 i CAT, 2.5 V6** 09/88 - 11/95 42 -125 kW	**21-030529** **11-101314** SP	**19-019956**	
B4	**1.8 S 4x4, 2.0 i 16V 4x4, 2.0 i 4x4, 2.0 i 4x4 CAT, 2.0 i Turbo 4x4, 2.5 CD 4x4, 2000 16V 4x4, 2000/GT 16V, 2000/GT 16V 4x4 CAT, 2000/GT 16V CAT** 01/89 - 11/95 65 -150 kW	**21-030529** **11-101314** SP	**19-020006**	
B6 Sport	**1.4 S, 1.6, 1.6 i, 1.6 i CAT, 1.7 D, 1.7 TD, 1.8 i CAT, 1.8 S, 2.0, 2.0 i, 2.0 i 16V, 2.0 i CAT, 2.5 V6** 09/88 - 11/95 42 -125 kW	**34-003671**	**24-015554**	
B6 Sport	**1.8 S 4x4, 2.0 i 16V 4x4, 2.0 i 4x4, 2.0 i 4x4 CAT, 2.0 i Turbo 4x4, 2.5 CD 4x4, 2000 16V 4x4, 2000/GT 16V, 2000/GT 16V 4x4 CAT, 2000/GT 16V CAT** 01/89 - 11/95 65 -150 kW	**34-003671**	*24-016582*	
B8	**1.6, 1.6 i, 1.6 i CAT, 1.7 D, 1.7 TD, 1.8 i CAT, 1.8 S, 2.0, 2.0 i, 2.0 i 16V, 2.0 i CAT, 2.5 V6** 09/88 - 11/95 42 -125 kW	**34-001592**	**24-013932**	HA: charakteristic: 107/36
B8	**1.8 S 4x4, 2.0 i 16V 4x4, 2.0 i 4x4, 2.0 i 4x4 CAT, 2.0 i Turbo 4x4, 2.5 CD 4x4, 2000 16V 4x4, 2000/GT 16V 4x4 CAT** 01/89 - 11/95 65 -150 kW	**34-001592**	**24-016100**	
B8	**2000/GT 16V, 2000/GT 16V CAT** 01/89 - 11/95 110 kW	**34-001592**	**24-016100**	
B12 PK	**1.4 S, 1.6, 1.6 i, 1.6 i CAT, 1.7 D, 1.7 TD, 1.8 i CAT, 1.8 S, 2.0, 2.0 i, 2.0 i 16V, 2.0 i CAT** 09/88 - 11/95 42 -100 kW	**46-192721**		Conditions see certificates VA: lowering (expertise): 30 mm; axle load to: 915 kg HA: lowering (expertise): 30 mm; axle load to: 830 kg
B12 PK	**2.5 V6** 02/93 - 11/95 125 kW	**46-192738**		Conditions see certificates VA: lowering (expertise): 35 mm; axle load to: 975 kg HA: lowering (expertise): 35 mm; axle load to: 830 kg
OPEL VECTRA B Hatchback (38_)				
B1	**1.6 i, 1.6 i 16V, 1.7 TD, 1.8 i 16V** 10/95 - 07/03 55 -92 kW	**12-117390**		VA: Soft Version; without ball bearing
B1	**2.0 DI 16V, 2.0 DTI 16V, 2.0 i, 2.0 i 16V, 2.2 DTI 16V, 2.2 i 16V** 10/95 - 07/03 60 -108 kW	**12-117376**		VA: Hard Version; without ball bearing
B3	**1.6 i, 1.6 i 16V** 10/95 - 07/03 55 -74 kW	**36-130146**	**36-130252**	with standard chassis; without ride height adjustment
B3	**1.6 i, 1.6 i 16V** 10/95 - 07/03 55 -74 kW	**36-130153**		with standard chassis; Heavy Duty Version .
B3	**1.6 i, 1.6 i 16V** 10/95 - 07/03 55 -74 kW		**36-162468**	with standard chassis; with ride height adjustment
B3	**2.0 i, 2.0 i 16V** 10/95 - 02/02 82 -100 kW	**36-130160**	**36-130252**	with standard chassis; without ride height adjustment
B3	**2.0 i, 2.0 i 16V** 10/95 - 02/02 82 -100 kW	**36-130214**		with standard chassis; Heavy Duty Version .

OPEL				
OPEL VECTRA B Hatchback (38_)				
B3	**2.0 i, 2.0 i 16V** 10/95 - 02/02 82 -100 kW		**36-162468**	with standard chassis; with ride height adjustment
B3	**1.7 TD, 1.8 i 16V** 10/95 - 07/03 60 -92 kW	**36-130153**	**36-130252**	with standard chassis; without ride height adjustment
B3	**1.7 TD, 1.8 i 16V** 10/95 - 07/03 60 -92 kW	**36-130160**		with standard chassis; Heavy Duty Version .
B3	**1.7 TD, 1.8 i 16V** 10/95 - 07/03 60 -92 kW		**36-162468**	with standard chassis; with ride height adjustment
B3	**2.0 DI 16V, 2.0 DTI 16V, 2.5, 2.5 i V6, 2.6 i V6** 10/95 - 07/03 60 -144 kW	**36-130214**	**36-130252**	with standard chassis; without ride height adjustment
B3	**2.0 DI 16V, 2.0 DTI 16V, 2.5, 2.5 i V6, 2.6 i V6** 10/95 - 07/03 60 -144 kW	**36-197880**		with standard chassis; Heavy Duty Version .
B3	**2.0 DI 16V, 2.0 DTI 16V, 2.5, 2.5 i V6, 2.6 i V6** 10/95 - 07/03 60 -144 kW		**36-162468**	with standard chassis; with ride height adjustment
B4	**1.6 i, 1.6 i 16V, 1.7 TD, 1.8 i 16V, 2.0 i, 2.0 i 16V, 2.5 i V6** 10/95 - 12/95 55 -125 kW	**22-045874** VA **22-045881** HA **11-101512** SP	**19-029344**	-> CH.Nr.: T1086823; with standard chassis HA: without ride height adjustment
B4	**1.6 i, 1.6 i 16V, 1.7 TD, 1.8 i 16V, 2.0 DI 16V, 2.0 DTI 16V, 2.0 i, 2.0 i 16V, 2.2 DTI 16V, 2.2 i 16V, 2.5, 2.5 i V6, 2.6 i V6** 01/96 - 07/03 55 -144 kW	**22-045874** VA **22-045881** HA **11-101512** SP	**19-140056**	CH.Nr.: T1086824 ->; without ride height adjustment
B6 Sport	**1.6 i, 1.6 i 16V, 1.7 TD, 1.8 i 16V, 2.0 DI 16V, 2.0 DTI 16V, 2.0 i, 2.0 i 16V, 2.2 DTI 16V, 2.2 i 16V, 2.5, 2.5 i V6, 2.6 i V6** 10/95 - 07/03 55 -144 kW	**35-164432** VA **35-164449** HA	**24-025515**	with standard chassis; with off-road suspension HA: without ride height adjustment
B8	**1.6 i, 1.6 i 16V, 1.7 TD, 1.8 i 16V, 2.0 DI 16V, 2.0 DTI 16V, 2.0 i, 2.0 i 16V, 2.2 DTI 16V, 2.2 i 16V, 2.5, 2.5 i V6, 2.6 i V6** 10/95 - 07/03 55 -144 kW	**35-164456** VA **35-164463** HA	**24-025522**	with sports suspension HA: without ride height adjustment
B12 PK	**1.6 i, 1.6 i 16V, 1.7 TD, 1.8 i 16V, 2.0 i, 2.0 i 16V, 2.2 i 16V, 2.5 i V6** 10/95 - 07/03 55 -125 kW	**46-192745**		Conditions see certificates VA: lowering (expertise): 35 mm; axle load to: 975 kg HA: without ride height adjustment; lowering (expertise): 35 mm; axle load to: 945 kg
B12 PK	**1.6 i, 1.6 i 16V** 10/95 - 07/03 55 -74 kW	**46-192783**		Conditions see certificates VA: lowering (expertise): 30 mm; axle load to: 870 kg HA: without ride height adjustment; lowering (expertise): 30 mm; axle load to: 945 kg
B12 PK	**2.0 DI 16V, 2.0 DTI 16V, 2.0 i, 2.0 i 16V, 2.2 DTI 16V, 2.5 i V6, 2.6 i V6** 10/95 - 07/03 60 -125 kW	**46-192752**		Conditions see certificates VA: lowering (expertise): 35 mm; axle load to: 1055 kg HA: without ride height adjustment; lowering (expertise): 35 mm; axle load to: 945 kg
OPEL VECTRA B (36_)				
B1	**1.6 GL, 1.6 i, 1.6 i 16V, 1.7 TD, 1.8 i 16V** 09/95 - 04/02 55 -92 kW	**12-117390**		VA: Soft Version; without ball bearing
B1	**2.0 DI 16V, 2.0 DTI 16V, 2.0 i, 2.0 i 16V, 2.2 DTI 16V, 2.2 i 16V, 2.5 i V6, 2.6 i V6** 10/95 - 04/02 60 -125 kW	**12-117376**		VA: Hard Version; without ball bearing
B3	**1.6 GL, 1.6 i, 1.6 i 16V** 09/95 - 04/02 55 -74 kW	**36-130146**	**36-130252**	with standard chassis; without ride height adjustment

OPEL				
OPEL VECTRA B (36_)				
B3	**1.6 GL, 1.6 i, 1.6 i 16V** 09/95 - 04/02 55 -74 kW	**36-130153**		with standard chassis; Heavy Duty Version .
B3	**1.6 GL, 1.6 i, 1.6 i 16V** 09/95 - 04/02 55 -74 kW		**36-162468**	with standard chassis; with ride height adjustment
B3	**2.0 i, 2.0 i 16V** 10/95 - 04/02 82 -100 kW	**36-130160**	**36-130252**	with standard chassis; without ride height adjustment
B3	**2.0 i, 2.0 i 16V** 10/95 - 04/02 82 -100 kW	**36-130214**		with standard chassis; Heavy Duty Version .
B3	**2.0 i, 2.0 i 16V** 10/95 - 04/02 82 -100 kW		**36-162468**	with standard chassis; with ride height adjustment
B3	**1.7 TD, 1.8 i 16V** 10/95 - 04/02 60 -92 kW	**36-130153**	**36-130252**	with standard chassis; without ride height adjustment
B3	**1.7 TD, 1.8 i 16V** 10/95 - 04/02 60 -92 kW	**36-130160**		with standard chassis; Heavy Duty Version .
B3	**1.7 TD, 1.8 i 16V** 10/95 - 04/02 60 -92 kW		**36-162468**	with standard chassis; with ride height adjustment
B3	**2.0 DI 16V, 2.5 i V6** 10/95 - 04/02 60 -125 kW	**36-130214**	**36-130252**	with standard chassis; without ride height adjustment
B3	**2.0 DI 16V, 2.0 DTI 16V, 2.5 i V6, 2.6 i V6** 10/95 - 04/02 60 -125 kW	**36-197880**		with standard chassis; Heavy Duty Version .
B3	**2.0 DI 16V, 2.0 DTI 16V, 2.5 i V6, 2.6 i V6** 10/95 - 04/02 60 -125 kW		**36-162468**	with standard chassis; with ride height adjustment
B4	**1.6 GL, 1.6 i, 1.6 i 16V, 1.7 TD, 1.8 i 16V, 2.0 i, 2.0 i 16V, 2.5 i V6** 09/95 - 12/95 55 -125 kW	**22-045874** **22-045881** **11-101512** SP	**19-029344**	-> CH.Nr.: T1086823; with standard chassis HA: without ride height adjustment
B4	**1.6 GL, 1.6 i, 1.6 i 16V, 1.7 TD, 1.8 i 16V, 2.0 DI 16V, 2.0 DTI 16V, 2.0 i, 2.0 i 16V, 2.2 DTI 16V, 2.2 i 16V, 2.5 i V6, 2.6 i V6** 01/96 - 04/02 55 -125 kW	**22-045874** **22-045881** **11-101512** SP	**19-140056**	CH.Nr.: T1086824 ->; with standard chassis HA: without ride height adjustment
B4	**2.6 i V6** 09/00 - 04/02 125 kW		**19-029344**	
B6 Sport	**1.6 GL, 1.6 i, 1.6 i 16V, 1.7 TD, 1.8 i 16V, 2.0 DI 16V, 2.0 DTI 16V, 2.0 i, 2.0 i 16V, 2.2 DTI 16V, 2.2 i 16V, 2.5 i V6, 2.6 i V6** 09/95 - 04/02 55 -125 kW	**35-164432** **35-164449**	**24-025515**	with standard chassis; with off-road suspension HA: without ride height adjustment
B8	**1.6 GL, 1.6 i, 1.6 i 16V, 1.7 TD, 1.8 i 16V, 2.0 DI 16V, 2.0 DTI 16V, 2.0 i, 2.0 i 16V, 2.2 DTI 16V, 2.2 i 16V, 2.5 i V6, 2.6 i V6, i 500 2.5** 09/95 - 09/00 55 -143 kW	**35-164456** **35-164463**	**24-025522**	with sports suspension HA: without ride height adjustment
B12 PK	**1.6 GL, 1.6 i, 1.6 i 16V, 1.7 TD, 1.8 i 16V, 2.0 i, 2.0 i 16V, 2.2 i 16V, 2.5 i V6** 09/95 - 09/00 55 -125 kW	**46-192745**		Conditions see certificates VA: lowering (expertise): 35 mm; axle load to: 975 kg HA: without ride height adjustment; lowering (expertise): 35 mm; axle load to: 945 kg
B12 PK	**1.6 GL, 1.6 i, 1.6 i 16V** 09/95 - 04/02 55 -74 kW	**46-192783**		Conditions see certificates VA: lowering (expertise): 30 mm; axle load to: 870 kg HA: without ride height adjustment; lowering (expertise): 30 mm; axle load to: 945 kg
B12 PK	**2.0 DI 16V, 2.0 DTI 16V, 2.0 i, 2.0 i 16V, 2.2 DTI 16V, 2.5 i V6, 2.6 i V6** 10/95 - 04/02 60 -125 kW	**46-192752**		Conditions see certificates VA: lowering (expertise): 35 mm; axle load to: 1055 kg HA: without ride height adjustment; lowering (expertise): 35 mm; axle load to: 945 kg

OPEL

OPEL VECTRA B Estate (31_)

B1	**1.6 i, 1.6 i 16V, 1.8 i 16V** 11/96 - 07/03 55 -92 kW	**12-117390**		VA: Soft Version; without ball bearing
B1	**1.7 TD, 2.0 DI 16V, 2.0 DTI 16V, 2.0 i, 2.0 i 16V, 2.2 DTI 16V, 2.2 i 16V, 2.5 i V6, 2.6 i V6** 11/96 - 07/03 60 -125 kW	**12-117376**		VA: Hard Version; without ball bearing
B3	**1.6 i, 1.6 i 16V** 11/96 - 07/02 55 -74 kW	**36-130146**	**36-130269**	with standard chassis
B3	**1.6 i, 1.6 i 16V** 11/96 - 07/02 55 -74 kW	**36-130153**		with standard chassis; Heavy Duty Version .
B3	**1.6 i, 1.6 i 16V** 11/96 - 07/02 55 -74 kW		**36-162451**	with standard chassis; with ride height adjustment
B3	**2.0 i, 2.0 i 16V** 11/96 - 02/02 82 -100 kW	**36-130160**	**36-130269**	with standard chassis; without ride height adjustment
B3	**2.0 i, 2.0 i 16V** 11/96 - 02/02 82 -100 kW	**36-130214**		with standard chassis; Heavy Duty Version .
B3	**2.0 i, 2.0 i 16V** 11/96 - 02/02 82 -100 kW		**36-162451**	with standard chassis; with ride height adjustment
B3	**1.7 TD, 1.8 i 16V** 11/96 - 07/03 60 -92 kW	**36-130153**	**36-130269**	with standard chassis; without ride height adjustment
B3	**1.7 TD, 1.8 i 16V** 11/96 - 07/03 60 -92 kW	**36-130160**		with standard chassis; Heavy Duty Version .
B3	**1.7 TD, 1.8 i 16V** 11/96 - 07/03 60 -92 kW		**36-162451**	with standard chassis; with ride height adjustment
B3	**2.0 DI 16V, 2.0 DTI 16V, 2.5 i V6, 2.6 i V6** 11/96 - 07/03 60 -125 kW	**36-130214**	**36-130269**	with standard chassis; without ride height adjustment
B3	**2.0 DI 16V, 2.0 DTI 16V, 2.5 i V6, 2.6 i V6** 11/96 - 07/03 60 -125 kW	**36-197880**		with standard chassis; Heavy Duty Version .
B3	**2.0 DI 16V, 2.0 DTI 16V, 2.5 i V6, 2.6 i V6** 11/96 - 07/03 60 -125 kW		**36-162468**	with standard chassis; with ride height adjustment
B4	**1.6 i, 1.6 i 16V, 1.8 i 16V, 2.0 DI 16V, 2.0 DTI 16V, 2.0 i, 2.0 i 16V, 2.2 DTI 16V, 2.2 i 16V, 2.5 i V6** 11/96 - CH-Nr. 55 -125 kW	**22-045874** **22-045881** **11-101512** *SP*	**19-029344**	-> CH.Nr.: W1999999; -> CH.Nr.: W7999999; -> CH.Nr.: WL; -> CH.Nr.: WP; with standard chassis HA: without ride height adjustment
B4	**1.6 i, 1.6 i 16V, 1.7 TD, 1.8 i 16V, 2.0 DI 16V, 2.0 DTI 16V, 2.0 i, 2.0 i 16V, 2.2 DTI 16V, 2.2 i 16V, 2.5 i V6, 2.6 i V6** CH-Nr. - 07/03 55 -125 kW	**22-045874** **22-045881** **11-101512** *SP*	**19-140056**	CH.Nr.: X1000001 ->; CH.Nr.: X7000001 ->; CH.Nr.: XL ->; CH.Nr.: XP ->; with standard chassis HA: without ride height adjustment
B6 Sport	**1.6 i, 1.6 i 16V, 1.7 TD, 1.8 i 16V, 2.0 DI 16V, 2.0 DTI 16V, 2.0 i, 2.0 i 16V, 2.2 DTI 16V, 2.2 i 16V, 2.5 i V6, 2.6 i V6** 11/96 - 07/03 55 -125 kW	**35-164432** **35-164449**	**24-025515**	with standard chassis; with off-road suspension HA: without ride height adjustment
B8	**1.6 i, 1.6 i 16V, 1.7 TD, 1.8 i 16V, 2.0 DI 16V, 2.0 DTI 16V, 2.0 i, 2.0 i 16V, 2.2 DTI 16V, 2.2 i 16V, 2.5 i V6, 2.6 i V6, i 500 2.5** 11/96 - 09/00 55 -143 kW	**35-164456** **35-164463**	**24-025522**	with sports suspension HA: without ride height adjustment
B12 PK	**1.6 i, 1.6 i 16V** 11/96 - 07/02 55 -74 kW	**46-192790**		Conditions see certificates VA: lowering (expertise): 30 mm; axle load to: 870 kg HA: without ride height adjustment; lowering (expertise): 30 mm; axle load to: 1025 kg

OPEL

OPEL VECTRA B Estate (31_)

B12 PK	**1.6 i, 1.6 i 16V, 1.7 TD, 1.8 i 16V, 2.0 i, 2.0 i 16V, 2.2 i 16V, 2.5 i V6** 11/96 - 09/00 55 -125 kW	**46-192769**		Conditions see certificates VA: lowering (expertise): 30 mm; axle load to: 975 kg HA: without ride height adjustment; lowering (expertise): 30 mm; axle load to: 1025 kg
B12 PK	**2.0 DI 16V, 2.0 DTI 16V, 2.0 i, 2.0 i 16V, 2.2 DTI 16V, 2.2 i 16V, 2.5 i V6, 2.6 i V6** 11/96 - 07/03 60 -125 kW	**46-192776**		Conditions see certificates VA: lowering (expertise): 30 mm; axle load to: 1055 kg HA: without ride height adjustment; lowering (expertise): 30 mm; axle load to: 1025 kg

OPEL VECTRA C GTS

B1	**1.6, 1.8, 1.8 16V, 1.9 CDTI, 2.0 16V Turbo, 2.0 DTI 16V, 2.2 16V, 2.2 direct, 2.2 DTI 16V, 2.8 V6 Turbo, 3.0 CDTI, 3.2 V6** 08/02 - 74 -206 kW	**12-224272**		VA: with ball bearing; without sport chassis; without off-road suspension
B3	**1.6** 08/05 - 74 -77 kW	**37-163433**	**38-154560**	with standard chassis
B3	**1.6** 08/05 - 74 -77 kW	**37-154622**		with standard chassis; Heavy Duty Version .
B3	**1.8, 1.8 16V** 08/02 - 90 -103 kW	**37-163433**	**38-154560**	with standard chassis; manual transmission
B3	**1.8, 1.8 16V** 08/02 - 90 -103 kW	**37-163495**	**38-154560**	with standard chassis; automatic transmission
B3	**1.8, 1.8 16V** 08/02 - 90 -103 kW	**37-154622**		with standard chassis; Heavy Duty Version .; manual transmission
B3	**1.8, 1.8 16V** 08/02 - 90 -103 kW	**37-154639**		with standard chassis; Heavy Duty Version .; automatic transmission
B3	**2.0 16V Turbo, 2.2 16V, 2.2 direct** 08/02 - 108 -129 kW	**37-154622**	**38-154560**	with standard chassis
B3	**2.0 16V Turbo, 2.2 16V, 2.2 direct** 08/02 - 108 -129 kW	**37-154639**		with standard chassis; Heavy Duty Version .
B3	**1.9 CDTI, 2.0 DTI 16V, 2.2 DTI 16V, 3.2 V6** 08/02 - 74 -155 kW	**37-154639**	**38-154560**	with standard chassis
B3	**1.9 CDTI, 2.0 DTI 16V, 2.2 DTI 16V, 3.2 V6** 08/02 - 74 -155 kW	**37-163488**		with standard chassis; Heavy Duty Version .
B3	**3.0 CDTI** 06/03 - 130 -135 kW	**37-163488**	**38-154560**	with standard chassis
B4	**1.6, 1.8, 1.8 16V, 1.9 CDTI, 2.0 16V Turbo, 2.0 DTI 16V, 2.2 16V, 2.2 direct, 2.2 DTI 16V, 2.8 V6 Turbo, 3.0 CDTI, 3.2 V6** 10/04 - 74 -206 kW	**22-168597** **22-168603**	**19-118758**	CH.Nr.: 51000001 ->; with standard chassis; without IDS+ suspension
B4	**1.8 16V, 1.9 CDTI, 2.0 16V Turbo, 2.0 DTI 16V, 2.2 16V, 2.2 direct, 2.2 DTI 16V, 3.0 CDTI, 3.2 V6** 08/02 - 09/04 74 -155 kW	**22-118738** **22-118745**	**19-118758**	-> CH.Nr.: 41999999; with standard chassis; without IDS+ suspension
B6 Sport	**1.6, 1.8, 1.8 16V, 1.9 CDTI, 2.0 16V Turbo, 2.0 DTI 16V, 2.2 16V, 2.2 direct, 2.2 DTI 16V, 2.8 V6 Turbo, 3.0 CDTI, 3.2 V6** 10/04 - 74 -206 kW	**35-192954** **35-192961**	**24-069601**	CH.Nr.: 51000001 ->; without IDS+ suspension
B6 Sport	**1.8 16V, 1.9 CDTI, 2.0 16V Turbo, 2.0 DTI 16V, 2.2 16V, 2.2 direct, 2.2 DTI 16V, 3.0 CDTI, 3.2 V6** 08/02 - 09/04 74 -155 kW	**35-110651** **35-110668**	**24-069601**	-> CH.Nr.: 41999999; without IDS+ suspension

OPEL				
OPEL VECTRA C GTS				
B8	**1.6, 1.8, 1.8 16V, 1.9 CDTI, 2.0 16V Turbo, 2.0 DTI 16V, 2.2 16V, 2.2 direct, 2.2 DTI 16V, 2.8 V6 Turbo, 3.0 CDTI, 3.2 V6** 10/04 - 74 -206 kW	**35-192978** 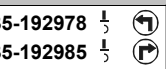 **35-192985**	**24-069618** OIO	CH.Nr.: 51000001 ->; without IDS+ suspension
B8	**1.8 16V, 1.9 CDTI, 2.0 16V Turbo, 2.0 DTI 16V, 2.2 16V, 2.2 direct, 2.2 DTI 16V, 3.0 CDTI, 3.2 V6** 08/02 - 09/04 74 -155 kW	**35-110675** 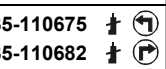 **35-110682**	**24-069618** OIO	-> CH.Nr.: 41999999; without IDS+ suspension
B12 PK	**1.6, 1.8, 1.8 16V** 10/04 - 74 -103 kW	**46-194077**		CH.Nr.: 51000001 ->; disconect ITS+; Conditions see certificates VA: lowering (expertise): 30 mm; axle load to: 965 kg HA: lowering (expertise): 30 mm; axle load to: 1035 kg
B12 PK	**1.8 16V, 1.9 CDTI, 2.0 16V Turbo, 2.2 16V, 2.2 direct, 3.2 V6** 08/02 - 09/04 88 -155 kW	**46-190536**		-> CH.Nr.: 41999999; disconect ITS+; Conditions see certificates VA: lowering (expertise): 30 mm; axle load to: 1060 kg HA: lowering (expertise): 30 mm; axle load to: 1035 kg
B12 PK	**1.8 16V** 08/02 - 09/04 90 kW	**46-190550**		-> CH.Nr.: 41999999; without IDS+ suspension; Conditions see certificates VA: lowering (expertise): 30 mm; axle load to: 965 kg HA: lowering (expertise): 30 mm; axle load to: 1035 kg
B12 PK	**1.8, 1.8 16V, 1.9 CDTI, 2.0 16V Turbo, 2.2 16V, 2.2 direct, 2.2 DTI 16V, 3.2 V6** 10/04 - 74 -155 kW	**46-194060**		CH.Nr.: 51000001 ->; disconect ITS+; Conditions see certificates VA: lowering (expertise): 30 mm; axle load to: 1060 kg HA: lowering (expertise): 30 mm; axle load to: 1035 kg
B12 PK	**1.9 CDTI, 2.0 16V Turbo, 2.0 DTI 16V, 2.2 DTI 16V, 3.2 V6** 10/04 - 74 -155 kW	**46-194008**		CH.Nr.: 51000001 ->; disconect ITS+; Conditions see certificates VA: lowering (expertise): 30 mm; axle load to: 1135 kg HA: lowering (expertise): 30 mm; axle load to: 1035 kg
B12 PK	**1.9 CDTI, 2.0 16V Turbo, 2.0 DTI 16V, 2.2 DTI 16V, 3.2 V6** 08/02 - 09/04 74 -155 kW	**46-190543**		-> CH.Nr.: 41999999; disconect ITS+; Conditions see certificates VA: lowering (expertise): 30 mm; axle load to: 1135 kg HA: lowering (expertise): 30 mm; axle load to: 1035 kg
B12 PK	**3.0 CDTI** 06/03 - 09/04 130 kW	**46-190567**		-> CH.Nr.: 41999999; without IDS+ suspension; Conditions see certificates VA: lowering (expertise): 30 mm; axle load to: 1230 kg HA: lowering (expertise): 30 mm; axle load to: 1035 kg
B12 PK	**3.0 CDTI** 10/04 - 130 -135 kW	**46-194008**		CH.Nr.: 51000001 ->; without IDS+ suspension; Conditions see certificates VA: lowering (expertise): 30 mm; axle load to: 1230 kg HA: lowering (expertise): 30 mm; axle load to: 1035 kg
OPEL VECTRA C				
B1	**1.6, 1.6 16V, 1.8, 1.8 16V, 1.9 CDTI, 2.0 16V Turbo, 2.0 DTI 16V, 2.2 16V, 2.2 direct, 2.2 DTI 16V, 2.8 V6 Turbo, 3.0 CDTI, 3.2 V6** 08/02 - 74 -188 kW	**12-224272**		VA: with ball bearing; without sport chassis; without off-road suspension
B3	**1.6, 1.6 16V** 06/04 - 74 -77 kW	**37-154578**	**38-154546**	with standard chassis
B3	**1.6, 1.6 16V** 06/04 - 74 -77 kW	**37-154578**		with standard chassis; with ride height adjustment
B3	**1.6, 1.6 16V** 06/04 - 74 -77 kW	**37-154592**	**38-154553**	with standard chassis; Heavy Duty Version .
B3	**1.8, 1.8 16V** 04/02 - 81 -103 kW	**37-154578**	**38-154546**	with standard chassis; manual transmission
B3	**1.8, 1.8 16V** 04/02 - 81 -103 kW	**37-154585**	**38-154546**	with standard chassis; automatic transmission
B3	**1.8, 1.8 16V** 04/02 - 81 -103 kW	**37-154578**		with standard chassis; with ride height adjustment; manual transmission
B3	**1.8, 1.8 16V** 04/02 - 81 -103 kW	**37-154585**		with standard chassis; with ride height adjustment; automatic transmission

OPEL

OPEL VECTRA C

B3	**1.8, 1.8 16V** 04/02 - 81 -103 kW	**37-154592**	**38-154553**	with standard chassis; Heavy Duty Version .; manual transmission
B3	**1.8, 1.8 16V** 04/02 - 81 -103 kW	**37-154608**	**38-154553**	with standard chassis; Heavy Duty Version .; automatic transmission
B3	**2.0 16V Turbo, 2.2 16V, 2.2 direct** 04/02 - 108 -129 kW	**37-154592**	**38-154546**	with standard chassis
B3	**2.0 16V Turbo, 2.2 16V, 2.2 direct** 04/02 - 108 -129 kW	**37-154592**		with standard chassis; with ride height adjustment
B3	**2.0 16V Turbo, 2.2 16V, 2.2 direct** 04/02 - 108 -129 kW	**37-154608**	**38-154553**	with standard chassis; Heavy Duty Version .
B3	**1.9 CDTI, 2.0 DTI 16V, 2.2 DTI 16V, 3.2 V6** 08/02 - 74 -155 kW	**37-154608**	**38-154546**	with standard chassis
B3	**1.9 CDTI, 2.0 DTI 16V, 2.2 DTI 16V, 3.2 V6** 08/02 - 74 -155 kW	**37-154608**		with standard chassis; with ride height adjustment
B3	**1.9 CDTI, 2.0 DTI 16V, 2.2 DTI 16V, 3.2 V6** 08/02 - 74 -155 kW	**37-154615**	**38-154553**	with standard chassis; Heavy Duty Version .
B3	**3.0 CDTI** 06/03 - 130 -135 kW	**37-154615**	**38-154546**	with standard chassis
B3	**3.0 CDTI** 06/03 - 130 -135 kW	**37-154615**		with standard chassis; with ride height adjustment
B3	**3.0 CDTI** 06/03 - 130 -135 kW		**38-154553**	with standard chassis; Heavy Duty Version .
B4	**1.6 16V, 1.8, 1.8 16V, 1.9 CDTI, 2.0 16V Turbo, 2.0 DTI 16V, 2.2 16V, 2.2 direct, 2.2 DTI 16V, 3.0 CDTI, 3.2 V6** 08/02 - 09/04 74 -155 kW	**22-118738** **22-118745**	**19-118758** OIO	-> CH.Nr.: 48999999; with standard chassis; without IDS+ suspension
B4	**1.6, 1.6 16V, 1.8, 1.8 16V, 1.9 CDTI, 2.0 16V Turbo, 2.0 DTI 16V, 2.2 16V, 2.2 direct, 2.2 DTI 16V, 2.8 V6 Turbo, 3.0 CDTI, 3.2 V6** 10/04 - 74 -188 kW	**22-168597** **22-168603**	**19-118758** OIO	CH.Nr.: 51000001 ->; with standard chassis; without IDS+ suspension
B6 Sport	**1.6 16V, 1.8, 1.8 16V, 1.9 CDTI, 2.0 16V Turbo, 2.0 DTI 16V, 2.2 16V, 2.2 direct, 2.2 DTI 16V, 3.0 CDTI, 3.2 V6** 08/02 - 09/04 74 -155 kW	**35-110651** **35-110668**	**24-069601** OIO	-> CH.Nr.: 48999999; without IDS+ suspension
B6 Sport	**1.6, 1.6 16V, 1.8, 1.8 16V, 1.9 CDTI, 2.0 16V Turbo, 2.0 DTI 16V, 2.2 16V, 2.2 direct, 2.2 DTI 16V, 2.8 V6 Turbo, 3.0 CDTI, 3.2 V6** 10/04 - 74 -188 kW	**35-192954** **35-192961**	**24-069601** OIO	CH.Nr.: 51000001 ->; without IDS+ suspension
B8	**1.6 16V, 1.8, 1.8 16V, 1.9 CDTI, 2.0 16V Turbo, 2.0 DTI 16V, 2.2 16V, 2.2 direct, 2.2 DTI 16V, 3.0 CDTI, 3.2 V6** 08/02 - 09/04 74 -155 kW	**35-110675** **35-110682**	**24-069618** OIO	-> CH.Nr.: 48999999; without IDS+ suspension
B8	**1.6, 1.6 16V, 1.8, 1.8 16V, 1.9 CDTI, 2.0 16V Turbo, 2.0 DTI 16V, 2.2 16V, 2.2 direct, 2.2 DTI 16V, 2.8 V6 Turbo, 3.0 CDTI, 3.2 V6** 10/04 - 74 -188 kW	**35-192978** **35-192985**	**24-069618** OIO	CH.Nr.: 51000001 ->; without IDS+ suspension

OPEL				
OPEL VECTRA C				
B12 PK	**1.6 16V, 1.8, 1.8 16V, 1.9 CDTI, 2.0 16V Turbo, 2.0 DTI 16V, 2.2 16V, 2.2 direct, 2.2 DTI 16V, 3.2 V6** 08/02 - 09/04 74 -155 kW	**46-190536**		-> CH.Nr.: 48999999; disconect ITS+; Conditions see certificates VA: lowering (expertise): 30 mm; axle load to: 1060 kg HA: lowering (expertise): 30 mm; axle load to: 1035 kg
B12 PK	**1.6 16V, 1.8, 1.8 16V** 04/02 - 09/04 74 -90 kW	**46-190550**		-> CH.Nr.: 48999999; disconect ITS+; Conditions see certificates VA: lowering (expertise): 30 mm; axle load to: 965 kg HA: lowering (expertise): 30 mm; axle load to: 1035 kg
B12 PK	**1.6, 1.6 16V, 1.8, 1.8 16V** 10/04 - 74 -103 kW	**46-194077**		CH.Nr.: 51000001 ->; disconect ITS+; Conditions see certificates VA: lowering (expertise): 30 mm; axle load to: 965 kg HA: lowering (expertise): 30 mm; axle load to: 1035 kg
B12 PK	**1.8, 1.8 16V, 1.9 CDTI, 2.0 16V Turbo, 2.0 DTI 16V, 2.2 16V, 2.2 direct, 2.2 DTI 16V, 3.2 V6** 10/04 - 74 -155 kW	**46-194060**		CH.Nr.: 51000001 ->; disconect ITS+; Conditions see certificates VA: lowering (expertise): 30 mm; axle load to: 1060 kg HA: lowering (expertise): 30 mm; axle load to: 1035 kg
B12 PK	**1.9 CDTI, 2.0 16V Turbo, 2.0 DTI 16V, 2.2 DTI 16V, 3.2 V6** 10/04 - 74 -155 kW	**46-194008**		CH.Nr.: 51000001 ->; disconect ITS+; Conditions see certificates VA: lowering (expertise): 30 mm; axle load to: 1135 kg HA: lowering (expertise): 30 mm; axle load to: 1035 kg
B12 PK	**1.9 CDTI, 2.0 16V Turbo, 2.0 DTI 16V, 2.2 DTI 16V, 3.2 V6** 08/02 - 09/04 74 -155 kW	**46-190543**		-> CH.Nr.: 48999999; disconect ITS+; Conditions see certificates VA: lowering (expertise): 30 mm; axle load to: 1135 kg HA: lowering (expertise): 30 mm; axle load to: 1035 kg
B12 PK	**3.0 CDTI** 06/03 - 09/04 130 kW	**46-190567**		-> CH.Nr.: 48999999; disconect ITS+; Conditions see certificates VA: lowering (expertise): 30 mm; axle load to: 1230 kg HA: lowering (expertise): 30 mm; axle load to: 1035 kg
B12 PK	**3.0 CDTI** 10/04 - 130 -135 kW	**46-194084**		CH.Nr.: 51000001 ->; disconect ITS+; Conditions see certificates VA: lowering (expertise): 30 mm; axle load to: 1230 kg HA: lowering (expertise): 30 mm; axle load to: 1035 kg
OPEL VECTRA C Estate				
B1	**1.6, 1.6 16V, 1.8, 1.9 CDTI, 2.0 DTI, 2.0 Turbo, 2.2 direct, 2.2 DTI, 2.8 V6 Turbo, 3.0 V6 CDTI, 3.2 V6** 10/03 - 74 -206 kW	**12-224272**		VA: with ball bearing; without sport chassis; without off-road suspension
B3	**1.6, 1.6 16V** 06/04 - 74 -77 kW	**37-154578**	**38-163456**	with standard chassis
B3	**1.6, 1.6 16V** 06/04 - 74 -77 kW	**37-163433**	**38-163425**	with sports suspension
B3	**1.6, 1.6 16V** 06/04 - 74 -77 kW	**37-154578**		with standard chassis; with ride height adjustment
B3	**1.6, 1.6 16V** 06/04 - 74 -77 kW	**37-154622**		with sports suspension; Heavy Duty Version .
B3	**1.6, 1.6 16V** 06/04 - 74 -77 kW	**37-154592**	**38-222412**	with standard chassis; Heavy Duty Version .
B3	**1.8** 10/03 - 90 -103 kW	**37-154578**	**38-163456**	with standard chassis; manual transmission
B3	**1.8** 10/03 - 90 -103 kW	**37-163433**	**38-163425**	with sports suspension; manual transmission
B3	**1.8** 10/03 - 90 -103 kW	**37-154585**	**38-163456**	with standard chassis; automatic transmission
B3	**1.8** 10/03 - 90 -103 kW	**37-163495**	**38-163425**	with sports suspension; automatic transmission
B3	**1.8** 10/03 - 90 -103 kW	**37-154578**		with standard chassis; with ride height adjustment; manual transmission

OPEL				
OPEL VECTRA C Estate				
B3	**1.8** 10/03 - 90 -103 kW	**37-154622**		with sports suspension; Heavy Duty Version .; manual transmission
B3	**1.8** 10/03 - 90 -103 kW	**37-154585**		with standard chassis; with ride height adjustment; automatic transmission
B3	**1.8** 10/03 - 90 -103 kW	**37-154639**		with sports suspension; Heavy Duty Version .; automatic transmission
B3	**1.8** 10/03 - 90 -103 kW	**37-154592**	**38-222412**	with standard chassis; Heavy Duty Version .; manual transmission
B3	**1.8** 10/03 - 90 -103 kW	**37-154608**	**38-222412**	with standard chassis; Heavy Duty Version .; automatic transmission
B3	**2.0 Turbo, 2.2 direct** 10/03 - 114 -129 kW	**37-154592**	**38-163456**	with standard chassis
B3	**2.0 Turbo, 2.2 direct** 10/03 - 114 -129 kW	**37-154622**	**38-163425**	with sports suspension
B3	**2.0 Turbo, 2.2 direct** 10/03 - 114 -129 kW	**37-154592**		with standard chassis; with ride height adjustment
B3	**2.0 Turbo, 2.2 direct** 10/03 - 114 -129 kW	**37-154622**		with sports suspension; Heavy Duty Version .
B3	**2.0 Turbo, 2.2 direct** 10/03 - 114 -129 kW	**37-154608**	**38-222412**	with standard chassis; Heavy Duty Version .
B3	**1.9 CDTI, 2.0 DTI, 2.2 DTI, 3.2 V6** 10/03 - 74 -155 kW	**37-154608**	**38-163456**	with standard chassis
B3	**1.9 CDTI, 2.0 DTI, 2.2 DTI, 3.2 V6** 10/03 - 74 -155 kW	**37-154639**	**38-163425**	with sports suspension
B3	**1.9 CDTI, 2.0 DTI, 2.2 DTI, 3.2 V6** 10/03 - 74 -155 kW	**37-154608**		with standard chassis; with ride height adjustment
B3	**1.9 CDTI, 2.0 DTI, 2.2 DTI, 3.2 V6** 10/03 - 74 -155 kW	**37-154615**		with sports suspension; Heavy Duty Version .
B3	**1.9 CDTI, 2.0 DTI, 2.2 DTI, 3.2 V6** 10/03 - 74 -155 kW	**37-154615**	**38-222412**	with standard chassis; Heavy Duty Version .
B3	**3.0 V6 CDTI** 10/03 - 130 -135 kW	**37-154615**	**38-163456**	with standard chassis
B3	**3.0 V6 CDTI** 10/03 - 130 -135 kW	**37-163488**	**38-163425**	with sports suspension
B3	**3.0 V6 CDTI** 10/03 - 130 kW	**37-154615**		with standard chassis; with ride height adjustment
B3	**3.0 V6 CDTI** 10/03 - 130 -135 kW		**38-222412**	with standard chassis; Heavy Duty Version .
B3	**3.0 V6 CDTI** 08/05 - 135 kW	**37-154615**		with standard chassis; with ride height adjustment
B4	**1.6 16V, 1.8, 1.9 CDTI, 2.0 DTI, 2.0 Turbo, 2.2 direct, 2.2 DTI, 3.0 V6 CDTI, 3.2 V6** 10/03 - 09/04 74 -155 kW	**22-118738** **22-118745**	**19-118758** OIO	-> CH.Nr.: 41999999; with standard chassis; without IDS+ suspension HA: without ride height adjustment
B4	**1.6, 1.6 16V, 1.8, 1.9 CDTI, 2.0 DTI, 2.0 Turbo, 2.2 direct, 2.2 DTI, 2.8 V6 Turbo, 3.0 V6 CDTI, 3.2 V6** 10/04 - 74 -206 kW	**22-168597** **22-168603**	**19-118758** OIO	CH.Nr.: 51000001 ->; with standard chassis; without IDS+ suspension

OPEL

OPEL VECTRA C Estate

B6 Sport	**1.6 16V, 1.8, 1.9 CDTI, 2.0 DTI, 2.0 Turbo, 2.2 direct, 2.2 DTI, 3.0 V6 CDTI, 3.2 V6** 10/03 - 09/04 74 -155 kW	**35-110651** **35-110668**	**24-069601**	-> CH.Nr.: 41999999; without IDS+ suspension HA: without ride height adjustment
B6 Sport	**1.6, 1.6 16V, 1.8, 1.9 CDTI, 2.0 DTI, 2.0 Turbo, 2.2 direct, 2.2 DTI, 2.8 V6 Turbo, 3.0 V6 CDTI, 3.2 V6** 10/04 - 74 -206 kW	**35-192954** **35-192961**	**24-069601**	CH.Nr.: 51000001 ->; without IDS+ suspension
B8	**1.6 16V, 1.8, 1.9 CDTI, 2.0 DTI, 2.0 Turbo, 2.2 direct, 2.2 DTI, 3.0 V6 CDTI, 3.2 V6** 10/03 - 09/04 74 -155 kW	**35-110675** **35-110682**	**24-069618**	-> CH.Nr.: 41999999; without IDS+ suspension HA: without ride height adjustment
B8	**1.6, 1.6 16V, 1.8, 1.9 CDTI, 2.0 DTI, 2.0 Turbo, 2.2 direct, 2.2 DTI, 2.8 V6 Turbo, 3.0 V6 CDTI, 3.2 V6** 10/04 - 74 -206 kW	**35-192978** **35-192985**	**24-069618**	CH.Nr.: 51000001 ->; without IDS+ suspension
B12 PK	**1.6 16V, 1.8, 1.9 CDTI, 2.0 Turbo, 2.2 direct, 3.2 V6** 10/03 - 09/04 74 -155 kW	**46-190574**		-> CH.Nr.: 41999999; disconect ITS+; Conditions see certificates VA: lowering (expertise): 30 mm; axle load to: 1060 kg HA: lowering (expertise): 30 mm; axle load to: 1215 kg
B12 PK	**1.6, 1.6 16V, 1.8, 1.9 CDTI, 2.0 DTI, 2.0 Turbo, 2.2 direct, 2.2 DTI, 3.2 V6** 10/04 - 74 -155 kW	**46-190604**		CH.Nr.: 51000001 ->; disconect ITS+; Conditions see certificates VA: lowering (expertise): 30 mm; axle load to: 1060 kg HA: lowering (expertise): 30 mm; axle load to: 1215 kg
B12 PK	**1.9 CDTI, 2.0 DTI, 2.0 Turbo, 2.2 DTI, 3.2 V6** 10/04 - 74 -155 kW	**46-190611**		CH.Nr.: 51000001 ->; disconect ITS+; Conditions see certificates VA: lowering (expertise): 30 mm; axle load to: 1135 kg HA: lowering (expertise): 30 mm; axle load to: 1215 kg
B12 PK	**1.9 CDTI, 2.0 DTI, 2.0 Turbo, 2.2 DTI, 3.2 V6** 10/03 - 09/04 74 -155 kW	**46-190581**		-> CH.Nr.: 41999999; disconect ITS+; Conditions see certificates VA: lowering (expertise): 30 mm; axle load to: 1135 kg HA: lowering (expertise): 30 mm; axle load to: 1215 kg
B12 PK	**3.0 V6 CDTI** 10/03 - 09/04 130 kW	**46-190598**		-> CH.Nr.: 41999999; disconect ITS+; Conditions see certificates VA: lowering (expertise): 30 mm; axle load to: 1230 kg HA: lowering (expertise): 30 mm; axle load to: 1215 kg
B12 PK	**3.0 V6 CDTI** 10/04 - 130 -135 kW	**46-190628**		CH.Nr.: 51000001 ->; disconect ITS+; Conditions see certificates VA: lowering (expertise): 30 mm; axle load to: 1230 kg HA: lowering (expertise): 30 mm; axle load to: 1215 kg

OPEL ZAFIRA (F75_)

B1	**1.6, 1.6 16V, 1.8, 1.8 16V, 2.0 DI 16V, 2.0 DTI 16V, 2.0 OPC, 2.2 16V, 2.2 DTI 16V** 01/02 - 06/05 60 -147 kW	**12-117376**		VA: Hard Version; without ball bearing
B3	**1.6, 1.6 16V** 04/99 - 06/05 70 -74 kW	**36-130153**	**36-774210**	with standard chassis
B3	**1.6, 1.6 16V** 04/99 - 06/05 70 -74 kW	**36-130160**	**i.V.**	with standard chassis; Heavy Duty Version .
B3	**1.8, 1.8 16V** 09/00 - 06/05 81 -92 kW	**36-130160**	**36-774210**	with standard chassis
B3	**1.8, 1.8 16V** 09/00 - 06/05 81 -92 kW	**36-130214**	**i.V.**	with standard chassis; Heavy Duty Version .
B3	**2.0 DI 16V, 2.0 DTI 16V, 2.2 16V** 10/99 - 06/05 60 -108 kW	**36-130214**	**36-774210**	with standard chassis
B3	**2.0 DI 16V, 2.0 DTI 16V, 2.2 16V** 10/99 - 06/05 60 -108 kW	**36-197880**	**i.V.**	with standard chassis; Heavy Duty Version .
B3	**2.2 DTI 16V** 01/02 - 06/05 86 -92 kW	**36-197880**	**36-774210**	with standard chassis

OPEL			
OPEL ZAFIRA (F75_)			
B4 **1.6, 1.6 16V, 1.8, 1.8 16V, 2.0 DI 16V, 2.0 DTI 16V, 2.2 16V, 2.2 DTI 16V** 01/02 - 06/05 60 -108 kW	**22-106605** ↰ **22-106612** ↱	**19-106625** OIO	
B6 Sport **1.6, 1.6 16V, 1.8, 1.8 16V, 2.0 DI 16V, 2.0 DTI 16V, 2.0 OPC, 2.2 16V, 2.2 DTI 16V** 01/02 - 06/05 60 -147 kW	**35-045984**	**24-029896** OIO	
B8 **1.6, 1.6 16V, 1.8, 1.8 16V, 2.0 DI 16V, 2.0 DTI 16V, 2.0 OPC, 2.2 16V, 2.2 DTI 16V** 01/02 - 06/05 60 -147 kW	**35-045991**	**24-029902** OIO	
B12 PK **1.6, 1.6 16V, 1.8, 1.8 16V, 2.0 DI 16V, 2.0 DTI 16V, 2.2 16V, 2.2 DTI 16V** 01/02 - 06/05 60 -108 kW	**46-194220**		Conditions see certificates VA: lowering (expertise): 30 mm; axle load to: 1075 kg HA: lowering (expertise): 30 mm; axle load to: 1130 kg
OPEL ZAFIRA			
B1 **1.6, 1.9 CDTI, 2.0, 2.2** 07/05 - 69 -177 kW	**12-224456**		VA: with ball bearing
B1 **1.6** 07/05 - 77 kW	**12-224456**		VA: with ball bearing; Engine Code: Z16XEP
B1 **1.6** 07/05 - 77 kW	**12-224449**		VA: with ball bearing; Engine Code: Z16XE1
B1 **1.8** 07/05 - 103 kW	**12-224456**		VA: with ball bearing; Engine Code: Z18XEP, Z18XER
B3 **1.6, 1.7 CDTI, 1.8** 07/05 - 69 -103 kW	**37-161804**	**38-162350**	with standard chassis
B3 **1.6, 1.7 CDTI, 1.8** 07/05 - 69 -103 kW	**37-161798**		with standard chassis; Heavy Duty Version .
B3 **1.6, 1.7 CDTI, 1.8** 07/05 - 69 -103 kW		**38-162343**	with standard chassis; with ride height adjustment
B3 **2.0, 2.2** 07/05 - 110 -177 kW	**37-161804**	**38-162350**	with standard chassis
B3 **2.0, 2.2** 07/05 - 110 -177 kW	**37-163495**		with standard chassis; Heavy Duty Version .
B3 **2.0, 2.2** 07/05 - 110 -177 kW		**38-162343**	with standard chassis; with ride height adjustment
B3 **1.9 CDTI** 07/05 - 74 -110 kW	**37-161798**	**38-162350**	with standard chassis
B3 **1.9 CDTI** 07/05 - 74 -110 kW	**37-161781**		with standard chassis; Heavy Duty Version .
B3 **1.9 CDTI** 07/05 - 74 -110 kW		**38-162343**	with standard chassis; with ride height adjustment
B4 **1.6, 1.7 CDTI, 1.8, 1.9 CDTI, 2.0, 2.2** 07/05 - 69 -177 kW	**22-141590** ↰ **22-141606** ↱	**19-141626** OIO	without electronic suspension control; without IDS+ suspension
B6 Sport **1.6, 1.7 CDTI, 1.8, 1.9 CDTI, 2.0, 2.2** 07/05 - 69 -177 kW	**35-114635** ↰ **35-114642** ↱	**24-118576** OIO	without IDS+ suspension; without electronic suspension control
B12 PK **1.6, 1.8** 07/05 - 69 -103 kW	**46-194237**		without IDS+ suspension; without electronic suspension control; Conditions see certificates VA: lowering (expertise): 30 mm; axle load to: 1030 kg HA: lowering (expertise): 30-35 mm; axle load to: 1230 kg

OPEL

OPEL ZAFIRA

B12 PK	**1.7 CDTI, 1.9 CDTI, 2.0, 2.2** 07/05 - 74 -177 kW	**46-194244**		without IDS+ suspension; without electronic suspension control; Conditions see certificates VA: lowering (expertise): 30 mm; axle load to: 1155 kg HA: lowering (expertise): 30-35 mm; axle load to: 1230 kg

OPEL ZAFIRA Van

B3	**1.7 CDTI, 1.8** 07/05 - 81 -103 kW	**37-161804**	**38-162350**	with standard chassis
B3	**1.7 CDTI, 1.8** 07/05 - 81 -103 kW	**37-161798**		with standard chassis; Heavy Duty Version .
B3	**1.7 CDTI, 1.8** 07/05 - 81 -103 kW		**38-162343**	with standard chassis; with ride height adjustment
B4	**1.7 CDTI, 1.8** 07/05 - 81 -103 kW	**22-141590** **22-141606**	**19-141626** OIO	without electronic suspension control; without IDS+ suspension
B6 Sport	**1.7 CDTI, 1.8** 07/05 - 81 -103 kW	**35-114635** **35-114642**	**24-118576** OIO	without IDS+ suspension; without electronic suspension control
B12 PK	**1.8** 07/05 - 103 kW	**46-194237**		without IDS+ suspension; without electronic suspension control; Conditions see certificates VA: lowering (expertise): 30 mm; axle load to: 1030 kg HA: lowering (expertise): 30-35 mm; axle load to: 1230 kg
B12 PK	**1.7 CDTI** 01/08 - 81 kW	**46-194244**		without IDS+ suspension; without electronic suspension control; Conditions see certificates VA: lowering (expertise): 30 mm; axle load to: 1155 kg HA: lowering (expertise): 30-35 mm; axle load to: 1230 kg

OPEL ZAFIRA (P12)

B4	**1.4, 1.8, 2.0 CDTi** 10/11 - 81 -121 kW	**22-183644** **22-183651**	**19-183633**	without FlexRide; with standard chassis
B6 Sport	**1.4, 1.8, 2.0 CDTi** 10/11 - 81 -121 kW	**35-171669** **35-171676**	**24-171687**	without FlexRide; with standard chassis
B8	**1.4, 1.8, 2.0 CDTi** 10/11 - 81 -121 kW	**35-171690** **35-171706**	**24-171717**	without FlexRide; with sports suspension

OPEL MOVANO Combi (J9)

B3	**1.9 DTI, 2.2 DTI, 2.5 CDTI, 2.5 D, 2.5 DTI, 2.8 DTI, 3.0 DTi** 07/98 - 59 -107 kW	**36-216192**		with standard chassis
B4	**1.9 DTI, 2.2 DTI, 2.5 CDTI, 2.5 D, 2.5 DTI, 2.8 DTI, 3.0 DTi** 07/98 - 59 -107 kW	**19-132792** OIO	**19-131689** OIO	VA: rim: 15"

OPEL MOVANO Box (F9)

B3	**1.9 DTI, 2.2 DTI, 2.5 CDTI, 2.5 D, 2.5 DTi, 2.8 DTI, 3.0 DTI** 01/99 - 59 -107 kW	**36-216192**		with standard chassis
B4	**1.9 DTI, 2.2 DTI, 2.5 CDTI, 2.5 D, 2.5 DTi, 2.8 DTI, 3.0 DTI** 01/99 - 59 -107 kW	**19-132792** OIO	**19-131689** OIO	VA: rim: 15"

OPEL MOVANO Flatbed / Chassis (U9, E9)

B3	**2.2 DTI, 2.5 CDTI, 2.5 D, 2.5 DTi, 2.8 DTI, 3.0 DTI** 07/98 - 59 -107 kW	**36-216192**		with standard chassis
B4	**2.2 DTI, 2.5 CDTI, 2.5 D, 2.5 DTi, 2.8 DTI, 3.0 DTI** 07/98 - 59 -107 kW	**19-132792** OIO	**19-131702** OIO	VA: rim: 15"

OPEL

OPEL MOVANO Flatbed / Chassis (U9, E9)

OPEL MOVANO Dumptruck (H9)

B3	**2.2 DTI, 2.5 CDTI, 2.5 D, 2.5 DTi, 2.8 DTI, 3.0 DTI** 01/99 - 59 -107 kW	**36-216192**		with standard chassis
B4	**2.2 DTI, 2.5 CDTI, 2.5 D, 2.5 DTi, 2.8 DTI, 3.0 DTI** 01/99 - 59 -107 kW	**19-132792** OIO	**19-131689** OIO	VA: rim: 15"

OPEL VIVARO Combi (J7)

B1	**1.9 DI, 1.9 DTI, 2.0 16V, 2.0 CDTI, 2.0 ECOTEC, 2.5 CDTI, 2.5 DTI** 08/01 - 60 -107 kW	**12-224210**		VA: with ball bearing
B3	**1.9 DI, 1.9 DTI, 2.0 16V, 2.0 CDTI, 2.0 ECOTEC, 2.5 CDTI, 2.5 DTI** 08/01 - 60 -107 kW	**36-199488**	**36-198078**	with standard chassis
B4	**1.9 DI, 1.9 DTI, 2.0 16V, 2.0 CDTI, 2.0 ECOTEC, 2.5 CDTI, 2.5 DTI** 08/01 - 60 -107 kW		**19-152615** OIO	

OPEL VIVARO Box (F7)

B1	**1.9 DI, 1.9 DTI, 2.0 16V, 2.0 CDTI, 2.0 ECOTEC, 2.5 CDTI, 2.5 DTI** 08/01 - 60 -107 kW	**12-224210**		VA: with ball bearing
B3	**1.9 DI, 1.9 DTI, 2.0 16V, 2.0 CDTI, 2.0 ECOTEC, 2.5 CDTI, 2.5 DTI** 08/01 - 60 -107 kW	**36-199488**	**36-198078**	with standard chassis
B4	**1.9 DI, 1.9 DTI, 2.0 16V, 2.0 CDTI, 2.0 ECOTEC, 2.5 CDTI, 2.5 DTI** 08/01 - 60 -107 kW		**19-152615** OIO	

OPEL VIVARO Flatbed / Chassis (E7)

B3	**1.9 Di, 1.9 DTI, 2.0 16V, 2.0 CDTI, 2.0 ECOTEC, 2.5 CDTI, 2.5 DTi** 01/06 - 60 -107 kW	**36-199488**	**36-198078**	with standard chassis
B4	**1.9 Di, 1.9 DTI, 2.0 16V, 2.0 CDTI, 2.0 ECOTEC, 2.5 CDTI** 01/06 - 60 -107 kW		**19-152615** OIO	

PEUGEOT

PEUGEOT 106 I (1A, 1C)

B1	**1.0, 1.1, 1.3, 1.4, 1.4 D, 1.5 D, 1.6** 08/91 - CH-Nr. 33 -76 kW	**12-116614**		-> CH.Nr.: 50265608 VA: with ball bearing
B1	**1.0, 1.1, 1.3, 1.4, 1.4 D, 1.5 D, 1.6** CH-Nr. - 04/96 33 -76 kW	**12-116621**		CH.Nr.: 50265609 -> VA: with ball bearing
B3	**1.0** 09/91 - 04/96 33 -37 kW	**36-202171**		with standard chassis
B3	**1.0** 09/91 - 04/96 33 -37 kW	**36-212514**		with standard chassis; Heavy Duty Version .
B3	**1.1, 1.4** 08/91 - 04/96 44 -69 kW	**36-154654**		with standard chassis
B3	**1.6** 06/93 - 04/96 65 kW	**36-202164**		with standard chassis; without AC; automatic transmission

PEUGEOT				
PEUGEOT 106 I (1A, 1C)				
B3	**1.4 D** 09/92 - 04/96 37 kW	**36-202188**		with standard chassis
B3	**1.4 D** 09/92 - 04/96 37 kW	**36-212514**		with standard chassis; Heavy Duty Version .
B3	**1.5 D, 1.6** 01/94 - 04/96 40 -76 kW	**36-154661**		with standard chassis
B4	**1.0, 1.1, 1.3, 1.4, 1.4 D, 1.5 D, 1.6** 08/91 - 04/96 33 -76 kW	**21-030475** **11-101376** *SP*	**19-019765** OIO	
B6 Sport	**1.0, 1.1, 1.3, 1.4, 1.4 D, 1.5 D, 1.6** 08/91 - 04/96 33 -76 kW	**34-030608**	**24-020756** OIO	
B6 Sport	**1.0, 1.1, 1.3, 1.4, 1.4 D, 1.5 D, 1.6** 08/91 - 04/96 33 -76 kW	**34-030608**	**24-012768** OIO	HA: firmer setting
B8	**1.0, 1.1, 1.3, 1.4, 1.4 D, 1.5 D, 1.6** 08/91 - 04/96 33 -76 kW	**34-030592**	**24-020756** OIO	
B8	**1.0, 1.1, 1.3, 1.4, 1.4 D, 1.5 D, 1.6** 08/91 - 04/96 33 -76 kW	**34-030592**	**24-012768** OIO	HA: firmer setting
B12 PK	**1.0, 1.4, 1.4 D, 1.5 D** 08/91 - 04/96 33 -69 kW	**46-192899**		Conditions see certificates VA: lowering (expertise): 30-40 mm; axle load to: 650 kg HA: lowering (expertise): 30 mm; axle load to: 640 kg
B12 PK	**1.1, 1.3, 1.4, 1.6** 08/91 - 04/96 44 -76 kW	**46-192882**		Conditions see certificates VA: lowering (expertise): 25-35 mm; axle load to: 640 kg HA: lowering (expertise): 30 mm; axle load to: 620 kg
B12 SL	**1.0, 1.1, 1.3, 1.4, 1.4 D, 1.5 D, 1.6** 08/91 - 04/96 33 -76 kW	**46-192875**		Conditions see certificates VA: lowering (expertise): 45-50 mm; axle load to: 785 kg HA: lowering (expertise): 30 mm
MS	**1.0, 1.1, 1.3, 1.4, 1.4 D, 1.5 D, 1.6** 08/91 - 04/96 33 -76 kW	**34-003510**	**24-012768** OIO	mark: Rallye Gruppe N HA: firmer setting
PEUGEOT 106 II (1)				
B1	**1.0 i, 1.1 i, 1.4 i, 1.5 D, 1.6 i, 1.6 S16** 05/96 - 33 -87 kW	**12-116621**		VA: with ball bearing
B3	**1.0 i, 1.1, 1.1 i, 1.4 i** 05/96 - 33 -55 kW	**36-154654**		with standard chassis
B3	**1.0 i, 1.1 i, 1.4 i** 05/96 - 33 -55 kW	**36-202201**		with standard chassis; Heavy Duty Version .
B3	**1.5 D, 1.6 i, 1.6 S16** 05/96 - 40 -87 kW	**36-154661**		with standard chassis
B4	**1.0 i, 1.1 i** 05/96 - 33 -44 kW	**21-030475** **11-101376** *SP*	**19-019765** OIO	with standard chassis; without ABS; without power steering; without AC
B4	**1.0 i, 1.1 i** 05/96 - 33 -44 kW	**21-030475** **11-101376** *SP*	**19-068121** OIO	with standard chassis; with ABS; with power steering; with AC
B4	**1.4 i, 1.5 D, 1.6 i** 05/96 - 40 -74 kW	**21-030475** **11-101376** *SP*	**19-068121** OIO	with standard chassis
B4	**1.6 S16** 05/96 - 87 kW		**19-068121** OIO	with standard chassis
B6 Sport	**1.0 i, 1.1 i, 1.4 i, 1.5 D, 1.6 i, 1.6 S16** 05/96 - 33 -87 kW	**34-030608**	**24-020756** OIO	

P

PEUGEOT				
PEUGEOT 106 II (1)				
B6 Sport	**1.0 i, 1.1 i, 1.4 i, 1.5 D, 1.6 i, 1.6 S16** 05/96 - 37 -87 kW	**34-030608**	**24-012768** OIO	HA: firmer setting
B8	**1.0 i, 1.1 i, 1.4 i, 1.5 D, 1.6 i, 1.6 S16** 05/96 - 33 -87 kW	**34-030592**	**24-020756** OIO	
B8	**1.0 i** 05/96 - 33 kW	**34-030592**	**24-012768** OIO	HA: firmer setting
B8	**1.0 i, 1.1 i, 1.4 i, 1.5 D, 1.6 i, 1.6 S16** 05/96 - 37 -87 kW	**34-030592**	**24-012768** OIO	HA: firmer setting
B12 PK	**1.0 i, 1.1, 1.1 i, 1.4 i, 1.5 D, 1.6 i, 1.6 S16** 05/96 - 33 -87 kW	**46-192899**		Conditions see certificates VA: lowering (expertise): 20 mm HA: lowering (expertise): 20 mm; axle load to: 640 kg
B12 SL	**1.0 i, 1.1, 1.1 i, 1.4 i, 1.5 D, 1.6 i, 1.6 S16** 05/96 - 33 -87 kW	**46-192875**		Conditions see certificates VA: lowering (expertise): 45-50 mm; axle load to: 785 kg HA: lowering (expertise): 30 mm
MS	**1.0 i, 1.1 i, 1.4 i, 1.5 D, 1.6 i, 1.6 S16** 05/96 - 37 -87 kW	**34-003510**	**24-012768** OIO	mark: Rallye Gruppe N HA: firmer setting
PEUGEOT 107				
B3	**1.0** 06/05 - 50 kW	**36-200764**	**36-200795**	with standard chassis
B3	**1.0** 06/05 - 50 kW	**36-200788**	**36-200795**	with standard chassis; Heavy Duty Version .
B3	**1.4 HDi** 06/05 - 40 kW	**36-200788**	**36-200795**	with standard chassis
B4	**1.0, 1.4 HDi** 06/05 - 40 -50 kW	**22-146809** **22-146816**	**19-147659** OIO	
PEUGEOT 205 I (741A/C)				
B2	**1.0, 1.1, 1.3, 1.4, 1.5, 1.6, 1.7 Diesel** 02/83 - 10/87 33 -63 kW	**17-053310** **11-101376** SP	**15-069153** OIO	
B3	**1.0, 1.1, 1.3, 1.4, 1.5, 1.6** 02/83 - 10/87 33 -63 kW	**36-163410**		with standard chassis; mark: GL
B3	**1.0, 1.1, 1.3, 1.4, 1.5, 1.6** 02/83 - 10/87 33 -63 kW			with standard chassis; mark: GT
B3	**1.6 GTI, 1.9 GTI** 12/84 - 10/87 75 -94 kW	**36-163380**		with standard chassis
B3	**1.7 Diesel** 08/83 - 10/87 44 kW	**36-163403**		with standard chassis
B4	**1.0, 1.1, 1.3, 1.4, 1.5, 1.6, 1.7 Diesel** 02/83 - 10/87 33 -63 kW	**22-040916** **11-101376** SP	**19-019314** OIO	
B4	**1.6 GTI, 1.9 GTI** 12/84 - 10/87 75 -94 kW	**22-041043** **22-041050** **11-101376** SP	**19-019314** OIO	
B6 Sport	**1.0, 1.1, 1.3, 1.4, 1.5, 1.6, 1.6 GTI, 1.7 Diesel, 1.9 GTI** 02/83 - 10/87 33 -94 kW	**35-005469** **35-005452**	**24-010399** OIO	HA: charakteristic: 368/70

P

PEUGEOT				
PEUGEOT 205 I (741A/C)				
MS	**1.0, 1.1, 1.3, 1.4, 1.5, 1.6, 1.6 GTI, 1.7 Diesel, 1.8 Rally, 1.9 GTI** 02/83 - 10/87 33 -147 kW	*35-005483* *35-005476*	**24-010382**	HA: charakteristic: 345/207
PEUGEOT 205 I Convertible (741B, 20D)				
B2	**1.1, 1.1 CJ, 1.4, 1.4 CJ, 1.4 CJ CAT, 1.4 CT, 1.6, 1.6 CJ, 1.6 CTI, 1.9, 1.9 CTi** 05/86 - 12/94 40 -92 kW	**17-053310** **11-101376** SP	**15-069153**	
B4	**1.1, 1.1 CJ, 1.4, 1.4 CJ, 1.4 CJ CAT, 1.4 CT, 1.6, 1.6 CJ, 1.6 CTI, 1.9, 1.9 CTi** 05/86 - 12/94 40 -92 kW	**22-040916** **11-101376** SP	**19-019314**	
B6 Sport	**1.1, 1.1 CJ, 1.4, 1.4 CJ, 1.4 CJ CAT, 1.4 CT, 1.6, 1.6 CJ, 1.6 CTI, 1.9, 1.9 CTi** 05/86 - 12/94 40 -92 kW	**35-005469** **35-005452**	**24-010399**	HA: charakteristic: 368/70
PEUGEOT 205 II (20A/C)				
B2	**1.0, 1.1, 1.2, 1.3, 1.4, 1.4 CAT, 1.6, 1.6 Aut., 1.7 Diesel, 1.7 TD, 1.8 XDT, 1.9, 1.9 Diesel** 08/87 - 09/98 33 -96 kW	**17-053310** **11-101376** SP		
B3	**1.0, 1.1, 1.2, 1.3, 1.4, 1.4 CAT, 1.6, 1.6 Aut., 1.9** 08/87 - 09/98 33 -96 kW	**36-163410**		with standard chassis; mark: GL
B3	**1.0, 1.1, 1.2, 1.3, 1.4, 1.4 CAT, 1.6, 1.6 Aut., 1.9** 08/87 - 09/98 33 -96 kW			with standard chassis; mark: GT
B3	**1.6 GTI, 1.9 GTI, 1.9 GTI CAT** 10/87 - 07/94 75 -94 kW	**36-163380**		with standard chassis
B3	**1.7 Diesel, 1.7 TD, 1.8 XDT, 1.9 Diesel** 07/87 - 09/98 44 -58 kW	**36-163403**		with standard chassis
B4	**1.0, 1.1, 1.2, 1.3, 1.4, 1.4 CAT, 1.6, 1.6 Aut., 1.7 Diesel, 1.7 TD, 1.8 XDT, 1.9, 1.9 Diesel** 08/87 - 09/98 33 -96 kW	**22-040916** **11-101376** SP	**19-068138**	
B4	**1.6 GTI, 1.9 GTI, 1.9 GTI CAT** 10/87 - 07/94 75 -94 kW	**22-041043** **22-041050** **11-101376** SP	**19-019314**	
B6 Sport	**1.0, 1.1, 1.2, 1.3, 1.3 Rallye, 1.4, 1.4 CAT, 1.6, 1.6 Aut., 1.6 GTI, 1.7 Diesel, 1.7 TD, 1.8 XDT, 1.9, 1.9 Diesel, 1.9 GTI, 1.9 GTI CAT** 08/87 - 09/98 33 -96 kW	**35-005469** **35-005452**	**24-010399**	HA: charakteristic: 368/70
MS	**1.0, 1.1, 1.1 XA, 1.2, 1.3, 1.3 Rallye, 1.4, 1.4 CAT, 1.6, 1.6 Aut., 1.6 GTI, 1.6 GTX, 1.7 Diesel, 1.7 TD, 1.8 XDT, 1.9, 1.9 Diesel, 1.9 GTI, 1.9 GTI CAT** 08/87 - 09/98 33 -96 kW		**24-010382**	HA: charakteristic: 345/207
PEUGEOT 206 Hatchback (2A/C)				
B1	**1.0, 1.1, 1.1 i, 1.4 16V, 1.4 HDi eco 70, 1.4 i, 1.4 LPG, 1.6 16V, 1.6 HDi FAP 110, 1.6 i, 1.9 D, 2.0 HDI 90, 2.0 RC, 2.0 S16** 10/00 - 40 -130 kW	**12-117819** **12-117802**		VA: with ball bearing

P

PEUGEOT

PEUGEOT 206 Hatchback (2A/C)

B3	**1.1, 1.1 i, 1.4 16V, 1.4 i, 1.4 LPG** 08/98 - 09/07 40 -65 kW	**36-154654**		with standard chassis
B3	**1.4 HDi eco 70, 1.6 16V, 1.6 i, 1.9 D** 09/98 - 50 -80 kW	**36-154661**		with standard chassis
B3	**1.6 HDi FAP 110** 05/04 - 80 kW	**36-215522**		with standard chassis; with AC
B3	**2.0 HDI 90, 2.0 RC, 2.0 S16** 04/99 - 66 -130 kW	**36-154678**		with standard chassis
B4	**1.0, 1.1, 1.1 i** 09/98 - 40 -48 kW	*22-052940*	*19-068848* OIO	equipment: XR, XR Presence VA: For vehicles without stabilizer
B4	**1.0, 1.1, 1.1 i** 09/98 - 40 -48 kW	**22-052964** **22-052957**	**19-068855** OIO	equipment: XA, Enterprise VA: for vehicles with stabilizer
B4	**1.0, 1.1, 1.1 i, 1.4 16V, 1.4 HDi eco 70, 1.4 i, 1.4 LPG, 1.6 16V, 1.6 HDi FAP 110, 1.6 i, 1.9 D, 2.0 HDI 90, 2.0 S16** 10/00 - 40 -100 kW	**22-108968** **22-108951**	**19-108971** OIO	with off-road suspension VA: for vehicles with stabilizer
B4	**1.4 16V, 1.4 i, 1.4 LPG, 1.9 D, 2.0 HDI 90** 12/99 - 51 -66 kW	**22-052964** **22-052957**	**19-068862** OIO	VA: for vehicles with stabilizer
B4	**1.6 i** 09/98 - 12/00 65 kW	**22-052964** **22-052957**	**19-068855** OIO	
B4	**2.0 S16** 04/99 - 99 -100 kW	**22-052971** **22-052988**	**19-068879** OIO	
B6 Sport	**1.0, 1.1, 1.1 i, 1.4 16V, 1.4 HDi eco 70, 1.4 i, 1.4 LPG, 1.6 16V, 1.6 HDi FAP 110, 1.6 i, 1.9 D, 2.0 HDI 90, 2.0 RC, 2.0 S16** 10/00 - 40 -130 kW	**35-046462** **35-046479**	**24-028929** OIO	
B8	**1.0, 1.1, 1.1 i, 1.4 16V, 1.4 HDi eco 70, 1.4 i, 1.4 LPG, 1.6 16V, 1.6 HDi FAP 110, 1.6 i, 1.9 D, 2.0 HDI 90, 2.0 RC, 2.0 S16** 10/00 - 40 -130 kW	**35-050162** **35-050179**	**24-065191** OIO	
B12 PK	**1.1, 1.1 i, 1.4 16V, 1.4 i, 1.4 LPG** 08/98 - 09/07 40 -65 kW	**46-182203**		without ride height adjustment; Conditions see certificates VA: lowering (expertise): 30 mm HA: lowering (expertise): 30 mm; axle load to: 730 kg
B12 PK	**1.6 16V, 1.6 i** 09/98 - 65 -80 kW	**46-182210**		without ride height adjustment; Conditions see certificates VA: lowering (expertise): 30 mm HA: lowering (expertise): 30 mm
B12 PK	**2.0 RC** 07/03 - 130 kW	**46-182241**		without ride height adjustment; Conditions see certificates VA: lowering (expertise): 20-25 mm; axle load to: 850 kg HA: axle load to: 730 kg
B12 PK	**1.4 HDi eco 70, 2.0 S16** 10/00 - 50 -100 kW	**46-182227**		without ride height adjustment; Conditions see certificates VA: lowering (expertise): 25 mm HA: lowering (expertise): 25 mm
B12 PK	**1.6 HDi FAP 110, 1.9 D, 2.0 HDI 90** 12/99 - 51 -80 kW	**46-182234**		without ride height adjustment; Conditions see certificates VA: lowering (expertise): 30 mm HA: lowering (expertise): 30 mm; axle load to: 730 kg
B12 SL	**1.1, 1.1 i, 1.4 16V, 1.4 HDi eco 70, 1.4 i, 1.4 LPG, 1.6 16V, 1.6 i, 1.9 D, 2.0 HDI 90, 2.0 RC, 2.0 S16** 08/98 - 40 -130 kW	**46-182258**		without ride height adjustment; Conditions see certificates VA: lowering (expertise): 45-50 mm; axle load to: 890 kg HA: lowering (expertise): 30 mm
B14	**1.0, 1.1, 1.1 i, 1.4 16V, 1.4 HDi eco 70, 1.4 i, 1.4 LPG, 1.6 16V, 1.6 HDi FAP 110, 1.6 i, 1.9 D, 2.0 HDI 90, 2.0 RC, 2.0 S16** 10/00 - 40 -130 kW	**47-087569**		Conditions see certificates VA: lowering (expertise): 35-45 mm; axle load to: 890 kg HA: lowering (expertise): 0-25 mm; axle load to: 790 kg

P

PEUGEOT				
PEUGEOT 206 Saloon				
B4	**1.4, 1.6 16V** 03/07 - 55 -80 kW	**22-137197** **22-137203**	**19-108971**	without sport chassis; without off-road suspension
B6 Sport	**1.4, 1.6 16V** 03/07 - 55 -80 kW	**35-046462** **35-046479**	**24-028929**	
B8	**1.4, 1.6 16V** 03/07 - 55 -80 kW	**35-050162** **35-050179**	**24-065191**	
B12 PK	**1.4** 03/07 - 55 kW	**46-182203**		without ride height adjustment; Conditions see certificates VA: lowering (expertise): 30 mm HA: lowering (expertise): 30 mm; axle load to: 730 kg
B12 PK	**1.6 16V** 03/07 - 80 kW	**46-182210**		without ride height adjustment; Conditions see certificates VA: lowering (expertise): 30 mm HA: lowering (expertise): 30 mm
B14	**1.4, 1.6 16V** 03/07 - 55 -80 kW	**47-087569**		Conditions see certificates VA: lowering (expertise): 35-45 mm; axle load to: 890 kg HA: lowering (expertise): 0-25 mm; axle load to: 790 kg
PEUGEOT 206 SW (2E/K)				
B1	**1.1, 1.4, 1.4 16V, 1.4 HDi, 1.6 16V, 1.6 HDi FAP 110, 2.0 16V, 2.0 HDi** 07/02 - 44 -100 kW	**12-117819** **12-117802**		VA: with ball bearing
B3	**1.1, 1.4** 07/02 - 44 -55 kW	**36-154654**		with standard chassis
B3	**1.4 16V, 1.4 HDi, 1.6 16V** 07/02 - 50 -80 kW	**36-154661**		with standard chassis
B3	**1.6 HDi FAP 110, 2.0 16V, 2.0 HDi** 07/02 - 66 -100 kW	**36-154678**		with standard chassis
B4	**1.1, 1.4, 1.4 16V, 1.4 HDi, 1.6 16V, 2.0 16V, 2.0 HDi** 07/02 - 44 -100 kW	**22-137197** **22-137203**	**19-108971**	without sport chassis; without off-road suspension
B6 Sport	**1.1, 1.4, 1.4 16V, 1.4 HDi, 1.6 16V, 1.6 HDi FAP 110, 2.0 16V, 2.0 HDi** 07/02 - 44 -100 kW	**35-046462** **35-046479**	**24-028929**	
B8	**1.1, 1.4, 1.4 16V, 1.4 HDi, 1.6 16V, 1.6 HDi FAP 110, 2.0 16V, 2.0 HDi** 07/02 - 44 -100 kW	**35-050162** **35-050179**	**24-065191**	
B12 PK	**1.1, 1.4, 1.4 16V** 07/02 - 44 -65 kW	**46-182203**		without ride height adjustment; Conditions see certificates VA: lowering (expertise): 30 mm HA: lowering (expertise): 30 mm; axle load to: 730 kg
B12 PK	**1.6 16V** 07/02 - 80 kW	**46-182210**		without ride height adjustment; Conditions see certificates VA: lowering (expertise): 30 mm HA: lowering (expertise): 30 mm
B12 PK	**1.4 HDi, 2.0 16V** 07/02 - 50 -100 kW	**46-182227**		without ride height adjustment; Conditions see certificates VA: lowering (expertise): 30 mm HA: lowering (expertise): 30 mm
B12 PK	**1.6 HDi FAP 110, 2.0 HDi** 07/02 - 66 -80 kW	**46-182234**		without ride height adjustment; Conditions see certificates VA: lowering (expertise): 30 mm HA: lowering (expertise): 30 mm; axle load to: 730 kg
B12 SL	**1.1, 1.4, 1.4 16V, 1.4 HDi, 1.6 16V, 1.6 HDi FAP 110, 2.0 16V, 2.0 HDi** 07/02 - 44 -100 kW	**46-182258**		without ride height adjustment; Conditions see certificates VA: lowering (expertise): 30 mm; axle load to: 890 kg HA: lowering (expertise): 30 mm
B14	**1.1, 1.4, 1.4 16V, 1.4 HDi, 1.6 16V, 2.0 16V, 2.0 HDi** 07/02 - 44 -100 kW	**47-087569**		Conditions see certificates VA: lowering (expertise): 35-45 mm; axle load to: 890 kg HA: lowering (expertise): 0-25 mm; axle load to: 790 kg

P

PEUGEOT				
PEUGEOT 206 CC (2D)				
B1	**1.6 16V, 1.6 HDi FAP 110, 2.0 S16** 09/00 - 80 -100 kW	**12-117819** **12-117802**		VA: with ball bearing
B3	**1.6 16V** 09/00 - 80 kW	**36-215522**		with standard chassis; without AC
B3	**2.0 S16** 09/00 - 100 kW	**36-215522**		with standard chassis; without AC; manual transmission
B3	**2.0 S16** 09/00 - 100 kW	**36-215539**		with standard chassis; without AC; automatic transmission
B3	**2.0 S16** 09/00 - 100 kW	**36-198245**		with standard chassis; with AC; automatic transmission
B4	**1.6 16V, 1.6 HDi FAP 110, 2.0 S16** 09/00 - 80 -100 kW	**22-052964** **22-052957**	**19-068862**	VA: for vehicles with stabilizer
B6 Sport	**1.6 16V, 1.6 HDi FAP 110, 2.0 S16** 09/00 - 80 -100 kW	**35-050162** **35-050179**	**24-065191**	
B12 PK	**1.6 16V, 2.0 S16** 09/00 - 80 -100 kW	**46-182227**		Conditions see certificates VA: lowering (expertise): 30 mm HA: lowering (expertise): 30 mm
B12 SL	**1.6 16V, 2.0 S16** 09/00 - 80 -100 kW	**46-182258**		Conditions see certificates VA: lowering (expertise): 45-50 mm; axle load to: 890 kg HA: lowering (expertise): 30 mm
B14	**1.6 16V, 1.6 HDi FAP 110, 2.0 S16** 09/00 - 80 -100 kW	**47-087569**		Conditions see certificates VA: lowering (expertise): 35-45 mm; axle load to: 890 kg HA: lowering (expertise): 0-25 mm; axle load to: 780 kg
PEUGEOT 206+ (T3E)				
B4	**1.1, 1.4 HDi eco 70, 1.4 i** 01/09 - 44 -55 kW	**22-052964** **22-052957**	**19-068862**	
PEUGEOT 207 (WA_, WC_)				
B1	**1.4, 1.4 16V, 1.4 Bioflex, 1.6 16V, 1.6 16V RC, 1.6 16V Turbo, 1.6 16V VTi, 1.6 Flex** 02/06 - 53 -128 kW	**12-226528**		VA: without ball bearing
B1	**1.4 HDi** 02/06 - 50 kW	**12-226528**		VA: without ball bearing; Engine Code: DV4TD
B1	**1.6 HDi** 02/06 - 66 -80 kW	**12-226528**		VA: without ball bearing; Engine Code: DV6DTED
B1	**1.6 HDi** 08/09 - 82 kW	**12-226528**		VA: without ball bearing; Engine Code: DV6C
B3	**1.4, 1.4 16V, 1.4 Bioflex** 02/06 - 53 -70 kW	**37-172220**	**36-172238**	with standard chassis
B3	**1.4, 1.4 16V, 1.4 Bioflex** 02/06 - 53 -70 kW	**37-172251**	**36-172245**	with standard chassis; Heavy Duty Version .
B3	**1.6 16V RC, 1.6 16V Turbo, 1.6 16V VTi, 1.6 HDi** 02/06 - 66 -128 kW	**37-172268**	**36-172245**	with standard chassis
B3	**1.4 HDi, 1.6 16V, 1.6 Flex** 02/06 - 50 -81 kW	**37-172251**	**36-172238**	with standard chassis
B3	**1.4 HDi, 1.6 16V, 1.6 Flex** 02/06 - 50 -81 kW	**37-172268**	**36-172245**	with standard chassis; Heavy Duty Version .

P

PEUGEOT

PEUGEOT 207 (WA_, WC_)

B4	**1.4, 1.4 16V, 1.4 Bioflex** 02/06 - 53 -70 kW	**22-184160** ↰ **22-184177** ↱	**19-158969** OIO	VA: Øa: 47 mm
B4	**1.4, 1.4 16V, 1.4 Bioflex, 1.4 HDi, 1.6 16V, 1.6 16V Turbo, 1.6 Flex, 1.6 HDi** 02/06 - 50 -115 kW	**22-183828** ↰ **22-183835** ↱	**19-158969** OIO	with standard chassis VA: Øa: 51 mm
B4	**1.4 HDi, 1.6 16V, 1.6 16V Turbo, 1.6 Flex, 1.6 HDi** 02/06 - 50 -115 kW	**22-184160** ↰ **22-184177** ↱	**19-158976** OIO	with standard chassis VA: Øa: 47 mm
B6 Sport	**1.4, 1.4 16V, 1.4 Bioflex, 1.4 HDi, 1.6 16V, 1.6 16V RC, 1.6 16V Turbo, 1.6 16V VTi, 1.6 Flex, 1.6 HDi** 02/06 - 50 -128 kW	**35-138266** ↰ **35-138273** ↱	**24-138284** OIO	with standard chassis VA: Øa: 47 mm
B6 Sport	**1.4, 1.4 16V, 1.4 Bioflex, 1.4 HDi, 1.6 16V, 1.6 16V RC, 1.6 16V Turbo, 1.6 16V VTi, 1.6 Flex, 1.6 HDi** 02/06 - 50 -128 kW	**35-138297** ↰ **35-138303** ↱	**24-138284** OIO	with standard chassis VA: Øa: 51 mm
B8	**1.4, 1.4 16V, 1.4 Bioflex, 1.4 HDi, 1.6 16V, 1.6 16V RC, 1.6 16V Turbo, 1.6 16V VTi, 1.6 Flex, 1.6 HDi** 02/06 - 50 -128 kW	**35-138310** ↰ **35-138327** ↱	**24-138338** OIO	with sports suspension VA: Øa: 47 mm
B8	**1.4, 1.4 16V, 1.4 Bioflex, 1.4 HDi, 1.6 16V, 1.6 16V RC, 1.6 16V Turbo, 1.6 16V VTi, 1.6 Flex, 1.6 HDi** 02/06 - 50 -128 kW	**35-138341** ↰ **35-138358** ↱	**24-138338** OIO	with sports suspension VA: Øa: 51 mm
B12 PK	**1.4, 1.4 16V, 1.4 Bioflex, 1.6 16V, 1.6 16V Turbo, 1.6 Flex** 02/06 - 53 -115 kW	**46-194275**		outside diameter strut 47 mm; Conditions see certificates VA: lowering (expertise): 30 mm; axle load to: 1000 kg HA: lowering (expertise): 30 mm; axle load to: 900 kg
B12 PK	**1.4, 1.4 16V, 1.4 Bioflex, 1.6 16V, 1.6 16V Turbo, 1.6 Flex** 02/06 - 53 -115 kW	**46-194282**		outside diameter strut 51 mm; Conditions see certificates VA: lowering (expertise): 30 mm; axle load to: 1000 kg HA: lowering (expertise): 30 mm; axle load to: 900 kg
B12 PK	**1.4 HDi, 1.6 HDi** 02/06 - 50 -82 kW	**46-194299**		outside diameter strut 47 mm; Conditions see certificates VA: lowering (expertise): 30 mm; axle load to: 1050 kg HA: lowering (expertise): 30 mm; axle load to: 900 kg
B12 PK	**1.4 HDi, 1.6 HDi** 02/06 - 50 -82 kW	**46-194305**		outside diameter strut 51 mm; Conditions see certificates VA: lowering (expertise): 30 mm; axle load to: 1050 kg HA: lowering (expertise): 30 mm; axle load to: 900 kg

PEUGEOT 207 CC (WD_)

B1	**1.6 16V, 1.6 16V Turbo, 1.6 HDi** 02/07 - 80 -115 kW	**12-226528**		VA: without ball bearing
B1	**1.6 HDi** 08/09 - 82 kW	**12-226528**		VA: without ball bearing; Engine Code: DV6C
B3	**1.6 16V, 1.6 16V Turbo, 1.6 HDi** 02/07 - 80 -115 kW	**37-172268**	**36-172276**	with standard chassis
B4	**1.6 16V, 1.6 16V Turbo, 1.6 HDi** 02/07 - 80 -115 kW	**22-184160** ↰ **22-184177** ↱	**19-158976** OIO	with standard chassis VA: Øa: 47 mm
B4	**1.6 16V, 1.6 16V Turbo, 1.6 HDi** 02/07 - 80 -115 kW	**22-183828** ↰ **22-183835** ↱	**19-158976** OIO	with standard chassis VA: Øa: 51 mm
B6 Sport	**1.6 16V, 1.6 16V Turbo, 1.6 HDi** 02/07 - 80 -115 kW	**35-138297** ↰ **35-138303** ↱	**24-138284** OIO	VA: Øa: 51 mm
B8	**1.6 16V, 1.6 16V Turbo, 1.6 HDi** 02/07 - 80 -115 kW	**35-138341** ↰ **35-138358** ↱	**24-138338** OIO	VA: Øa: 51 mm
B12 PK	**1.6 16V, 1.6 16V Turbo, 1.6 HDi** 02/07 - 80 -115 kW	**46-194305**		outside diameter strut 51 mm; Conditions see certificates VA: lowering (expertise): 30 mm; axle load to: 1050 kg HA: lowering (expertise): 30 mm; axle load to: 900 kg

P

PEUGEOT

PEUGEOT 207 CC (WD_)

PEUGEOT 207 SW (WK_)

B1	**1.4, 1.4 16V, 1.6 16V, 1.6 16V RC, 1.6 HDi** 02/07 - 54 -128 kW	**12-226528**		VA: without ball bearing
B1	**1.6 HDi** 11/09 - 68 kW	**12-226528**		VA: without ball bearing; Engine Code: DV6DTED
B1	**1.6 HDi** 08/09 - 82 kW	**12-226528**		VA: without ball bearing; Engine Code: DV6C
B3	**1.4, 1.4 16V** 06/07 - 54 -70 kW	**37-172251**	**36-172238**	with standard chassis
B3	**1.4, 1.4 16V** 06/07 - 54 -70 kW	**37-172251**	**36-172245**	with standard chassis; Heavy Duty Version .
B3	**1.6 16V, 1.6 HDi** 06/07 - 66 -88 kW	**37-172251**	**36-172245**	with standard chassis
B4	**1.4, 1.4 16V, 1.6 16V, 1.6 HDi** 06/07 - 54 -88 kW	**22-183828** ↰ **22-183835** ↱	**19-158976** OIO	with standard chassis VA: Øa: 51 mm

PEUGEOT 304 (_04M_)

B3	**1.3, 1.3 GL, 1.3 GT, 1.4 D** 10/69 - 10/79 33 -55 kW	**36-202751**		with standard chassis

PEUGEOT 305 I (581A)

B3	**1.3, 1.5, 1.5 Diesel** 11/77 - 09/82 36 -65 kW	*36-202737*		with standard chassis

PEUGEOT 305 II (581M)

B3	**1.1, 1.3, 1.5, 1.6, 1.8, 1.8 D, 1.9, 1.9 Diesel** 10/82 - 07/90 43 -75 kW	*36-202737*		with standard chassis

PEUGEOT 306 Hatchback (7A, 7C, N3, N5)

B1	**1.1, 1.4, 1.6, 1.8, 1.8 16V, 1.8 D, 1.9 D, 1.9 DT, 2.0 16V, 2.0 HDI 90, 2.0 S16, 2.0 XSi** 05/93 - 05/01 43 -120 kW	**12-117000**		VA: with ball bearing
B2	**1.4, 1.6, 1.8, 1.8 D, 1.9 D, 1.9 DT, 2.0 HDI 90** 05/93 - 05/01 43 -74 kW		**15-069153** OIO	with standard chassis
B3	**1.1, 1.4, 1.6, 1.8, 1.8 16V** 05/93 - 05/01 44 -81 kW	**36-154685**		with standard chassis
B4	**1.1** 05/93 - 02/97 44 kW	**22-040657** ↰ **22-040664** ↱ **11-101376** SP	**19-068138** OIO	with standard chassis
B4	**1.4, 1.6, 1.8, 1.9 D, 1.9 DT** 05/93 - 02/97 47 -74 kW	**22-040657** ↰ **22-040664** ↱ **11-101376** SP	**19-019314** OIO	with standard chassis
B4	**1.4, 1.6, 1.8, 1.8 16V, 1.8 D, 1.9 D, 1.9 DT, 2.0 HDI 90** 03/97 - 05/01 43 -81 kW	**22-045676** ↰ **22-045669** ↱ **11-101376** SP	**19-019314** OIO	with standard chassis
B4	**2.0 16V, 2.0 S16, 2.0 XSi** 05/93 - 05/01 89 -120 kW	**22-045959** ↰ **22-045966** ↱	**19-019314** OIO	

P

PEUGEOT

PEUGEOT 306 Hatchback (7A, 7C, N3, N5)

B6 Sport	**1.1, 1.4, 1.6, 1.8, 1.8 16V, 1.8 D, 1.9 D, 1.9 DT, 2.0 16V, 2.0 HDI 90, 2.0 S16, 2.0 XSi** 05/93 - 05/01 43 -120 kW	**35-041313** **35-041320**	**24-020749**	without sport chassis
B8	**1.1, 1.4, 1.6, 1.8, 1.8 16V, 1.8 D, 1.9 D, 1.9 DT, 2.0 16V, 2.0 HDI 90, 2.0 S16, 2.0 XSi** 05/93 - 05/01 43 -120 kW	**35-041337** **35-041344**	**24-020749**	without sport chassis
B12 PK	**1.1, 1.4, 1.6** 05/93 - 05/01 44 -72 kW	**46-194312**		Conditions see certificates VA: lowering (expertise): 30 mm HA: lowering (expertise): 30 mm; axle load to: 820 kg
B12 PK	**1.8, 1.8 16V, 1.8 D, 1.9 D, 1.9 DT, 2.0 16V, 2.0 HDI 90, 2.0 S16, 2.0 XSi** 05/93 - 05/01 43 -120 kW	**46-194329**		Conditions see certificates VA: lowering (expertise): 30 mm HA: lowering (expertise): 30 mm; axle load to: 820 kg

PEUGEOT 306 (7B, N3, N5)

B1	**1.1, 1.4, 1.4 SL, 1.6, 1.6 SR, 1.8, 1.8 16V, 1.8 D, 1.8 ST, 1.9 D, 1.9 SLD, 1.9 SRDT, 1.9 STD, 2.0, 2.0 HDI 90, 2.0 S16, 2.0 ST** 02/94 - 05/01 44 -110 kW	**12-117000**		VA: with ball bearing
B2	**1.1, 1.4, 1.4 SL, 1.6, 1.6 SR, 1.8, 1.8 D, 1.8 ST, 1.9 D, 1.9 SLD, 1.9 SRDT, 1.9 STD, 2.0 HDI 90** 02/94 - 05/01 44 -74 kW		**15-069153**	
B3	**1.1, 1.4, 1.4 SL, 1.6, 1.6 SR, 1.8, 1.8 16V** 04/93 - 05/01 44 -81 kW	**36-154685**		with standard chassis
B4	**1.1, 1.4, 1.4 SL, 1.6, 1.6 SR, 1.8, 1.8 16V, 1.8 D, 1.8 ST, 1.9 D, 1.9 SLD, 1.9 SRDT, 1.9 STD, 2.0, 2.0 HDI 90, 2.0 S16, 2.0 ST** 02/94 - 05/01 44 -112 kW	**22-040657** **22-040664** **11-101376** SP	**19-068138**	with standard chassis
B4	**1.1, 1.4, 1.4 SL, 1.6, 1.6 SR, 1.8, 1.8 16V, 1.8 D, 1.8 ST, 1.9 D, 1.9 SLD, 1.9 SRDT, 1.9 STD, 2.0, 2.0 HDI 90, 2.0 S16, 2.0 ST** 02/94 - 05/01 44 -112 kW	**22-045959** **22-045966**	**19-109299**	with off-road suspension
B6 Sport	**1.1, 1.4, 1.4 SL, 1.6, 1.6 SR, 1.8, 1.8 16V, 1.8 D, 1.8 ST, 1.9 D, 1.9 SLD, 1.9 SRDT, 1.9 STD, 2.0, 2.0 HDI 90, 2.0 S16, 2.0 ST** 02/94 - 05/01 44 -112 kW	**35-041313** **35-041320**	**24-020749**	without sport chassis
B8	**1.1, 1.4, 1.4 SL, 1.6, 1.6 SR, 1.8, 1.8 16V, 1.8 D, 1.8 ST, 1.9 D, 1.9 SLD, 1.9 SRDT, 1.9 STD, 2.0, 2.0 HDI 90, 2.0 S16, 2.0 ST** 02/94 - 05/01 44 -112 kW	**35-041337** **35-041344**	**24-020749**	without sport chassis
B12 PK	**1.1, 1.4, 1.4 SL, 1.6, 1.6 SR** 04/93 - 05/01 44 -72 kW	**46-194312**		Conditions see certificates VA: lowering (expertise): 30 mm HA: lowering (expertise): 30 mm; axle load to: 820 kg
B12 PK	**1.8, 1.8 16V, 1.8 D, 1.8 ST, 1.9 D, 1.9 SLD, 1.9 SRDT, 1.9 STD, 2.0, 2.0 HDI 90, 2.0 S16, 2.0 ST** 07/94 - 05/01 44 -112 kW	**46-194329**		Conditions see certificates VA: lowering (expertise): 30 mm HA: lowering (expertise): 30 mm; axle load to: 820 kg

PEUGEOT 306 Break (7E, N3, N5)

B1	**1.4, 1.6, 1.8 16V, 1.8 XA, 1.9 D, 1.9 TD, 2.0, 2.0 HDI 90** 02/97 - 04/02 44 -97 kW	**12-117000**		VA: with ball bearing

P

PEUGEOT				
PEUGEOT 306 Break (7E, N3, N5)				
B2	**1.4** 03/97 - 04/02 55 kW		**15-069153** OIO	
B3	**1.4, 1.6, 1.8, 1.8 16V** 03/97 - 04/02 55 -81 kW	**36-154685**		with standard chassis
B4	**1.4** 03/97 - 04/02 55 kW	**22-040657** **22-040664** **11-101376** SP	**19-068138** OIO	
B4	**1.6, 1.8, 1.8 16V, 1.8 XA, 1.9 D, 1.9 TD, 2.0, 2.0 HDI 90** 02/97 - 04/02 44 -97 kW	**22-040657** **22-040664** **11-101376** SP	**19-068138** OIO	with standard chassis
B4	**1.6, 1.8, 1.8 16V, 1.8 XA, 1.9 D, 1.9 TD, 2.0, 2.0 HDI 90** 02/97 - 04/02 44 -97 kW	**22-045959** **22-045966**	**19-109299** OIO	with off-road suspension
B6 Sport	**1.4, 1.6, 1.8, 1.8 16V, 1.8 XA, 1.9 D, 1.9 TD, 2.0, 2.0 HDI 90** 02/97 - 04/02 44 -97 kW	**35-041313** **35-041320**	**24-020749** OIO	without sport chassis
B8	**1.4, 1.6, 1.8, 1.8 16V, 1.8 XA, 1.9 D, 1.9 TD, 2.0, 2.0 HDI 90** 02/97 - 04/02 44 -97 kW	**35-041337** **35-041344**	**24-020749** OIO	without sport chassis
B12 PK	**1.4, 1.6** 03/97 - 04/02 55 -72 kW	**46-194312**		Conditions see certificates VA: lowering (expertise): 30 mm HA: lowering (expertise): 30 mm; axle load to: 820 kg
B12 PK	**1.8, 1.8 16V, 1.8 XA, 1.9 D, 1.9 TD, 2.0, 2.0 HDI 90** 02/97 - 04/02 44 -97 kW	**46-194329**		Conditions see certificates VA: lowering (expertise): 30 mm HA: lowering (expertise): 30 mm; axle load to: 820 kg
PEUGEOT 306 Convertible (7D, N3, N5)				
B1	**1.6, 1.8, 1.8 16V, 2.0, 2.0 16V** 03/94 - 04/02 65 -97 kW	**12-117000**		VA: with ball bearing
B3	**1.6, 1.8, 1.8 16V** 03/94 - 04/02 65 -81 kW	**36-154685**		with standard chassis
B4	**1.6, 1.8, 1.8 16V, 2.0, 2.0 16V** 03/94 - 04/02 65 -97 kW	**22-040657** **22-040664** **11-101376** SP	**19-068138** OIO	
B6 Sport	**1.6, 1.8, 1.8 16V, 2.0, 2.0 16V** 03/94 - 04/02 65 -97 kW	**35-041313** **35-041320**	**24-020749** OIO	without sport chassis
B8	**1.6, 1.8, 1.8 16V, 2.0, 2.0 16V** 03/94 - 04/02 65 -97 kW	**35-041337** **35-041344**	**24-020749** OIO	without sport chassis
B12 PK	**1.6, 1.8, 1.8 16V, 2.0, 2.0 16V** 03/94 - 04/02 65 -97 kW	**46-194329**		Conditions see certificates VA: lowering (expertise): 30 mm HA: lowering (expertise): 30 mm; axle load to: 820 kg
PEUGEOT 307 (3A/C)				
B1	**1.4, 1.4 16V, 1.4 HDi, 1.6, 1.6 BioFlex, 1.6 HDi, 1.6 HDi 110, 2.0, 2.0 16V, 2.0 HDi 110 FAP, 2.0 HDi 135, 2.0 HDi 90** 08/00 - 50 -130 kW	**12-117932**	**12-224333**	VA: with ball bearing HA: without ball bearing
B3	**1.4, 1.4 16V, 1.6** 08/00 - 55 -80 kW	**37-171933**	**36-171910**	with standard chassis; From Contr.No. 09821
B3	**1.4, 1.4 16V, 1.6** 08/00 - 55 -80 kW	**37-171940**	**36-171927**	with standard chassis; Heavy Duty Version .

P

PEUGEOT				
PEUGEOT 307 (3A/C)				
B3	**1.4 HDi, 1.6 HDi, 1.6 HDi 110, 2.0, 2.0 16V, 2.0 HDi 110 FAP, 2.0 HDi 135, 2.0 HDi 90** 08/00 - 50 -130 kW	**37-171940**	**36-171910**	with standard chassis
B3	**1.4 HDi, 1.6 HDi, 1.6 HDi 110, 2.0, 2.0 16V, 2.0 HDi 110 FAP, 2.0 HDi 135, 2.0 HDi 90** 08/00 - 50 -130 kW	**37-171940**	**36-171927**	with standard chassis; Heavy Duty Version .
B4	**1.4, 1.4 16V, 1.4 HDi, 1.6, 1.6 BioFlex, 1.6 HDi, 1.6 HDi 110, 2.0, 2.0 16V, 2.0 HDi 110 FAP, 2.0 HDi 135, 2.0 HDi 90** 08/00 - 50 -130 kW	**22-113115**	**19-113128**	with standard chassis
B6 Sport	**1.4, 1.4 16V, 1.4 HDi, 1.6, 1.6 BioFlex, 1.6 HDi, 1.6 HDi 110, 2.0, 2.0 16V, 2.0 HDi 110 FAP, 2.0 HDi 135, 2.0 HDi 90** 08/00 - 50 -130 kW	**35-052746**	**24-068604**	
B8	**1.4, 1.4 16V, 1.4 HDi, 1.6, 1.6 BioFlex, 1.6 HDi, 1.6 HDi 110, 2.0, 2.0 16V, 2.0 HDi 110 FAP, 2.0 HDi 135, 2.0 HDi 90** 08/00 - 50 -130 kW	**35-052753**	**24-068611**	
B12 PK	**1.4, 1.4 16V, 1.6, 1.6 BioFlex, 2.0, 2.0 16V** 08/00 - 55 -130 kW	**46-190635**		Conditions see certificates VA: lowering (expertise): 30 mm; axle load to: 1050 kg HA: lowering (expertise): 30 mm; axle load to: 900 kg
B12 PK	**1.4 HDi, 1.6 HDi, 2.0 HDi 110 FAP, 2.0 HDi 135, 2.0 HDi 90** 08/00 - 50 -100 kW	**46-190642**		Conditions see certificates VA: lowering (expertise): 30 mm; axle load to: 1100 kg HA: lowering (expertise): 30 mm; axle load to: 900 kg
B12 SL	**1.4, 1.4 16V, 1.4 HDi, 1.6, 1.6 BioFlex, 1.6 HDi, 1.6 HDi 110, 2.0, 2.0 16V, 2.0 HDi 110 FAP, 2.0 HDi 135, 2.0 HDi 90** 08/00 - 50 -130 kW	**46-190659**		Conditions see certificates VA: lowering (expertise): 40-50 mm; axle load to: 1020 kg HA: lowering (expertise): 30 mm; axle load to: 900 kg
B14	**1.4, 1.4 16V, 1.4 HDi, 1.6, 1.6 BioFlex, 1.6 HDi, 1.6 HDi 110, 2.0, 2.0 16V, 2.0 HDi 110 FAP, 2.0 HDi 135, 2.0 HDi 90** 08/00 - 50 -130 kW	**47-100817**		Conditions see certificates VA: lowering (expertise): 45-55 mm; axle load to: 1065 kg HA: lowering (expertise): 30-50 mm; axle load to: 1065 kg
PEUGEOT 307 Break (3E)				
B1	**1.4, 1.4 16V, 1.4 HDi, 1.6 16V, 1.6 BioFlex, 1.6 HDi, 1.6 HDi 110 FAP, 2.0, 2.0 16V, 2.0 HDI 110, 2.0 HDi 135 FAP, 2.0 HDI 90** 03/02 - 50 -130 kW	**12-117932**	**12-224333**	VA: with ball bearing HA: without ball bearing
B3	**1.4, 1.4 16V, 1.6 16V** 03/02 - 55 -80 kW	**37-171933**	**36-171910**	with standard chassis
B3	**1.4, 1.4 16V, 1.6 16V** 03/02 - 55 -80 kW	**37-171940**	**36-171927**	with standard chassis; Heavy Duty Version .
B3	**1.4 HDi, 1.6 HDi, 1.6 HDi 110 FAP, 2.0, 2.0 16V, 2.0 HDI 110, 2.0 HDi 135 FAP, 2.0 HDI 90** 03/02 - 50 -130 kW	**37-171940**	**36-171910**	with standard chassis
B3	**1.4 HDi, 1.6 HDi, 1.6 HDi 110 FAP, 2.0, 2.0 16V, 2.0 HDI 110, 2.0 HDi 135 FAP, 2.0 HDI 90** 03/02 - 50 -130 kW	**37-171940**	**36-171927**	with standard chassis; Heavy Duty Version .
B4	**1.4, 1.4 16V, 1.4 HDi, 1.6 16V, 1.6 BioFlex, 1.6 HDi, 1.6 HDi 110 FAP, 2.0, 2.0 16V, 2.0 HDI 110, 2.0 HDi 135 FAP, 2.0 HDI 90** 03/02 - 50 -130 kW	**22-113115**	**19-113135**	with standard chassis

P

PEUGEOT

PEUGEOT 307 Break (3E)

B6 Sport	**1.4, 1.4 16V, 1.4 HDi, 1.6 16V, 1.6 BioFlex, 1.6 HDi, 1.6 HDi 110 FAP, 2.0, 2.0 16V, 2.0 HDI 110, 2.0 HDi 135 FAP, 2.0 HDI 90** 03/02 - 50 -130 kW	**35-052746**	**24-068604**	
B8	**1.4, 1.4 16V, 1.4 HDi, 1.6 16V, 1.6 BioFlex, 1.6 HDi, 1.6 HDi 110 FAP, 2.0, 2.0 16V, 2.0 HDI 110, 2.0 HDi 135 FAP, 2.0 HDI 90** 03/02 - 50 -130 kW	**35-052753**	**24-068611**	
B14	**1.4, 1.4 16V, 1.4 HDi, 1.6 16V, 1.6 BioFlex, 1.6 HDi, 1.6 HDi 110 FAP, 2.0, 2.0 16V, 2.0 HDI 110, 2.0 HDi 135 FAP, 2.0 HDI 90** 03/02 - 50 -130 kW	**47-100817**		Conditions see certificates VA: lowering (expertise): 45-55 mm; axle load to: 1065 kg HA: lowering (expertise): 30-50 mm; axle load to: 1065 kg

PEUGEOT 307 SW (3H)

B1	**1.4, 1.4 16V, 1.6 16V, 1.6 BioFlex, 1.6 D, 1.6 HDi 110, 2.0 16V, 2.0 HDI 110, 2.0 HDi 135, 2.0 HDI 90** 03/02 - 55 -103 kW	**12-117932**	**12-224333**	VA: with ball bearing HA: without ball bearing
B3	**1.4, 1.4 16V, 1.6 16V** 03/02 - 55 -80 kW	**37-171933**	**36-171910**	with standard chassis
B3	**1.4, 1.4 16V, 1.6 16V** 03/02 - 55 -80 kW	**37-171940**	**36-171927**	with standard chassis; Heavy Duty Version .
B3	**1.6 D, 1.6 HDi 110, 2.0 16V, 2.0 HDI 110, 2.0 HDi 135, 2.0 HDI 90** 03/02 - 66 -103 kW	**37-171940**	**36-171910**	with standard chassis
B3	**1.6 D, 1.6 HDi 110, 2.0 16V, 2.0 HDI 110, 2.0 HDi 135, 2.0 HDI 90** 03/02 - 66 -103 kW	**37-171940**	**36-171927**	with standard chassis; Heavy Duty Version .
B4	**1.4, 1.4 16V, 1.6 16V, 1.6 BioFlex, 1.6 D, 1.6 HDi 110, 2.0 16V, 2.0 HDI 110, 2.0 HDi 135, 2.0 HDI 90** 03/02 - 55 -103 kW	**22-113115**	**19-113135**	with standard chassis
B6 Sport	**1.4, 1.4 16V, 1.6 16V, 1.6 BioFlex, 1.6 D, 1.6 HDi 110, 2.0 16V, 2.0 HDI 110, 2.0 HDi 135, 2.0 HDI 90** 03/02 - 55 -103 kW	**35-052746**	**24-068604**	
B8	**1.4, 1.4 16V, 1.6 16V, 1.6 BioFlex, 1.6 D, 1.6 HDi 110, 2.0 16V, 2.0 HDI 110, 2.0 HDi 135, 2.0 HDI 90** 03/02 - 55 -103 kW	**35-052753**	**24-069687**	
B14	**1.4, 1.4 16V, 1.6 16V, 1.6 BioFlex, 1.6 D, 1.6 HDi 110, 2.0 16V, 2.0 HDI 110, 2.0 HDi 135, 2.0 HDI 90** 03/02 - 55 -103 kW	**47-100817**		Conditions see certificates VA: lowering (expertise): 45-55 mm; axle load to: 1065 kg HA: lowering (expertise): 30-50 mm; axle load to: 1065 kg

PEUGEOT 307 CC (3B)

B1	**1.6 16V, 2.0 16V, 2.0 HDi 135 FAP** 10/03 - 80 -130 kW	**12-117932**	**12-224333**	VA: with ball bearing HA: without ball bearing
B3	**1.6 16V** 03/05 - 80 kW	**37-171933**	**36-171910**	with standard chassis
B3	**1.6 16V** 03/05 - 80 kW	**37-171940**	**36-171927**	with standard chassis; Heavy Duty Version .

P

PEUGEOT				
PEUGEOT 307 CC (3B)				
B3	**2.0 16V, 2.0 HDi 135 FAP** 10/03 - 100 -130 kW	**37-171940**	**36-171910**	with standard chassis
B3	**2.0 16V, 2.0 HDi 135 FAP** 10/03 - 100 -130 kW	**37-171940**	**36-171927**	with standard chassis; Heavy Duty Version .
B4	**1.6 16V, 2.0 16V, 2.0 HDi 135 FAP** 10/03 - 80 -130 kW	**22-113115**	**19-113135**	
B6 Sport	**1.6 16V, 2.0 16V, 2.0 HDi 135 FAP** 10/03 - 80 -130 kW	**35-052746**	**24-068604**	
B8	**1.6 16V, 2.0 16V, 2.0 HDi 135 FAP** 10/03 - 80 -130 kW	**35-052753**	**24-068611**	
B14	**1.6 16V, 2.0 16V, 2.0 HDi 135 FAP** 10/03 - 80 -130 kW	**47-100817**		Conditions see certificates VA: lowering (expertise): 45-55 mm; axle load to: 1065 kg HA: lowering (expertise): 30-50 mm; axle load to: 1065 kg
PEUGEOT 308 (4A_, 4C_)				
B1	**1.4 16V, 1.6 16V, 1.6 BioFlex, 1.6 GTi, 1.6 HDi, 2.0 HDi** 09/07 - 66 -147 kW	**12-226559**		VA: without ball bearing
B1	**1.4 16V** 12/09 - 72 kW	**12-226559**		VA: without ball bearing; Engine Code: EP3C
B4	**1.4 16V, 1.6 16V, 1.6 BioFlex, 1.6 GTi, 1.6 HDi, 2.0 HDi** 09/07 - 66 -147 kW	**22-183699**	**19-170381**	with standard chassis
B6 Sport	**1.4 16V, 1.6 16V, 1.6 BioFlex, 1.6 GTi, 1.6 HDi, 2.0 HDi** 09/07 - 66 -147 kW	**35-165453**	**24-165464**	
B8	**1.4 16V, 1.6 16V, 1.6 BioFlex, 1.6 GTi, 1.6 HDi, 2.0 HDi** 09/07 - 66 -147 kW	**35-165675**	**24-165686**	
B14	**1.4 16V, 1.6 16V, 1.6 BioFlex, 1.6 GTi, 1.6 HDi, 2.0 HDi** 09/07 - 66 -147 kW	**47-100817**		Conditions see certificates VA: lowering (expertise): 40-50 mm; axle load to: 1065 kg HA: lowering (expertise): 35-50 mm; axle load to: 1065 kg
PEUGEOT 308 SW				
B1	**1.4 16V, 1.6 16V, 1.6 HDi, 2.0 HDi** 09/07 - 66 -128 kW	**12-226559**		VA: without ball bearing
B4	**1.4 16V, 1.6 16V, 1.6 HDi, 2.0 HDi** 09/07 - 66 -128 kW	**22-183699**	**19-194172**	with standard chassis
PEUGEOT 308 CC				
B1	**1.6 16V, 1.6 HDi, 1.6 THP, 2.0 D, 2.0 HDi** 04/09 - 82 -147 kW	**12-226559**		VA: without ball bearing
B4	**1.6 16V, 1.6 HDi, 2.0 D, 2.0 HDi** 04/09 - 82 -120 kW	**22-183699**	**19-193472**	
B6 Sport	**1.6 16V, 1.6 HDi, 2.0 D** 04/09 - 82 -110 kW	**35-165453**	**24-165686**	
B8	**1.6 16V, 1.6 HDi, 2.0 D** 04/09 - 82 -110 kW	**35-165675**	**24-165686**	
B14	**1.6 16V, 1.6 HDi, 2.0 D** 04/09 - 82 -110 kW	**47-100817**		Conditions see certificates VA: lowering (expertise): 40-50 mm; axle load to: 1065 kg HA: lowering (expertise): 35-50 mm; axle load to: 1065 kg

P

PEUGEOT

PEUGEOT 308 CC

PEUGEOT 309 I (10C, 10A)

B2	**1.1, 1.3, 1.3 XL, 1.4, 1.5, 1.6, 1.6 CAT, 1.9, 1.9 D** 10/85 - 12/89 40 -83 kW	**17-053310** **11-101376** SP	**15-069153**	
B3	**1.1, 1.3, 1.3 XL, 1.4, 1.5, 1.6, 1.6 CAT, 1.9, 1.9 D** 10/85 - 12/89 40 -83 kW	**36-160785**		with standard chassis
B4	**1.1, 1.3, 1.3 XL, 1.4, 1.5, 1.6, 1.6 CAT, 1.9 D** 10/85 - 12/89 40 -83 kW	**22-040916** **11-101376** SP	**19-019314**	
B4	**1.9, 1.9 GTI** 10/85 - 07/89 72 -94 kW	**22-041043** **22-041050** **11-101376** SP	**19-019314**	
B6 Sport	**1.1, 1.3, 1.3 XL, 1.4, 1.6, 1.6 CAT, 1.9, 1.9 D** 10/85 - 12/89 40 -83 kW		**24-010399**	HA: charakteristic: 368/70
B6 Sport	**1.9 GTI** 10/86 - 07/89 88 -94 kW	**35-005469** **35-005452**	**24-010399**	HA: charakteristic: 368/70
MS	**1.1, 1.3, 1.3 XL, 1.4, 1.5, 1.6, 1.6 CAT, 1.9, 1.9 D, 1.9 GTI** 10/85 - 12/89 40 -94 kW	*35-005483* *35-005476*	**24-010382**	HA: charakteristic: 345/207

PEUGEOT 309 II (3C, 3A)

B2	**1.1, 1.4, 1.6** 07/89 - 12/93 40 -69 kW	**17-053310** **11-101376** SP	**15-069153**	
B3	**1.1, 1.4, 1.6, 1.8 Diesel, 1.8 TD, 1.9, 1.9 Diesel** 07/89 - 12/93 40 -80 kW	**36-160785**		with standard chassis
B4	**1.1, 1.4, 1.6** 07/89 - 12/93 40 -69 kW	**22-040916** **11-101376** SP	**19-019314**	
B4	**1.8 Diesel, 1.8 TD, 1.9, 1.9 Diesel, 1.9 GTI, 1.9 GTI 16V** 07/89 - 12/93 44 -116 kW	**22-041043** **22-041050** **11-101376** SP	**19-019314**	
B6 Sport	**1.1, 1.4, 1.6, 1.8 Diesel, 1.9, 1.9 Diesel** 07/89 - 12/93 40 -80 kW		**24-010399**	HA: charakteristic: 368/70
B6 Sport	**1.9 GTI, 1.9 GTI 16V** 07/89 - 12/93 88 -116 kW	**35-005469** **35-005452**	**24-010399**	HA: charakteristic: 368/70

PEUGEOT 405 I (15B)

B2	**1.4, 1.6, 1.8 Turbo Diesel, 1.9, 1.9 4x4, 1.9 Diesel, 1.9 Injection, 1.9 Sport MI-16** 01/87 - 12/92 47 -116 kW	**11-101376** SP	**15-069160**	
B3	**1.4, 1.6, 1.8 Turbo Diesel, 1.9, 1.9 Diesel, 1.9 Injection** 01/87 - 12/92 47 -93 kW	**36-160778**		with standard chassis
B4	**1.4, 1.6, 1.8 Turbo Diesel, 1.9, 1.9 4x4, 1.9 Diesel, 1.9 Injection, 1.9 Sport MI-16** 01/87 - 12/92 47 -116 kW	**22-045683** **11-101376** SP	**19-029368**	
B6 Sport	**1.6, 1.8 Turbo Diesel, 1.9, 1.9 Diesel, 1.9 Injection, 1.9 Sport MI-16** 01/87 - 12/93 47 -116 kW	**35-005520**	**24-015103**	

P

PEUGEOT				
PEUGEOT 405 I (15B)				
B6 Sport	**1.9 4x4** 07/88 - 12/92 80 kW	**35-005520**		
PEUGEOT 405 I Break (15E)				
B2	**1.4, 1.6, 1.8 GLD, 1.8 TD, 1.9, 1.9 D** 05/88 - 08/92 44 -88 kW	**11-101376** SP	**15-069160** OIO	
B4	**1.4, 1.6, 1.8 GLD, 1.8 TD, 1.9, 1.9 D** 05/88 - 08/92 44 -88 kW	**22-045683** **11-101376** SP	**19-029368** OIO	
B6 Sport	**1.4, 1.6, 1.8 GLD, 1.8 TD, 1.9, 1.9 D** 05/88 - 08/92 44 -88 kW	**35-005520**	**24-015103** OIO	
PEUGEOT 405 II (4B)				
B2	**1.4, 1.6, 1.8, 1.9 D, 1.9 TD, 2.0, 2.0 X4, 2.0 16V** 08/92 - 10/95 47 -110 kW	**11-101376** SP	**15-069160** OIO	
B3	**1.4, 1.6, 1.8, 1.9 D, 1.9 TD, 2.0, 2.0 16V** 08/92 - 10/95 47 -110 kW	**36-160778**		with standard chassis
B4	**1.4, 1.6, 1.8, 1.9 D, 1.9 TD, 2.0, 2.0 X4, 2.0 16V** 08/92 - 10/95 47 -110 kW	**22-045683** **11-101376** SP	**19-029368** OIO	
PEUGEOT 405 II Break (4E)				
B2	**1.4, 1.6, 1.8, 1.9 D, 1.9 TD, 2.0, 2.0 4x4** 08/92 - 10/96 47 -89 kW	**11-101376** SP	**15-069160** OIO	
B4	**1.4, 1.6, 1.8, 1.9 D, 1.9 TD, 2.0, 2.0 4x4** 08/92 - 10/96 47 -89 kW	**22-045683** **11-101376** SP	**19-029368** OIO	
PEUGEOT 406 (8B)				
B1	**1.6, 1.8, 1.8 16V, 1.9 D, 1.9 SL, 1.9 TD, 2.0, 2.0 16V, 2.0 16V HPi, 2.0 HDi 110, 2.0 HDI 90, 2.0 Turbo, 2.1 TD 12V, 2.2, 2.2 HDi, 3.0 24V, 3.0 V6** 11/95 - 05/04 51 -152 kW	**12-117796**		VA: with ball bearing
B3	**1.6, 1.8, 1.8 16V, 1.9 D, 2.0 16V, 2.0 16V HPi, 2.0 HDI 110, 3.0 24V** 11/95 - 05/04 55 -140 kW		**36-218967**	with standard chassis
B3	**1.6, 1.8, 1.8 16V, 1.9 D, 1.9 TD, 2.0 16V, 2.0 16V HPi, 2.0 HDI 110, 2.0 Turbo, 2.1 TD 12V, 2.2, 2.2 HDi, 3.0 24V, 3.0 V6** 11/95 - 05/04 55 -152 kW		**36-211272**	with standard chassis; Heavy Duty Version .
B3	**1.8 16V** 10/00 - 05/04 85 kW	**36-202928**		with standard chassis; Fuel Type: Liquefied Petroleum Gas (LPG)
B3	**1.8** 05/97 - 11/97 66 kW	**36-202928**		with standard chassis; with AC
B3	**1.8 16V** 11/97 - 12/99 81 kW	**36-218943**		with standard chassis; mark: SV/GLX/GTX; with AC
B3	**2.0 Turbo** 11/97 - 12/99 108 kW	**36-218943**		with standard chassis; mark: SRI
B3	**2.0 Turbo** 04/96 - 05/04 108 kW		**36-218974**	with standard chassis

P

PEUGEOT				
PEUGEOT 406 (8B)				
B3	**2.2** 07/00 - 05/04 116 kW	36-218998	36-218974	with standard chassis
B3	**3.0 V6** 03/00 - 05/04 152 kW	36-218981	36-218974	with standard chassis; manual transmission
B3	**3.0 V6** 03/00 - 05/04 152 kW	36-214426	36-218974	with standard chassis; automatic transmission
B3	**1.9 TD** 01/96 - 11/97 66 -68 kW	36-218943	36-218967	with standard chassis; mark: SV/GLX; without AC
B3	**1.9 TD** 01/96 - 12/99 66 -68 kW	36-218950	36-218967	with standard chassis; with AC
B3	**2.0 HDi 110** 06/98 - 05/04 79 -80 kW	36-218943	36-218967	with standard chassis; without AC
B3	**2.0 HDi 110** 06/98 - 05/04 79 -80 kW	36-218950	**36-211272**	with standard chassis; with AC
B3	**2.1 TD 12V** 01/96 - 11/97 80 kW	36-218981	36-218974	with standard chassis; without AC
B3	**2.1 TD 12V** 01/96 - 11/97 80 kW	36-214426	36-218974	with standard chassis; with AC
B3	**2.1 TD 12V** 12/97 - 12/99 80 kW	36-214426	36-218974	with standard chassis; mark: GTX/GLX/SVE
B3	**2.1 TD 12V** 12/97 - 12/99 80 kW	36-218943	36-218974	with standard chassis; mark: SR/ST/LX; without AC
B3	**2.1 TD 12V** 12/97 - 12/99 80 kW	36-218950	36-218974	with standard chassis; mark: SR/ST/LX; with AC
B3	**2.2 HDi** 03/00 - 05/04 98 kW	36-218950	36-218967	with standard chassis
B4	**1.6, 1.8, 1.8 16V, 1.9 SL, 2.0, 2.0 16V, 2.0 16V HPi, 2.0 Turbo, 2.2, 3.0 24V** 11/95 - 05/04 51 -140 kW	**22-046833** **22-046826**	**19-061238**	with standard chassis
B4	**1.9 D, 2.0 HDi 110, 2.0 HDI 90, 2.2 HDi, 3.0 V6** 10/96 - 05/04 55 -152 kW	**22-046833** **22-046826**	**19-061245**	
B4	**1.9 TD, 2.1 TD 12V** CH-Nr. - 05/04 66 -80 kW	**22-046833** **22-046826**	**19-061245**	CH.Nr.: 7665 ->

PEUGEOT 406 Break (8E/F)				
B1	**1.9 D, 1.9 TD, 2.0 16V, 2.0 HDi 110, 2.0 HDI 90, 2.0 Turbo, 2.1 TD 12V, 2.2 HDI, 3.0 24V, 3.0 V6** 10/96 - 10/04 55 -152 kW	**12-117796**		VA: with ball bearing
B3	**1.8 16V** 10/00 - 10/04 85 kW	36-202928		with standard chassis; Fuel Type: Liquefied Petroleum Gas (LPG)
B3	**1.8** 05/97 - 11/97 66 kW	36-202928		with standard chassis; with AC
B3	**1.8, 1.8 16V, 1.9 D, 1.9 TD, 2.0 16V, 2.0 16V HPi, 2.0 HDi 110, 2.0 HDI 90, 2.2 HDI** 10/96 - 10/04 55 -103 kW		**36-211272**	with standard chassis; Heavy Duty Version .
B3	**1.9 TD** 10/96 - 11/97 66 kW	36-218943		with standard chassis; mark: SV/GLX; without AC

P

PEUGEOT				
PEUGEOT 406 Break (8E/F)				
B3	**1.9 TD** 10/96 - 12/99 66 kW	36-218950		with standard chassis; with AC
B3	**2.2 HDI** 03/00 - 10/04 98 kW	36-218950	**36-215331**	with standard chassis
B4	**2.0 Turbo, 2.1 TD 12V, 2.2 HDI, 3.0 24V, 3.0 V6** 10/96 - 10/04 80 -152 kW	**22-046833** **22-046826**	**19-061245**	with standard chassis
B4	**1.9 D, 1.9 TD, 2.0 16V, 2.0 HDi 110, 2.0 HDI 90** 10/96 - 10/04 55 -99 kW	**22-046833** **22-046826**	**19-061245**	with off-road suspension
PEUGEOT 406 Coupe (8C)				
B1	**1.8, 2.0 16V, 2.2, 2.2 HDI FAP, 3.0 V6 24V** 03/97 - 12/04 82 -140 kW	**12-117796**		VA: with ball bearing
B4	**1.8, 2.0 16V, 2.2, 2.2 HDI FAP** 03/97 - 12/04 82 -116 kW	**22-046833** **22-046826**	**19-061238**	
B4	**3.0 V6, 3.0 V6 24V** 03/97 - 12/04 140 -152 kW	**22-046833** **22-046826**	**19-061245**	
PEUGEOT 407 (6D_)				
B3	**1.8, 1.8 16V** 05/04 - 85 -92 kW	36-219681	36-219698	with standard chassis
B3	**2.0, 2.0 16V** 05/04 - 100 -103 kW	36-219704	36-219698	with standard chassis; manual transmission
B3	**2.0, 2.0 16V** 05/04 - 100 -103 kW	36-219704	36-219711	with standard chassis; without sun roof; automatic transmission
B3	**2.2, 2.2 16V** 05/04 - 116 -120 kW		36-219698	with standard chassis
B3	**1.6 HDi 110** 05/04 - 80 kW	36-219681	36-219698	with standard chassis; without sun roof
B3	**2.0 HDi 135** 05/04 - 100 kW		36-219711	with standard chassis
B4	**1.6 HDi 110, 1.8, 1.8 16V, 2.0, 2.0 16V, 2.0 HDi, 2.0 HDi 135, 2.2, 2.2 16V, 2.2 HDi 170, 2.7 HDi** 05/04 - 80 -150 kW	**19-146171**	**19-146188**	without electronic suspension control
B6 Sport	**1.6 HDi 110, 1.8, 1.8 16V, 2.0, 2.0 16V, 2.0 HDi, 2.0 HDi 135, 2.2, 2.2 16V, 2.2 HDi 170, 2.7 HDi, 3.0** 05/04 - 80 -155 kW	**24-122740**	**24-122757**	without electronic suspension control
B8	**1.6 HDi 110, 1.8, 1.8 16V, 2.0, 2.0 16V, 2.0 HDi, 2.0 HDi 135, 2.2, 2.2 16V, 2.2 HDi 170, 2.7 HDi, 3.0** 05/04 - 80 -155 kW	**24-122764**	**24-122771**	without electronic suspension control
PEUGEOT 407 SW (6E_)				
B3	**1.8, 1.8 16V** 05/04 - 85 -92 kW	36-219704	36-219728	with standard chassis
B3	**2.0, 2.0 16V** 05/04 - 100 -103 kW	36-219704	36-219728	with standard chassis; manual transmission
B3	**2.0, 2.0 16V** 05/04 - 100 -103 kW	36-219681	36-219735	with standard chassis; automatic transmission

P

PEUGEOT

PEUGEOT 407 SW (6E_)

B3	**1.6 HDi 110, 2.0 HDi 135, 2.2, 2.2 16V** 05/04 - 80 -120 kW		**36-219735**	with standard chassis
B4	**1.6 HDi 110, 1.8, 1.8 16V, 2.0, 2.0 16V, 2.0 Bioflex, 2.0 HDi, 2.0 HDi 135, 2.2, 2.2 16V, 2.2 HDi, 2.2 HDi 170, 2.7 HDi** 05/04 - 80 -150 kW	**19-146171**	**19-146188**	without electronic suspension control
B6 Sport	**1.6 HDi 110, 1.8, 1.8 16V, 2.0, 2.0 16V, 2.0 Bioflex, 2.0 HDi, 2.0 HDi 135, 2.2, 2.2 16V, 2.2 HDi, 2.2 HDi 170, 2.7 HDi, 3.0** 05/04 - 80 -155 kW	**24-122740**	**24-122757**	without electronic suspension control
B8	**1.6 HDi 110, 1.8, 1.8 16V, 2.0, 2.0 16V, 2.0 Bioflex, 2.0 HDi, 2.0 HDi 135, 2.2, 2.2 16V, 2.2 HDi, 2.2 HDi 170, 2.7 HDi, 3.0** 05/04 - 80 -155 kW	**24-122764**	**24-122771**	without electronic suspension control

PEUGEOT 407 Coupe (6C_)

B4	**2.0 HDi, 2.2 16V, 2.7 HDi** 10/05 - 100 -150 kW	**19-146171**	**19-146188**	without electronic suspension control
B6 Sport	**2.0 HDi, 2.2 16V, 2.7 HDi, 3.0 HDi, 3.0 V6** 10/05 - 100 -177 kW	**24-122740**	**24-122757**	without electronic suspension control
B8	**2.0 HDi, 2.2 16V, 2.7 HDi, 3.0 HDi, 3.0 V6** 10/05 - 120 -177 kW	**24-122764**	**24-122771**	without electronic suspension control

PEUGEOT 504 (A_, M_)

B3	**1.8, 1.8 Injection, 2.0, 2.0 TI** 01/71 - 06/83 55 -78 kW		**36-160952**	with standard chassis
B3	**1.9 D, 2.1 D, D** 02/71 - 07/86 40 -51 kW		**36-160952**	with standard chassis
B4	**1.8, 1.8 Injection, 1.9 D, 2.0, 2.0 TI, 2.1 D, D** CH-Nr. - 12/83 40 -78 kW	**11-101918** *SP*		CH.Nr.: 2 181 357 ->

PEUGEOT 504 Break (D_, F_)

B3	**1.8, 2.0, 2.1 D, 2.3 D** 04/71 - 07/86 48 -68 kW		**36-160945**	with standard chassis
B4	**1.8, 2.0, 2.1 D, 2.3 D** 04/71 - 07/86 48 -68 kW	**11-101918** *SP*		

PEUGEOT 504 Coupe

B3	**2.0, 2.7** 10/74 - 08/84 75 -106 kW		**36-160952**	with standard chassis
B4	**2.0** 10/74 - CH-Nr. 75 -78 kW	**11-101918** *SP*		-> CH.Nr.: 2 181 356
B4	**2.0** CH-Nr. - 08/84 75 -78 kW	**11-101918** *SP*		CH.Nr.: 2 181 357 ->
B4	**2.7** CH-Nr. - 08/84 106 kW	**11-101918** *SP*		CH.Nr.: 2 085 066 ->

P

PEUGEOT				
PEUGEOT 504 Convertible				
B4	**2.0** 10/74 - CH-Nr. 75 -78 kW	**11-101918** SP		-> CH.Nr.: 2 085 065
B4	**2.0** CH-Nr. - 08/84 75 -78 kW	**11-101918** SP		CH.Nr.: 2 085 066 ->
PEUGEOT 504 Pickup (E_)				
B4	**1.6, 1.8, 1.9 D, 2.1 D, 2.3 D** 01/80 - 12/89 40 -55 kW	**11-101918** SP		
PEUGEOT 505 (551A)				
B3	**1.8, 2.0, 2.0 TI,STI, 2.2, 2.8** 05/81 - 08/90 55 -124 kW		**36-160914**	with standard chassis
B3	**2.3 Turbo Diesel, 2.5 Diesel, 2.5 Turbo Diesel** 09/80 - 12/93 51 -77 kW	**36-160839**	**36-160914**	with standard chassis
B4	**1.8, 2.0, 2.0 TI,STI, 2.2, 2.2 GTI, 2.3 Turbo Diesel, 2.5 Diesel, 2.5 Turbo Diesel, 2.8** 09/80 - CH-Nr. 51 -124 kW	**11-101918** SP		-> CH.Nr.: 1 845 000
B4	**1.8, 2.0, 2.0 TI,STI, 2.2, 2.2 GTI, 2.3 Turbo Diesel, 2.5 Diesel, 2.5 Turbo Diesel, 2.8** CH-Nr. - 08/90 51 -124 kW	*11-101420* SP		CH.Nr.: 1 845 001 ->
B4	**2.2 Turbo Injection** 03/84 - CH-Nr. 110 -128 kW	**11-101918** SP		-> CH.Nr.: 1 887 751; without ABS
B4	**2.2 Turbo Injection** CH-Nr. - 12/88 110 -128 kW	*11-101420* SP		CH.Nr.: 1 887 752 ->
B4	**2.2 Turbo Injection** CH-Nr. - 12/88 110 -128 kW	**11-101918** SP		CH.Nr.: 1 965 001 ->; with ABS
PEUGEOT 505 Break (551D)				
B3	**2.3 Diesel, 2.5 Diesel, 2.5 Turbo Diesel** 04/82 - 12/93 51 -77 kW	**36-160839**		with standard chassis
B4	**2.0, 2.2, 2.2 GTI, 2.3 Diesel, 2.5 Diesel, 2.5 Turbo Diesel** 04/82 - CH-Nr. 51 -90 kW	**11-101918** SP		-> CH.Nr.: 1 875 000
B4	**2.0, 2.2, 2.2 GTI, 2.3 Diesel, 2.5 Diesel, 2.5 Turbo Diesel** CH-Nr. - 12/93 51 -90 kW	*11-101420* SP		CH.Nr.: 1 875 001 ->
PEUGEOT 604 (561A_)				
B3	**2.7 SL, 2.7 TI,STI, 2.8 GTI** 08/77 - 07/87 100 -110 kW		**36-160891**	with standard chassis
B3	**2.3 TD, 2.5 TD** 09/79 - 12/86 59 -66 kW	**36-160839**	**36-160891**	with standard chassis
B4	**2.0, 2.3 TD, 2.5 TD, 2.7 SL, 2.7 TI,STI, 2.8 GTI** 08/77 - 07/87 59 -110 kW	**11-101918** SP		
PEUGEOT 605 (6B)				
B4	**2.0, 2.0 16V, 2.0 Turbo, 2.1 D, 2.1 TD 12V, 2.1 Turbo Diesel, 2.5 Turbo Diesel, 3.0, 3.0 SV 24** 08/89 - 07/95 60 -147 kW	**22-040695** **22-040701**	**19-019338**	

P

PEUGEOT

PEUGEOT 605 (6B)

B4	**2.0, 2.0 16V, 2.0 Turbo, 2.1 TD 12V, 2.1 Turbo Diesel, 2.5 Turbo Diesel, 3.0, 3.0 SV 24, 3.0 V6** 07/95 - 09/99 79 -147 kW	**22-110893** **22-110909**	**19-110912** OIO	

PEUGEOT 607 (9D, 9U)

B4	**2.0, 2.0 HDi, 2.2 16V, 2.2 HDI, 2.7 HDi 24V, 3.0 V6 24V** 02/00 - 79 -155 kW	**22-128249** **22-128256**	**19-128269** OIO	with standard chassis

PEUGEOT 806 (221)

B1	**1.8** 07/95 - 08/02 73 kW	**12-117505** **12-117499**		VA: with ball bearing
B4	**1.8, 1.9 TD, 2.0, 2.0 16V, 2.0 HDI, 2.0 Turbo, 2.1 td 12V** 06/94 - CH-Nr. 66 -108 kW	**22-046734**	**19-061054** OIO	-> CH.Nr.: 7608
B4	**1.8, 1.9 TD, 2.0, 2.0 16V, 2.0 HDI, 2.0 Turbo, 2.1 td 12V** CH-Nr. - 08/02 66 -108 kW	**22-046734**	**19-110547** OIO	CH.Nr.: 7609 ->

PEUGEOT 807 (E)

B3	**2.0, 2.2** 06/02 - 100 -116 kW	**36-217533**	**36-217601**	with standard chassis; To Contr.No. 09533
B3	**2.0 16V, 3.0 V6** 06/02 - 103 -150 kW		**36-217601**	with standard chassis
B3	**2.0 HDi** 06/02 - 79 kW	**36-217564**	**36-217601**	with standard chassis
B4	**2.0, 2.0 16V, 2.0 HDi, 2.2, 2.2 HDi, 3.0 V6** 06/02 - 79 -150 kW	**22-128225** **22-139122**	**19-128238** OIO	

PEUGEOT 1007 (KM_)

B1	**1.4, 1.4 16V, 1.4 HDi, 1.6 16V, 1.6 HDi** 04/05 - 50 -80 kW	**12-226542**		VA: without ball bearing
B3	**1.4, 1.4 16V** 04/05 - 54 -65 kW		**36-219667**	with standard chassis
B3	**1.6 16V** 04/05 - 80 kW	**36-219674**	**36-219667**	with standard chassis
B4	**1.4, 1.4 16V, 1.4 HDi, 1.6 16V** 04/05 - 50 -80 kW	**22-118608** **22-118615**	**19-223025** OIO	
B6 Sport	**1.4, 1.4 16V, 1.4 HDi, 1.6 16V, 1.6 HDi** 04/05 - 50 -80 kW	**35-140795** **35-140801**	**24-140812** OIO	with standard chassis

PEUGEOT 4007 (GP_)

B4	**2.2 HDi, 2.4 16V** 02/07 - 115 -125 kW	**i.V.** **i.V.**	**19-172682** OIO	

PEUGEOT BIPPER (AA_)

B1	**1.4** 02/08 - 54 kW	**12-226504** **12-226481**		VA: with ball bearing
B1	**1.3 HDi 75** 10/10 - 55 kW	**12-226504** **12-226481**		Engine Code: F13DTE5 VA: with ball bearing

P

PEUGEOT

PEUGEOT BIPPER (AA_)

B4	**1.4, 1.4 HDi** 02/08 - 50 -54 kW	**22-189271** **22-189288**	**19-189291**	

PEUGEOT BIPPER Tepee

B1	**1.4** 04/08 - 54 kW	**12-226504** **12-226481**		VA: with ball bearing
B1	**1.3 HDi 75** 10/10 - 55 kW	**12-226504** **12-226481**		Engine Code: F13DTE5 VA: with ball bearing
B4	**1.4, 1.4 HDi** 04/08 - 50 -54 kW	**22-189271** **22-189288**	**19-189291**	

PEUGEOT EXPERT (224)

B1	**1.6, 1.8, 1.9 D, 1.9 TD, 2.0, 2.0 HDI, 2.0 HDi Comfort** 10/95 - 51 -100 kW	**12-117505** **12-117499**		VA: with ball bearing
B4	**1.6, 1.8, 1.9 D, 1.9 TD** 10/95 - 08/97 51 -74 kW	**22-046734**	**19-068022**	-> CH.Nr.: 7608
B4	**1.6, 1.8, 1.9 D, 1.9 TD** 09/97 - 10/03 51 -74 kW	**22-046734**	**19-135106**	CH.Nr.: 7609-> 9793
B4	**2.0, 2.0 HDI, 2.0 HDi Comfort** 07/00 - 10/03 69 -100 kW	**22-046734**	**19-135106**	-> CH.Nr.: 9793

PEUGEOT EXPERT Box (222)

B1	**1.6, 1.8, 1.9 D, 1.9 D 70, 1.9 TD, 2.0, 2.0 HDI** 02/96 - 51 -100 kW	**12-117505** **12-117499**		VA: with ball bearing
B4	**1.6, 1.8, 1.9 D, 1.9 TD** 02/96 - 08/97 51 -74 kW	**22-046734**	**19-068022**	-> CH.Nr.: 7608
B4	**1.6, 1.8, 1.9 D, 1.9 D 70, 1.9 TD** 09/97 - 10/03 51 -74 kW	**22-046734**	**19-135106**	CH.Nr.: 7609-> 9793
B4	**2.0, 2.0 HDI** 07/00 - 10/03 69 -100 kW	**22-046734**	**19-135106**	-> CH.Nr.: 9793

PEUGEOT EXPERT Flatbed / Chassis (223)

B1	**1.6, 1.9 D, 1.9 TD, 2.0 HDi** 02/96 - 51 -80 kW	**12-117505** **12-117499**		VA: with ball bearing
B4	**1.6, 1.9 D, 1.9 TD** 02/96 - 08/97 51 -68 kW	**22-046734**	**19-068022**	-> CH.Nr.: 7608
B4	**1.6, 1.9 D, 1.9 TD** 09/97 - 10/03 51 -68 kW	**22-046734**	**19-135106**	CH.Nr.: 7609-> 9793
B4	**1.9 D, 2.0 HDi** 06/98 - 10/03 51 -80 kW	**22-046734**	**19-135106**	-> CH.Nr.: 9793

PEUGEOT EXPERT Tepee (VF3V_)

B4	**1.6 HDi 90, 2.0 16V, 2.0 HDi 120, 2.0 HDi 140** 01/07 - 66 -103 kW		**19-171203**	

P

PEUGEOT				
PEUGEOT EXPERT Box (VF3A_, VF3U_, VF3X_)				
B4	**1.6 HDi 90, 2.0 16V, 2.0 HDi 120, 2.0 HDi 140** 01/07 - 66 -103 kW		**19-171203** OIO	
PEUGEOT EXPERT Flatbed / Chassis				
B4	**1.6 HDi 90, 2.0 HDi 120, 2.0 HDi 140** 01/07 - 66 -100 kW		**19-171203** OIO	
PEUGEOT PARTNER Combispace (5F)				
B1	**1.1, 1.4, 1.6 16V, 1.8, 1.9 D, 2.0 HDI** 05/96 - 44 -80 kW	**12-117925**		with power steering VA: with ball bearing
B3	**2.0 HDI** 02/00 - 12/02 66 kW	**36-200580**		with standard chassis; without AC
B3	**2.0 HDI** 02/00 - 12/02 66 kW	**36-198153**		with standard chassis; with AC
B3	**2.0 HDI** 02/00 - 12/02 66 kW	**36-212545**		with standard chassis; with sun roof; without AC
B3	**2.0 HDI** 02/00 - 12/02 66 kW	**36-212552**		with standard chassis; with sun roof; with AC
B3	**2.0 HDI** 01/03 - 66 kW	**36-198184**		with standard chassis; without AC
B3	**2.0 HDI** 01/03 - 66 kW	**36-215515**		with standard chassis; Heavy Duty Version .; without AC
B3	**2.0 HDI** 01/03 - 66 kW	**36-198368**		with standard chassis; with AC
B4	**1.1, 1.4, 1.6 16V, 1.6 HDi 75, 1.6 HDi 90, 1.8, 1.9 D, 2.0 HDI** 05/96 - 44 -80 kW	**22-045676** **22-045669** **11-101376** SP	**19-061047** OIO	
PEUGEOT PARTNER Box (5)				
B1	**1.1, 1.4, 1.6, 1.8, 1.8 D, 1.9 D, 2.0 HDi** 05/96 - 43 -80 kW	**12-117925**		with power steering VA: with ball bearing
B4	**1.1, 1.4, 1.4 BiFuel, 1.6, 1.6 HDi 75, 1.8** 06/96 - 44 -80 kW	**22-045676** **22-045669** **11-101376** SP	**19-061047** OIO	
B4	**1.1, 1.4, 1.4 BiFuel, 1.6, 1.6 HDi 75, 1.6 HDi 90, 1.8, 1.8 D, 1.9 D, 2.0 HDi** 05/96 - 43 -80 kW	**22-045959** **22-045966** **11-101376** SP	**19-061047** OIO	max. load: 800 kg
B4	**1.8 D, 1.9 D** 05/96 - 43 -51 kW	**22-045676** **22-045669** **11-101376** SP	**19-061047** OIO	max. load: 600 kg
PEUGEOT BOXER Bus (230P)				
B1	**1.9 D, 1.9 TD, 1.9 TD 4x4, 2.0 i, 2.0 i 4x4, 2.5 D, 2.5 D 4x4, 2.5 DT, 2.5 TD, 2.5 TD 4x4, 2.5 TDI, 2.5 TDI 4x4, 2.8 D, 2.8 DTiC, 2.8 HDi, 2.8 HDi All-wheel Drive** 03/94 - 04/02 51 -94 kW	**12-117536** **12-117529**		VA: with ball bearing

P

PEUGEOT				
PEUGEOT BOXER Bus (230P)				
B2	**1.9 D, 1.9 TD, 1.9 TD 4x4, 2.0 i, 2.0 i 4x4, 2.5 D, 2.5 D 4x4, 2.5 DT, 2.5 TD, 2.5 TD 4x4, 2.5 TDI, 2.5 TDI 4x4, 2.8 D, 2.8 DTiC, 2.8 HDi, 2.8 HDi All-wheel Drive** 03/94 - 04/02 51 -94 kW		**15-122582** OIO	
B4	**1.9 D, 1.9 TD, 1.9 TD 4x4, 2.0 i, 2.0 i 4x4, 2.5 D, 2.5 D 4x4, 2.5 DT, 2.5 TD, 2.5 TD 4x4, 2.5 TDI, 2.5 TDI 4x4, 2.8 D, 2.8 DTiC, 2.8 HDi, 2.8 HDi All-wheel Drive** 03/94 - 04/02 51 -94 kW	**22-136244**	**19-065656** OIO	
PEUGEOT BOXER Box (230L)				
B1	**1.9 D, 1.9 DT 4x4, 1.9 TD, 2.0 4x4, 2.0 HDI, 2.0 i, 2.5 D, 2.5 D 4x4, 2.5 DT, 2.5 TD, 2.5 TDI, 2.5 TDI 4x4, 2.8 D, 2.8 DTiC, 2.8 HDi, 2.8 HDi 4x4, 2.8 HDi All-wheel Drive** 10/97 - 04/02 50 -94 kW	**12-117536** **12-117529**		VA: with ball bearing
B2	**1.9 D, 1.9 DT 4x4, 1.9 TD, 2.0 4x4, 2.0 HDI, 2.0 i, 2.5 D, 2.5 D 4x4, 2.5 DT, 2.5 TD, 2.5 TDI, 2.5 TDI 4x4, 2.8 D, 2.8 DTiC, 2.8 HDi, 2.8 HDi 4x4, 2.8 HDi All-wheel Drive** 10/97 - 04/02 50 -94 kW		**15-122582** OIO	To Payload 1400 kg
B4	**1.9 D, 1.9 DT 4x4, 1.9 TD, 2.0 4x4, 2.0 HDI, 2.0 i, 2.5 D, 2.5 D 4x4, 2.5 DT, 2.5 TD, 2.5 TDI, 2.5 TDI 4x4, 2.8 D, 2.8 DTiC, 2.8 HDi, 2.8 HDi 4x4, 2.8 HDi All-wheel Drive** 10/97 - 04/02 50 -94 kW	**22-136244**	**19-065656** OIO	with standard chassis; To Payload 1400 kg
B4	**1.9 D, 1.9 DT 4x4, 1.9 TD, 2.0 4x4, 2.0 HDI, 2.0 i, 2.5 D, 2.5 D 4x4, 2.5 DT, 2.5 TD, 2.5 TDI, 2.5 TDI 4x4, 2.8 D, 2.8 DTiC, 2.8 HDi, 2.8 HDi 4x4, 2.8 HDi All-wheel Drive** 10/97 - 04/02 50 -94 kW	**22-136244**	**24-168731** OIO	with standard chassis; To Payload 1800 kg
B4	**1.9 D, 1.9 DT 4x4, 1.9 TD, 2.0 4x4, 2.0 HDI, 2.0 i, 2.5 D, 2.5 D 4x4, 2.5 DT, 2.5 TD, 2.5 TDI, 2.5 TDI 4x4, 2.8 D, 2.8 DTiC, 2.8 HDi, 2.8 HDi 4x4, 2.8 HDi All-wheel Drive** 10/97 - 04/02 50 -94 kW	**22-136244**	**24-168748** OIO	To Payload 1800 kg; for campers
PEUGEOT BOXER Flatbed / Chassis (ZCT_)				
B1	**1.9 TD, 2.0, 2.0 i, 2.5 D, 2.5 D 4x4, 2.5 TD, 2.5 TDI, 2.5 TDI 4x4, 2.8 D, 2.8 HDi, 2.8 HDi All-wheel Drive** 01/97 - 63 -94 kW	**12-117536** **12-117529**		VA: with ball bearing
B2	**1.9 TD, 2.0, 2.0 i, 2.5 D, 2.5 D 4x4, 2.5 TD, 2.5 TDI, 2.5 TDI 4x4** 01/97 - 63 -81 kW		**15-122582** OIO	To Payload 1400 kg
B4	**1.9 TD, 2.0, 2.0 i, 2.5 D, 2.5 TD, 2.5 TDI, 2.8 D, 2.8 HDi, 2.8 HDi All-wheel Drive** 01/97 - 63 -94 kW	**22-136244**	**19-065656** OIO	with standard chassis; To Payload 1400 kg
B4	**1.9 TD, 2.0, 2.0 i, 2.5 D, 2.5 TD, 2.5 TDI, 2.8 D, 2.8 HDi, 2.8 HDi All-wheel Drive** 01/97 - 63 -94 kW	**22-136244**	**24-168731** OIO	with standard chassis; To Payload 1800 kg

P

PEUGEOT

PEUGEOT BOXER Flatbed / Chassis (ZCT_)

B4	**1.9 TD, 2.0, 2.0 i, 2.5 D, 2.5 TD, 2.5 TDI, 2.8 D, 2.8 HDi, 2.8 HDi All-wheel Drive** 01/97 - 63 -94 kW	**22-136244**	**24-168748**	To Payload 1800 kg; for campers

PEUGEOT BOXER Bus (244, Z_)

B1	**2.0, 2.0 HDi, 2.2 HDi, 2.8 HDi, 2.8 HDi 4x4** 04/02 - 62 -107 kW	**12-117536** **12-117529**		VA: with ball bearing
B4	**2.0, 2.0 HDi, 2.2 HDi, 2.8 HDi, 2.8 HDi 4x4** 04/02 - 62 -107 kW	**22-136244**	**19-065656**	To Payload 1400 kg

PEUGEOT BOXER Box (244)

B1	**2.0, 2.0 HDi, 2.2 HDi, 2.8 HDi, 2.8 HDi 4x4** 04/02 - 62 -107 kW	**12-117536** **12-117529**		VA: with ball bearing
B4	**2.0, 2.0 HDi, 2.2 HDi, 2.8 HDi, 2.8 HDi 4x4** 04/02 - 62 -107 kW	**22-136244**	**19-065656**	To Payload 1400 kg

PEUGEOT BOXER Flatbed / Chassis (244)

B1	**2.0 HDi, 2.2 HDi, 2.8 HDi, 2.8 HDi 4x4, 2.8 TD** 12/01 - 62 -107 kW	**12-117536** **12-117529**		VA: with ball bearing
B4	**2.0 HDi, 2.2 HDi, 2.8 HDi, 2.8 HDi 4x4, 2.8 TD** 12/01 - 62 -107 kW	**22-136244**	**19-065656**	To Payload 1400 kg

PEUGEOT BOXER Box

B4	**2.2 HDi 100, 2.2 HDi 120, 3.0 D, 3.0 HDi, 3.0 HDi 160** 04/06 - 74 -116 kW	**i.V.**	**19-183398**	mark: Light 11-15 Q
B4	**2.2 HDi 100, 2.2 HDi 120, 3.0 D, 3.0 HDi, 3.0 HDi 160** 04/06 - 74 -116 kW	**i.V.**	**19-183398**	mark: Light 17-18 Q

PEUGEOT BOXER Flatbed / Chassis

B4	**2.2 HDi 100, 2.2 HDi 120, 3.0 D, 3.0 HDi, 3.0 HDi 160** 04/06 - 74 -116 kW	**i.V.**	**19-183398**	mark: Light 11-15 Q
B4	**2.2 HDi 100, 2.2 HDi 120, 3.0 D, 3.0 HDi, 3.0 HDi 160** 04/06 - 74 -116 kW	**i.V.**	**19-183398**	mark: Light 17-18 Q

PEUGEOT J5 Bus (280P)

B4	**2.0, 2.5 D** 09/81 - 09/90 54 -58 kW		**19-065625**	

PEUGEOT J5 Box (280L)

B4	**1.8, 1.9 D, 2.0, 2.5 D, 2.5 DT** 09/81 - 08/90 51 -70 kW		**19-065625**	

PEUGEOT J5 Flatbed / Chassis (280L)

B4	**1.8, 1.9 D, 2.0, 2.5 D, 2.5 DT** 09/81 - CH-Nr. 51 -70 kW		**19-065625**	-> CH.Nr.: 0327 500

P

PEUGEOT

PEUGEOT J5 Flatbed / Chassis (280L)

B4	**1.8, 1.9 D, 2.0, 2.5 D, 2.5 DT** CH-Nr. - 09/90 51 -70 kW		**19-065601** OIO	CH.Nr.: 0327 501 ->

PEUGEOT J5 Bus (290P)

B4	**1.9 D, 2.0, 2.5 D, 2.5 TD** 10/90 - 51 -70 kW		**19-065625** OIO	

PEUGEOT J5 Box (290L)

B4	**1.8, 1.9 D, 2.0, 2.5 D, 2.5 DT** 09/90 - 51 -70 kW		**19-065625** OIO	

PEUGEOT J5 Flatbed / Chassis (290L)

B4	**1.8, 1.9 D, 2.0, 2.5 D, 2.5 TD** 09/90 - CH-Nr. 51 -70 kW		**19-065625** OIO	-> CH.Nr.: 0327 500
B4	**1.8, 1.9 D, 2.0, 2.5 D, 2.5 TD** CH-Nr. - 51 -70 kW		**19-065601** OIO	CH.Nr.: 0327 501 ->

PONTIAC

PONTIAC FIREBIRD '81

B6 Sport	**Formula 5.0, TransAm 5.0** 12/81 - 12/89 112 -127 kW	*35-125228*	**24-010214**	
B6 Sport	**Formula 5.0, TransAm 5.0** 12/81 - 12/89 112 -127 kW	*35-125228*	**24-011211**	mark: Heavy Duty

PONTIAC FIREBIRD '89

B6 Sport	**Trans Am 3.2** 10/91 - 01/92 104 kW	*35-125228*	**24-010214**	mark: Sport
B6 Sport	**Trans Am 3.2** 01/93 - 12/93 104 kW	**24-024068**	**24-024075**	mark: Heavy Duty

PONTIAC FIREBIRD Convertible

B6 Sport	**3.4, 3.8, 5.7** 01/93 - 119 -205 kW	**24-024068**	**24-024075**	

PONTIAC TRANS SPORT '89

B6 Sport	**2.3, 3.1, 3.8** 07/89 - 03/97 90 -127 kW	*35-132462*	**24-010191**	

PORSCHE

PORSCHE 356 Coupe

B6 Sport	**1100, 1300, 1300 S, 1500, 1500 S, A 1500 GS Carrera, A 1600, A 1600 GS Carrera, A 1600 Super** 01/50 - 12/59 29 -85 kW	*24-599955* OIO	*24-599962* OIO	
B6 Sport	**B 1600, B 1600 Super 75, B 1600 Super 90, B 2000 GS Carrera 2, C 1600, C 1600 SC, C 2000 GS Carrera 2, C 2000 GS Carrera 2** 01/59 - 03/68 44 -103 kW	*24-599955* OIO	*24-599962* OIO	

PORSCHE

PORSCHE 356 Cabriolet/Speedster

B6 Sport	**1100, 1300, 1300 S, 1500, 1500 S, A 1500 GS Carrera, A 1600, A 1600 GS Carrera, A 1600 S** 01/50 - 12/59 29 -85 kW	*24-599955*	*24-599962*	
B6 Sport	**B 1600, B 1600 Super 75, B 1600 Super 90, B 2000 GS Carrera 2, C 1600, C 1600 SC, C 2000 GS Carrera 2** 01/59 - 12/65 44 -103 kW	*24-599955*	*24-599962*	

PORSCHE 911

B6 Sport	**2.0 L** 01/63 - 11/68 96 -110 kW		**24-001670**	mark: Serie HA: thread: M12
B6 Sport	**2.0 T, 2.2 T** 08/68 - 12/72 81 -92 kW	**34-001127**	**24-001670**	mark: Serie VA: Suspension Strut Manufacturer Boge HA: thread: M12
B6 Sport	**2.0 T, 2.2 T** 08/68 - 12/72 81 -92 kW	**34-001134**	**24-001670**	VA: mark: Serie Turbo; Suspension Strut Manufacturer Boge HA: thread: M12
B6 Sport	**2.3 E, 2.3 S, 2.3 T, 2.7, 2.7 S Carrera, 3.0 SC, 3.0 SC Carrera** 08/71 - 10/83 96 -154 kW	**34-001134**	**24-001694**	mark: Serie Turbo VA: Suspension Strut Manufacturer Boge HA: thread: M14
B6 Sport	**2.3 E, 2.3 S, 2.3 T, 2.7, 2.7 S Carrera, 3.0 SC, 3.0 SC Carrera** 08/71 - 10/83 96 -154 kW	**34-001158**	**24-009751**	mark: Sportlich Straße VA: Suspension Strut Manufacturer Boge HA: thread: M14
B6 Sport	**2.3 E, 2.3 S, 2.3 T, 2.7, 2.7 S Carrera, 3.0 SC, 3.0 SC Carrera** 08/71 - 10/83 96 -154 kW	**34-001165**	**24-009676**	mark: Club-Sport VA: Suspension Strut Manufacturer Boge HA: thread: M14
B6 Sport	**2.7 SC Carrera RS, 3.0 Turbo, 3.2, 3.3 Turbo, 3.3 Turbo S** 08/72 - 11/90 154 -243 kW	**35-001270** **35-001287** **34-050019**	**24-001694**	mark: Serie Bilstein VA: Suspension Strut Manufacturer Bilstein HA: thread: M14
B6 Sport	**2.7 SC Carrera RS, 3.0 Turbo, 3.2, 3.3 Turbo, 3.3 Turbo S** 08/72 - 11/90 154 -243 kW	*35-003885* *35-003892* **34-050507**	**24-009751**	mark: Sportlich Straße VA: Suspension Strut Manufacturer Bilstein HA: thread: M14
B6 Sport	**2.7 SC Carrera RS, 3.0 Turbo, 3.2, 3.3 Turbo, 3.3 Turbo S** 08/72 - 11/90 154 -243 kW	*35-003908* *35-003915* **34-050491**	**24-009676**	mark: Rennen 1 VA: Suspension Strut Manufacturer Bilstein; charakteristic: 2000N/ 1700N HA: thread: M14
B6 Sport	**2.7 SC Carrera RS, 3.0 Turbo, 3.2, 3.3 Turbo, 3.3 Turbo S** 08/72 - 11/90 154 -243 kW	*35-003922* *35-003939* **34-612200**	**24-009737**	mark: Rallye 1000 Seen VA: Suspension Strut Manufacturer Bilstein HA: thread: M14
B6 Sport	**3.2** 08/86 - 08/89 160 kW	**34-001141**	**24-001694**	mark: Serie Turbo VA: Suspension Strut Manufacturer Boge
B6 Sport	**3.2** 08/86 - 08/89 160 kW	**34-001158**	**24-009751**	mark: Sportlich Straße VA: Suspension Strut Manufacturer Boge
B6 Sport	**3.2** 08/86 - 08/89 160 kW	**34-001165**	**24-009676**	mark: Club Sport VA: Suspension Strut Manufacturer Boge
B6 Sport	**3.2 SC Carrera** 02/84 - 03/85 152 kW	**34-001134**	**24-001694**	mark: Serie Turbo; Suspension Strut Manufacturer Boge
B6 Sport	**3.2 SC Carrera** 04/85 - 06/87 152 kW	**34-001141**	**24-001694**	mark: Serie Turbo VA: Suspension Strut Manufacturer Boge
B6 Sport	**3.2 SC Carrera, 3.3 SC Turbo** 04/85 - 08/89 152 -221 kW	**35-001270** **35-001287** **34-050019**	**24-001694**	mark: Serie Bilstein VA: Suspension Strut Manufacturer Bilstein
B6 Sport	**3.2 SC Carrera** 02/84 - 03/85 152 kW	**34-001158**	**24-009751**	mark: Sportlich Straße; Suspension Strut Manufacturer Boge

P

PORSCHE

PORSCHE 911

B6 Sport	**3.2 SC Carrera, 3.3 SC Turbo** 04/85 - 08/89 152 -221 kW	*35-003885* *35-003892* **34-050507**	**24-009751**	mark: Sportlich Straße VA: Suspension Strut Manufacturer Bilstein
B6 Sport	**3.2 SC Carrera** 02/84 - 03/85 152 kW	**34-001165**	**24-009676**	mark: Club Sport VA: Suspension Strut Manufacturer Boge
B6 Sport	**3.2 SC Carrera** 04/85 - 06/87 152 kW	**34-001165**	**24-009676**	mark: Club Sport VA: Suspension Strut Manufacturer Boge
B6 Sport	**3.2 SC Carrera, 3.3 SC Turbo** 04/85 - 08/89 152 -221 kW	*35-003908* *35-003915* **34-188620** **34-050491**	**24-009676**	mark: Rennen 1 VA: Suspension Strut Manufacturer Bilstein; charakteristic: 1600N/ 1600N
B6 Sport	**3.2 SC Carrera, 3.3 SC Turbo** 04/85 - 08/89 152 -221 kW	*35-003922* *35-003939* **34-612200**	**24-009737**	mark: Rallye 1000 Seen VA: Suspension Strut Manufacturer Bilstein
MS	**3.3 Turbo S** 09/86 - 11/90 243 kW	*35-587743* *35-587736*	**24-595452**	mark: Carrera RSR VA: Height Adjustable HA: charakteristic: 180/170; Height Adjustable

PORSCHE 911 Targa

B6 Sport	**2.0 L, 2.0 S** 11/64 - 11/68 96 -118 kW		**24-001670**	mark: Serie HA: thread: M12
B6 Sport	**2.0 E, 2.0 T, 2.2 E, 2.2 S** 06/67 - 02/72 81 -132 kW	**34-001127**	**24-001670**	VA: mark: Serie; Suspension Strut Manufacturer Boge HA: thread: M12
B6 Sport	**2.0 E, 2.2 E, 2.2 S** 09/68 - 02/72 103 -132 kW	**34-001134**	**24-001670**	VA: mark: Serie Turbo; Suspension Strut Manufacturer Boge HA: thread: M12
B6 Sport	**2.0 S** 07/66 - 09/68 125 kW		**24-001670**	mark: Serie
B6 Sport	**2.0 S** 10/68 - 02/72 125 kW	**34-001127**	**24-001670**	mark: Serie HA: thread: M12
B6 Sport	**2.0 S** 10/68 - 02/72 125 kW	**34-001134**	**24-001670**	VA: mark: Serie Turbo HA: thread: M12
B6 Sport	**2.2 T** 01/70 - 12/72 92 kW	**34-001127**	**24-001670**	mark: Serie VA: Suspension Strut Manufacturer Boge HA: thread: M12
B6 Sport	**2.2 T** 01/70 - 12/72 92 kW	**34-001134**	**24-001670**	VA: mark: Serie Turbo; Suspension Strut Manufacturer Boge HA: thread: M12
B6 Sport	**2.3, 2.3 E, 2.3 T, 2.7, 2.7 S, 3.0 SC Carrera** 08/71 - 06/77 96 -147 kW	**34-001134**	**24-001694**	mark: Serie Turbo VA: Suspension Strut Manufacturer Boge
B6 Sport	**2.3, 2.3 E, 2.3 T, 2.7, 2.7 S, 3.0 SC Carrera** 08/71 - 06/77 96 -147 kW	**34-001158**	**24-009751**	mark: Sportlich Straße VA: Suspension Strut Manufacturer Boge
B6 Sport	**2.3, 2.3 E, 2.3 T, 2.7, 2.7 S, 3.0 SC Carrera** 08/71 - 06/77 96 -147 kW	**34-001165**	**24-009676**	mark: Club-Sport VA: Suspension Strut Manufacturer Boge
B6 Sport	**2.7 SC Carrera RS, 3.3 Turbo** 08/72 - 11/90 154 -221 kW	**35-001270** **35-001287** **34-050019**	**24-001694**	mark: Serie
B6 Sport	**2.7 SC Carrera RS, 3.3 Turbo** 08/72 - 11/90 154 -221 kW	*35-003885* *35-003892* **34-050507**	**24-009751**	mark: Sportlich Straße
B6 Sport	**2.7 SC Carrera RS, 3.3 Turbo** 08/72 - 11/90 154 -221 kW	*35-003908* *35-003915* **34-188620** **34-050491**	**24-009676**	mark: Rennen 1 VA: charakteristic: 1600N/ 1600N; charakteristic: 2000N/ 1700N

PORSCHE

PORSCHE 911 Targa

B6 Sport	**2.7 SC Carrera RS, 3.3 Turbo** 08/72 - 11/90 154 -221 kW	*35-003922* *35-003939* **34-612200**	**24-009737**	mark: Rallye 1000 Seen

PORSCHE 911 Convertible

B6 Sport	**3.0 SC, 3.1 Carrera Speedster, 3.1 SC Carrera** 08/82 - 08/84 150 -170 kW	**35-001270** **35-001287** **34-050019**	**24-001694**	mark: Serie Bilstein
B6 Sport	**3.0 SC, 3.1 Carrera Speedster, 3.1 SC Carrera** 08/82 - 08/84 150 -170 kW	**34-001134**	**24-001694**	mark: Serie Turbo VA: Suspension Strut Manufacturer Boge
B6 Sport	**3.0 SC, 3.1 Carrera Speedster** 08/82 - 08/89 150 -170 kW	*35-003885* *35-003892* **34-050507**	**24-009751**	mark: Sportlich Straße
B6 Sport	**3.0 SC, 3.1 Carrera Speedster, 3.1 SC Carrera** 08/82 - 08/84 150 -170 kW	**34-001158**	**24-009751**	mark: Sportlich Straße VA: Suspension Strut Manufacturer Boge
B6 Sport	**3.0 SC, 3.1 Carrera Speedster, 3.1 SC Carrera** 08/82 - 08/84 150 -170 kW	*35-003908* *35-003915* **34-188620** **34-050491**	**24-009676**	mark: Rennen 1 VA: charakteristic: 1600N/ 1600N; charakteristic: 2000N/ 1700N
B6 Sport	**3.0 SC, 3.1 Carrera Speedster, 3.1 SC Carrera** 08/82 - 08/84 150 -170 kW	**34-001165**	**24-009676**	mark: Club-Sport VA: Suspension Strut Manufacturer Boge
B6 Sport	**3.0 SC, 3.1 Carrera Speedster, 3.1 SC Carrera** 08/82 - 08/84 150 -170 kW	*35-003922* *35-003939* **34-612200**	**24-009737**	mark: Rallye 1000 Seen
B6 Sport	**3.1 SC Carrera** 10/84 - 08/89 152 kW	*35-003885* *35-003892* **34-050507**	**24-009751**	mark: Sportlich Straße
B6 Sport	**3.1 Carrera Speedster** 08/86 - 08/89 160 kW	*35-003885* *35-003892* **34-050507**	**24-009751**	mark: Sportlich Straße
B6 Sport	**3.1 SC Carrera** 08/83 - 08/84 170 kW	*35-003885* *35-003892* **34-050507**	**24-009751**	mark: Sportlich Straße

PORSCHE 911 (964)

B6 Sport	**3.3 Turbo, 3.3 Turbo S, 3.6 Turbo** 08/90 - 09/93 235 -265 kW	**35-052777** **35-052784**	**24-015479**	
B6 Sport	**3.6 Carrera, 3.6 Carrera 4** 12/88 - 12/90 184 kW	**35-052777** **35-052784**	**24-017350**	-> CH.Nr.: 96MS4_01467; -> CH.Nr.: 96MS4_10518; mark: Coupe
B6 Sport	**3.6 Carrera, 3.6 Carrera 4** 12/88 - 12/90 184 kW	**35-052777** **35-052784**	**24-017350**	-> CH.Nr.: 96MS4_30299; -> CH.Nr.: 96MS4_40240; mark: Targa
B6 Sport	**3.6 Carrera, 3.6 Carrera 4** 01/91 - 09/93 184 kW	**35-052777** **35-052784**	**24-015479**	CH.Nr.: 96MS4_01468 ->; CH.Nr.: 96MS4_10519 ->; mark: Coupe
B6 Sport	**3.6 Carrera, 3.6 Carrera 4** 01/91 - 09/93 184 kW	**35-052777** **35-052784**	**24-015479**	CH.Nr.: 96MS4_30300 ->; CH.Nr.: 96MS4_40241 ->; mark: Targa
B6 Sport	**3.6 Carrera RS** 06/91 - 09/93 191 kW	*22-181602*		
B16 PSS10	**3.3 Turbo, 3.6 Carrera, 3.6 Carrera 4** 01/91 - 09/93 184 -235 kW	**48-132633**		CH.Nr.: 96MS4_01468 ->; CH.Nr.: 96MS4_10519 ->; mark: Coupe; Conditions see certificates VA: lowering (expertise): 20-40 mm; axle load to: 780 kg HA: lowering (expertise): 20-40 mm; axle load to: 1150 kg
B16 PSS10	**3.3 Turbo S, 3.6 Turbo** 06/91 - 09/93 261 -265 kW	**48-132633**		Conditions see certificates VA: lowering (expertise): 20-40 mm; axle load to: 780 kg HA: lowering (expertise): 20-40 mm; axle load to: 1150 kg

PORSCHE

PORSCHE 911 (964)

B16 PSS10	**3.6 Carrera, 3.6 Carrera 4** 12/88 - 12/90 184 kW	**48-132626**		-> CH.Nr.: 96MS4_01467; -> CH.Nr.: 96MS4_10518; mark: Coupe; Conditions see certificates VA: lowering (expertise): 20-40 mm; axle load to: 780 kg HA: lowering (expertise): 20-40 mm; axle load to: 1150 kg
B16 PSS10	**3.6 Carrera, 3.6 Carrera 4** 12/88 - 12/90 184 kW	**48-132626**		-> CH.Nr.: 96MS4_30299; -> CH.Nr.: 96MS4_40240; mark: Targa; Conditions see certificates VA: lowering (expertise): 20-40 mm; axle load to: 780 kg HA: lowering (expertise): 20-40 mm; axle load to: 1150 kg
B16 PSS10	**3.6 Carrera, 3.6 Carrera 4** 01/91 - 09/93 184 kW	**48-132633**		CH.Nr.: 96MS4_30300 ->; CH.Nr.: 96MS4_40241 ->; mark: Targa; Conditions see certificates VA: lowering (expertise): 20-40 mm; axle load to: 780 kg HA: lowering (expertise): 20-40 mm; axle load to: 1150 kg
B16 PSS10	**3.6 Carrera RS** 06/91 - 09/93 191 kW	**48-137539**		mark: Walter Röhrl; Conditions see certificates VA: lowering (expertise): 20-40 mm HA: lowering (expertise): 20-40 mm

PORSCHE 911 Convertible (964)

B6 Sport	**3.6 Carrera, 3.6 Carrera 4** 05/89 - 12/90 184 kW	**35-052777** **35-052784**	**24-017350**	-> CH.Nr.: 96MS4_60466; -> CH.Nr.: 96MS4_50777; mark: Cabrio
B6 Sport	**3.6 Carrera, 3.6 Carrera 4** 05/89 - 12/90 184 kW	**35-052777** **35-052784**	**24-017350**	-> CH.Nr.: 96MS4_30299; -> CH.Nr.: 96MS4_40240; mark: Targa
B6 Sport	**3.6 Carrera, 3.6 Carrera 4** 01/91 - 05/94 184 kW	**35-052777** **35-052784**	**24-015479**	CH.Nr.: 96MS4_50778 ->; CH.Nr.: 96MS4_60467 ->; mark: Cabrio
B6 Sport	**3.6 Carrera, 3.6 Carrera 4** 01/91 - 05/94 184 kW	**35-052777** **35-052784**	**24-015479**	CH.Nr.: 96MS4_30300 ->; CH.Nr.: 96MS4_40241 ->; mark: Targa
B16 PSS10	**3.6 Carrera, 3.6 Carrera 4** 05/89 - 12/90 184 kW	**48-132626**		-> CH.Nr.: 96MS4_50777; -> CH.Nr.: 96MS4_60466; mark: Cabrio; Conditions see certificates VA: lowering (expertise): 20-40 mm; axle load to: 780 kg HA: lowering (expertise): 20-40 mm; axle load to: 1150 kg
B16 PSS10	**3.6 Carrera, 3.6 Carrera 4** 05/89 - 12/90 184 kW	**48-132626**		-> CH.Nr.: 96MS4_30299; -> CH.Nr.: 96MS4_40240; mark: Targa; Conditions see certificates VA: lowering (expertise): 20-40 mm; axle load to: 780 kg HA: lowering (expertise): 20-40 mm; axle load to: 1150 kg
B16 PSS10	**3.6 Carrera, 3.6 Carrera 4** 01/91 - 05/94 184 kW	**48-132633**		CH.Nr.: 96MS4_50778 ->; CH.Nr.: 96MS4_60467 ->; mark: Cabrio; Conditions see certificates VA: lowering (expertise): 20-40 mm; axle load to: 780 kg HA: lowering (expertise): 20-40 mm; axle load to: 1150 kg
B16 PSS10	**3.6 Carrera, 3.6 Carrera 4** 01/91 - 05/94 184 kW	**48-132633**		CH.Nr.: 96MS4_30300 ->; CH.Nr.: 96MS4_40241 ->; mark: Targa; Conditions see certificates VA: lowering (expertise): 20-40 mm; axle load to: 780 kg HA: lowering (expertise): 20-40 mm; axle load to: 1150 kg

PORSCHE 911 (993)

B6 Sport	**3.6 Carrera, 3.6 Carrera 4, 3.6 Turbo 4, 3.8 Carrera, 3.8 Carrera 4** 10/93 - 09/97 200 -300 kW	**35-046929** **35-046936**	**24-061308**	with standard chassis
B6 Sport	**3.6 Carrera, 3.6 Carrera 4, 3.6 Turbo 4, 3.8 Carrera, 3.8 Carrera 4** 10/93 - 09/97 200 -300 kW	*35-116486* *35-116493*	**24-061308**	Only for United States of America
B8	**3.6 Carrera, 3.6 Carrera 4, 3.6 Turbo 4, 3.8 Carrera, 3.8 Carrera 4** 10/93 - 09/97 200 -300 kW	**35-195276** **35-195283**	**24-195294**	with sports suspension; mark: M030; M033
B12 PK	**3.6 Carrera, 3.6 Carrera 4, 3.8 Carrera, 3.8 Carrera 4** 10/93 - 09/97 200 -210 kW	**46-193605**		mark: M 033, ex. M30 Turbo; Conditions see certificates VA: lowering (expertise): 30 mm; axle load to: 760 kg HA: lowering (expertise): 30 mm; axle load to: 1080 kg
B16 PSS10	**3.6 Carrera, 3.6 Carrera 4, 3.6 Turbo 4, 3.8 Carrera, 3.8 Carrera 4** 10/93 - 09/97 200 -300 kW	**48-132688**		Conditions see certificates VA: lowering (expertise): 15-35 mm; axle load to: 760 kg HA: lowering (expertise): 10-20 mm; axle load to: 1150 kg

PORSCHE 911 Targa (993)

B6 Sport	**3.6 Carrera, 3.7 Carrera** 08/95 - 09/97 210 -221 kW	**35-046929** **35-046936**	**24-061308**	with standard chassis

PORSCHE

PORSCHE 911 Targa (993)

B6 Sport	**3.6 Carrera, 3.7 Carrera** 08/95 - 09/97 210 -221 kW	*35-116486* *35-116493*	**24-061308**	Only for United States of America
B8	**3.6 Carrera, 3.7 Carrera** 08/95 - 09/97 210 -221 kW	**35-195276** **35-195283**	**24-195294**	with sports suspension; mark: M030; M033
B12 PK	**3.6 Carrera, 3.7 Carrera** 08/95 - 09/97 210 -221 kW	**46-193605**		mark: M 033, ex. M30 Turbo; Conditions see certificates VA: lowering (expertise): 30 mm; axle load to: 760 kg HA: lowering (expertise): 30 mm; axle load to: 1080 kg
B16 PSS10	**3.6 Carrera, 3.7 Carrera** 08/95 - 09/97 210 -221 kW	**48-132688**		Conditions see certificates VA: lowering (expertise): 15-35 mm; axle load to: 760 kg HA: lowering (expertise): 10-20 mm; axle load to: 1150 kg

PORSCHE 911 Convertible (993)

B6 Sport	**3.6 Carrera, 3.6 Carrera 4, 3.8 Carrera, 3.8 Carrera 4** 07/94 - 09/97 200 -210 kW	**35-046929** **35-046936**	**24-061308**	with standard chassis
B6 Sport	**3.6 Carrera, 3.6 Carrera 4, 3.8 Carrera, 3.8 Carrera 4** 06/95 - 09/97 200 -210 kW	*35-116486* *35-116493*	**24-061308**	Only for United States of America
B8	**3.6 Carrera, 3.6 Carrera 4, 3.8 Carrera, 3.8 Carrera 4** 07/94 - 09/97 200 -210 kW	**35-195276** **35-195283**	**24-195294**	with sports suspension; mark: M030; M033
B12 PK	**3.6 Carrera, 3.6 Carrera 4, 3.8 Carrera, 3.8 Carrera 4** 07/94 - 09/97 200 -210 kW	**46-193605**		mark: M 033, ex. M30 Turbo; Conditions see certificates VA: lowering (expertise): 30 mm; axle load to: 760 kg HA: lowering (expertise): 30 mm; axle load to: 1080 kg
B16 PSS10	**3.6 Carrera, 3.6 Carrera 4, 3.8 Carrera, 3.8 Carrera 4** 07/94 - 09/97 200 -210 kW	**48-132688**		Conditions see certificates VA: lowering (expertise): 15-35 mm; axle load to: 760 kg HA: lowering (expertise): 10-20 mm; axle load to: 1150 kg

PORSCHE 911 (996)

B4	**3.4 Carrera, 3.6 Carrera, 3.6 Carrera S, 3.6 S** 09/97 - 08/05 221 -331 kW	**22-147448**	**24-147644**	with standard chassis
B4	**3.4 Carrera, 3.6 Carrera, 3.6 Carrera S, 3.6 S** 09/97 - 08/05 221 -331 kW	**22-113337**	**24-113359**	with sports suspension; mark: M 030
B4	**3.4 Carrera 4, 3.6 Carrera 4, 3.6 Carrera 4S, 3.6 Turbo 4, 3.6 Turbo 4S** 09/97 - 08/05 221 -331 kW	**22-113344**	**24-113359**	with sports suspension; mark: M 030 VA: serie production spring seat must be used
B6 Sport	**3.4 Carrera, 3.6 Carrera, 3.6 Carrera S, 3.6 S** 09/97 - 08/05 221 -331 kW	**22-046123**	**24-029933**	without sport chassis
B6 Sport	**3.4 Carrera 4, 3.6 Carrera 4, 3.6 Carrera 4S, 3.6 Turbo 4, 3.6 Turbo 4S** 09/97 - 08/05 221 -331 kW	**22-052568**	**24-068116**	without sport chassis VA: serie production spring seat must be used
B8	**3.4 Carrera, 3.6 Carrera, 3.6 Carrera S, 3.6 S** 09/97 - 08/05 221 -331 kW	**22-046130**	**24-029940**	with sports suspension; mark: M 030
B8	**3.4 Carrera 4, 3.6 Carrera 4, 3.6 Carrera 4S, 3.6 Turbo 4, 3.6 Turbo 4S** 09/97 - 08/05 221 -331 kW	**22-052728**	**24-068598**	with sports suspension; mark: M 030 VA: serie production spring seat must be used
B16 PSS10	**3.4 Carrera, 3.6 Carrera, 3.6 Carrera S, 3.6 S** 09/97 - 08/05 221 -331 kW	**48-135344**		Conditions see certificates VA: lowering (expertise): 15-35 mm; axle load to: 780 kg HA: lowering (expertise): 10-30 mm; axle load to: 1180 kg
B16 PSS10	**3.4 Carrera 4, 3.6 Carrera 4, 3.6 Carrera 4S** 09/97 - 08/05 221 -254 kW	**48-135351**		Conditions see certificates VA: lowering (expertise): 25-35 mm; axle load to: 825 kg HA: lowering (expertise): 15-20 mm; axle load to: 1250 kg

P

PORSCHE

PORSCHE 911 (996)

B16 PSS10	**3.6 Turbo 4, 3.6 Turbo 4S** 06/00 - 08/05 309 -331 kW	**48-135368**		Conditions see certificates VA: lowering (expertise): 25-35 mm; axle load to: 825 kg HA: lowering (expertise): 15-20 mm; axle load to: 1250 kg
B16 CM	**3.6 GT2, 3.6 GT3** 03/99 - 08/05 265 -355 kW	*26-630113*	*26-624648*	mark: Club-Sport; mark: inkl. RS VA: Height Adjustable HA: Mechanically adjustable shock strength; Height Adjustable
MS	**3.6 GT3** 03/99 - 08/05 265 -280 kW	**33-616957**	**32-616965**	mark: VLN, Resevoir VA: Mechanically adjustable shock strength; Height Adjustable HA: Mechanically adjustable shock strength; Height Adjustable
MS	**3.6 GT2, 3.6 GT3** 03/99 - 08/05 265 -355 kW	*34-046012*	*27-029732*	mark: Rennen HA: Height Adjustable
MS	**3.6 GT2, 3.6 GT3** 03/99 - 08/05 265 -355 kW	*34-610848*	*24-025409*	mark: Carrera Cup HA: Height Adjustable
MS	**3.6 GT2, 3.6 GT3** 03/99 - 08/05 265 -355 kW	*32-145519*	*27-124260*	mark: Rennen; Reservoir VA: Mechanically adjustable shock strength; Height Adjustable HA: Mechanically adjustable shock strength; Height Adjustable
MS MDS	**3.6 GT2, 3.6 GT3** 03/99 - 08/05 265 -355 kW	*26-181967*	*26-181974*	mark: Porsche Cup/ VLN VA: Mechanically adjustable shock strength; Height Adjustable HA: Mechanically adjustable shock strength; Height Adjustable

PORSCHE 911 Convertible (996)

B4	**3.4 Carrera, 3.6 Carrera, 3.6 Carrera S, 3.6 S** 02/98 - 08/05 221 -331 kW	**22-147448**	**24-147644**	with standard chassis
B4	**3.4 Carrera, 3.6 Carrera, 3.6 Carrera S, 3.6 S** 02/98 - 08/05 221 -331 kW	**22-113337**	**24-113359**	with sports suspension; mark: M 030
B4	**3.4 Carrera 4, 3.6 Carrera 4, 3.6 Carrera 4S, 3.6 Turbo 4, 3.6 Turbo 4S** 02/98 - 08/05 221 -331 kW	**22-113344**	**24-113359**	with sports suspension; mark: M30 VA: serie production spring seat must be used
B6 Sport	**3.4 Carrera, 3.6 Carrera, 3.6 Carrera S, 3.6 S** 02/98 - 08/05 221 -331 kW	**22-046123**	**24-029933**	without sport chassis
B6 Sport	**3.4 Carrera 4, 3.6 Carrera 4, 3.6 Carrera 4S, 3.6 Turbo 4, 3.6 Turbo 4S** 02/98 - 08/05 221 -331 kW	**22-052568**	**24-068116**	VA: serie production spring seat must be used
B8	**3.4 Carrera, 3.6 Carrera, 3.6 Carrera S, 3.6 S** 02/98 - 08/05 221 -331 kW	**22-046130**	**24-029940**	with sports suspension; mark: M 030
B8	**3.4 Carrera 4, 3.6 Carrera 4, 3.6 Carrera 4S, 3.6 Turbo 4, 3.6 Turbo 4S** 02/98 - 08/05 221 -331 kW	**22-052728**	**24-068598**	VA: serie production spring seat must be used
B16 PSS10	**3.4 Carrera, 3.6 Carrera, 3.6 Carrera S, 3.6 S** 02/98 - 08/05 221 -331 kW	**48-135344**		Conditions see certificates VA: lowering (expertise): 15-35 mm; axle load to: 780 kg HA: lowering (expertise): 10-30 mm; axle load to: 1180 kg
B16 PSS10	**3.4 Carrera 4, 3.6 Carrera 4, 3.6 Carrera 4S** 02/98 - 08/05 221 -254 kW	**48-135351**		Conditions see certificates VA: lowering (expertise): 25-35 mm; axle load to: 825 kg HA: lowering (expertise): 15-20 mm; axle load to: 1250 kg
B16 PSS10	**3.6 Turbo 4, 3.6 Turbo 4S** 10/03 - 08/05 309 -331 kW	**48-135368**		Conditions see certificates VA: lowering (expertise): 25-35 mm; axle load to: 825 kg HA: lowering (expertise): 15-20 mm; axle load to: 1250 kg

PORSCHE 911 Targa (996)

B4	**3.6** 12/01 - 08/05 235 kW	**22-113337**	**24-113359**	with sports suspension; mark: M 030

P

PORSCHE

PORSCHE 911 Targa (996)

B6 Sport	**3.6** 12/01 - 08/05 235 kW	**22-046123**	**24-029933** OE	without sport chassis
B8	**3.6** 12/01 - 08/05 235 kW	**22-046130**	**24-029940** OE	with sports suspension; mark: M 030
B16 PSS10	**3.6** 12/01 - 08/05 235 kW	**48-135344**		Conditions see certificates VA: lowering (expertise): 25-35 mm; axle load to: 780 kg HA: lowering (expertise): 15-20 mm; axle load to: 1180 kg

PORSCHE 911 (997)

B4	**3.6 Carrera, 3.8 Carrera S** 07/04 - 239 -261 kW	**22-147455**	**24-147477** HA	with standard chassis; without electronic suspension control; without PASM
B4	**3.6 Carrera, 3.8 Carrera S** 07/04 - 239 -261 kW	**22-147462**	**24-147484** HA	with sports suspension; without electronic suspension control; without PASM
B4	**3.6 Carrera 4, 3.8 Carrera 4GTS, 3.8 Carrera 4S, 3.8 Carrera S S4** 07/04 - 239 -300 kW	**22-147493** ↰ **22-147509** ↱	**24-147477** HA	with standard chassis; without electronic suspension control; without PASM
B4	**3.6 Carrera 4, 3.8 Carrera 4GTS, 3.8 Carrera 4S, 3.8 Carrera S S4** 07/04 - 239 -300 kW	**22-147516** ↰ **22-147523** ↱	**24-147484** HA	with sports suspension; without electronic suspension control; without PASM
B4 DTC	**3.6 Carrera, 3.8 Carrera S** 07/04 - 239 -261 kW	**22-147530**	**26-147543** HA	with electronic suspension control; with PASM
B4 DTC	**3.6 Carrera 4, 3.8 Carrera 4GTS, 3.8 Carrera 4S, 3.8 Carrera S S4** 07/04 - 239 -300 kW	**22-147561** ↰ **22-147554** ↱	**26-147543** HA	with electronic suspension control; with PASM
B6 Sport	**3.6 Carrera, 3.8 Carrera GTS, 3.8 Carrera S** 07/04 - 239 -300 kW	**35-118213**	**24-118224** HA	with standard chassis; without sport chassis; without PASM
B6 Sport	**3.6 Carrera 4, 3.6 Turbo, 3.8 Carrera 4GTS, 3.8 Carrera 4S, 3.8 Carrera S S4, 3.8 Turbo, 3.8 Turbo S** 07/04 - 239 -390 kW	**35-135937** ↰ **35-135944** ↱	**24-118224** HA	without electronic suspension control
B6 DTC	**3.6 Carrera, 3.8 Carrera GTS, 3.8 Carrera S** 07/04 - 239 -300 kW	**35-118251**	**26-118260** HA	with standard chassis; with PASM
B6 DTC	**3.6 Carrera 4, 3.6 Turbo, 3.8 Carrera 4GTS, 3.8 Carrera 4S, 3.8 Carrera S S4, 3.8 Turbo, 3.8 Turbo S** 07/04 - 239 -390 kW	**35-135869** ↰ **35-135876** ↱	**26-118260** HA	with electronic suspension control
B8	**3.6 Carrera, 3.8 Carrera GTS, 3.8 Carrera S** 07/04 - 239 -300 kW	**35-118237**	**24-118248** HA	with sports suspension; without PASM
B8	**3.6 Carrera 4, 3.6 Turbo, 3.8 Carrera 4GTS, 3.8 Carrera 4S, 3.8 Carrera S S4, 3.8 Turbo, 3.8 Turbo S** 07/04 - 239 -390 kW	**35-135913** ↰ **35-135920** ↱	**24-118248** HA	without electronic suspension control; with sports suspension; without PASM
B8 DTC	**3.6 Carrera, 3.8 Carrera GTS, 3.8 Carrera S** 07/04 - 239 -300 kW	**35-118275**	**26-118284** HA	with sports suspension; with PASM
B8 DTC	**3.6 Carrera 4, 3.6 Turbo, 3.8 Carrera 4GTS, 3.8 Carrera 4S, 3.8 Carrera S S4, 3.8 Turbo, 3.8 Turbo S** 07/04 - 239 -390 kW	**35-135845** ↰ **35-135852** ↱	**26-118284** HA	with electronic suspension control; with sports suspension; with PASM
B14	**3.6 Carrera, 3.8 Carrera GTS, 3.8 Carrera S** 07/04 - 239 -300 kW	*47-114609*		without PASM; Conditions see certificates VA: lowering (expertise): 15-35 mm; axle load to: 775 kg HA: lowering (expertise): 15-35 mm; axle load to: 1180 kg
B16 PSS9	**3.6 Carrera, 3.8 Carrera GTS, 3.8 Carrera S** 07/04 - 239 -300 kW	**48-115575**		without PASM; Conditions see certificates VA: lowering (expertise): 15-35 mm; axle load to: 775 kg HA: lowering (expertise): 15-35 mm; axle load to: 1180 kg

P

BILSTEIN®

PORSCHE

PORSCHE 911 (997)

B16 PSS10	**3.6 Carrera 4, 3.8 Carrera 4GTS, 3.8 Carrera 4S, 3.8 Carrera S S4** 07/04 - 239 -300 kW	**48-135887**		without electronic suspension control; without PASM; Conditions see certificates VA: lowering (expertise): 25-35 mm HA: lowering (expertise): 15-35 mm
B16 PSS10	**3.6 Carrera 4, 3.8 Carrera 4GTS, 3.8 Carrera 4S, 3.8 Carrera S S4** 07/04 - 239 -300 kW	**48-136013**		without electronic suspension control; without PASM; mark: Club Sport; Conditions see certificates VA: lowering (expertise): 15-35 mm HA: lowering (expertise): 15-35 mm
B16 PSS10	**3.6 Turbo, 3.8 Turbo, 3.8 Turbo S** 03/06 - 353 -390 kW	**48-136013**		without electronic suspension control; without PASM; Conditions see certificates VA: lowering (expertise): 15-35 mm HA: lowering (expertise): 15-35 mm
B16 PSS10	**3.6 Turbo, 3.8 Turbo, 3.8 Turbo S** 03/06 - 353 -390 kW	**48-135887**		without electronic suspension control; without PASM; mark: Komfort; Conditions see certificates VA: lowering (expertise): 25-35 mm HA: lowering (expertise): 15-35 mm
B16 PSS10	**3.6 GT 2, 3.6 GT 3, 3.6 GT2 RS, 3.8 GT3, 3.8 GT3 RS, 4.0 GT3 RS** 03/06 - 305 -456 kW	**48-145459**		disconect PASM; with PASM; Conditions see certificates VA: lowering (expertise): 10-30 mm; axle load to: 675 kg HA: lowering (expertise): 10-30 mm; axle load to: 1105 kg
B16 DTC	**3.6 Carrera, 3.8 Carrera GTS, 3.8 Carrera S** 07/04 - 239 -300 kW	**49-115604**		with PASM; Conditions see certificates VA: lowering (expertise): 15-35 mm; axle load to: 775 kg HA: lowering (expertise): 15-35 mm; axle load to: 1180 kg
B16 DTC	**3.6 Carrera 4, 3.8 Carrera 4GTS, 3.8 Carrera 4S, 3.8 Carrera S S4** 07/04 - 239 -300 kW	**49-135817**		with electronic suspension control; with PASM; Conditions see certificates VA: lowering (expertise): 25-35 mm HA: lowering (expertise): 15-35 mm
B16 DTC	**3.6 Carrera 4, 3.8 Carrera 4GTS, 3.8 Carrera 4S, 3.8 Carrera S S4** 07/04 - 239 -300 kW	**49-135985**		with electronic suspension control; with PASM; mark: Club Sport; Conditions see certificates VA: lowering (expertise): 15-35 mm HA: lowering (expertise): 15-35 mm
B16 DTC	**3.6 Turbo, 3.8 Turbo, 3.8 Turbo S** 03/06 - 353 -390 kW	**49-135985**		with electronic suspension control; with PASM; Conditions see certificates VA: lowering (expertise): 15-35 mm HA: lowering (expertise): 15-35 mm
B16 DTC	**3.6 Turbo, 3.8 Turbo, 3.8 Turbo S** 03/06 - 353 -390 kW	**49-135817**		with electronic suspension control; with PASM; mark: Komfort; Conditions see certificates VA: lowering (expertise): 25-35 mm HA: lowering (expertise): 15-35 mm
B16 DTC	**3.6 GT 2, 3.6 GT 3, 3.6 GT2 RS, 3.8 GT3, 3.8 GT3 RS, 4.0 GT3 RS** 03/06 - 305 -456 kW	**49-145489**		with PASM; Conditions see certificates VA: lowering (expertise): 10-30 mm; axle load to: 675 kg HA: lowering (expertise): 10-30 mm; axle load to: 1105 kg
B16 BCS	**3.6 GT 2, 3.6 GT 3, 3.6 GT2 RS, 3.8 GT3, 3.8 GT3 RS, 4.0 GT3 RS** 03/06 - 305 -456 kW	**48-218412**		Conditions see certificates VA: lowering (expertise): 10-30 mm; axle load to: 675 kg HA: lowering (expertise): 10-30 mm; axle load to: 1105 kg
MS	**3.6 GT 2, 3.6 GT 3, 3.6 GT2 RS, 3.8 GT3, 3.8 GT3 RS, 4.0 GT3 RS** 03/06 - 305 -456 kW	*33-124254*	*32-145526*	mark: Rennen, Resevoir VA: Mechanically adjustable shock strength; Height Adjustable HA: Mechanically adjustable shock strength; Height Adjustable
MS MDS	**3.6 GT 2, 3.6 GT 3, 3.6 GT2 RS, 3.8 GT3, 3.8 GT3 RS, 4.0 GT3 RS** 03/06 - 305 -456 kW	*26-181998*	*26-181981*	mark: Porsche Cup/ VLN VA: Mechanically adjustable shock strength; Height Adjustable HA: Mechanically adjustable shock strength; Height Adjustable

PORSCHE 911 Convertible (997)

B4	**3.6 Carrera, 3.8 Carrera S** 04/05 - 239 -280 kW	**22-147455**	**24-147477**	with standard chassis; without electronic suspension control; without PASM
B4	**3.6 Carrera, 3.8 Carrera S** 04/05 - 239 -280 kW	**22-147462**	**24-147484**	with sports suspension; without electronic suspension control; without PASM
B4	**3.6 Carrera 4, 3.8 Carrera 4GTS, 3.8 Carrera 4S, 3.8 Carrera S S4** 04/05 - 239 -300 kW	**22-147493** **22-147509**	**24-147477**	with standard chassis; without PASM
B4	**3.6 Carrera 4, 3.8 Carrera 4GTS, 3.8 Carrera 4S, 3.8 Carrera S S4** 04/05 - 239 -300 kW	**22-147516** **22-147523**	**24-147484**	with sports suspension; without PASM

PORSCHE				
PORSCHE 911 Convertible (997)				
B4 DTC	**3.6 Carrera, 3.8 Carrera S** 04/05 - 239 -280 kW	**22-147530**	**26-147543**	with electronic suspension control; with PASM
B4 DTC	**3.6 Carrera 4, 3.8 Carrera 4GTS, 3.8 Carrera 4S, 3.8 Carrera S S4** 04/05 - 239 -300 kW	**22-147561** **22-147554**	**26-147543**	with electronic suspension control; with PASM
B6 Sport	**3.6 Carrera, 3.8 Carrera GTS, 3.8 Carrera S** 04/05 - 239 -300 kW	**35-118213**	**24-118224**	with standard chassis; without sport chassis; without PASM
B6 Sport	**3.6 Carrera 4, 3.6 Turbo, 3.8 Carrera 4GTS, 3.8 Carrera 4S, 3.8 Carrera S S4, 3.8 Turbo, 3.8 Turbo S** 04/05 - 239 -390 kW	**35-135937** **35-135944**	**24-118224**	without electronic suspension control; with standard chassis; without PASM
B6 DTC	**3.6 Carrera, 3.8 Carrera GTS, 3.8 Carrera S** 04/05 - 239 -300 kW	**35-118251**	**26-118260**	with PASM
B6 DTC	**3.6 Carrera 4, 3.6 Turbo, 3.8 Carrera 4GTS, 3.8 Carrera 4S, 3.8 Carrera S S4, 3.8 Turbo, 3.8 Turbo S** 04/05 - 239 -390 kW	**35-135869** **35-135876**	**26-118260**	with electronic suspension control; with PASM
B8	**3.6 Carrera, 3.8 Carrera GTS, 3.8 Carrera S** 04/05 - 239 -300 kW	**35-118237**	**24-118248**	with sports suspension; without PASM
B8	**3.6 Carrera 4, 3.6 Turbo, 3.8 Carrera 4GTS, 3.8 Carrera 4S, 3.8 Carrera S S4, 3.8 Turbo, 3.8 Turbo S** 04/05 - 239 -390 kW	**35-135913** **35-135920**	**24-118248**	without electronic suspension control; with sports suspension; without PASM
B8 DTC	**3.6 Carrera, 3.8 Carrera GTS, 3.8 Carrera S** 04/05 - 239 -300 kW	**35-118275**	**26-118284**	with sports suspension; with PASM
B8 DTC	**3.6 Carrera 4, 3.6 Turbo, 3.8 Carrera 4GTS, 3.8 Carrera 4S, 3.8 Carrera S S4, 3.8 Turbo, 3.8 Turbo S** 04/05 - 239 -390 kW	**35-135845** **35-135852**	**26-118284**	with electronic suspension control; with sports suspension; with PASM
B14	**3.6 Carrera, 3.8 Carrera GTS, 3.8 Carrera S** 04/05 - 239 -300 kW	*47-114609*		without PASM; Conditions see certificates VA: lowering (expertise): 15-35 mm; axle load to: 775 kg HA: lowering (expertise): 15-35 mm; axle load to: 1220 kg
B16 PSS9	**3.6 Carrera, 3.8 Carrera GTS, 3.8 Carrera S** 04/05 - 239 -300 kW	**48-115575**		without PASM; Conditions see certificates VA: lowering (expertise): 15-35 mm; axle load to: 775 kg HA: lowering (expertise): 15-35 mm; axle load to: 1220 kg
B16 PSS10	**3.6 Carrera 4, 3.6 Turbo, 3.8 Carrera 4GTS, 3.8 Carrera 4S, 3.8 Carrera S S4, 3.8 Turbo, 3.8 Turbo S** 04/05 - 239 -390 kW	**48-135887**		without electronic suspension control; without PASM; Conditions see certificates VA: lowering (expertise): 25-35 mm HA: lowering (expertise): 15-35 mm
B16 PSS10	**3.6 Carrera 4, 3.6 Turbo, 3.8 Carrera 4GTS, 3.8 Carrera 4S, 3.8 Turbo, 3.8 Turbo S** 04/05 - 239 -390 kW	**48-136013**		without electronic suspension control; without PASM; mark: Club Sport; Conditions see certificates VA: lowering (expertise): 15-35 mm HA: lowering (expertise): 15-35 mm
B16 PSS10	**3.8 Carrera 4S, 3.8 Carrera S S4** 04/05 - 261 -280 kW	**48-136013**		without electronic suspension control; without PASM; mark: Club Sport; Conditions see certificates VA: lowering (expertise): 20-30 mm HA: lowering (expertise): 10-30 mm
B16 DTC	**3.6 Carrera, 3.8 Carrera GTS, 3.8 Carrera S** 04/05 - 239 -300 kW	**49-115604**		with PASM; Conditions see certificates VA: lowering (expertise): 15-35 mm; axle load to: 775 kg HA: lowering (expertise): 15-35 mm; axle load to: 1220 kg
B16 DTC	**3.6 Carrera 4, 3.6 Turbo, 3.8 Carrera 4GTS, 3.8 Carrera 4S, 3.8 Carrera S S4, 3.8 Turbo, 3.8 Turbo S** 04/05 - 239 -390 kW	**49-135817**		with electronic suspension control; with PASM VA: lowering (expertise): 25-35 mm HA: lowering (expertise): 15-35 mm
B16 DTC	**3.6 Carrera 4, 3.6 Turbo, 3.8 Carrera 4GTS, 3.8 Carrera 4S, 3.8 Carrera S S4, 3.8 Turbo, 3.8 Turbo S** 04/05 - 239 -390 kW	**49-135985**		with electronic suspension control; with PASM; mark: Club Sport; Conditions see certificates VA: lowering (expertise): 15-35 mm HA: lowering (expertise): 15-35 mm

P

PORSCHE				
PORSCHE 911 Targa (997)				
B4	**3.6 Carrera 4, 3.6 Carrera 4, 3.8 Carrera 4S** 11/06 - 239 -283 kW	**22-147493** **22-147509**	**24-147477**	with standard chassis; without electronic suspension control; without PASM
B4	**3.6 Carrera 4, 3.6 Carrera 4, 3.8 Carrera 4S** 11/06 - 239 -283 kW	**22-147516** **22-147523**	**24-147484**	with sports suspension; without electronic suspension control; without PASM
B4 DTC	**3.6 Carrera 4, 3.6 Carrera 4, 3.8 Carrera 4S** 11/06 - 239 -283 kW	**22-147561** **22-147554**	**26-147543**	with electronic suspension control; with PASM
B6 Sport	**3.6 Carrera 4, 3.6 Carrera 4, 3.8 Carrera 4S** 11/06 - 239 -283 kW	**35-135937** **35-135944**	**24-118224**	without electronic suspension control; with standard chassis; without PASM
B6 DTC	**3.6 Carrera 4, 3.6 Carrera 4, 3.8 Carrera 4S** 11/06 - 239 -283 kW	**35-135869** **35-135876**	**26-118260**	with electronic suspension control; with PASM
B8	**3.6 Carrera 4, 3.6 Carrera 4, 3.8 Carrera 4S** 11/06 - 239 -283 kW	**35-135913** **35-135920**	**24-118248**	without electronic suspension control; with sports suspension; without PASM
B8 DTC	**3.6 Carrera 4, 3.6 Carrera 4, 3.8 Carrera 4S** 11/06 - 239 -283 kW	**35-135845** **35-135852**	**26-118284**	with electronic suspension control; with sports suspension; with PASM
B16 PSS10	**3.6 Carrera 4, 3.6 Carrera 4, 3.8 Carrera 4S** 11/06 - 239 -283 kW	**48-135887**		without electronic suspension control; without PASM; Conditions see certificates VA: lowering (expertise): 25-35 mm HA: lowering (expertise): 15-35 mm
B16 PSS10	**3.6 Carrera 4, 3.6 Carrera 4, 3.8 Carrera 4S** 11/06 - 239 -283 kW	**48-136013**		without electronic suspension control; without PASM; mark: Club Sport; Conditions see certificates VA: lowering (expertise): 15-35 mm HA: lowering (expertise): 15-35 mm
B16 DTC	**3.6 Carrera 4, 3.6 Carrera 4, 3.8 Carrera 4S** 11/06 - 239 -283 kW	**49-135985**		with electronic suspension control; with PASM; mark: Club Sport; Conditions see certificates VA: lowering (expertise): 15-35 mm HA: lowering (expertise): 15-35 mm
B16 DTC	**3.6 Carrera 4, 3.6 Carrera 4, 3.8 Carrera 4S** 11/06 - 239 -283 kW	**49-135817**		with electronic suspension control; with PASM; Conditions see certificates VA: lowering (expertise): 25-35 mm HA: lowering (expertise): 15-35 mm
PORSCHE 911 (991)				
B4	**3.4 Carrera, 3.8 Carrera S** 12/11 - 257 -294 kW	**22-219947**	**24-219952**	with standard chassis; without electronic suspension control; without PASM
B4 DTC	**3.4 Carrera, 3.8 Carrera S** 12/11 - 257 -294 kW	**23-219960**	**26-219974**	with standard chassis; with electronic suspension control; with PASM
B4 DTC	**3.4 Carrera, 3.8 Carrera S** 12/11 - 257 -294 kW	**23-219984**	**26-219998**	with sports suspension; with electronic suspension control; with PASM
B6 Sport	**3.4 Carrera, 3.8 Carrera S** 12/11 - 257 -294 kW	**22-218469**	**24-218474**	without electronic suspension control; without PASM
B6 DTC	**3.4 Carrera, 3.8 Carrera S** 12/11 - 257 -294 kW	**23-218482**	**26-218496**	with electronic suspension control; with PASM
B16 PSS10	**3.4 Carrera, 3.8 Carrera S** 12/11 - 257 -294 kW	**48-216036**		without electronic suspension control; without PASM; Conditions see certificates
B16 PSS10	**3.4 Carrera, 3.8 Carrera S** 12/11 - 257 -294 kW	**48-216036**		without electronic suspension control; without PASM; with active stabilizer; mark: I031; I352; Conditions see certificates; Only in connection with 1x 11-223900
B16 DTC	**3.4 Carrera, 3.8 Carrera S** 12/11 - 257 -294 kW	**49-216042**		with electronic suspension control; with PASM; Conditions see certificates

P

PORSCHE

PORSCHE 911 (991)

B16 DTC	**3.4 Carrera, 3.8 Carrera S** 12/11 - 257 -294 kW		49-216042	with electronic suspension control; with PASM; with active stabilizer; mark: I031; I352; Conditions see certificates; Only in connection with 1x 11-223900

PORSCHE 911 Convertible (991)

B4	**3.4 Carrera, 3.8 Carrera S** 12/11 - 257 -294 kW			
B6 Sport	**3.4 Carrera, 3.8 Carrera S** 12/11 - 257 -294 kW	22-218469	24-218474	without electronic suspension control; without PASM
B16 PSS10	**3.4 Carrera, 3.8 Carrera S** 12/11 - 257 -294 kW		48-216036	without electronic suspension control; without PASM; Conditions see certificates
B16 PSS10	**3.4 Carrera, 3.8 Carrera S** 12/11 - 257 -294 kW		48-216036	without electronic suspension control; without PASM; with active stabilizer; mark: I031; I352; Conditions see certificates; Only in connection with 1x 11-223900
B16 DTC	**3.4 Carrera, 3.8 Carrera S** 12/11 - 257 -294 kW		49-216042	with electronic suspension control; with PASM; Conditions see certificates
B16 DTC	**3.4 Carrera, 3.8 Carrera S** 12/11 - 257 -294 kW		49-216042	with electronic suspension control; with PASM; with active stabilizer; mark: I031; I352; Conditions see certificates; Only in connection with 1x 11-223900

PORSCHE 912

B6 Sport	**1.6** 01/65 - 12/69 66 kW	34-001127	24-001670	for bolted struts only VA: Suspension Strut Manufacturer Boge

PORSCHE 912 Targa

B6 Sport	**1.6** 03/65 - 02/70 66 kW	34-001127	24-001670	for bolted struts only

PORSCHE 914

B6 Sport	**2.0** 01/72 - 12/75 74 kW	34-001127	24-001793	
B6 Sport	**/6 2.0, 1.7, 1.8** 01/69 - 02/76 59 -81 kW		24-001793	

PORSCHE 924

B6 Sport	**2.0, 2.0 Carrera GT, 2.0 Turbo, 2.5 S** 11/75 - 08/84 92 -154 kW	34-000403	24-001618	VA: Suspension Strut Manufacturer Boge; for bolted struts only
B6 Sport	**2.0, 2.0 Carrera GT, 2.0 Turbo, 2.5 S** 11/75 - 08/84 92 -154 kW	34-001042	24-001618	mark: GT VA: Suspension Strut Manufacturer Boge; for bolted struts only
B6 Sport	**2.0, 2.0 Carrera GT, 2.0 Turbo, 2.5 S** 09/84 - 08/89 92 -154 kW	34-000403	24-020527	VA: Suspension Strut Manufacturer Boge; for bolted struts only; charakteristic: 150/95
B6 Sport	**2.0, 2.0 Carrera GT, 2.0 Turbo, 2.5 S** 09/84 - 08/89 92 -154 kW	34-001042	24-020527	VA: Suspension Strut Manufacturer Boge; for bolted struts only; charakteristic: 150/120
B6 Sport	**2.5 S** 09/85 - 07/88 110 -118 kW	34-000403	24-020527	VA: Suspension Strut Manufacturer Boge; for bolted struts only; charakteristic: 150/95
B6 Sport	**2.5 S** 09/85 - 07/88 110 -118 kW	34-001042	24-020527	VA: Suspension Strut Manufacturer Boge; for bolted struts only; charakteristic: 150/120

PORSCHE 928

B6 Sport	**4.4, 4.6 S** 09/77 - 07/83 177 -221 kW		24-009744	
B6 Sport	**4.6 S** 08/83 - 02/84 228 kW		24-009744	

P

PORSCHE

PORSCHE 928

B6 Sport	**4.6 S, 4.7** 02/84 - 07/86 200 -228 kW	**24-009669**	**24-009744**	
B6 Sport	**4.9 S, 4.9 S,S4, 5.0 GT, 5.0 S4 CAT, 5.4 GTS** 09/85 - 11/95 212 -257 kW	**24-009669**	**24-009744**	

PORSCHE 944

B6 Sport	**2.5, 2.5 S, 2.5 Turbo, 2.7, 3.0 S2** 01/85 - 07/91 110 -184 kW	**34-000403**	**24-020527**	VA: Suspension Strut Manufacturer Boge; for bolted struts only
B6 Sport	**2.5** 06/81 - 08/84 120 kW	**34-000403**	**24-001618**	VA: Suspension Strut Manufacturer Boge; for bolted struts only
B6 Sport	**2.5** 09/84 - 07/87 120 kW	**34-000403**	**24-020527**	VA: Suspension Strut Manufacturer Boge; for bolted struts only; charakteristic: 150/95
B6 Sport	**2.5** 09/84 - 07/87 120 kW	**34-001042**	**24-020527**	VA: Suspension Strut Manufacturer Boge; for bolted struts only; charakteristic: 150/120
MS	**3.0 S2** 12/88 - 07/91 155 kW	**35-593744** **35-593751**	24-176422 *24-593762*	mark: Cup

PORSCHE 944 Convertible

B6 Sport	**2.5 Turbo, 3.0 S2** 12/88 - 07/91 155 -184 kW	**34-000403**	**24-020527**	VA: Suspension Strut Manufacturer Boge; for bolted struts only
B6 Sport	**2.5 Turbo, 3.0 S2** 12/88 - 07/91 155 -184 kW	**34-001042**	**24-020527**	mark: GT VA: Suspension Strut Manufacturer Boge; for bolted struts only

PORSCHE 968

B6 Sport	**3.0, 3.0 Turbo S** 06/91 - 11/95 176 -224 kW	**34-001042**	**24-020527**	mark: GT VA: Suspension Strut Manufacturer Boge; for bolted struts only
MS	**3.0 Turbo S** 03/93 - 11/95 224 kW	**35-593744** **35-593751**	*24-593762*	mark: Cup

PORSCHE 968 Convertible

B6 Sport	**3.0** 06/91 - 11/95 176 kW	**34-001042**	**24-020527**	mark: GT VA: Suspension Strut Manufacturer Boge; for bolted struts only

PORSCHE BOXSTER (986)

B4	**2.5, 2.7, S 3,2, S 3.2** 09/96 - 150 -196 kW	**22-113313**	**22-113320**	
B6 Sport	**2.5, 2.7, S 3,2, S 3.2** 09/96 - 150 -196 kW	**22-046215**	**22-046222**	
B8	**2.5, 2.7, S 3,2, S 3.2** 09/96 - 150 -196 kW	**22-046239**	**22-046246**	
B12 PK	**2.5, 2.7** 09/96 - 150 -168 kW	**46-193803**		Conditions see certificates VA: lowering (expertise): 25 mm; axle load to: 775 kg HA: lowering (expertise): 25 mm; axle load to: 940 kg
B16 PSS9	**2.5, 2.7, S 3,2, S 3.2** 09/96 - 150 -196 kW	**48-088473**		Spacers required for several wheel/tyre combinations; Conditions see certificates VA: lowering (expertise): 15-35 mm; axle load to: 775 kg HA: lowering (expertise): 10-30 mm; axle load to: 920 kg
B16 PSS9	**2.5, 2.7, S 3,2, S 3.2** 09/96 - 150 -196 kW	**48-181440**		Only for United States of America

P

PORSCHE				
PORSCHE BOXSTER (987)				
B4	**2.7, 2.9, S 3.2, S 3.4, Spyder 3.4** 11/04 - 176 -235 kW	**22-147578**	**22-147585**	without electronic suspension control; without PASM
B4 DTC	**2.7, 2.9, S 3.2, S 3.4, Spyder 3.4** 11/04 - 176 -235 kW	**22-147592**	**22-147608**	with electronic suspension control; with PASM
B6 Sport	**2.7, 2.9, S 3.2, S 3.4, Spyder 3.4** 11/04 - 176 -235 kW	**35-122180**	**35-122197**	without PASM
B6 DTC	**2.7, 2.9, S 3.2, S 3.4, Spyder 3.4** 11/04 - 176 -235 kW	**35-122111**	**35-122128**	with PASM
B8	**2.7, 2.9, S 3.2, S 3.4, Spyder 3.4** 11/04 - 176 -235 kW	**35-122203**	**35-122210**	without PASM
B8 DTC	**2.7, 2.9, S 3.2, S 3.4, Spyder 3.4** 11/04 - 176 -235 kW	**35-122135**	**35-122142**	with PASM
B12 PK	**2.7, 2.9, S 3.2, S 3.4, Spyder 3.4** 11/04 - 176 -235 kW	**46-190673**		without PASM; Conditions see certificates VA: lowering (expertise): 30 mm; axle load to: 785 kg HA: lowering (expertise): 30 mm; axle load to: 940 kg
B14	**2.7, 2.9, S 3.2, S 3.4, Spyder 3.4** 11/04 - 176 -235 kW	*47-121928*		without PASM; Conditions see certificates VA: lowering (expertise): 25-45 mm; axle load to: 775 kg HA: lowering (expertise): 25-45 mm; axle load to: 940 kg
B16 PSS9	**2.7, 2.9, S 3.2, S 3.4, Spyder 3.4** 11/04 - 176 -235 kW	**48-121897**		without PASM; Conditions see certificates VA: lowering (expertise): 25-45 mm; axle load to: 775 kg HA: lowering (expertise): 25-45 mm; axle load to: 940 kg
B16 DTC	**2.7, 2.9, S 3.2, S 3.4, Spyder 3.4** 11/04 - 176 -235 kW	**49-122046**		with PASM; Conditions see certificates VA: lowering (expertise): 25-45 mm; axle load to: 775 kg HA: lowering (expertise): 25-45 mm; axle load to: 940 kg
PORSCHE BOXSTER				
B6 Sport	**2.7, S 3.4** 04/12 - 195 -232 kW	**22-218469**	**24-218474**	without electronic suspension control; without PASM
B6 DTC	**2.7, S 3.4** 04/12 - 195 -232 kW	**23-218482**	**26-218496**	with electronic suspension control; with PASM
B16 PSS10	**2.7, S 3.4** 04/12 - 195 -232 kW	**48-223867**		Conditions see certificates VA: lowering (expertise): 10-30 mm HA: lowering (expertise): 10-30 mm
B16 DTC	**2.7, S 3.4** 04/12 - 195 -232 kW	**49-223873**		Conditions see certificates VA: lowering (expertise): 10-30 mm HA: lowering (expertise): 10-30 mm
PORSCHE CAYENNE (955)				
B3	**3.2, 3.2 S4** 08/03 - 177 -184 kW	**36-199358**	**36-199372**	with standard chassis
B3	**3.0 TDI, 3.6** 02/07 - 176 -213 kW	**36-199365**	**36-199372**	with standard chassis
B3	**3.0 TDI, 3.2, 3.2 S4, 3.6** 02/07 - 176 -213 kW		**36-199389**	with standard chassis; Heavy Duty Version .
B6 Offroad	**3.0 TDI, 3.2, 3.2 S4, 3.6, S 4.5, S 4.8, Turbo 4.5, Turbo S 4.5, Turbo S 4.8** 08/08 - 176 -404 kW	**35-110552** **35-110569**	**24-110570**	without pneumatic suspension
B8	**3.0 TDI, 3.2, 3.2 S4, 3.6, S 4.5, S 4.8, Turbo 4.5, Turbo S 4.5, Turbo S 4.8** 08/08 - 176 -404 kW	**35-110583** **35-110590**	**24-110600**	without pneumatic suspension
B12 PK	**3.2, 3.2 S4, S 4.5** 09/02 - 01/07 177 -250 kW	**46-187918**		without ride height adjustment; Conditions see certificates; without pneumatic suspension VA: lowering (expertise): 35 mm; axle load to: 1460 kg HA: lowering (expertise): 35 mm; axle load to: 1680 kg

P

PORSCHE

PORSCHE CAYENNE (955)

PORSCHE CAYENNE

B4	**3.0 D, 3.0 S, 3.6, 4.8 Turbo, S 4.8, S Hybrid 3.0** 06/10 - 155 -397 kW	**19-194875** VA **19-194899** HA	**19-194882**	with standard chassis; without PASM; without pneumatic suspension
B6 Offroad	**3.0 D, 3.0 S, 3.6, 4.8 Turbo, S 4.8, S Hybrid 3.0** 06/10 - 155 -397 kW	**24-197069** VA **24-197076** HA	**24-197083**	

PORSCHE CAYMAN

B4	**2.7, 2.9, S 3.4** 11/05 - 180 -235 kW	**22-147578**	**22-147585**	without electronic suspension control; without PASM
B4 DTC	**2.7, 2.9, S 3.4** 11/05 - 180 -235 kW	**22-147592**	**22-147608**	with electronic suspension control; with PASM
B6 Sport	**2.7, 2.9, R 3.4, S 3,4 Sport, S 3.4** 11/05 - 180 -243 kW	**35-122180**	**35-122197**	without PASM
B6 DTC	**2.7, 2.9, R 3.4, S 3,4 Sport, S 3.4** 11/05 - 180 -243 kW	**35-122111**	**35-122128**	with PASM
B8	**2.7, 2.9, R 3.4, S 3,4 Sport, S 3.4** 11/05 - 180 -243 kW	**35-122203**	**35-122210**	without PASM
B8 DTC	**2.7, 2.9, R 3.4, S 3,4 Sport, S 3.4** 11/05 - 180 -243 kW	**35-122135**	**35-122142**	with PASM
B12 PK	**2.7, 2.9, R 3.4, S 3,4 Sport, S 3.4** 11/05 - 180 -243 kW	**46-190697**		without PASM; Conditions see certificates VA: lowering (expertise): 30 mm; axle load to: 785 kg HA: lowering (expertise): 30 mm; axle load to: 940 kg
B14	**2.7, 2.9, R 3.4, S 3,4 Sport, S 3.4** 11/05 - 180 -243 kW	*47-121928*		without PASM; Conditions see certificates VA: lowering (expertise): 25-45 mm; axle load to: 775 kg HA: lowering (expertise): 25-45 mm; axle load to: 940 kg
B16 PSS9	**2.7, 2.9, R 3.4, S 3,4 Sport, S 3.4** 11/05 - 180 -243 kW	**48-121897**		without PASM; Conditions see certificates VA: lowering (expertise): 25-45 mm; axle load to: 775 kg HA: lowering (expertise): 25-45 mm; axle load to: 940 kg
B16 DTC	**2.7, 2.9, R 3.4, S 3,4 Sport, S 3.4** 11/05 - 180 -243 kW	**49-122046**		with PASM; Conditions see certificates VA: lowering (expertise): 25-45 mm; axle load to: 775 kg HA: lowering (expertise): 25-45 mm; axle load to: 940 kg

PROTON

PROTON PERSONA 300 (C9_M)

B3	**315 GLi/GLSi, 315 GLSi** 03/96 - 64 -66 kW	**36-216246**	**36-200542**	with standard chassis

PROTON PERSONA 400 Hatchback (C9_C, C9_S)

B4	**416 GLXi** 01/94 - 83 kW	*22-047847* VA *22-047854* HA	*19-063386*	with standard chassis VA: -> 11/95

PROTON PERSONA 400 (C9_S)

B3	**413, 415 GLi/GLSi** 01/94 - 55 -66 kW	**36-216246**		with standard chassis
B4	**416 GLXi** 01/94 - 83 kW	*22-047847* VA *22-047854* HA	*19-063386*	with standard chassis VA: -> 11/95

PUCH

PUCH G-MODELL (W 460)

B4	**230 G, 230 GE, 240 GD, 250 GD, 280 GE, 300 GD** 12/79 - 12/91 53 -110 kW	**24-113366**	**24-113373**	
B6 Offroad	**230 G, 230 GE, 240 GD, 250 GD, 280 GE, 300 GD** 12/79 - 12/91 53 -110 kW	**24-005043**	**24-005142**	

PUCH G-MODELL (W 461)

B4	**230 GE, 290 GD/G 290 D, G 290 TD** 04/92 - 70 -92 kW	**24-113366**	**24-113373**	
B6 Offroad	**230 GE, 290 GD/G 290 D, G 290 TD** 04/92 - 70 -92 kW	**24-005043**	**24-005142**	

PUCH G-MODELL (W 463)

B4	**230 GE, 300 GE, G 320** 06/90 - 12/97 93 -155 kW	**24-018593**	**24-018609**	
B4	**300 GD, 350 G Turbo D, G 300 TD, G 500** 09/89 - 83 -218 kW	**24-017275**	**24-017282**	
B6 Offroad	**230 GE, 300 GD, 300 GE, 350 G Turbo D, G 300 TD, G 320, G 36 AMG** 09/89 - 83 -200 kW	**24-016353**	**24-016360**	

RENAULT

RENAULT CLIO I (B/C57_, 5/357_)

B1	**1.2, 1.4, 1.8, 1.8 Rsi, 1.9 D, 1.9 D** 01/91 - 09/98 40 -80 kW	**12-224203**		VA: with ball bearing
B3	**1.1, 1.2** 05/90 - 09/98 34 -43 kW	**36-130542**		with standard chassis
B3	**1.4, 1.7, 1.8** 08/90 - 09/98 55 -70 kW	**36-130559**		with standard chassis
B3	**1.4, 1.7, 1.8** 08/90 - 09/98 55 -70 kW	**36-160211**		with standard chassis; Heavy Duty Version .
B3	**1.9 D, 1.9 D** 01/91 - 09/98 40 -48 kW	**36-160211**		with standard chassis
B4	**1.1** 01/91 - 07/97 34 -36 kW	**22-041128**	**19-019987**	VA: fixing hole pitches at the front 52 mm
B4	**1.2, 1.4** 01/91 - 07/97 40 -59 kW	**22-041128**	**19-019987**	VA: fixing hole pitches at the front 52 mm
B4	**1.2, 1.4** 01/91 - 07/97 40 -59 kW	**22-041166**	**19-019987**	with standard chassis VA: fixing hole pitches at the front 54 mm
B4	**1.2, 1.4** 07/97 - 09/98 40 -59 kW		**19-019987**	with standard chassis VA: fixing hole pitches at the front 58 mm
B4	**1.7, 1.8, 1.8 16V, 1.8 Rsi, 1.9 D, 1.9 D** 08/90 - 07/97 40 -99 kW	**22-041166**	**19-019987**	VA: fixing hole pitches at the front 54 mm
B4	**1.8, 1.8 Rsi, 1.9 D, 1.9 D** 07/97 - 09/98 40 -79 kW		**19-019987**	VA: fixing hole pitches at the front 58 mm
B6 Sport	**1.4, 1.8, 1.9 D** 08/90 - 12/93 47 -70 kW	**35-040460**	**24-018333**	fixing hole pitches at the front 54 mm

RENAULT

RENAULT CLIO I (B/C57_, 5/357_)

B6 Sport	**1.4, 1.8, 1.9 D, 1.9 D** 01/94 - 09/98 40 -70 kW	**35-042747**	**24-018333**	fixing hole pitches at the front 52 mm
B6 Sport	**1.8 16V** 01/91 - 12/93 99 kW	**35-040477**	**24-018333**	
B6 Sport	**1.8 16V** 01/94 - 03/96 99 kW	**35-043256**	**24-026314**	
B8	**1.4, 1.8, 1.9 D** 08/90 - 12/93 47 -70 kW	**35-040460**	**24-018333**	fixing hole pitches at the front 54 mm
B8	**1.4, 1.8, 1.9 D, 1.9 D** 01/94 - 09/98 40 -70 kW	**35-042747**	**24-018333**	fixing hole pitches at the front 52 mm
B8	**1.8 16V** 01/91 - 12/93 99 kW	**35-040477**	**24-018333**	
B8	**1.8 16V** 01/94 - 03/96 99 kW	**35-043256**	**24-026314**	
MS	**1.8 16V, 1.8 Rsi, Williams** 01/91 - 09/98 79 -108 kW		**24-022217**	

RENAULT CLIO I Box (S57_)

B3	**1.1, 1.2** 01/91 - 09/98 34 -44 kW	**36-130542**		with standard chassis
B3	**1.9 D, 1.9 RND** 01/91 - 09/98 40 -48 kW	**36-160211**		with standard chassis
B4	**1.1, 1.2, 1.9 D** 01/91 - 09/98 34 -48 kW		**19-019987**	VA: fixing hole pitches at the front 58 mm
B4	**1.9 RND** 04/96 - 02/98 40 kW		**19-019987**	VA: fixing hole pitches at the front 58 mm

RENAULT CLIO II (BB0/1/2_, CB0/1/2_)

B1	**1.2, 1.2 16V, 1.4, 1.4 16V, 1.5 D, 1.5 dCi, 1.6, 1.6 16V, 1.6 Hi-Flex, 1.9 D, 1.9 dTi, 2.0 16V Sport** 09/98 - 43 -124 kW	**12-117024**		VA: with ball bearing
B3	**1.0, 1.2, 1.2 16V** 03/99 - 40 -55 kW	**36-130603**	**38-130564**	with standard chassis
B3	**1.4, 1.4 16V, 1.5 D, 1.5 dCi, 1.6, 1.6 16V, 1.6 Hi-Flex, 1.9 D, 1.9 dTi** 09/98 - 02/10 47 -86 kW	**36-130610**	**38-130564**	with standard chassis
B4	**1.0, 1.2, 1.2 16V, 1.4, 1.4 16V, 1.5 D, 1.5 dCi, 1.6, 1.6 16V, 1.6 Hi-Flex, 1.9 D, 1.9 dTi** 12/99 - 05/05 40 -86 kW	i.V. *22-102089*	**19-109565** **11-149828** SP	with standard chassis VA: fixing hole pitches at the front 58 mm
B4	**1.0, 1.2, 1.2 16V, 1.4, 1.4 16V, 1.5 D, 1.5 dCi, 1.6, 1.6 16V, 1.6 Hi-Flex, 1.9 D, 1.9 dTi** 12/99 - 05/05 40 -86 kW	**22-127426**	**19-109565** **11-149828** SP	fixing hole pitches at the front 52 mm; with standard chassis
B6 Sport	**1.0, 1.2, 1.2 16V, 1.4, 1.4 16V, 1.5 D, 1.5 dCi, 1.6, 1.6 16V, 1.6 Hi-Flex, 1.9 D, 1.9 dTi** 12/99 - 05/05 40 -86 kW	**35-051145**	**24-065733**	fixing hole pitches at the front 52 mm

R

RENAULT				
RENAULT CLIO II (BB0/1/2_, CB0/1/2_)				
B6 Sport	**1.0, 1.2, 1.2 16V, 1.4, 1.4 16V, 1.5 D, 1.5 dCi, 1.6, 1.6 16V, 1.6 Hi-Flex, 1.9 D, 1.9 dTi** 12/99 - 05/05 40 -86 kW	**35-051169**	**24-065733**	fixing hole pitches at the front 58 mm
B8	**1.0, 1.2, 1.2 16V, 1.4, 1.4 16V, 1.5 D, 1.5 dCi, 1.6, 1.6 16V, 1.6 Hi-Flex, 1.9 D, 1.9 dTi** 12/99 - 05/05 40 -86 kW	**35-051152**	**24-065740**	fixing hole pitches at the front 52 mm
B8	**1.0, 1.2, 1.2 16V, 1.4, 1.4 16V, 1.5 D, 1.5 dCi, 1.6, 1.6 16V, 1.6 Hi-Flex, 1.9 D, 1.9 dTi** 12/99 - 05/05 40 -86 kW	**35-051176**	**24-065740**	fixing hole pitches at the front 58 mm
B14	**2.0 16V Sport** 02/00 - 02/02 124 kW	**47-087750**		fixing hole pitches at the front 54 mm; Conditions see certificates VA: lowering (expertise): 25-30 mm; axle load to: 860 kg HA: lowering (expertise): 25-30 mm; axle load to: 820 kg
RENAULT CLIO II Box (SB0/1/2_)				
B1	**1.1, 1.2, 1.5 dCi, 1.6 X, 1.9 D, 1.9 DTi** 09/98 - 40 -79 kW	**12-117024**		VA: with ball bearing
B3	**1.1, 1.2** 09/98 - 43 -44 kW	**36-130603**	**38-130564**	with standard chassis
B3	**1.5 dCi, 1.6 X, 1.9 D, 1.9 DTi** 02/00 - 40 -79 kW	**36-130610**	**38-130564**	with standard chassis
B4	**1.1, 1.2, 1.5 dCi, 1.6 X, 1.9 D, 1.9 DTi** 09/98 - 40 -79 kW	*22-102089* **11-149828** SP	**19-109565**	with standard chassis VA: fixing hole pitches at the front 58 mm
B4	**1.1, 1.2, 1.5 dCi, 1.6 X, 1.9 D, 1.9 DTi** 09/98 - 40 -79 kW	**22-127426** **11-149828** SP	**19-109565**	fixing hole pitches at the front 52 mm; with standard chassis
B6 Sport	**1.1, 1.2, 1.5 dCi, 1.6 X, 1.9 D, 1.9 DTi** 09/98 - 40 -79 kW	**35-051145**	**24-065733**	fixing hole pitches at the front 52 mm
B6 Sport	**1.1, 1.2, 1.5 dCi, 1.6 X, 1.9 D, 1.9 DTi** 09/98 - 40 -79 kW	**35-051169**	**24-065733**	fixing hole pitches at the front 58 mm
RENAULT CLIO III (BR0/1, CR0/1)				
B1	**1.2 16V, 1.2 16V Hi-Flex, 1.2 SL, 1.4 16V, 1.5 dCi, 1.6 16V, 1.6 Hi-Flex, 2.0 16V, 2.0 16V Sport** 05/05 - 47 -145 kW	**12-224364** **12-224357**		VA: with ball bearing
B3	**1.2 16V, 1.2 16V Hi-Flex, 1.2 SL, 1.4 16V, 1.6 16V, 1.6 Hi-Flex** 05/05 - 03/09 48 -86 kW	**36-148080**	**36-148097**	with standard chassis
B3	**1.2 16V, 1.2 16V Hi-Flex, 1.2 SL, 1.4 16V, 1.6 16V, 1.6 Hi-Flex** 05/05 - 03/09 48 -86 kW	**36-160167**		with standard chassis; Heavy Duty Version .
B3	**2.0 16V** 09/06 - 102 kW	**36-160167**	**36-148097**	with standard chassis
B3	**1.5 D, 1.5 dCi** 06/05 - 03/09 47 -78 kW	**36-160167**	**36-148097**	with standard chassis
B3	**1.5 D, 1.5 dCi** 06/05 - 03/09 47 -78 kW	**36-148080**	**36-148097**	with standard chassis; mark: Campus
B3	**1.5 D, 1.5 dCi** 06/05 - 03/09 47 -78 kW	**36-160167**		with standard chassis; Heavy Duty Version .; mark: Campus

R

RENAULT			
RENAULT CLIO III (BR0/1, CR0/1)			
B4 **1.2 16V, 1.2 16V Hi-Flex, 1.2 SL, 1.4 16V, 1.5 D, 1.5 dCi, 1.6 16V, 1.6 16V GT, 1.6 Hi-Flex, 2.0 16V** 05/05 - 47 -102 kW	**22-167071**	**19-167060**	
B6 Sport **1.2 16V, 1.2 16V Hi-Flex, 1.2 SL, 1.4 16V, 1.5 D, 1.5 dCi, 1.6 16V, 1.6 16V GT, 1.6 Hi-Flex, 2.0 16V** 05/05 - 47 -102 kW	**35-128625**	**24-128636**	
B8 **1.2 16V, 1.2 16V Hi-Flex, 1.2 SL, 1.4 16V, 1.5 D, 1.5 dCi, 1.6 16V, 1.6 16V GT, 1.6 Hi-Flex, 2.0 16V** 05/05 - 47 -102 kW	**35-128649**	**24-128650**	
B14 **1.2 16V, 1.2 16V Hi-Flex, 1.2 SL, 1.4 16V, 1.5 D, 1.5 dCi, 1.6 16V, 1.6 Hi-Flex, 2.0 16V** 05/05 - 03/09 47 -102 kW	**47-128705**		Conditions see certificates VA: lowering (expertise): 40-55 mm; axle load to: 950 kg HA: lowering (expertise): 40-55 mm; axle load to: 880 kg
RENAULT CLIO Grandtour (KR0/1_)			
B1 **1.2 16V, 1.5 dCi, 1.6 16V, 16V Hi-Flex** 02/08 - 50 -94 kW	**12-224364** **12-224357**		VA: with ball bearing
B4 **1.2 16V, 1.5 dCi, 1.6 16V, 16V Hi-Flex** 02/08 - 50 -94 kW	**22-167071**		
RENAULT ESPACE I (J11_)			
B4 **2.0, 2.0 i, 2.0 i Quadra, 2.1 TD, 2.2, 2.2 Quadra** 07/86 - 12/92 65 -87 kW	*19-065243*		
RENAULT ESPACE II (J/S63_)			
B6 Sport **2.0, 2.1 TD, 2.2, 2.8 V6** 01/91 - 10/96 65 -110 kW	**24-016384**	**24-016391**	without ride height adjustment
RENAULT ESPACE III (JE0_)			
B3 **2.0, 2.0 16V** 11/96 - 10/02 84 -103 kW	**36-201440**	36-202935	with standard chassis
B3 **1.9 dTi** 02/99 - 10/02 72 kW	**36-201440**	36-202935	with standard chassis
B3 **2.2 12V TD, 2.2 dCi, 3.0** 11/96 - 10/02 83 -123 kW	**36-201020**	36-202935	with standard chassis
B4 **1.9 dTi, 2.0, 2.0 16V, 2.2 12V TD, 2.2 D, 2.2 dCi, 3.0, 3.0 V6 24V** 10/98 - 10/02 72 -140 kW		**19-065236**	
RENAULT ESPACE IV (JK0/1_)			
B3 **2.0 Turbo** 11/02 - 120 kW	36-222445	**36-198139**	with standard chassis
B3 **1.9 dCi, 1.9 DCi Expression, 2.0** 11/02 - 85 -125 kW	36-199419	**36-198139**	with standard chassis
B3 **2.2 dCi** 11/02 - 102 -110 kW	36-199426	**36-198139**	with standard chassis; manual transmission
B3 **2.2 dCi** 11/02 - 102 -110 kW	36-199433	**36-198139**	with standard chassis; automatic transmission

R

RENAULT				
RENAULT ESPACE IV (JK0/1_)				
B3	**3.0 dCi** 11/02 - 130 -133 kW	36-199433	**36-198139**	with standard chassis
B4	**1.9 dCi, 1.9 DCi Expression, 2.0, 2.0 dCi, 2.0 Turbo, 2.2 dCi, 3.0 dCi, 3.5 V6** 11/02 - 85 -177 kW	**22-128188**	**19-128191**	
RENAULT FUEGO (136_)				
B3	**1.4 TL/GTL, 1.6 TS/GTS, 1.6 Turbo, 2.0 TX/GTX, 2.1 TD** 02/80 - 10/85 47 -97 kW	**36-160518**	**36-160464**	with standard chassis
RENAULT KANGOO (KC0/1_)				
B1	**1.2, 1.2 16V, 1.4, 1.5 dCi, 1.6 16V, 1.9 dTi, D 55 1.9, D 65 1.9** 08/97 - 40 -70 kW	**12-117024**		VA: with ball bearing
B3	**1.2** 08/97 - 43 kW	**36-198337**		with standard chassis
B3	**1.2** 08/97 - 43 kW	**36-212583**		with standard chassis; Heavy Duty Version .
B3	**1.2 16V** 06/01 - 55 kW	**36-212583**		with standard chassis
B3	**1.4** 08/97 - 55 kW	**36-217229**		with standard chassis
B3	**1.4** 08/97 - 55 kW	**36-217236**		with standard chassis; Heavy Duty Version .
B3	**1.6 16V, 1.6 16V bivalent, 1.9 dTi, D 55 1.9, D 65 1.9** 08/97 - 40 -70 kW	**36-217366**		with standard chassis
B3	**1.6 16V, 1.6 16V bivalent, 1.9 dTi, D 55 1.9, D 65 1.9** 08/97 - 40 -70 kW	36-217373		with standard chassis; Heavy Duty Version .
B3	**1.6 16V 4x4, 1.9 dCi 4x4** 10/01 - 59 -70 kW		36-217380	with standard chassis
B3	**1.5 dCi** 07/02 - 42 -62 kW	**36-217236**		with standard chassis
B3	**1.5 dCi** 07/02 - 42 -62 kW	**36-217366**		with standard chassis; Heavy Duty Version .
B4	**1.2, 1.2 16V, 1.4, 1.5 dCi, 1.6 16V, 1.6 16V bivalent, 1.9 dTi, D 55 1.9, D 65 1.9** 08/97 - 40 -70 kW	**22-111715**	**19-111728**	with standard chassis
RENAULT KANGOO Express (FC0/1_)				
B1	**1.0, 1.2, 1.2 16V, 1.4, 1.5 dCi, 1.6 16V, 1.9 D, 1.9 dTi, D 55 1.9, D 65 1.9** 08/97 - 40 -70 kW	**12-117024**		VA: with ball bearing
B4	**1.0, 1.2, 1.2 16V, 1.4, 1.5 dCi, 1.6 16V, 1.9 D, 1.9 dci, 1.9 dTi, D 55 1.9, D 65 1.9** 08/97 - 40 -70 kW	**22-111715**	**19-111728**	

R

RENAULT

RENAULT KOLEOS (VY_)

B4	**2.0 dCi, 2.0 dCi 4x4, 2.5, 2.5 4x4** 09/08 - 110 -130 kW	22-213747 ↰ 22-213754 ↱	**19-213767** OIO	with standard chassis

RENAULT LAGUNA (B56_, 556_)

B1	**1.6 16V, 1.8, 1.8 16V, 1.8 i, 1.9 dCi, 1.9 dTi, 2.0, 2.0 16V, 2.2 D, 2.2 dT, 3.0, 3.0 24V** 03/97 - 03/01 61 -140 kW	**12-117444** ↰ **12-117451** ↱		VA: with ball bearing
B3	**1.6 16V, 1.8 16V, 2.0, 3.0, 1.6 16V, 1.8, 1.8 16V, 1.9 dCi, 1.9 dTi, 2.0, 2.0 16V** 09/95 - 03/01 66 -123 kW	**37-154745**		with standard chassis
B3	**1.8** 11/93 - 03/01 66 -70 kW	*37-163372*		with standard chassis
B3	**1.8** 11/93 - 03/01 66 -70 kW	**37-154745**		with standard chassis; Heavy Duty Version .
B3	**1.9 dCi, 1.9 dTi, 2.0 16V** 06/95 - 03/01 72 -103 kW	**37-154745**		with standard chassis
B3	**1.9 dCi, 1.9 dTi, 2.0 16V** 06/95 - 03/01 72 -103 kW	**37-154752**		with standard chassis; Heavy Duty Version .
B3	**2.2 D, 2.2 dT, 3.0 24V** 11/93 - 03/01 61 -140 kW	**37-154752**		with standard chassis
B4	**1.6 16V, 1.8, 1.8 16V, 1.8 i, 2.0, 2.0 16V** 06/95 - 03/01 66 -103 kW	**22-046871**	**22-046888**	opening of fixing clamp at front 34 mm; with standard chassis
B4	**1.8, 1.8 16V, 1.8 i, 2.0, 2.0 16V** 11/93 - 03/01 66 -103 kW	*22-046864*	**22-046888**	opening of fixing clamp at front 24 mm; with standard chassis
B4	**1.9 dCi, 1.9 dTi, 2.2 D, 2.2 dT, 3.0, 3.0 24V** 03/97 - 03/01 61 -140 kW	**22-046871**	**22-046888**	with standard chassis

RENAULT LAGUNA Grandtour (K56_)

B1	**1.6 16V, 1.8, 1.8 16V, 1.9 dCi, 1.9 dTi, 2.0, 2.0 16V, 2.2 D, 2.2 dT, 3.0** 02/96 - 03/01 61 -123 kW	**12-117444** ↰ **12-117451** ↱		VA: with ball bearing
B3	**1.9 dCi, 1.9 dTi, 2.0, 2.0 16V** 09/95 - 03/01 72 -103 kW	**37-154752**		with standard chassis; Heavy Duty Version .
B3	**2.2 D, 2.2 dT, 3.0, 3.0 24V** 09/95 - 03/01 61 -140 kW	**37-154752**		with standard chassis
B4	**1.6 16V, 1.8, 1.8 16V, 1.9 dCi, 1.9 dTi, 2.0, 2.0 16V, 2.2 D, 2.2 dT, 3.0** 02/96 - 03/01 61 -123 kW	**22-046871**	**19-100067** OIO	HA: without ride height adjustment

RENAULT LAGUNA II (BG0/1_)

B1	**1.6 16V, 1.8 16V, 1.9 dCi, 2.0 16V, 2.0 16V IDE, 2.0 16V Turbo, 2.0 dCi, 2.2 dCi, 2.2 DCi Authentique, 3.0 V6 24V** 03/01 - 68 -152 kW	**12-224180**		VA: with ball bearing
B3	**1.6 16V** 03/01 - 79 -82 kW	**36-198320**	**36-201495**	with standard chassis
B3	**1.8 16V, 1.9 dCi, 2.0 16V, 2.0 16V IDE, 2.0 16V Turbo, 2.0 dCi** 03/01 - 68 -150 kW		**36-201495**	with standard chassis

R

RENAULT

RENAULT LAGUNA II (BG0/1_)

B3	**2.2 dCi, 2.2 DCi Authentique, 3.0 V6 24V** 03/01 - 85 -152 kW	36-217205	**36-201495**	with standard chassis
B4	**1.6 16V, 1.8 16V, 1.9 dCi, 2.0 16V, 2.0 16V IDE, 2.0 16V Turbo, 2.0 dCi, 2.2 dCi, 2.2 DCi Authentique, 3.0 V6 24V** 03/01 - 68 -152 kW	**22-131492**	i.V. *19-131627*	

RENAULT LAGUNA II Grandtour (KG0/1_)

B1	**1.6 16V, 1.8 16V, 1.9 dCi, 2.0, 2.0 16V, 2.0 16V IDE, 2.0 16V Turbo, 2.0 dCi, 2.2 dCi, 2.2 DCi Authentique, 3.0 V6 24V** 03/01 - 68 -152 kW	**12-224180**		VA: with ball bearing
B3	**1.6 16V** 03/01 - 79 -82 kW	**36-198320**	**36-211593**	with standard chassis
B3	**1.6 16V, 1.8 16V, 1.9 dCi, 2.0, 2.0 16V, 2.0 16V IDE, 2.0 16V Turbo, 2.0 dCi, 2.2 dCi, 2.2 DCi Authentique, 3.0 V6 24V** 03/01 - 68 -152 kW		36-217212	with standard chassis; Heavy Duty Version .
B3	**1.8 16V, 1.9 dCi, 2.0, 2.0 16V, 2.0 16V IDE, 2.0 16V Turbo, 2.0 dCi** 03/01 - 68 -150 kW		**36-211593**	with standard chassis
B3	**2.2 dCi, 3.0 V6 24V** 03/01 - 102 -152 kW	36-217205	**36-211593**	with standard chassis
B4	**1.6 16V, 1.8 16V, 1.9 dCi, 2.0, 2.0 16V, 2.0 16V IDE, 2.0 16V Turbo, 2.0 dCi, 2.2 dCi, 2.2 DCi Authentique, 3.0 V6 24V** 03/01 - 68 -152 kW	**22-131492**	i.V. *19-131627*	

RENAULT LAGUNA III (BT0/1)

B4	**1.5 dCi, 1.6 16V, 2.0 16V, 2.0 16V Turbo, 2.0 dCi, 2.0 dCi GT, 2.0 GT, 3.0 dCi** 10/07 - 81 -173 kW	i.V.	**19-171395**	with standard chassis

RENAULT LAGUNA III Grandtour (KT0/1)

B4	**1.5 dCi, 1.6 16V, 2.0 16V, 2.0 16V Turbo, 2.0 dCi, 2.0 dCi GT, 2.0 GT, 3.0 dCi** 10/07 - 81 -173 kW	i.V.	**19-171395**	with standard chassis

RENAULT LOGAN (LS_)

B1	**1.4, 1.5 DCi, 1.6** 09/04 - 50 -77 kW	**12-224241**		VA: with ball bearing
B3	**1.4, 1.5 DCi, 1.6** 09/04 - 50 -77 kW	**36-160433**	**36-160181**	with standard chassis
B4	**1.4, 1.5 DCi, 1.6** 09/04 - 50 -77 kW	**22-122469**	**19-122472**	
B8	**1.4, 1.5 DCi, 1.6** 09/04 - 50 -77 kW	**22-140388**	**19-140391**	

RENAULT LOGAN Estate (KS_)

B1	**1.4, 1.5 DCi, 1.6** 04/07 - 50 -77 kW	**12-224241**		VA: with ball bearing
B3	**1.4, 1.5 DCi, 1.6** 04/07 - 50 -77 kW	**36-160150**	**36-160174**	with standard chassis

RENAULT				
RENAULT LOGAN Estate (KS_)				
B4	**1.4, 1.5 DCi, 1.6** 04/07 - 50 -77 kW	**22-122469**	**19-143026**	
RENAULT MEGANE I (BA0/1_)				
B3	**1.4 16V, 1.4 e, 1.4 Eco, 1.6 16V, 1.6 e, 1.6 i** 01/96 - 52 -79 kW	**36-130573**		with standard chassis
B3	**1.9 D Eco, 1.9 dCi, 1.9 dT, 1.9 dTi, 1.9 TDI, 2.0 16V, 2.0 i** 01/96 - 47 -108 kW	**36-130597**		with standard chassis
B4	**1.4 16V, 1.4 e, 1.4 Eco, 1.6 16V, 1.6 e, 1.6 i, 1.8 16V, 1.9 D Eco, 1.9 dCi, 1.9 dT, 1.9 dTi, 1.9 TDI, 2.0 i** 01/96 - 47 -85 kW	**22-046840**	**19-061252**	VA: fixing hole pitches at the front 54 mm
B6 Sport	**1.4 16V, 1.4 e, 1.4 Eco, 1.6 16V, 1.6 e, 1.6 i, 1.8 16V, 1.9 D Eco, 1.9 dCi, 1.9 dT, 1.9 dTi, 1.9 TDI, 2.0 i** 01/96 - 47 -85 kW	**22-043375**	**24-026512**	VA: fixing hole pitches at the front 54 mm
RENAULT MEGANE I Classic (LA0/1_)				
B3	**1.4, 1.4 16V, 1.6 e, 1.6 i** 09/96 - 55 -70 kW	**36-130573**		with standard chassis
B3	**1.9 D, 1.9 dTi, 2.0 i** 09/96 - 47 -84 kW	**36-130597**		with standard chassis
B4	**1.4, 1.4 16V, 1.6 16V, 1.6 e, 1.6 i, 1.9 D, 1.9 dCi, 1.9 dT, 1.9 dTi, 1.9 TDI, 2.0 i** 09/96 - 47 -84 kW	**22-046840**	**19-061252**	VA: fixing hole pitches at the front 54 mm
B6 Sport	**1.4, 1.4 16V, 1.6 16V, 1.6 e, 1.6 i, 1.8 16V, 1.9 D, 1.9 dCi, 1.9 dT, 1.9 dTi, 1.9 TDI, 2.0 i** 09/96 - 47 -85 kW	**22-043375**	**24-026512**	VA: fixing hole pitches at the front 54 mm
RENAULT MEGANE I Grandtour (KA0/1_)				
B3	**1.4 16V, 1.4 e, 1.6 16V, 1.6 e** 03/99 - 55 -79 kW	**36-130573**		with standard chassis
B3	**1.9 D, 1.9 dCi, 1.9 dTi** 03/99 - 47 -75 kW	**36-130597**		with standard chassis
B4	**1.4 16V, 1.4 e, 1.6 16V, 1.6 e, 1.8 16V, 1.9 D, 1.9 dCi, 1.9 dTi** 03/99 - 47 -85 kW	**22-046840**	**19-214641**	VA: fixing hole pitches at the front 54 mm
RENAULT MEGANE I Coach (DA0/1_)				
B3	**1.6 16V, 1.6 e, 2.0 i** 03/96 - 08/03 66 -84 kW	**36-130573**		with standard chassis
B3	**2.0 16V, 2.0 16V IDE** 11/99 - 08/03 102 -108 kW	**36-130597**		with standard chassis
B4	**1.4 16V, 1.6 16V, 1.9 dCi, 1.9 dTi, 2.0 16V, 2.0 16V IDE, 2.0 i** 03/97 - 08/03 70 -103 kW	**22-046840**		VA: fixing hole pitches at the front 54 mm
B4	**1.6 e, 2.0 16V, 2.0 i** 03/96 - 08/03 66 -108 kW	**22-046840**		VA: 09/96 ->; fixing hole pitches at the front 54 mm

R

RENAULT				
RENAULT MEGANE I Coach (DA0/1_)				
B6 Sport	**1.4 16V, 1.6 16V, 1.6 e, 1.9 dCi, 1.9 dTi, 2.0 i** 03/96 - 08/03 66 -84 kW	**22-043375**	**24-026512**	VA: fixing hole pitches at the front 54 mm
RENAULT MEGANE I Cabriolet (EA0/1_)				
B3	**1.6 e** 10/96 - 03/99 66 kW	**36-130573**		with standard chassis
B3	**2.0 16V, 2.0 16V IDE** 11/99 - 102 -108 kW	**36-130597**		with standard chassis
B4	**1.4 16V, 1.6 16V** 03/99 - 70 -79 kW	**22-046840**	**19-061252**	VA: fixing hole pitches at the front 54 mm
B4	**1.6 e** 10/96 - 03/99 66 kW	**22-046840**	**19-061252**	VA: 02/97 ->; fixing hole pitches at the front 54 mm
B6 Sport	**1.4 16V, 1.6 16V, 1.6 e, 2.0, 2.0 i** 04/97 - 66 -84 kW	**22-043375**	**24-026512**	VA: fixing hole pitches at the front 54 mm
RENAULT MEGANE Scenic (JA0/1_)				
B3	**1.4 i, 1.6 e, 1.6 i, 1.9 D, 1.9 dT, 1.9 dTi, 2.0 i** 01/97 - 09/99 47 -84 kW	**36-130580**		with standard chassis
B4	**1.4 i, 1.6 i** 01/97 - 09/99 55 kW	**22-046840**	**19-061269**	VA: fixing hole pitches at the front 54 mm; mark: JA0F; manual transmission
B4	**1.6 e** 01/97 - 09/99 66 kW	**22-046840**	**19-061269**	VA: fixing hole pitches at the front 54 mm; mark: JA0F; manual transmission; automatic transmission
B4	**2.0 i** 01/99 - 09/99 80 kW	**22-046840**	**19-061269**	VA: fixing hole pitches at the front 54 mm
B4	**2.0 i** 01/97 - 09/99 84 kW	**22-046840**	**19-061269**	VA: 07/98 ->; fixing hole pitches at the front 54 mm
B4	**1.9 D, 1.9 dT** 01/97 - 09/99 47 -66 kW	**22-046857**	**19-061269**	VA: fixing hole pitches at the front 60 mm; mark: JA0K,JA0Y
B4	**1.9 dTi** 04/97 - 09/99 72 kW	**22-046840**	**19-061269**	VA: 07/98 ->; fixing hole pitches at the front 54 mm
B4	**1.9 dTi, 2.0 i** 01/97 - 09/99 72 -84 kW	**22-046857**	**19-061269**	VA: fixing hole pitches at the front 60 mm; mark: FA0J,FA0K,FA0Y,JA
B6 Sport	**1.4 i, 1.6 e, 1.6 i, 1.9 D, 1.9 dT, 1.9 dTi** 01/97 - 09/99 47 -72 kW	**22-043375**	**24-026505**	manual transmission VA: fixing hole pitches at the front 54 mm
B6 Sport	**2.0 i** 01/97 - 09/99 80 -84 kW	**22-043696**	**24-026505**	manual transmission
RENAULT MEGANE II (BM0/1_, CM0/1_)				
B1	**1.4 16V, 1.5 dCi, 1.6 16V, 1.6 Flex-Fuel, 1.6 GL, 1.9 dCi, 2.0 16V, 2.0 16V Turbo, 2.0 dCi** 11/02 - 60 -127 kW	**12-224227**		VA: with ball bearing
B3	**1.4 16V, 1.5 dCi, 1.6 16V, 1.6 Flex-Fuel, 1.6 GL** 11/02 - 60 -83 kW	**36-300013**	**36-199914**	with standard chassis; Heavy Duty Version .
B3	**2.0 16V** 11/02 - 99 kW		**36-199914**	with standard chassis

R

RENAULT				
RENAULT MEGANE II (BM0/1_, CM0/1_)				
B3	**1.9 dCi** 11/02 - 66 -96 kW	36-203284	**36-203307**	with standard chassis
B3	**1.9 dCi** 11/02 - 66 -96 kW	36-203291		with standard chassis; Heavy Duty Version .
B3	**2.0 dCi** 09/05 - 110 -127 kW	36-203291	**36-199914**	with standard chassis
B4	**1.4 16V, 1.5 dCi, 1.6 16V, 1.6 Flex-Fuel, 1.6 GL, 1.9 dCi, 2.0 16V, 2.0 16V Turbo, 2.0 dCi** 11/02 - 60 -127 kW	**22-132390**	**19-135113**	
B6 Sport	**1.4 16V, 1.5 dCi, 1.6 16V, 1.6 Flex-Fuel, 1.6 GL, 1.9 dCi, 2.0 16V, 2.0 16V Turbo, 2.0 dCi** 11/02 - 60 -127 kW	**22-102621**	**24-102636**	with standard chassis
B8	**1.4 16V, 1.5 dCi, 1.6 16V, 1.6 Flex-Fuel, 1.6 GL, 1.9 dCi, 2.0 16V, 2.0 16V Turbo, 2.0 dCi** 11/02 - 60 -127 kW	**22-102645**	**24-102650**	with sports suspension
RENAULT MEGANE II Saloon (LM0/1_)				
B1	**1.4, 1.5 dCi, 1.6, 1.6 16V, 1.6 Hi-Flex, 1.9 dCi, 2.0, 2.0 DCi Dynamic** 09/03 - 60 -110 kW	**12-224227**		VA: with ball bearing
B3	**1.4, 1.5 dCi, 1.6, 1.6 16V, 1.6 Hi-Flex** 09/03 - 60 -85 kW	36-300013	**36-203314**	with standard chassis; Heavy Duty Version .
B3	**1.9 dCi** 09/03 - 66 -96 kW	36-203284	**36-203314**	with standard chassis
B3	**1.9 dCi** 09/03 - 66 -96 kW	36-203291		with standard chassis; Heavy Duty Version .
B3	**2.0 DCi Dynamic** 09/05 - 110 kW	36-203291	**36-203314**	with standard chassis
B4	**1.4, 1.5 dCi, 1.6, 1.6 16V, 1.6 Hi-Flex, 1.9 dCi, 2.0, 2.0 DCi Dynamic** 09/03 - 60 -110 kW	**22-132390**	**19-135113**	
B6 Sport	**1.4, 1.5 dCi, 1.6, 1.6 16V, 1.6 Hi-Flex, 1.9 dCi, 2.0, 2.0 DCi Dynamic** 09/03 - 60 -110 kW	**22-102621**	**24-102636**	with standard chassis
B8	**1.4, 1.5 dCi, 1.6, 1.6 16V, 1.6 Hi-Flex, 1.9 dCi, 2.0, 2.0 DCi Dynamic** 09/03 - 60 -110 kW	**22-102645**	**24-102650**	with sports suspension
RENAULT MEGANE II Estate (KM0/1_)				
B1	**1.4, 1.5 dCi, 1.6, 1.6 16V, 1.6 Flex-Fuel, 1.9 dCi, 2.0, 2.0 dCi** 08/03 - 60 -110 kW	**12-224227**		VA: with ball bearing
B3	**1.4, 1.5 dCi, 1.6, 1.6 16V, 1.6 Flex-Fuel** 08/03 - 60 -83 kW	36-300013	**36-201389**	with standard chassis; Heavy Duty Version .
B3	**1.9 dCi** 08/03 - 66 -96 kW	36-203284	**36-201389**	with standard chassis
B3	**1.9 dCi** 08/03 - 66 -96 kW	36-203291		with standard chassis; Heavy Duty Version .

R

RENAULT				
RENAULT MEGANE II Estate (KM0/1_)				
B3	**2.0 dCi** 09/05 - 110 kW	36-203291	**36-201389**	with standard chassis
B4	**1.4, 1.5 dCi, 1.6, 1.6 16V, 1.6 Flex-Fuel, 1.9 dCi, 2.0, 2.0 dCi** 08/03 - 60 -110 kW	**22-132390**	**19-135113**	
B6 Sport	**1.4, 1.5 dCi, 1.6, 1.6 16V, 1.6 Flex-Fuel, 1.9 dCi, 2.0, 2.0 dCi** 08/03 - 60 -110 kW	**22-102621**	**24-102636**	with standard chassis
B8	**1.4, 1.5 dCi, 1.6, 1.6 16V, 1.6 Flex-Fuel, 1.9 dCi, 2.0, 2.0 dCi** 08/03 - 60 -110 kW	**22-102645**	**24-102650**	with sports suspension
RENAULT MEGANE II Coupé-Cabriolet (EM0/1_)				
B1	**1.5 dCi, 1.6, 1.6 16V, 1.6 Turbo Sport, 1.9 dCi, 2.0, 2.0 16V Turbo, 2.0 dCi** 05/04 - 63 -120 kW	**12-224227**		VA: with ball bearing
B3	**1.5 dCi, 1.6, 1.6 16V, 1.6 Turbo Sport** 09/03 - 63 -83 kW	36-300013	**36-203307**	with standard chassis
B3	**1.9 dCi, 2.0 dCi** 09/03 - 81 -110 kW	36-203321	**36-203307**	with standard chassis
B4	**1.5 dCi, 1.6, 1.6 16V, 1.6 Turbo Sport, 1.9 dCi, 2.0, 2.0 16V Turbo, 2.0 dCi** 05/04 - 63 -120 kW	**22-132390**	**19-135113**	
B6 Sport	**1.5 dCi, 1.6, 1.6 16V, 1.6 Turbo Sport, 1.9 dCi, 2.0, 2.0 16V Turbo, 2.0 dCi** 05/04 - 63 -120 kW	**22-102621**	**24-102636**	with standard chassis
B8	**1.5 dCi, 1.6, 1.6 16V, 1.6 Turbo Sport, 1.9 dCi, 2.0, 2.0 16V Turbo, 2.0 dCi** 05/04 - 63 -120 kW	**22-102645**	**24-102650**	with sports suspension
RENAULT MEGANE III Hatchback (BZ0_)				
B4	**1.4, 1.5 dCi, 1.6, 1.6 16V, 1.6 16V Bifuel, 1.9 dCi, 2.0, 2.0 dCi** 11/08 - 63 -132 kW	**22-193452**	**19-193465**	with standard chassis
B6 Sport	**1.4, 1.5 dCi, 1.6, 1.6 16V, 1.6 16V Bifuel, 1.9 dCi, 2.0, 2.0 dCi** 11/08 - 63 -132 kW	**35-166856**	**24-102636**	
RENAULT MEGANE III Coupe (DZ0/1_)				
B4	**1.4, 1.5 dCi, 1.6, 1.6 16V, 1.6 16V Bifuel, 1.9 dCi, 2.0, 2.0 16V, 2.0 dCi** 11/08 - 66 -132 kW	**22-193452**	**19-193465**	with standard chassis
B6 Sport	**1.4, 1.5 dCi, 1.6, 1.6 16V, 1.6 16V Bifuel, 1.9 dCi, 2.0, 2.0 16V, 2.0 dCi** 11/08 - 66 -132 kW	**35-166856**	**24-102636**	
RENAULT MODUS (F/JP0_)				
B1	**1.2, 1.2 16V, 1.2 16V Hi-Flex, 1.4, 1.5 dCi, 1.6** 12/04 - 48 -82 kW	**12-224364** **12-224357**		VA: with ball bearing
B3	**1.2, 1.2 16V, 1.2 16V Hi-Flex** 12/04 - 48 -74 kW	**36-148073**	**36-148097**	with standard chassis
B3	**1.2, 1.2 16V, 1.2 16V Hi-Flex** 12/04 - 48 -74 kW	**36-148080**		with standard chassis; Heavy Duty Version .

R

RENAULT				
RENAULT MODUS (F/JP0_)				
B3	**1.5 dCi, 1.6** 09/04 - 48 -82 kW	**36-148080**	**36-148097**	with standard chassis
B4	**1.2, 1.2 16V, 1.2 16V Hi-Flex, 1.4, 1.5 dCi, 1.6** 12/04 - 48 -82 kW	**22-167071**	**19-167084**	
RENAULT RAPID Box (F40_, G40_)				
B3	**1.6 D** 03/86 - 08/91 40 kW	**36-201785**		with standard chassis
B3	**1.6 D** 09/91 - 08/98 40 kW	**36-219537**		with standard chassis
B4	**1.0, 1.1, 1.2, 1.4, 1.4 CAT, 1.4 RN, 1.6 D, 1.9 D** 07/85 - 03/98 27 -59 kW		**19-019710**	VA: -> 10/96 HA: Not for increased payload
RENAULT SAFRANE I (B54_)				
B4	**2.0, 2.0 12V, 2.1 dT, 2.2, 2.5 dT, 3.0 V6** 04/92 - 07/96 65 -123 kW	**22-051202** **22-051196**	**22-051189**	without electronic suspension control; without ride height adjustment
RENAULT SAFRANE II (B54_)				
B4	**2.0 16V, 2.2 dT, 2.5 20V, 2.9 24V, 3.0 V6** 07/96 - 12/00 83 -140 kW	**22-051202** **22-051196**	**22-051189**	without electronic suspension control; without ride height adjustment
RENAULT SANDERO				
B4	**1.0 Hi-Flex, 1.4, 1.6, 1.6 Hi-Flex** 11/07 - 55 -79 kW	**22-166371**	**19-166384**	
RENAULT SCÉNIC I (JA0/1_)				
B3	**1.4 16V, 1.6, 1.6 16V, 1.8 16V, 1.9 dCi, 1.9 dTi, 2.0 16V, 2.0 16V IDE** 09/99 - 08/03 59 -103 kW	**36-130580**		with standard chassis
RENAULT SCÉNIC II (JM0/1_)				
B1	**1.4, 1.5 dCi, 1.6, 1.6 16V, 1.9 D, 1.9 dCi, 2.0, 2.0 16V Turbo, 2.0 dCi** 06/03 - 60 -120 kW	**12-224227**		VA: with ball bearing
B3	**1.4, 1.5 dCi, 1.6, 1.6 16V, 1.9 dCi, 2.0, 2.0 16V Turbo, 2.0 dCi** 06/03 - 60 -120 kW		**36-213016**	with standard chassis
B3	**1.6, 1.6 16V** 06/03 - 77 -83 kW	**36-213030**	**36-213016**	with standard chassis; with AC
B3	**1.5 dCi** 06/03 - 60 -78 kW	**36-201037**	**36-213016**	with standard chassis; with AC
B3	**1.9 dCi** 06/03 - 81 -96 kW	**36-213023**	**36-213016**	with standard chassis; with AC
B4	**1.4, 1.5 dCi, 1.6, 1.6 16V, 1.9 D, 1.9 dCi, 2.0, 2.0 16V Turbo, 2.0 dCi** 06/03 - 60 -120 kW	**22-158390**	**19-155876**	
B6 Sport	**1.4, 1.5 dCi, 1.6, 1.6 16V, 1.9 D, 1.9 dCi, 2.0, 2.0 16V Turbo, 2.0 dCi** 06/03 - 60 -120 kW	**22-106735**	**24-102636**	with standard chassis

R

RENAULT

RENAULT SCÉNIC II (JM0/1_)

B8	**1.4, 1.5 dCi, 1.6, 1.6 16V, 1.9 D, 1.9 dCi, 2.0, 2.0 16V Turbo, 2.0 dCi** 06/03 - 60 -120 kW	*22-106742*	**24-102650**	with sports suspension

RENAULT GRAND SCÉNIC II (JM0/1_)

B1	**1.5 dCi, 1.6, 1.9 dCi, 2.0, 2.0 dCi** 04/04 - 74 -120 kW	**12-224227**		VA: with ball bearing
B3	**1.6** 04/04 - 77 -83 kW	**36-213030**	**36-213245**	with standard chassis; with AC
B3	**2.0** 04/04 - 99 -120 kW	**36-201037**	**36-213245**	with standard chassis; with AC
B3	**1.5 dCi, 1.6, 1.9 dCi, 2.0, 2.0 dCi** 04/04 - 74 -120 kW		**36-213245**	with standard chassis
B3	**1.9 dCi** 04/04 - 81 -96 kW	**36-213023**	**36-213245**	with standard chassis; with AC
B4	**1.5 dCi, 1.6, 1.9 dCi, 2.0, 2.0 dCi** 04/04 - 74 -120 kW	**22-158390**	**19-155876**	
B6 Sport	**1.5 dCi, 1.6, 1.9 dCi, 2.0, 2.0 dCi** 04/04 - 74 -120 kW	**22-106735**	**24-102636**	with standard chassis
B8	**1.5 dCi, 1.6, 1.9 dCi, 2.0, 2.0 dCi** 04/04 - 74 -120 kW	*22-106742*	**24-102650**	with sports suspension

RENAULT SCÉNIC III (JZ0/1_)

B4	**1.4 16V, 1.5 dCi, 1.6 16V, 1.6 dCi, 1.6 E85, 1.9 dCi, 2.0 16V, 2.0 dCi** 02/09 - 63 -118 kW	**i.V.**	**19-155876**	with standard chassis

RENAULT SPORT SPIDER (EF0_)

MS	**2.0 16V** 03/95 - 10/99 110 kW	*24-021609*		mark: Race Spider

RENAULT TWINGO (C06_)

B1	**1.2, 1.2 16V** 03/93 - 40 -55 kW	**12-224203**		VA: with ball bearing
B3	**1.2, 1.2 16V** 03/93 - 40 -55 kW	**36-130535**	**36-130528**	with standard chassis
B4	**1.2** 03/93 - 40 -44 kW	**22-044792**	**19-028545**	VA: -> 08/00
B4	**1.2** 05/96 - 40 -43 kW	**22-156655** **22-156662**	**19-028545**	VA: 09/00 ->
B4	**1.2 16V** 01/01 - 44 -55 kW	**22-156655** **22-156662**	**19-028545**	
B6 Sport	**1.2** 03/93 - 09/99 40 -44 kW	**35-040606**	**24-019156**	

RENAULT TWINGO (CN0_)

B4	**1.2, 1.2 16V, 1.2 TCe 100, 1.2 Turbo, 1.5 dCi, 1.5 dCi 75, 1.5 dCi 90** 03/07 - 43 -75 kW	**22-171443**	**19-171456**	with standard chassis; For vehicles without stabilizer

RENAULT

RENAULT TWINGO (CN0_)

B14	**1.2, 1.2 16V, 1.2 TCe 100, 1.2 Turbo, 1.5 dCi, 1.5 dCi 75, 1.5 dCi 90** 03/07 - 43 -75 kW	**47-172586**		For vehicles without stabilizer; Conditions see certificates VA: lowering (expertise): 15-45 mm; axle load to: 810 kg HA: lowering (expertise): 25-45 mm; axle load to: 710 kg

RENAULT VEL SATIS (BJ0_)

B4	**2.0 16V Turbo, 2.2 dCi, 3.0 dCi, 3.5 V6** 06/02 - 102 -177 kW	**22-128188**	**19-168203**	

RENAULT 5 (122_)

B6 Sport	**1.4, 1.4 Alpine A5, 1.4 Alpine Turbo, 1.4 Turbo** 06/80 - 03/85 68 -118 kW	*24-009805*	*24-223706*	mark: Cup
B6 Sport	**1.4, 1.4 Alpine A5, 1.4 Alpine Turbo, 1.4 Turbo, 1.4 Turbo GT** 06/80 - 05/91 68 -118 kW	*35-221715*	**24-009942**	mark: Gruppe N GT Turbo

RENAULT SUPER 5 (B/C40_)

B3	**1.0, 1.1, 1.2, 1.4, 1.4 CAT** 10/84 - 12/96 30 -52 kW	**36-130511**		with standard chassis
B4	**1.0, 1.1, 1.2, 1.4, 1.4 CAT, 1.6 D** 10/84 - 05/88 30 -52 kW		**19-019710**	fixing bore at front straight one upon another
B4	**1.0, 1.1, 1.2, 1.4, 1.4 CAT, 1.6 D** 06/88 - 12/90 30 -52 kW		**19-019710**	fixing bore at front staggered one upon another
B4	**1.4 Turbo, 1.7, 1.7 i** 04/85 - 08/91 54 -88 kW		**19-019710**	fixing bore at front straight one upon another

RENAULT SUPER 5 Box (S40_)

B3	**1.1** 10/84 - 12/96 34 kW	**36-130511**		with standard chassis
B4	**1.0, 1.1, 1.2, 1.4, 1.6 D** 10/84 - 05/88 30 -85 kW		**19-019710**	fixing bore at front straight one upon another
B4	**1.0, 1.1, 1.2, 1.6 D** 06/88 - 12/96 30 -44 kW		**19-019710**	fixing bore at front staggered one upon another

RENAULT 9 (L42_)

B3	**1.1, 1.2, 1.4, 1.4 Automatik, 1.4 Turbo, 1.6 D, 1.7** 09/81 - 12/88 35 -85 kW	**36-160549**		with standard chassis
B4	**1.1, 1.2, 1.4, 1.4 Automatik, 1.4 Turbo, 1.6 D, 1.7** 09/81 - 12/88 35 -85 kW		*19-019406*	2 torsion bars
B4	**1.2, 1.4 Turbo, 1.7** 09/84 - 12/89 40 -85 kW		*19-019895*	4 torsion bars

RENAULT 11 (B/C37_)

B3	**1.1, 1.2, 1.4, 1.4 Turbo, 1.6 D, 1.7** 03/83 - 12/88 35 -85 kW	**36-160549**		with standard chassis
B4	**1.1, 1.2, 1.4, 1.4 Turbo, 1.6 D, 1.7** 03/83 - 12/88 35 -85 kW		*19-019406*	2 torsion bars
B4	**1.1, 1.2, 1.4, 1.4 Turbo, 1.6 D, 1.7** 03/83 - 12/88 35 -85 kW		*19-019895*	4 torsion bars

RENAULT				
RENAULT 11 Box (S37_)				
B4	**1.1, 1.2, 1.4, 1.6 D** 03/83 - 12/88 35 -50 kW		*19-019406*	2 torsion bars
B4	**1.1, 1.2, 1.4, 1.6 D** 03/83 - 12/88 35 -50 kW		*19-019895*	4 torsion bars
RENAULT 18 (134_)				
B3	**1.4, 1.6, 1.6 TS, 1.6 Turbo, 1.6 Turbo Inj., 2.0, 2.1 Diesel, 2.1 TD** 04/78 - 03/84 47 -92 kW	**36-159048**	**36-160471**	with standard chassis
B3	**1.4, 1.6, 1.6 TS, 2.0, 2.1 Diesel, 2.1 TD, 2.2 i** 04/84 - 11/93 47 -77 kW	**36-160518**	**36-160464**	with standard chassis
B3	**1.6 Turbo, 1.6 Turbo Inj.** 04/84 - 07/86 82 -92 kW	**36-160518**	**36-160464**	with standard chassis
B4	**1.4** CH-Nr. - 07/86 47 kW	*19-020112*		CH.Nr.: 552001 ->
B4	**1.6** CH-Nr. - 11/93 52 -58 kW	*19-020112*		CH.Nr.: 559401 ->
B4	**1.6 TS** CH-Nr. - 07/86 71 kW	*19-020112*		CH.Nr.: 20610 ->
B4	**1.6 Turbo, 1.6 Turbo Inj., 2.0, 2.2 i** 10/80 - 07/86 76 -92 kW	*19-020112*		
B4	**2.1 Diesel, 2.1 TD** CH-Nr. - 07/86 49 -65 kW	*19-020112*		CH.Nr.: 190906 ->
RENAULT 18 Variable (135_)				
B3	**1.4, 1.6, 1.6 TS, 2.0, 2.1 Diesel** 04/84 - 07/86 47 -77 kW	**36-160518**		with standard chassis
B4	**1.4** CH-Nr. - 07/86 47 kW	*19-020112*		CH.Nr.: 122601 ->
B4	**1.6, 1.6 Turbo, 2.0** 10/81 - 11/93 52 -92 kW	*19-020112*		
B4	**1.6** CH-Nr. - 07/86 54 -58 kW	*19-020112*		CH.Nr.: 118201 ->
B4	**1.6, 1.6 TS** CH-Nr. - 09/86 71 -82 kW	*19-020112*		CH.Nr.: 3930 ->
B4	**2.1 Diesel** CH-Nr. - 07/86 49 -53 kW	*19-020112*		CH.Nr.: 63220 ->
RENAULT 19 I (B/C53_)				
B2	**1.2, 1.4, 1.4 CAT, 1.7, 1.9 D** 01/88 - 12/92 40 -66 kW	**17-053334**	**15-069177**	2 torsion bars
B2	**1.4, 1.4 CAT, 1.7, 1.9 D** 01/88 - 12/92 43 -66 kW	**17-053334**	*15-107664*	4 torsion bars
B2	**1.8 16V** 06/89 - 04/92 99 kW		**15-069177**	2 torsion bars
B2	**1.8 16V** 06/89 - 04/92 99 kW		*15-107664*	4 torsion bars

R

RENAULT

RENAULT 19 I (B/C53_)

B3	**1.2, 1.4, 1.4 CAT, 1.7, 1.9 D** 01/88 - 12/92 40 -66 kW	**36-130504**		with standard chassis
B4	**1.2, 1.4, 1.4 CAT, 1.7, 1.9 D** 01/88 - 12/92 40 -66 kW	*22-041081*	**19-019901**	2 torsion bars
B4	**1.4, 1.4 CAT, 1.7, 1.9 D** 01/88 - 12/92 43 -66 kW	*22-041081*	**19-065861**	4 torsion bars
B4	**1.8 16V** 06/89 - 04/92 99 kW		**19-019901**	2 torsion bars
B4	**1.8 16V** 06/89 - 04/92 99 kW		**19-065861**	4 torsion bars
B6 Sport	**1.2, 1.4, 1.4 CAT, 1.7, 1.9 D, 1.9 DT** 01/88 - 12/92 40 -79 kW	**35-004004**	**24-017183**	2 torsion bars
B6 Sport	**1.2, 1.4, 1.4 CAT, 1.7, 1.9 D, 1.9 DT** 01/88 - 12/92 40 -79 kW	**35-004004**	**24-016025**	4 torsion bars
B6 Sport	**1.8 16V** 06/89 - 04/92 99 kW	**35-040163**	**24-016025**	4 torsion bars
B8	**1.2, 1.4, 1.4 CAT, 1.7, 1.9 D, 1.9 DT** 01/88 - 12/92 40 -79 kW	**22-040251**	**24-017176**	2 torsion bars
B8	**1.2, 1.4, 1.4 CAT, 1.7, 1.9 D, 1.9 DT** 01/88 - 12/92 40 -79 kW	**22-040251**	**24-017015**	4 torsion bars
B8	**1.8 16V** 06/89 - 04/92 99 kW	**35-040163**	**24-017015**	4 torsion bars

RENAULT 19 I Chamade (L53_)

B2	**1.1 TR, 1.2, 1.4, 1.7, 1.9 D, 1.9 DT, 1.9 TD** 01/88 - 12/92 35 -79 kW	**17-053334**	**15-069177**	2 torsion bars
B2	**1.1 TR, 1.2, 1.4, 1.7, 1.9 D, 1.9 DT, 1.9 TD** 01/88 - 12/92 35 -79 kW	**17-053334**	*15-107664*	4 torsion bars
B2	**1.8 16V** 10/89 - 04/92 99 kW		*15-107664*	4 torsion bars
B3	**1.1 TR, 1.2, 1.4, 1.7, 1.9 D, 1.9 DT, 1.9 TD** 01/88 - 12/92 35 -79 kW	**36-130504**		with standard chassis
B4	**1.1 TR, 1.2, 1.4, 1.7, 1.9 D, 1.9 DT, 1.9 TD** 01/88 - 12/92 35 -79 kW	*22-041081*	**19-019901**	2 torsion bars
B4	**1.4, 1.7, 1.9 D, 1.9 DT, 1.9 TD** 07/88 - 12/92 43 -79 kW	*22-041081*	**19-065861**	4 torsion bars
B4	**1.8 16V** 10/89 - 04/92 99 kW		**19-065861**	4 torsion bars
B6 Sport	**1.1 TR, 1.2, 1.4, 1.7, 1.9 D, 1.9 DT, 1.9 TD** 01/88 - 12/92 35 -79 kW	**35-004004**	**24-017183**	2 torsion bars
B6 Sport	**1.1 TR, 1.2, 1.4, 1.7, 1.9 D, 1.9 DT, 1.9 TD** 01/88 - 12/92 35 -79 kW	**35-004004**	**24-016025**	4 torsion bars
B6 Sport	**1.8 16V** 10/89 - 04/92 99 kW	**35-040163**	**24-016025**	4 torsion bars

RENAULT				
RENAULT 19 I Chamade (L53_)				
B8	**1.1 TR, 1.2, 1.4, 1.7, 1.9 D, 1.9 DT, 1.9 TD** 01/88 - 12/92 35 -79 kW	**22-040251**	**24-017176**	2 torsion bars
B8	**1.1 TR, 1.2, 1.4, 1.7, 1.9 D, 1.9 DT, 1.9 TD** 01/88 - 12/92 35 -79 kW	**22-040251**	**24-017015**	4 torsion bars
B8	**1.8 16V** 10/89 - 04/92 99 kW	**35-040163**	**24-017015**	4 torsion bars
RENAULT 19 I Cabriolet (D53_)				
B2	**1.7** 07/91 - 04/92 55 -70 kW	**17-053334**	*15-107664*	
B2	**1.8 16V** 07/91 - 04/92 101 kW		*15-107664*	
B3	**1.7** 07/91 - 04/92 55 -70 kW	**36-130504**		with standard chassis
B4	**1.7** 07/91 - 04/92 55 -70 kW	*22-041081*	**19-065861**	
B4	**1.8 16V** 07/91 - 04/92 101 kW		**19-065861**	
B6 Sport	**1.7** 07/91 - 04/92 55 -70 kW	**35-004004**	**24-017183**	2 torsion bars
B6 Sport	**1.7** 07/91 - 04/92 55 -70 kW	**35-004004**	**24-016025**	4 torsion bars
B6 Sport	**1.8 16V** 07/91 - 04/92 101 kW	**35-040163**	**24-016025**	4 torsion bars
B8	**1.7** 07/91 - 04/92 55 -70 kW	**22-040251**	**24-017176**	2 torsion bars
B8	**1.7** 07/91 - 04/92 55 -70 kW	**22-040251**	**24-017015**	4 torsion bars
B8	**1.8 16V** 07/91 - 04/92 101 kW	**35-040163**	**24-017015**	4 torsion bars
RENAULT 19 II (B/C53_)				
B2	**1.2, 1.4, 1.7, 1.8, 1.9 D, 1.9 dT** 04/92 - 12/95 40 -81 kW	**17-053334**	**15-069177**	2 torsion bars
B2	**1.4, 1.7, 1.8, 1.9 D, 1.9 dT** 01/92 - 12/95 43 -81 kW	**17-053334**	*15-107664*	4 torsion bars
B2	**1.8 16V** 04/92 - 12/95 99 kW		**15-069177**	2 torsion bars
B2	**1.8 16V** 04/92 - 12/95 99 kW		*15-107664*	4 torsion bars
B3	**1.2, 1.4, 1.7, 1.8, 1.9 D, 1.9 dT** 04/92 - 12/95 40 -81 kW	**36-130504**		with standard chassis
B4	**1.2, 1.4, 1.7, 1.8, 1.9 D, 1.9 dT** 04/92 - 12/95 40 -81 kW	*22-041081*	**19-019901**	2 torsion bars
B4	**1.4, 1.7, 1.8, 1.9 D, 1.9 dT** 01/92 - 12/95 43 -81 kW	*22-041081*	**19-065861**	4 torsion bars

R

RENAULT

RENAULT 19 II (B/C53_)

B4	**1.8 16V** 04/92 - 12/95 99 kW		**19-019901**	2 torsion bars
B4	**1.8 16V** 04/92 - 12/95 99 kW		**19-065861**	4 torsion bars
B6 Sport	**1.2, 1.4, 1.7, 1.8, 1.9 D, 1.9 dT** 04/92 - 12/95 40 -81 kW	**35-004004**	**24-017183**	2 torsion bars
B6 Sport	**1.2, 1.4, 1.7, 1.8, 1.9 D, 1.9 dT** 04/92 - 12/95 40 -81 kW	**35-004004**	**24-016025**	4 torsion bars
B6 Sport	**1.8 16V** 04/92 - 12/95 99 kW	**35-040163**	**24-016025**	4 torsion bars
B8	**1.2, 1.4, 1.7, 1.8, 1.9 D, 1.9 dT** 04/92 - 12/95 40 -81 kW	**22-040251**	**24-017176**	2 torsion bars
B8	**1.2, 1.4, 1.7, 1.8, 1.9 D, 1.9 dT** 04/92 - 12/95 40 -81 kW	**22-040251**	**24-017015**	4 torsion bars
B8	**1.8 16V** 04/92 - 12/95 99 kW	**35-040163**	**24-017015**	4 torsion bars

RENAULT 19 II Chamade (L53_)

B2	**1.2, 1.4, 1.7, 1.8, 1.9 D, 1.9 dT** 04/92 - 12/95 43 -81 kW	**17-053334**	**15-069177**	2 torsion bars
B2	**1.2, 1.4, 1.7, 1.8, 1.9 D, 1.9 dT** 04/92 - 12/95 43 -81 kW	**17-053334**	*15-107664*	4 torsion bars
B2	**1.8 16V** 04/92 - 12/95 99 kW		**15-069177**	2 torsion bars
B2	**1.8 16V** 04/92 - 12/95 99 kW		*15-107664*	4 torsion bars
B3	**1.2, 1.4, 1.7, 1.8, 1.9 D, 1.9 dT** 04/92 - 12/95 44 -81 kW	**36-130504**		with standard chassis
B4	**1.2, 1.4, 1.7, 1.8, 1.9 D, 1.9 dT** 04/92 - 12/95 43 -81 kW	*22-041081*	**19-019901**	2 torsion bars
B4	**1.2, 1.4, 1.7, 1.8, 1.9 D, 1.9 dT** 04/92 - 12/95 43 -81 kW	*22-041081*	**19-065861**	4 torsion bars
B4	**1.8 16V** 04/92 - 12/95 99 kW		**19-019901**	2 torsion bars
B4	**1.8 16V** 04/92 - 12/95 99 kW		**19-065861**	4 torsion bars
B6 Sport	**1.2** 05/92 - 09/94 44 kW	**35-004004**	**24-017183**	2 torsion bars
B6 Sport	**1.2** 05/92 - 09/94 44 kW	**35-004004**	**24-016025**	4 torsion bars
B8	**1.2** 05/92 - 09/94 44 kW	**22-040251**	**24-017176**	2 torsion bars
B8	**1.2** 05/92 - 09/94 44 kW	**22-040251**	**24-017015**	4 torsion bars

RENAULT				
RENAULT 19 II Cabriolet (D53_, 853_)				
B2	**1.7, 1.8** 04/92 - 06/96 65 -79 kW	**17-053334**	*15-107664*	4 torsion bars
B2	**1.8 16V** 04/92 - 06/96 99 kW		*15-107664*	4 torsion bars
B3	**1.7, 1.8** 04/92 - 06/96 65 -79 kW	**36-130504**		with standard chassis
B4	**1.7, 1.8** 04/92 - 06/96 65 -79 kW	*22-041081*	**19-065861**	4 torsion bars
B4	**1.8 16V** 04/92 - 06/96 99 kW		**19-065861**	4 torsion bars
B6 Sport	**1.7, 1.8** 04/92 - 06/96 65 -79 kW	**35-004004**	**24-017183**	2 torsion bars
B6 Sport	**1.7, 1.8** 04/92 - 06/96 65 -79 kW	**35-004004**	**24-016025**	4 torsion bars
B6 Sport	**1.8 16V** 04/92 - 06/96 99 kW	**35-040163**	**24-016025**	4 torsion bars
B8	**1.7, 1.8** 04/92 - 06/96 65 -79 kW	**22-040251**	**24-017176**	2 torsion bars
B8	**1.7, 1.8** 04/92 - 06/96 65 -79 kW	**22-040251**	**24-017015**	4 torsion bars
B8	**1.8 16V** 04/92 - 06/96 99 kW	**35-040163**	**24-017015**	4 torsion bars
RENAULT 21 (B48_)				
B3	**1.4, 1.7, 1.9 D, 2.0, 2.1 D, 2.1 Turbo-D, 2.2** 07/89 - 06/94 47 -99 kW	**36-160501**		with standard chassis
B4	**1.4, 1.7, 1.9 D, 2.0, 2.0 TXi, 2.1 D, 2.1 Turbo-D, 2.2** 07/89 - 06/94 47 -100 kW		**19-029375**	
RENAULT 21 Saloon (L48_)				
B3	**1.4, 1.7, 1.9 D, 2.0, 2.1 D, 2.1 TD, 2.1 Turbo-D, 2.2** 04/86 - 02/94 47 -99 kW	**36-160501**		with standard chassis
B3	**2.0 Turbo** 04/87 - 10/92 119 -129 kW	**36-160495**		with standard chassis
B4	**1.4, 1.7, 1.9 D, 2.0, 2.0 Turbo, 2.1 D, 2.1 TD, 2.1 Turbo-D, 2.2** 04/86 - 02/94 47 -129 kW		**19-029375**	
RENAULT 25 (B29_)				
B3	**2.0, 2.0 12V, 2.1 Diesel, 2.1 Turbo-D, 2.2, 2.7 V6 Injection, 2.8 V6, 2.8 V6 Injection** 04/84 - 12/93 46 -115 kW	**36-160488**	**36-154722**	with standard chassis
B3	**2.4 V6 Turbo, 2.5 V6 Turbo** 10/84 - 12/92 133 -151 kW		**36-154722**	with standard chassis

R

RENAULT				
RENAULT 25 (B29_)				
B4	**2.0, 2.0 12V, 2.1 Diesel, 2.1 Turbo-D, 2.2, 2.4 V6 Turbo, 2.5 V6 Turbo, 2.7 V6 Injection, 2.8 V6, 2.8 V6 Injection** 04/84 - 12/93 46 -151 kW	*19-020181*		
RENAULT TRAFIC II Bus (JL)				
B1	**1.9 DCi, 2.0, 2.0 16V, 2.0 dCi 115, 2.0 dCi 90, 2.5 dCi 135, 2.5 dCi 145, 2.5 DTi, dCI 100, dCI 80** 03/01 - 59 -107 kW	**12-224210**		VA: with ball bearing
B3	**1.9 DCi, 2.0, 2.0 16V, 2.0 dCi 115, 2.0 dCi 90, 2.5 dCi 115, 2.5 dCi 135, 2.5 dCi 145, 2.5 DTi, dCI 100, dCI 80** 03/01 - 59 -107 kW	**36-199488**	**36-198078**	with standard chassis
B4	**2.0 16V, 2.0 dCi 115, 2.0 dCi 90, 2.5 dCi 135, 2.5 dCi 145, 2.5 DTi** 03/03 - 66 -107 kW		**19-152615** OIO	
B4	**1.9 DCi, 2.0, dCI 100, dCI 80** 09/01 - 59 -88 kW		**19-152615** OIO	
RENAULT TRAFIC II Box (FL)				
B1	**1.9 DCi, 1.9 dCi 100, 1.9 dCi 80, 2.0, 2.0 16V, 2.0 dCi 115, 2.0 dCi 90, 2.5 dCi 135, 2.5 dCi 145, 2.5 DTi** 03/01 - 59 -107 kW	**12-224210**		VA: with ball bearing
B3	**1.9 DCi, 1.9 dCi 100, 1.9 dCi 80, 2.0, 2.0 16V, 2.0 dCi 115, 2.0 dCi 90, 2.5 dCi 135, 2.5 dCi 145, 2.5 DTi** 03/01 - 59 -107 kW	**36-199488**	**36-198078**	with standard chassis
B4	**1.9 DCi, 2.0 16V, 2.0 dCi 115, 2.0 dCi 90, 2.5 dCi 135, 2.5 dCi 145, 2.5 DTi** 04/01 - 59 -107 kW		**19-152615** OIO	
B4	**1.9 dCi 100, 1.9 dCi 80, 2.0** 09/01 - 60 -88 kW		**19-152615** OIO	
RENAULT TRAFIC II Flatbed / Chassis (EL)				
B3	**1.9 DCi, 1.9 dCi 100, 1.9 dCi 80, 2.0, 2.0 dCi 115, 2.0 dCi 90, 2.5 Dci, 2.5 dCi 135, 2.5 dCi 145** 03/01 - 59 -107 kW	**36-199488**	**36-198078**	with standard chassis
B4	**1.9 DCi, 1.9 dCi 100, 1.9 dCi 80, 2.0, 2.0 dCi 115, 2.0 dCi 90, 2.5 Dci, 2.5 dCi 135, 2.5 dCi 145** 03/01 - 59 -107 kW		**19-152615** OIO	
RENAULT MASTER II Bus (JD/ND)				
B4	**1.9 dCi 80, 1.9 dTI, 2.2 dCI 90, 2.5 D, 2.5 dCi 120, 2.8 dTI** 07/98 - 59 -84 kW	**19-132792** OIO	**19-131689** OIO	with standard chassis
B4	**2.5 dCi, 2.5 dCi 100, 3.0 dCi 140** 10/03 - 73 -107 kW	**19-132792** OIO	**19-131702** OIO	with standard chassis
RENAULT MASTER II Box (FD)				
B4	**1.9 dCi 80, 1.9 dTI, 2.2 dCI 90, 2.5 D, 2.5 dCi 120, 2.8 dTI** 07/98 - 59 -84 kW	**19-132792** OIO	**19-131689** OIO	with standard chassis

R

RENAULT				
RENAULT MASTER II Box (FD)				
B4	**2.5 dCi, 2.5 dCi 100, 3.0 dCi 120, 3.0 dCi 140, 3.0 dCi 160** 06/05 - 73 -115 kW	**19-132792** OIO	**19-131702** OIO	with standard chassis
RENAULT MASTER II Flatbed / Chassis (ED/HD/UD)				
B4	**2.2 dCI 90, 2.5 D, 2.5 dCi 120, 2.8 dTI** 07/98 - 59 -84 kW	**19-132792** OIO	**19-131702** OIO	with standard chassis
B4	**2.5 dCi, 2.5 dCi 100, 3.0 dCi 120, 3.0 dCi 140, 3.0 dCi 160** 06/05 - 73 -115 kW	**19-132792** OIO	**19-131702** OIO	with standard chassis
ROVER				
ROVER 45 (RT)				
B4	**1.4, 1.6, 1.8, 2.0 iDT, 2.0 V6** 02/00 - 74 -110 kW	*19-062945* HL ↰ *19-062952* HL ↱	*19-063225* HL	
ROVER 45 Saloon (RT)				
B4	**1.4, 1.6, 1.8, 2.0 iDT, 2.0 V6** 02/00 - 74 -110 kW	*19-062945* HL ↰ *19-062952* HL ↱	*19-063225* HL	
ROVER 75 (RJ)				
B4	**1.8, 1.8 Turbo, 2.0 CDT, 2.0 CDTi, 2.0 V6, 2.5 V6** 02/99 - 85 -130 kW		**19-214658** HL	
ROVER 200 (XH)				
B4	**213 S, 216, 216 Vitesse** 03/85 - 09/89 54 -75 kW	*22-041258* ↰ *22-041265* ↱		
ROVER 200 Coupe (XW)				
B4	**216, 220 GSi, 220 Turbo** 10/92 - 02/96 90 -147 kW	*22-047304* ↰ *22-047311* ↱	*19-063225* HL	-> CH.Nr.: 911247
ROVER 200 (RF)				
B3	**214 i, 214 Si** 11/95 - 03/00 55 -76 kW	**36-160792**	**36-160723**	with standard chassis
B3	**216 Si, 220 D/SD** 11/95 - 03/00 63 -82 kW	**36-160747**	**36-160723**	with standard chassis
ROVER 400 Hatchback (RT)				
B3	**414 Si, 416 Si** 05/95 - 03/00 76 -83 kW	**36-163366**	**36-163342**	with standard chassis
B3	**420 D, 420 Di, 420 Si Lux** 05/95 - 03/00 63 -100 kW	**36-163359**	**36-163342**	with standard chassis
B4	**414 Si, 416 Si, 420 D, 420 Di, 420 Si Lux** 05/95 - 03/00 63 -100 kW		*19-063225* HL	
B6 Sport	**414 Si, 416 Si, 420 D, 420 Di, 420 Si Lux** 05/95 - 03/00 63 -100 kW	**24-060554** HL ↰ **24-060561** HL ↱	**24-060417** HL	
B8	**414 Si, 416 Si, 420 D, 420 Di, 420 Si Lux** 05/95 - 03/00 63 -100 kW	**24-016032** HL ↰ **24-016049** HL ↱	**24-060424** HL	

R

ROVER				
ROVER 400 (RT)				
B3	**414 Si, 416 Si** 05/95 - 03/00 76 -83 kW	**36-163366**	**36-163342**	with standard chassis
B3	**420 D, 420 Di, 420 Si Lux** 05/95 - 03/00 63 -100 kW	**36-163359**	**36-163342**	with standard chassis
B4	**414 Si, 416 Si, 420 D, 420 Di, 420 Si Lux** 05/95 - 03/00 63 -100 kW		*19-063225* HL	
B6 Sport	**414 Si, 416 Si, 420 D, 420 Di, 420 Si Lux** 05/95 - 03/00 63 -100 kW	**24-060554** HL ↰ **24-060561** HL ↱	**24-060417** HL	
B8	**414 Si, 416 Si, 420 D, 420 Di, 420 Si Lux** 05/95 - 03/00 63 -100 kW	**24-016032** HL ↰ **24-016049** HL ↱	**24-060424** HL	
ROVER 600 (RH)				
B4	**618 i/Si, 620 i, 620 Sdi, 620 Si, 620 Ti Vitesse, 623 Si** 08/93 - 02/99 77 -147 kW	*19-062853* HL ↰ *19-062860* HL ↱	**19-028811** HL	
B6 Sport	**618 i/Si, 620 i, 620 Sdi, 620 Si, 620 Ti Vitesse, 623 Si** 08/93 - 02/99 77 -147 kW	**24-017213** HL ↰ **24-017220** HL ↱	**24-017237** HL	
B8	**618 i/Si, 620 i, 620 Sdi, 620 Si, 620 Ti Vitesse, 623 Si** 08/93 - 02/99 77 -147 kW	**24-016087** HL ↰ **24-016094** HL ↱	**24-016063** HL	
ROVER MINI MK I				
B6 Sport	**1.3 Cooper S, 1000, 1300** 01/92 - 30 -63 kW	**24-181464** OO	**24-181471** O	
ROVER MINI MK I Convertible (XN)				
B6 Sport	**1.3, 1.3 S, 1300** 09/92 - 05/01 46 -63 kW	**24-181464** OO	**24-181471** O	
SAAB				
SAAB 9-3 (YS3D)				
B4	**2.0 i, 2.0 SE Turbo, 2.0 Turbo, 2.2 TiD, 2.3, 2.3 i, 2.3 Turbo** 02/98 - 09/02 85 -169 kW	i.V.	**19-193359** O	with standard chassis
B6 Sport	**2.0 i, 2.0 SE Turbo, 2.0 Turbo, 2.2 TiD, 2.3, 2.3 i, 2.3 Turbo** 02/98 - 09/02 85 -169 kW	**34-031049**	**24-027571** O	
B8	**2.0 i, 2.0 SE Turbo, 2.0 Turbo, 2.2 TiD, 2.3, 2.3 i, 2.3 Turbo** 02/98 - 09/02 85 -169 kW	**34-031056**	**24-027588** O	
SAAB 9-3 Cabriolet (YS3D)				
B6 Sport	**2.0 i, 2.0 SE Turbo, 2.0 Turbo, 2.3 i, 2.3 Turbo** 02/98 - 08/03 96 -165 kW	**34-031049**	**24-027571** O	
B8	**2.0 i, 2.0 SE Turbo, 2.0 Turbo, 2.3 i, 2.3 Turbo** 02/98 - 08/03 96 -165 kW	**34-031056**	**24-027588** O	

R
S

SAAB				
SAAB 9-3 (YS3F)				
B1	**1.8 i, 1.8 t, 1.8 t BioPower, 1.9 TiD, 1.9 TTiD, 2.0 t, 2.0 t Bio Power, 2.0 t BioPower, 2.0 Turbo Performance, 2.2 TiD, 2.8 Turbo V6** 09/02 - 88 -203 kW	**12-224272**		VA: with ball bearing
B4	**1.8 i, 1.8 t, 1.8 t BioPower, 1.9 TiD, 1.9 TTiD, 2.0 t, 2.0 t Bio Power, 2.0 t BioPower, 2.0 Turbo Performance, 2.2 TiD, 2.8 Turbo V6** 09/02 - 88 -203 kW	**22-140067** **22-140074**	**19-140087**	with standard chassis
B6 Sport	**1.8 i, 1.8 t, 1.8 t BioPower, 1.9 TiD, 1.9 TTiD, 2.0 t, 2.0 t Bio Power, 2.0 t BioPower, 2.0 Turbo Performance, 2.2 TiD, 2.8 Turbo V6** 09/02 - 88 -203 kW	**35-102502** **35-102519**	**24-102520**	with standard chassis
B8	**1.8 i, 1.8 t, 1.8 t BioPower, 1.9 TiD, 1.9 TTiD, 2.0 t, 2.0 t Bio Power, 2.0 t BioPower, 2.0 Turbo Performance, 2.2 TiD, 2.8 Turbo V6** 09/02 - 88 -203 kW	**35-102533** **35-102540**	**24-102551**	with sports suspension
SAAB 9-3 Convertible (YS3F)				
B1	**1.8 t, 1.8 t BioPower, 1.9 TiD, 1.9 TTiD, 2.0, 2.0 t, 2.0 t BioPower, 2.0 Turbo Performance, 2.8 Turbo, 2.8 Turbo V6** 08/03 - 96 -206 kW	**12-224272**		VA: with ball bearing
B4	**1.8 t, 1.8 t BioPower, 1.9 TiD, 1.9 TTiD, 2.0, 2.0 t, 2.0 t BioPower, 2.0 Turbo Performance, 2.8 Turbo, 2.8 Turbo V6** 08/03 - 96 -206 kW	**22-140067** **22-140074**	**19-140087**	with standard chassis; with sports suspension
B6 Sport	**1.8 t, 1.8 t BioPower, 1.9 TiD, 1.9 TTiD, 2.0, 2.0 t, 2.0 t BioPower, 2.0 Turbo Performance, 2.8 Turbo, 2.8 Turbo V6** 08/03 - 96 -206 kW	**35-102502** **35-102519**	**24-102520**	with standard chassis
B8	**1.8 t, 1.8 t BioPower, 1.9 TiD, 1.9 TTiD, 2.0, 2.0 t, 2.0 t BioPower, 2.0 Turbo Performance, 2.8 Turbo, 2.8 Turbo V6** 08/03 - 96 -206 kW	**35-102533** **35-102540**	**24-102551**	with sports suspension
SAAB 9-3 Estate				
B1	**1.8 i, 1.8 t, 1.8 t BioPower, 1.9 TiD, 1.9 TTiD, 2.0, 2.0 1,8 t BioPower, 2.0 t, 2.0 T Bio Power, 2.0 t BioPower, 2.8 Turbo V6** 03/05 - 88 -203 kW	**12-224272**		VA: with ball bearing
B4	**1.8 i, 1.8 t, 1.8 t BioPower, 1.9 TiD, 1.9 TTiD, 2.0, 2.0 1,8 t BioPower, 2.0 t, 2.0 T Bio Power, 2.0 t BioPower, 2.8 Turbo V6** 03/05 - 88 -203 kW	**22-140067** **22-140074**	**19-140087**	with standard chassis
B6 Sport	**1.8 i, 1.8 t, 1.8 t BioPower, 1.9 TiD, 1.9 TTiD, 2.0, 2.0 1,8 t BioPower, 2.0 t, 2.0 T Bio Power, 2.0 t BioPower, 2.8 Turbo V6** 03/05 - 88 -203 kW	**35-102502** **35-102519**	**24-102520**	with standard chassis

S

SAAB				
SAAB 9-3 Estate				
B8	**1.8 i, 1.8 t, 1.8 t BioPower, 1.9 TiD, 1.9 TTiD, 2.0, 2.0 1,8 t BioPower, 2.0 t, 2.0 T Bio Power, 2.0 t BioPower, 2.8 Turbo V6** 03/05 - 88 -203 kW	**35-102533** **35-102540**	**24-102551**	with sports suspension
SAAB 9-5 (YS3E)				
B4	**2.0 t, 2.0 Turbo SE, 2.3 t, 2.3 Turbo, 3.0 TiD, 3.0 V6t** 09/97 - 08/01 110 -169 kW	**22-147073**	**19-147093**	-> CH.Nr.: YSES55CD1; with standard chassis
B4	**2.0 t, 2.3 t, 2.3 Turbo, 3.0 TiD, 3.0 V6t** 09/01 - 110 -184 kW	**22-147080**	**19-147093**	CH.Nr.: YSES55CD2 ->; with standard chassis
B4	**1.9 TiD, 2.0, 2.0 T, 2.0 t BioPower, 2.2 TiD, 2.3, 2.3 t BioPower, 2.3 Turbo** 11/05 - 88 -224 kW	**22-147080**	**19-147093**	with standard chassis
B6 Sport	**2.0 t, 2.0 Turbo SE, 2.3 t, 2.3 Turbo, 3.0 TiD, 3.0 V6t** 09/97 - 08/01 110 -169 kW	**35-043713**	**24-027083**	-> CH.Nr.: YS3ES55CD1
B6 Sport	**2.0 t, 2.3 t, 2.3 Turbo, 3.0 TiD, 3.0 V6t** 09/01 - 110 -184 kW	**35-051688**	**24-027083**	CH.Nr.: YS3ES55CD2 ->
B6 Sport	**1.9 TiD, 2.0, 2.0 T, 2.0 t BioPower, 2.2 TiD, 2.3, 2.3 t BioPower, 2.3 Turbo** 11/05 - 88 -224 kW	**35-051688**	**24-027083**	
B8	**2.0 t, 2.0 Turbo SE, 2.3 t, 2.3 Turbo, 3.0 TiD, 3.0 V6t** 09/97 - 08/01 110 -169 kW	**35-043881**	**24-027090**	-> CH.Nr.: YS3ES55CD1
B8	**2.0 t, 2.3 t, 2.3 Turbo, 3.0 TiD, 3.0 V6t** 09/01 - 110 -184 kW	**35-051695**	**24-027090**	CH.Nr.: YS3ES55CD2 ->
B8	**1.9 TiD, 2.0, 2.0 T, 2.0 t BioPower, 2.2 TiD, 2.3, 2.3 t BioPower, 2.3 Turbo** 11/05 - 88 -224 kW	**35-051695**	**24-027090**	
B12 PK	**2.0 t, 2.3 t, 2.3 Turbo, 3.0 TiD, 3.0 V6t** 09/01 - 110 -184 kW	**46-194381**		CH.Nr.: YS3ES55CD2 ->; Conditions see certificates VA: lowering (expertise): 30 mm; axle load to: 1175 kg HA: lowering (expertise): 30 mm; axle load to: 1050 kg
B12 PK	**2.0, 2.0 t, 2.0 Turbo SE, 2.3 t, 2.3 Turbo, 3.0 TiD, 3.0 V6t** 01/98 - 08/01 110 -169 kW	**46-194374**		-> CH.Nr.: YS3ES55CD1; Conditions see certificates VA: lowering (expertise): 30 mm; axle load to: 1175 kg HA: lowering (expertise): 30 mm; axle load to: 1050 kg
B12 PK	**1.9 TiD, 2.0, 2.0 T, 2.0 t BioPower, 2.2 TiD, 2.3, 2.3 t BioPower, 2.3 Turbo** 11/05 - 88 -224 kW	**46-194381**		Conditions see certificates VA: lowering (expertise): 30 mm; axle load to: 1175 kg HA: lowering (expertise): 30 mm; axle load to: 1050 kg
SAAB 9-5 Estate (YS3E)				
B4	**2.0 t, 2.3 t, 2.3 Turbo, 3.0 TiD, 3.0 V6t** 10/98 - 08/01 110 -169 kW	**22-147073**		-> CH.Nr.: YSEES55CD1; fixing hole pitches at the front 58 mm; with standard chassis
B4	**2.0 t, 2.0 t BioPower, 2.3, 2.3 t, 2.3 t BioPower, 2.3 Turbo, 3.0 TiD, 3.0 V6t** 09/01 - 110 -224 kW	**22-147080**	**19-147093**	CH.Nr.: YS3ES55CD2 ->; fixing hole pitches at the front 75 mm; with standard chassis
B4	**1.9 TiD, 2.2 TiD, 2.3 Turbo** 09/01 - 88 -184 kW	**22-147080**	**19-147093**	fixing hole pitches at the front 75 mm; with standard chassis
B6 Sport	**2.0 t, 2.3 t, 2.3 Turbo, 3.0 TiD, 3.0 V6t** 10/98 - 08/01 110 -169 kW	**35-043713**	**24-027083**	-> CH.Nr.: YS3ES55CD1_; fixing hole pitches at the front 58 mm
B6 Sport	**2.0 t, 2.0 t BioPower, 2.3, 2.3 t, 2.3 t BioPower, 2.3 Turbo, 3.0 TiD, 3.0 V6t** 09/01 - 110 -224 kW	**35-051688**	**24-027083**	CH.Nr.: YS3ES55CD2_ ->; fixing hole pitches at the front 75 mm

S

SAAB				
SAAB 9-5 Estate (YS3E)				
B6 Sport	**1.9 TiD, 2.2 TiD, 2.3 Turbo** 09/01 - 88 -184 kW	**35-051688**	**24-027083**	fixing hole pitches at the front 75 mm
B8	**2.0 t, 2.3 t, 2.3 Turbo, 3.0 TiD, 3.0 V6t** 10/98 - 08/01 110 -169 kW	**35-043881**	**24-027090**	-> CH.Nr.: - YS3ES55CD1; fixing hole pitches at the front 58 mm
B8	**2.0 t, 2.0 t BioPower, 2.3, 2.3 t, 2.3 t BioPower, 2.3 Turbo, 3.0 TiD, 3.0 V6t** 09/01 - 110 -224 kW	**35-051695**	**24-027090**	CH.Nr.: YS3ES55CD2 ->; fixing hole pitches at the front 75 mm
B8	**1.9 TiD, 2.2 TiD, 2.3 Turbo** 09/01 - 88 -184 kW	**35-051695**	**24-027090**	fixing hole pitches at the front 75 mm
B12 PK	**2.0 t, 2.3 t, 2.3 Turbo, 3.0 TiD, 3.0 V6t** 10/98 - 08/01 110 -169 kW	**46-194398**		-> CH.Nr.: YS3ES55CD1; Conditions see certificates VA: lowering (expertise): 30 mm; axle load to: 1175 kg HA: lowering (expertise): 30 mm; axle load to: 1125 kg
B12 PK	**2.0 t, 2.3, 2.3 t, 2.3 t BioPower, 2.3 Turbo, 3.0 TiD, 3.0 V6t** 09/01 - 125 -224 kW	**46-194404**		CH.Nr.: YS3ES55CD2 ->; Conditions see certificates VA: lowering (expertise): 30 mm; axle load to: 1175 kg HA: lowering (expertise): 30 mm; axle load to: 1125 kg
B12 PK	**1.9 TiD, 2.2 TiD, 2.3 Turbo** 09/01 - 88 -184 kW	**46-194404**		Conditions see certificates VA: lowering (expertise): 30 mm; axle load to: 1175 kg HA: lowering (expertise): 30 mm; axle load to: 1125 kg
SAAB 9-7X				
B6 Sport	**4.2** 12/05 - 213 kW	*24-103336*	**24-103343**	
SAAB 90				
B3	**2.0** 08/84 - 08/87 74 kW		*36-159994*	with standard chassis
B4	**2.0** 08/84 - 08/87 74 kW	*19-019505*	**19-019543**	
SAAB 95 Station Wagon				
B4	**1.5 V4** 10/65 - 12/78 46 -50 kW	*19-019505*		
SAAB 96				
B4	**1.5 V4** 10/65 - 08/80 46 -50 kW	*19-019505*		
B6 Sport	**1.5 V4** 10/65 - 08/80 46 -50 kW		*24-181846*	
SAAB 99 Combi Coupe				
B3	**1.7, 1.85, 1.85 i, 2.0, 2.0 i** 08/68 - 12/84 59 -87 kW		*36-159994*	with standard chassis
B3	**2.0 i, 2.0 Turbo** 12/78 - 12/84 87 -107 kW		**36-159987**	with standard chassis; Heavy Duty Version .
B3	**2.0 Turbo** 12/78 - 06/80 107 kW	**36-160013**	*36-159994*	with standard chassis
B4	**2.0, 2.0 Turbo** 03/76 - 06/80 79 -107 kW	*19-019505*	**19-019543**	
B6 Sport	**1.7, 1.85, 1.85 i, 2.0, 2.0 i, 2.0 Turbo** 08/68 - 06/80 59 -107 kW	*24-003858*		

S

SAAB				
SAAB 99				
B3	**2.0, 2.0 EMS, 2.0 GL** 04/72 - 12/84 70 -87 kW		*36-159994*	with standard chassis
B3	**2.0 GL** 12/78 - 12/84 74 kW		**36-159987**	with standard chassis; Heavy Duty Version .
B4	**2.0, 2.0 EMS** 04/72 - 08/74 70 -81 kW	*19-019505* OIO		
B4	**2.0 EMS, 2.0 GL** 09/74 - 04/78 74 -87 kW	*19-019505* OIO		
B4	**2.0 EMS, 2.0 GL** 05/78 - 12/84 74 -87 kW	*19-019505* OIO	**19-019543** OIO	
B6 Sport	**2.0, 2.0 EMS, 2.0 GL** 04/72 - 04/78 70 -87 kW	*24-003858* OIO		
SAAB 900 I Combi Coupe				
B3	**2.0, 2.0 -16, 2.0 c, 2.0 i, 2.1 -16, 2.1 16 S** 01/81 - 07/92 73 -107 kW		*36-159994*	with standard chassis
B3	**2.0, 2.0 -16, 2.0 c, 2.0 i, 2.0 S Turbo-16, 2.0 Turbo, 2.0 Turbo-16, 2.0 Turbo-16 S, 2.0 Turbo-16 S CAT, 2.1 -16, 2.1 16 S** 01/81 - 07/92 73 -132 kW		*36-159994*	with standard chassis; Heavy Duty Version .
B3	**2.0, 2.0 c, 2.0 EMS, 2.0 Turbo** 06/78 - 12/80 74 -107 kW		**36-159987**	with standard chassis
B3	**2.0 S Turbo-16, 2.0 Turbo, 2.0 Turbo-16, 2.0 Turbo-16 S, 2.0 Turbo-16 S CAT** 01/81 - 12/93 103 -132 kW	**36-160013**	*36-159994*	with standard chassis
B4	**2.0 S Turbo-16, 2.0 Turbo, 2.0 Turbo-16, 2.0 Turbo-16 S, 2.0 Turbo-16 S CAT, 2.1 -16** 09/90 - 12/93 100 -132 kW	**19-019536** OIO	**19-019543** OIO	
B6 Sport	**2.0 -16, 2.0 S Turbo-16, 2.0 Turbo-16, 2.0 Turbo-16 S, 2.0 Turbo-16 S CAT** 02/84 - 12/93 93 -132 kW	**24-181501** OIO	**24-003971** OIO	
SAAB 900 I (AC4, AM4)				
B3	**2.0, 2.0 -16, 2.0 c, 2.0 i, 2.1 -16, 2.1 16 S** 12/80 - 07/92 73 -107 kW		*36-159994*	with standard chassis
B3	**2.0, 2.0 -16, 2.0 c, 2.0 i, 2.0 S Turbo-16, 2.0 Turbo, 2.0 Turbo-16, 2.0 Turbo-16 S, 2.0 Turbo-16 S CAT, 2.1 -16, 2.1 16 S** 12/80 - 07/92 73 -129 kW		*36-159994*	with standard chassis; Heavy Duty Version .
B3	**2.0 EMS** 01/79 - 12/80 87 kW		**36-159987**	with standard chassis
B3	**2.0 S Turbo-16, 2.0 Turbo, 2.0 Turbo-16, 2.0 Turbo-16 S, 2.0 Turbo-16 S CAT** 12/80 - 12/93 103 -129 kW	**36-160013**	*36-159994*	with standard chassis
B4	**2.0, 2.0 -16, 2.0 c, 2.0 EMS, 2.0 i, 2.0 S Turbo-16, 2.0 Turbo, 2.0 Turbo-16, 2.0 Turbo-16 S, 2.0 Turbo-16 S CAT, 2.1 -16** 01/84 - 12/93 73 -129 kW	**19-019536** OIO	**19-019543** OIO	

S

SAAB				
SAAB 900 I (AC4, AM4)				
B6 Sport	**2.0, 2.0 -16, 2.0 c, 2.0 EMS, 2.0 i, 2.0 S Turbo-16, 2.0 Turbo, 2.0 Turbo-16, 2.0 Turbo-16 S, 2.0 Turbo-16 S CAT, 2.1 -16** 01/84 - 12/93 73 -129 kW	**24-181501**	**24-003971**	
SAAB 900 I Convertible				
B3	**2.0 -16, 2.0 S Turbo-16, 2.0 Turbo-16, 2.0 Turbo-16 S, 2.1 -16** 11/86 - 06/94 93 -129 kW	**36-160013**	*36-159994*	with standard chassis
B3	**2.0 Turbo-16, 2.0 Turbo-16 S** 11/86 - 06/94 118 -129 kW		**36-159987**	with standard chassis; Heavy Duty Version .
B4	**2.0 -16, 2.0 S Turbo-16, 2.0 Turbo-16, 2.0 Turbo-16 S, 2.1 -16** 11/86 - 06/94 93 -129 kW	**19-019536**	**19-019543**	
B6 Sport	**2.0 -16, 2.0 S Turbo-16, 2.0 Turbo-16, 2.0 Turbo-16 S, 2.1 -16** 11/86 - 06/94 93 -129 kW	**24-181501**	**24-003971**	
SAAB 900 II				
B4	**2.0 i** 07/93 - 07/94 98 kW	**21-031267**	**19-061276**	
B4	**2.0 -16 Turbo, 2.0 i, 2.3 -16, 2.5 -24 V6** 07/93 - 02/98 96 -136 kW	**21-031267**	**19-061276**	
B6 Sport	**2.0 -16 Turbo, 2.0 i, 2.3 -16, 2.5 -24 V6** 07/93 - 02/98 96 -136 kW	**34-030936**	**24-025386**	
SAAB 900 II Coupe				
B4	**2.0 -16 Turbo, 2.0 i, 2.3 -16, 2.5 -24 V6** 12/93 - 02/98 96 -136 kW	**21-031267**	**19-061276**	
B6 Sport	**2.0 -16 Turbo, 2.0 i, 2.3 -16, 2.5 -24 V6** 12/93 - 02/98 96 -136 kW	**34-030936**	**24-025386**	
SAAB 900 II Convertible				
B4	**2.0 -16 Turbo, 2.0 i, 2.3 -16, 2.5 -24 V6** 12/93 - 02/98 96 -136 kW	**21-031274**	**19-061276**	
B6 Sport	**2.0 -16 Turbo, 2.0 i, 2.3 -16, 2.5 -24 V6** 12/93 - 02/98 96 -136 kW	**34-030936**	**24-025386**	
SAAB 9000 Hatchback				
B4	**2.0 -16, 2.0 -16 Turbo** 09/84 - 12/86 92 -129 kW	*22-045706*	**19-029382**	-> CH.Nr.: H 101 5469; -> CH.Nr.: H 800 0555; with standard chassis
B4	**2.0, 2.0 -16, 2.0 -16 CS, 2.0 -16 ND Turbo, 2.0 -16 Turbo, 2.0 -16 Turbo CS, 2.0 16v, 2.0 T16, 2.3, 2.3 -16 Aero CS, 2.3 -16 CS, 2.3 -16 CSE, 2.3 -16 CSE Eco Power, 2.3 -16 Turbo, 2.3 -16 Turbo CSE, 3.0 -24 V6 CS/CSE** 01/87 - 12/98 92 -165 kW	i.V. *22-045713*	**19-029382**	CH.Nr.: H 101 5470 ->; CH.Nr.: H 800 0556 ->; with standard chassis

S

SAAB

SAAB 9000 Hatchback

B6 Sport	**2.0, 2.0 -16, 2.0 -16 CS, 2.0 -16 ND Turbo, 2.0 -16 Turbo, 2.0 -16 Turbo CS, 2.0 16v, 2.0 T16, 2.3, 2.3 -16 Aero CS, 2.3 -16 CS, 2.3 -16 CSE, 2.3 -16 CSE Eco Power, 2.3 -16 Turbo, 2.3 -16 Turbo CSE, 3.0 -24 V6 CS/CSE** 01/87 - 12/98 92 -165 kW	i.V.	**24-017855**	CH.Nr.: H 101 5470 ->; CH.Nr.: H 800 0556 ->

SAAB 9000

B4	**2.0, 2.0 -16, 2.0 -16 CD, 2.0 -16 Turbo, 2.0 -16 Turbo CD, 2.0 Carlsson, 2.0 T16, 2.3, 2.3 -16 CD, 2.3 -16 CD Turbo, 2.3 -16 CDE, 2.3 -16 CDE Eco-Power, 2.3 -16 Turbo, 3.0 -24 V6 CD/CDE** 01/87 - 12/98 94 -165 kW	i.V. *22-045713*	**19-029382**	CH.Nr.: H 101 5470 ->; CH.Nr.: H 800 0556 ->; with standard chassis
B4	**2.0 -16 Turbo** 04/85 - 12/86 129 kW	*22-045706*	**19-029382**	-> CH.Nr.: H 101 5469; -> CH.Nr.: H 800 0555; with standard chassis
B6 Sport	**2.0, 2.0 -16, 2.0 -16 CD, 2.0 -16 Turbo, 2.0 -16 Turbo CD, 2.0 Carlsson, 2.0 T16, 2.3, 2.3 -16 CD, 2.3 -16 CD Turbo, 2.3 -16 CDE, 2.3 -16 CDE Eco-Power, 2.3 -16 Turbo, 3.0 -24 V6 CD/CDE** 01/87 - 12/98 94 -165 kW	i.V.	**24-017855**	CH.Nr.: H 800 0556 ->; CH.Nr.: H 101 5470 ->

SEAT

SEAT ALHAMBRA (7V8, 7V9)

B3	**1.8 T 20V, 1.9 TDI, 2.0 i** 04/96 - 03/10 66 -110 kW	**37-134051**	**38-131257**	with standard chassis
B3	**1.8 T 20V, 1.9 TDI, 2.0 i** 04/96 - 03/10 66 -110 kW	**37-134327**	**38-131264**	with standard chassis; Heavy Duty Version .
B3	**1.9 TDI 4motion, 1.9 Tdi 4x4, 2.8 V6 4motion** 06/00 - 03/10 85 -150 kW	**37-134457**	**38-131271**	with standard chassis
B3	**2.0 TDI, 2.8 V6** 06/00 - 03/10 103 -150 kW	**37-134327**	**38-131264**	with standard chassis
B3	**2.0 TDI, 2.8 V6** 06/00 - 03/10 103 -150 kW	**37-134457**	**38-131271**	with standard chassis; Heavy Duty Version .
B4	**1.8 T 20V, 1.9 TDI, 1.9 TDI 4motion, 1.9 Tdi 4x4, 2.0 i, 2.0 TDI, 2.8 V6, 2.8 V6 4motion** 04/96 - 03/10 66 -150 kW	**22-046796**	**19-061078**	
B6 Sport	**1.8 T 20V, 1.9 TDI, 1.9 TDI 4motion, 1.9 Tdi 4x4, 2.0 i, 2.0 TDI, 2.8 V6, 2.8 V6 4motion** 04/96 - 03/10 66 -150 kW	**35-103509**	**24-103527**	with sports suspension
B8	**1.8 T 20V, 1.9 TDI, 1.9 TDI 4motion, 1.9 Tdi 4x4, 2.0 i, 2.0 TDI, 2.8 V6, 2.8 V6 4motion** 04/96 - 03/10 66 -150 kW	**35-103516**	**24-103534**	with sports suspension
B12 PK	**1.8 T 20V, 2.0 i** 04/96 - 03/10 85 -110 kW	**46-193858**		Conditions see certificates VA: lowering (expertise): 30 mm; axle load to: 1240 kg HA: lowering (expertise): 20-25 mm; axle load to: 1355 kg
B12 PK	**1.9 TDI, 2.0 TDI, 2.8 V6** 04/96 - 03/10 66 -150 kW	**46-193865**		Conditions see certificates VA: lowering (expertise): 30 mm; axle load to: 1260 kg HA: lowering (expertise): 20-25 mm; axle load to: 1355 kg

S

SEAT				
SEAT ALHAMBRA (710)				
B1	**1.4 TSI, 2.0 TDI, 2.0 TDI All-wheel Drive, 2.0 TSI** 06/10 - 85 -147 kW	**12-226580**	**12-226535**	HA: for PR number: F4E/F4F/F5Z; for PR number: 1JA/1JC
B4	**1.4 TSI, 2.0 TDI, 2.0 TDI All-wheel Drive, 2.0 TSI** 06/10 - 85 -147 kW	**22-196859**	**19-196862**	with standard chassis; without electronic suspension control HA: without ride height adjustment
B6 Sport	**1.4 TSI, 2.0 TDI, 2.0 TDI All-wheel Drive, 2.0 TSI** 06/10 - 85 -147 kW	**35-108177**	**24-172936**	without electronic suspension control VA: Øa: 55 mm HA: without ride height adjustment
SEAT ALTEA (5P1)				
B1	**1.2 TSI, 1.4 16V, 1.4 TSI, 1.6, 1.6 LPG, 1.6 TDI, 1.8 TFSI, 1.9 TDI, 2.0 FSI, 2.0 TDI, 2.0 TDI 16V, 2.0 TFSI** 04/06 - 63 -147 kW	**12-224074**	**12-224081**	VA: with ball bearing HA: without ball bearing
B3	**1.6, 1.6 LPG** 03/04 - 75 kW	**36-199624**	**36-134076**	with standard chassis
B3	**1.6 TDI, 1.8 TFSI, 1.9 TDI, 2.0 FSI** 05/04 - 66 -118 kW	**37-147747**	**36-134076**	with standard chassis
B3	**2.0 TDI, 2.0 TDI 16V** 03/04 - 100 -125 kW	**36-199631**	**36-134076**	with standard chassis
B4	**1.2 TSI, 1.4 16V, 1.4 TSI, 1.6, 1.6 LPG, 1.6 TDI, 1.8 TFSI, 1.9 TDI, 2.0 FSI, 2.0 TDI, 2.0 TDI 16V, 2.0 TFSI** 04/06 - 63 -147 kW	**22-131607**	**19-127439**	with standard chassis VA: Øa: 50 mm
B4	**1.2 TSI, 1.4 16V, 1.4 TSI, 1.6, 1.6 LPG, 1.6 TDI, 1.8 TFSI, 1.9 TDI, 2.0 FSI, 2.0 TDI, 2.0 TDI 16V, 2.0 TFSI** 04/06 - 63 -147 kW	**22-131614**	**19-127439**	with standard chassis VA: Øa: 55 mm
B4	**1.2 TSI, 1.4 16V, 1.4 TSI, 1.6, 1.6 LPG, 1.6 TDI, 1.8 TFSI, 1.9 TDI, 2.0 FSI, 2.0 TDI, 2.0 TDI 16V, 2.0 TFSI** 04/06 - 63 -147 kW	**22-139184**	**19-127439**	with sports suspension VA: Øa: 50 mm
B4	**1.2 TSI, 1.4 16V, 1.4 TSI, 1.6, 1.6 LPG, 1.6 TDI, 1.8 TFSI, 1.9 TDI, 2.0 FSI, 2.0 TDI, 2.0 TDI 16V, 2.0 TFSI** 04/06 - 63 -147 kW	**22-139191**	**19-127439**	with sports suspension VA: Øa: 55 mm
B4	**2.0 TDI 16V** 03/04 - 103 kW	*19-019567*		
B6 Sport	**1.2 TSI, 1.4 16V, 1.4 TSI, 1.6, 1.6 LPG, 1.6 TDI, 1.8 TFSI, 1.9 TDI, 2.0 FSI, 2.0 TDI, 2.0 TDI 16V, 2.0 TFSI** 04/06 - 63 -147 kW	**35-113751**	**24-172936**	outside diameter strut 50 mm; with standard chassis VA: Øa: 50 mm
B6 Sport	**1.2 TSI, 1.4 16V, 1.4 TSI, 1.6, 1.6 LPG, 1.6 TDI, 1.8 TFSI, 1.9 TDI, 2.0 FSI, 2.0 TDI, 2.0 TDI 16V, 2.0 TFSI** 04/06 - 63 -147 kW	**35-108177**	**24-172936**	outside diameter strut 55 mm; with standard chassis VA: Øa: 55 mm
B8	**1.2 TSI, 1.4 16V, 1.4 TSI, 1.6, 1.6 LPG, 1.6 TDI, 1.8 TFSI, 1.9 TDI, 2.0 FSI, 2.0 TDI, 2.0 TDI 16V, 2.0 TFSI** 04/06 - 63 -147 kW	**35-113768**	**24-178006**	outside diameter strut 50 mm; with sports suspension VA: Øa: 50 mm
B8	**1.2 TSI, 1.4 16V, 1.4 TSI, 1.6, 1.6 LPG, 1.6 TDI, 1.8 TFSI, 1.9 TDI, 2.0 FSI, 2.0 TDI, 2.0 TDI 16V, 2.0 TFSI** 04/06 - 63 -147 kW	**35-108191**	**24-178006**	outside diameter strut 55 mm; with sports suspension VA: Øa: 55 mm

SEAT

SEAT ALTEA (5P1)

B12 PK	**1.4 TSI, 1.6, 1.6 LPG** 03/04 - 75 -92 kW	**46-182487**		outside diameter strut 50 mm; Conditions see certificates VA: lowering (expertise): 30 mm; axle load to: 1022 kg HA: without ride height adjustment; lowering (expertise): 30 mm; axle load to: 998 kg
B12 PK	**1.4 TSI, 1.6, 1.6 LPG, 2.0 FSI** 05/04 - 75 -110 kW	**46-000187**		outside diameter strut 55 mm; Conditions see certificates VA: lowering (expertise): 30 mm; axle load to: 1022 kg HA: without ride height adjustment; lowering (expertise): 30 mm; axle load to: 998 kg
B12 PK	**1.8 TFSI, 1.9 TDI, 2.0 FSI, 2.0 TDI, 2.0 TDI 16V, 2.0 TFSI** 04/06 - 66 -147 kW	**46-182494**		outside diameter strut 50 mm; Conditions see certificates VA: lowering (expertise): 30 mm; axle load to: 1120 kg HA: without ride height adjustment; lowering (expertise): 30 mm; axle load to: 998 kg
B12 PK	**1.8 TFSI, 1.9 TDI, 2.0 FSI, 2.0 TDI, 2.0 TDI 16V, 2.0 TFSI** 04/06 - 66 -147 kW	**46-000194**		outside diameter strut 55 mm; Conditions see certificates VA: lowering (expertise): 30 mm; axle load to: 1120 kg HA: without ride height adjustment; lowering (expertise): 30 mm; axle load to: 998 kg
B12 PK	**2.0 FSI** 05/04 - 03/09 110 kW	**46-182487**		outside diameter strut 50 mm; Conditions see certificates VA: lowering (expertise): 30 mm; axle load to: 1022 kg HA: without ride height adjustment; lowering (expertise): 30 mm; axle load to: 998 kg
B14	**1.2 TSI, 1.4 16V, 1.4 TSI, 1.6, 1.6 LPG, 1.6 TDI, 1.8 TFSI, 1.9 TDI, 2.0 FSI, 2.0 TDI, 2.0 TDI 16V, 2.0 TFSI** 04/06 - 63 -147 kW	**47-128347**		Spacers required for several wheel/tyre combinations; outside diameter strut 50 mm; Conditions see certificates VA: lowering (expertise): 30-50 mm; axle load to: 1210 kg HA: lowering (expertise): 30-50 mm; axle load to: 1095 kg
B14	**1.2 TSI, 1.4 16V, 1.4 TSI, 1.6, 1.6 LPG, 1.6 TDI, 1.8 TFSI, 1.9 TDI, 2.0 FSI, 2.0 TDI, 2.0 TDI 16V, 2.0 TFSI** 04/06 - 63 -147 kW	**47-127708**		Spacers required for several wheel/tyre combinations; outside diameter strut 55 mm; Conditions see certificates VA: lowering (expertise): 30-50 mm; axle load to: 1210 kg HA: lowering (expertise): 30-50 mm; axle load to: 1095 kg
B16 PSS10	**1.2 TSI, 1.4 16V, 1.4 TSI, 1.6, 1.6 LPG, 1.6 TDI, 1.8 TFSI, 1.9 TDI, 2.0 FSI, 2.0 TDI, 2.0 TDI 16V, 2.0 TFSI** 04/06 - 63 -147 kW	**48-135238**		outside diameter strut 50 mm; Conditions see certificates VA: mark: G02; lowering (expertise): 30-50 mm; axle load to: 1210 kg HA: lowering (expertise): 30-50 mm; axle load to: 1095 kg
B16 PSS10	**1.2 TSI, 1.4 16V, 1.4 TSI, 1.6, 1.6 LPG, 1.6 TDI, 1.9 TDI, 2.0 FSI, 2.0 TDI, 2.0 TDI 16V, 2.0 TFSI** 04/06 - 63 -147 kW	**48-135245**		outside diameter strut 55 mm; Conditions see certificates VA: mark: G07,G08; lowering (expertise): 30-50 mm; axle load to: 1210 kg HA: lowering (expertise): 30-50 mm; axle load to: 1095 kg
B16 RC	**1.2 TSI, 1.4 16V, 1.4 TSI, 1.6, 1.6 LPG, 1.6 TDI, 1.8 TFSI, 1.9 TDI, 2.0 FSI, 2.0 TDI, 2.0 TDI 16V, 2.0 TFSI** 04/06 - 63 -147 kW	**49-196849**		Øa: 55 mm; mark: G07, G08, G09, G11; Conditions see certificates VA: lowering (expertise): 30-50 mm; axle load to: 1140 kg HA: lowering (expertise): 30-50 mm; axle load to: 1040 kg

SEAT ALTEA XL (5P5, 5P8)

B1	**1.2 TSI, 1.4, 1.4 TSI** 11/07 - 63 -92 kW	**12-224074**	**12-224081**	VA: with ball bearing HA: without ball bearing
B1	**1.6, 1.6 LPG, 1.6 Multifuel, 1.6 TDI, 1.8 TFSI, 1.9 TDI, 2.0 FSI, 2.0 TDI, 2.0 TDI 4WD, 2.0 TDI 16V, 2.0 TDI 4WD, 2.0 TFSI 4WD, 2.0 TFSI 4x4** 10/06 - 66 -155 kW	**12-116966**		VA: with ball bearing
B3	**1.6, 1.6 LPG, 1.6 Multifuel** 10/06 - 75 kW	**36-199624**		with standard chassis
B3	**1.6 TDI, 1.8 TFSI, 1.9 TDI, 2.0 FSI** 10/06 - 66 -118 kW	**37-147747**		with standard chassis
B3	**2.0 TDI, 2.0 TDI 16V** 10/06 - 100 -125 kW	**36-199631**		with standard chassis
B4	**1.2 TSI, 1.4, 1.4 TSI, 1.6, 1.6 LPG, 1.6 Multifuel, 1.6 TDI, 1.8 TFSI, 1.9 TDI, 2.0 FSI, 2.0 TDI, 2.0 TDI 4WD, 2.0 TDI 16V, 2.0 TDI 4WD, 2.0 TFSI 4WD, 2.0 TFSI 4x4** 05/09 - 63 -155 kW	**22-131607**	**19-127439**	with standard chassis VA: Øa: 50 mm

S

SEAT

SEAT ALTEA XL (5P5, 5P8)

B4	**1.2 TSI, 1.4, 1.4 TSI, 1.6, 1.6 LPG, 1.6 Multifuel, 1.6 TDI, 1.8 TFSI, 1.9 TDI, 2.0 FSI, 2.0 TDI, 2.0 TDI 4WD, 2.0 TDI 16V, 2.0 TDI 4WD, 2.0 TFSI 4WD, 2.0 TFSI 4x4** 05/09 - 63 -155 kW	**22-131614**	**19-127439**	with standard chassis VA: Øa: 55 mm
B4	**1.2 TSI, 1.4, 1.4 TSI, 1.6, 1.6 LPG, 1.6 Multifuel, 1.6 TDI, 1.8 TFSI, 1.9 TDI, 2.0 FSI, 2.0 TDI, 2.0 TDI 4WD, 2.0 TDI 16V, 2.0 TDI 4WD, 2.0 TFSI 4WD, 2.0 TFSI 4x4** 05/09 - 63 -155 kW	**22-139184**	**19-127439**	with sports suspension VA: Øa: 50 mm
B4	**1.2 TSI, 1.4, 1.4 TSI, 1.6, 1.6 LPG, 1.6 Multifuel, 1.6 TDI, 1.8 TFSI, 1.9 TDI, 2.0 FSI, 2.0 TDI, 2.0 TDI 4WD, 2.0 TDI 16V, 2.0 TDI 4WD, 2.0 TFSI 4WD, 2.0 TFSI 4x4** 05/09 - 63 -155 kW	**22-139191**	**19-127439**	with sports suspension VA: Øa: 55 mm
B6 Sport	**1.2 TSI, 1.4, 1.4 TSI, 1.6, 1.6 LPG, 1.6 Multifuel, 1.6 TDI, 1.8 TFSI, 1.9 TDI, 2.0 FSI, 2.0 TDI, 2.0 TDI 4WD, 2.0 TDI 16V, 2.0 TDI 4WD, 2.0 TFSI 4WD, 2.0 TFSI 4x4** 05/09 - 63 -155 kW	**35-108177**	**24-172936**	with standard chassis VA: Øa: 55 mm
B8	**1.2 TSI, 1.4, 1.4 TSI, 1.6, 1.6 LPG, 1.6 Multifuel, 1.6 TDI, 1.8 TFSI, 1.9 TDI, 2.0 FSI, 2.0 TDI, 2.0 TDI 4WD, 2.0 TDI 16V, 2.0 TDI 4WD, 2.0 TFSI 4WD, 2.0 TFSI 4x4** 05/09 - 63 -155 kW	**35-108191**	**24-178006**	with sports suspension VA: Øa: 55 mm
B12 PK	**1.4 TSI, 1.6, 2.0 FSI** 10/06 - 75 -110 kW	**46-182500**		outside diameter strut 55 mm; Conditions see certificates VA: lowering (expertise): 30 mm; axle load to: 1022 kg HA: without ride height adjustment; lowering (expertise): 30 mm; axle load to: 1050 kg
B12 PK	**1.8 TFSI, 1.9 TDI, 2.0 FSI, 2.0 TDI, 2.0 TDI 16V** 10/06 - 66 -125 kW	**46-182517**		outside diameter strut 55 mm; Conditions see certificates VA: lowering (expertise): 30 mm; axle load to: 1120 kg HA: without ride height adjustment; lowering (expertise): 30 mm; axle load to: 1050 kg
B14	**1.2 TSI, 1.4, 1.4 TSI, 1.6, 1.6 LPG, 1.6 Multifuel, 1.6 TDI, 1.8 TFSI, 1.9 TDI, 2.0 FSI, 2.0 TDI, 2.0 TDI 4WD, 2.0 TDI 16V, 2.0 TDI 4WD, 2.0 TFSI 4WD, 2.0 TFSI 4x4** 05/09 - 63 -155 kW	**47-128347**		Spacers required for several wheel/tyre combinations; outside diameter strut 50 mm; Conditions see certificates VA: lowering (expertise): 30-50 mm; axle load to: 1210 kg HA: lowering (expertise): 30-50 mm; axle load to: 1095 kg
B14	**1.2 TSI, 1.4, 1.4 TSI, 1.6, 1.6 LPG, 1.6 Multifuel, 1.6 TDI, 1.8 TFSI, 1.9 TDI, 2.0 FSI, 2.0 TDI, 2.0 TDI 4WD, 2.0 TDI 16V, 2.0 TDI 4WD, 2.0 TFSI 4WD, 2.0 TFSI 4x4** 05/09 - 63 -155 kW	**47-127708**		Spacers required for several wheel/tyre combinations; outside diameter strut 55 mm; Conditions see certificates VA: lowering (expertise): 30-50 mm; axle load to: 1210 kg HA: lowering (expertise): 30-50 mm; axle load to: 1095 kg
B16 PSS10	**1.2 TSI, 1.4, 1.4 TSI, 1.6, 1.6 LPG, 1.6 Multifuel, 1.6 TDI, 1.8 TFSI, 1.9 TDI, 2.0 FSI, 2.0 TDI, 2.0 TDI 4WD, 2.0 TDI 16V, 2.0 TDI 4WD, 2.0 TFSI 4WD, 2.0 TFSI 4x4** 05/09 - 63 -155 kW	**48-135238**		outside diameter strut 50 mm; Conditions see certificates VA: mark: G02; lowering (expertise): 30-50 mm; axle load to: 1210 kg HA: lowering (expertise): 30-50 mm; axle load to: 1095 kg
B16 PSS10	**1.2 TSI, 1.4, 1.4 TSI, 1.6, 1.6 LPG, 1.6 Multifuel, 1.6 TDI, 1.8 TFSI, 1.9 TDI, 2.0 FSI, 2.0 TDI, 2.0 TDI 4WD, 2.0 TDI 16V, 2.0 TDI 4WD, 2.0 TFSI 4WD, 2.0 TFSI 4x4** 05/09 - 63 -155 kW	**48-135245**		outside diameter strut 55 mm; Conditions see certificates VA: mark: G07,G08; lowering (expertise): 30-50 mm; axle load to: 1210 kg HA: lowering (expertise): 30-50 mm; axle load to: 1095 kg

SEAT				
SEAT AROSA (6H)				
B1	**1.0, 1.4, 1.4 16V, 1.4 TDI, 1.7 SDI** 08/97 - 06/04 37 -74 kW	**12-116959**		VA: with ball bearing
B2	**1.0, 1.4, 1.4 16V, 1.4 TDI, 1.7 SDI** 08/97 - 06/04 37 -74 kW	**17-106405** **11-101307** SP	**11-149828** SP	
B3	**1.0, 1.4** 05/97 - 10/98 37 -44 kW	**37-131432**	**36-134250**	with standard chassis
B3	**1.0, 1.4** 11/98 - 06/04 37 -44 kW	**36-201907**	**36-134250**	with standard chassis; with AC; manual transmission
B3	**1.4** 11/98 - 06/04 44 kW	**37-130930**	**36-134250**	with standard chassis; automatic transmission
B3	**1.4 TDI** 01/00 - 06/04 55 kW	**37-131425**	**36-134250**	with standard chassis
B3	**1.7 SDI** 08/97 - 10/98 44 kW	**37-131425**	**36-134250**	with standard chassis; with AC
B3	**1.7 SDI** 08/97 - 10/98 44 kW	**37-130930**	**36-134250**	with standard chassis; without AC
B4	**1.0, 1.4, 1.4 16V, 1.4 TDI, 1.7 SDI** 08/97 - 06/04 37 -74 kW	**22-044761** **11-101307** SP	**19-067803** **11-149828** SP	
B6 Sport	**1.0, 1.4, 1.4 16V, 1.4 TDI, 1.7 SDI** 08/97 - 06/04 37 -74 kW	**35-046196**	**24-028066**	
B8	**1.0, 1.4, 1.4 16V, 1.4 TDI, 1.7 SDI** 08/97 - 06/04 37 -74 kW	**35-046202**	**24-028073**	
B10	**1.0, 1.4, 1.4 16V, 1.4 TDI, 1.7 SDI** 08/97 - 06/04 37 -74 kW	**46-112019**		Conditions see certificates VA: lowering (expertise): 60 mm; axle load to: 790 kg HA: lowering (expertise): 40 mm
B10	**1.0, 1.4, 1.4 16V, 1.4 TDI, 1.7 SDI** 08/97 - 06/04 37 -74 kW	**46-112002**		Conditions see certificates VA: lowering (expertise): 60 mm; axle load from: 791 kg HA: lowering (expertise): 40 mm
B12 PK	**1.0, 1.4, 1.4 16V, 1.4 TDI, 1.7 SDI** 08/97 - 06/04 37 -74 kW	**46-193896**		Conditions see certificates VA: lowering (expertise): 30 mm; axle load to: 810 kg HA: lowering (expertise): 20-25 mm; axle load to: 690 kg
MS	**1.0, 1.4, 1.4 16V, 1.4 TDI, 1.7 SDI** 08/97 - 06/04 37 -74 kW	*35-607885*	*24-607896*	mark: Lupo Cup; Without roadworthy certificate VA: Height Adjustable HA: with unibal joint bearing; rebound: 50 mm
SEAT CORDOBA (6K2/C2)				
B1	**1.0 CL, 1.0 i, 1.3, 1.4, 1.4 i, 1.4 i 16V, 1.6 i, 1.7 SDI, 1.8 i, 1.8 i 16V, 1.9 D, 1.9 SDI, 1.9 TD, 1.9 TDI, 2.0 i, 2.0 i 16V** CH-Nr. - 06/99 33 -110 kW	**12-117659**	**12-117239**	CH.Nr.: R 080001 -> VA: with ball bearing
B2	**1.0 CL, 1.0 i, 1.3, 1.4, 1.4 i, 1.4 i 16V, 1.6 i, 1.8 i, 1.8 i 16V, 1.9 D, 1.9 TD** 02/93 - CH-Nr. 33 -95 kW	**17-047142** **11-101291** SP	**15-106377** **11-101352** SP	-> CH.Nr.: R 08000; for vehicles with "Basisachse" only
B2	**1.0 CL, 1.0 i, 1.3, 1.4, 1.4 i, 1.4 i 16V, 1.6 i, 1.8 i, 1.8 i 16V, 1.9 D, 1.9 TD** CH-Nr. - 08/96 33 -95 kW	**17-104029** **11-101291** SP	**15-106377** **11-101352** SP	CH.Nr.: R 080001 ->; for vehicles with "Plusachse" only
B2	**1.7 SDI, 1.9 SDI, 1.9 TDI** 03/97 - 06/99 44 -81 kW	**17-104029** **11-101291** SP	**15-106377** **11-101352** SP	
B3	**1.4 i, 1.4 i 16V** 06/94 - 06/99 44 -74 kW	**36-131112**	**36-130641**	with standard chassis

S

SEAT

SEAT CORDOBA (6K2/C2)

B3	**1.6 i, 1.7 SDI, 1.9 D, 1.9 SDI, 1.9 TDI** 02/93 - 10/99 44 -81 kW	**36-130818**	**36-130641**	with standard chassis
B3	**1.8 i, 1.8 i 16V, 2.0 i, 2.0 i 16V** 02/93 - 06/99 66 -110 kW	**36-130825**	**36-130641**	with standard chassis
B4	**1.0 CL, 1.0 i, 1.3, 1.4, 1.4 i, 1.4 i 16V, 1.6 i, 1.8 i, 1.8 i 16V, 1.9 D, 1.9 TD** 02/93 - CH-Nr. 33 -95 kW	**22-041142** **11-101291** SP	**19-028651** **11-101352** SP	-> CH.Nr.: R 08000; for vehicles with "Basisachse" only
B4	**1.0 CL, 1.0 i, 1.3, 1.4, 1.4 i, 1.4 i 16V, 1.6 i, 1.8 i, 1.8 i 16V, 1.9 D, 1.9 TD** CH-Nr. - 08/96 33 -95 kW	**22-045010** **11-101291** SP	**19-028651** **11-101352** SP	CH.Nr.: R 080001 ->; for vehicles with "Plusachse" only
B4	**1.8 i 16V** 10/93 - CH-Nr. 95 kW	**22-041142** **11-101291** SP	*19-028668*	-> CH.Nr.: R 559964; mark: Cupra
B4	**1.8 i 16V** CH-Nr. - 08/96 95 kW	**22-045027** **11-101291** SP	*19-028668*	CH.Nr.: R 559965 ->; mark: Cupra
B4	**2.0 i, 2.0 i 16V** 02/93 - CH-Nr. 85 -110 kW	**22-041142** **11-101291** SP	**19-028651**	-> CH.Nr.: R 559964; mark: GTI
B4	**2.0 i, 2.0 i 16V** CH-Nr. - 06/99 85 -110 kW	**22-045027** **11-101291** SP	**19-028651**	CH.Nr.: R 559965 ->; mark: GTI
B4	**1.7 SDI, 1.9 SDI, 1.9 TDI** 03/97 - 06/99 44 -81 kW	**22-045010** **11-101291** SP	**19-028651** **11-101352** SP	
B6 Sport	**1.0 CL, 1.0 i, 1.3, 1.4, 1.4 i, 1.4 i 16V, 1.6 i, 1.7 SDI, 1.8 i, 1.8 i 16V, 1.9 D, 1.9 SDI, 1.9 TD, 1.9 TDI, 2.0 i, 2.0 i 16V** 02/93 - CH-Nr. 33 -110 kW	**35-043959**	**24-021227** **11-101352** SP	-> CH.Nr.: R 08000; for vehicles with "Basisachse" only
B6 Sport	**1.0 CL, 1.0 i, 1.3, 1.4, 1.4 i, 1.4 i 16V, 1.6 i, 1.7 SDI, 1.8 i, 1.8 i 16V, 1.9 D, 1.9 SDI, 1.9 TD, 1.9 TDI, 2.0 i, 2.0 i 16V** CH-Nr. - 06/99 33 -110 kW	**35-043911** **11-101291** SP	**24-021227** **11-101352** SP	CH.Nr.: R 08001 ->; for vehicles with "Plusachse" only; twin-tube
B6 Sport	**1.0 CL, 1.0 i, 1.3, 1.4, 1.4 i, 1.4 i 16V, 1.6 i, 1.7 SDI, 1.8 i, 1.8 i 16V, 1.9 D, 1.9 SDI, 1.9 TD, 1.9 TDI, 2.0 i, 2.0 i 16V** CH-Nr. - 06/99 33 -110 kW	**35-043911**	**24-021227** **11-101352** SP	CH.Nr.: R 08001 ->; for vehicles with "Plusachse" only; mono-tube
B8	**1.0 CL, 1.0 i, 1.3, 1.4, 1.4 i, 1.4 i 16V, 1.6 i, 1.7 SDI, 1.8 i, 1.8 i 16V, 1.9 D, 1.9 SDI, 1.9 TD, 1.9 TDI, 2.0 i, 2.0 i 16V** 02/93 - CH-Nr. 33 -110 kW	**35-043966**	**24-021197** **11-101352** SP	-> CH.Nr.: R 08000; for vehicles with "Basisachse" only
B10	**1.0 CL, 1.0 i, 1.3, 1.4, 1.4 i, 1.4 i 16V, 1.6 i, 1.8 i, 1.8 i 16V, 2.0 i** 02/93 - 06/99 33 -95 kW	**46-111975**		Conditions see certificates VA: lowering (expertise): 60 mm HA: lowering (expertise): 40 mm
B14	**1.0 CL, 1.0 i, 1.3, 1.4, 1.4 i, 1.4 i 16V, 1.6 i, 1.7 SDI, 1.8 i, 1.8 i 16V, 1.9 D, 1.9 SDI, 1.9 TD, 1.9 TDI, 2.0 i, 2.0 i 16V** 02/93 - 06/99 33 -110 kW	**47-080720**		Conditions see certificates VA: lowering (expertise): 30-50 mm; axle load to: 850 kg HA: lowering (expertise): 30-50 mm; axle load to: 780 kg
B16 PSS9	**1.0 CL, 1.0 i, 1.3, 1.4, 1.4 i, 1.4 i 16V, 1.6 i, 1.7 SDI, 1.8 i, 1.8 i 16V, 1.9 D, 1.9 SDI, 1.9 TD, 1.9 TDI, 2.0 i, 2.0 i 16V** 02/93 - 06/99 33 -110 kW	**48-080736**		Conditions see certificates VA: lowering (expertise): 30-50 mm; axle load to: 870 kg HA: lowering (expertise): 30-50 mm; axle load to: 780 kg

SEAT

SEAT CORDOBA Hatchback

B1	**1.6 SXE, 1.9 D, 2.0** CH-Nr. - 04/99 55 -110 kW	**12-117659**	**12-117239**	CH.Nr.: R 080001 ->; VA: with ball bearing
B2	**1.6 SXE, 1.9 D, 2.0** CH-Nr. - 04/99 55 -110 kW	**17-104029** **11-101291** SP	**15-106377** **11-101352** SP	CH.Nr.: R 080001 ->; for vehicles with "Plusachse" only
B3	**1.6 SXE** 07/96 - 04/99 55 kW	**36-130818**	**36-130641**	with standard chassis
B3	**2.0** 07/96 - 04/99 110 kW	**36-130825**	**36-130641**	with standard chassis
B3	**1.9 D** 07/96 - 04/99 66 kW	**36-130818**	**36-130641**	with standard chassis
B4	**1.6 SXE, 1.9 D, 2.0** CH-Nr. - 04/99 55 -110 kW	**22-045010** **11-101291** SP	**19-028651** **11-101352** SP	CH.Nr.: R 080001 ->; for vehicles with "Plusachse" only
B6 Sport	**1.6 SXE, 1.9 D, 2.0** CH-Nr. - 04/99 55 -110 kW	**11-101291** SP	**24-021227** **11-101352** SP	CH.Nr.: R 08001 ->; for vehicles with "Plusachse" only; twin-tube
B6 Sport	**1.6 SXE, 1.9 D, 2.0** CH-Nr. - 04/99 55 -110 kW	**35-043911**	**24-021227** **11-101352** SP	CH.Nr.: R 08001 ->; for vehicles with "Plusachse" only; mono-tube
B8	**1.6 SXE, 1.9 D, 2.0** CH-Nr. - 04/99 55 -110 kW	**35-043928**	**24-021197** **11-101352** SP	CH.Nr.: R 08001 ->; for vehicles with "Plusachse" only; mono-tube
B14	**1.6 SXE, 1.9 D, 2.0** 07/96 - 04/99 55 -110 kW	**47-080720**		Conditions see certificates VA: lowering (expertise): 30-50 mm; axle load to: 870 kg HA: lowering (expertise): 30-50 mm; axle load to: 780 kg
B16 PSS9	**1.6 SXE, 1.9 D, 2.0** 07/96 - 04/99 55 -110 kW	**48-080736**		Conditions see certificates VA: lowering (expertise): 30-50 mm; axle load to: 870 kg HA: lowering (expertise): 30-50 mm; axle load to: 780 kg

SEAT CORDOBA Vario (6K5)

B1	**1.4, 1.4 i, 1.6 i, 1.7 SDI, 1.9 SDI, 1.9 TDI** 07/97 - 06/99 40 -81 kW	**12-117659**	**12-117239**	VA: with ball bearing
B2	**1.4, 1.4 i, 1.6 i, 1.7 SDI, 1.9 SDI, 1.9 TDI** 07/97 - 06/99 40 -81 kW	**17-104029** **11-101291** SP	**15-106377** **11-101352** SP	
B3	**1.4, 1.4 i** 09/96 - 06/99 40 -44 kW	**36-131112**	**36-130658**	with standard chassis
B3	**1.6 i, 1.7 SDI, 1.9 SDI, 1.9 TDI** 08/96 - 06/99 44 -81 kW	**36-130818**	**36-130658**	with standard chassis
B4	**1.4, 1.4 i, 1.6 i, 1.7 SDI, 1.9 SDI, 1.9 TDI** 07/97 - 06/99 40 -81 kW	**22-045010** **11-101291** SP	**19-028651** **11-101352** SP	
B6 Sport	**1.4, 1.4 i, 1.6 i, 1.7 SDI, 1.9 SDI, 1.9 TDI** 07/97 - 06/99 40 -81 kW	**35-043911** **11-101291** SP	**24-026192** **11-101352** SP	VA: twin-tube
B6 Sport	**1.4, 1.4 i, 1.6 i, 1.7 SDI, 1.9 SDI, 1.9 TDI** 07/97 - 06/99 40 -81 kW	**35-043911**	**24-026192** **11-101352** SP	VA: mono-tube
B8	**1.4, 1.4 i, 1.6 i, 1.7 SDI, 1.9 SDI, 1.9 TDI** 07/97 - 06/99 40 -81 kW	**11-101291** SP	**24-026208** **11-101352** SP	VA: twin-tube
B8	**1.4, 1.4 i, 1.6 i, 1.7 SDI, 1.9 SDI, 1.9 TDI** 07/97 - 06/99 40 -81 kW	**35-043928**	**24-026208** **11-101352** SP	VA: mono-tube

S

SEAT

SEAT CORDOBA Vario (6K5)

B14	**1.4, 1.4 i, 1.6 i, 1.7 SDI, 1.9 SDI, 1.9 TDI** 07/97 - 06/99 40 -81 kW	**47-080720**		Conditions see certificates VA: lowering (expertise): 30-50 mm; axle load to: 870 kg HA: lowering (expertise): 30-50 mm; axle load to: 780 kg
B16 PSS9	**1.4, 1.4 i, 1.6 i, 1.7 SDI, 1.9 SDI, 1.9 TDI** 07/97 - 06/99 40 -81 kW	**48-080736**		Conditions see certificates VA: lowering (expertise): 30-50 mm; axle load to: 870 kg HA: lowering (expertise): 30-50 mm; axle load to: 780 kg

SEAT CORDOBA Hatchback (6K2)

B1	**1.0, 1.0 16V, 1.4, 1.4 16V, 1.6, 1.8 T 20V Cupra, 1.9 SDI, 1.9 TDI** 06/99 - 10/02 37 -115 kW	**12-117659**	**12-117239**	VA: with ball bearing
B2	**1.0, 1.0 16V, 1.4, 1.4 16V, 1.6, 1.9 SDI, 1.9 TDI** 06/99 - 10/02 37 -81 kW	**17-104029**	**15-106377** **11-101352** SP	
B3	**1.0, 1.0 16V** 06/99 - 10/02 37 -51 kW	**36-198658**	**36-130641**	with standard chassis
B3	**1.0, 1.0 16V** 06/99 - 10/02 37 -51 kW	**36-201884**	**36-130658**	with standard chassis; Heavy Duty Version .
B3	**1.4, 1.4 16V** 06/99 - 10/02 44 -74 kW	**36-201884**	**36-130641**	with standard chassis
B3	**1.4, 1.4 16V** 06/99 - 10/02 44 -74 kW	**37-131401**	**36-130658**	with standard chassis; Heavy Duty Version .
B3	**1.6, 1.9 SDI** 06/99 - 10/02 50 -74 kW	**37-131401**	**36-130641**	with standard chassis
B3	**1.6, 1.9 SDI** 06/99 - 10/02 50 -74 kW	**37-131418**	**36-130658**	with standard chassis; Heavy Duty Version .
B3	**1.9 TDI** 06/99 - 10/02 66 -81 kW	**37-131418**	**36-130641**	with standard chassis
B3	**1.9 TDI** 06/99 - 10/02 66 -81 kW		**36-130658**	with standard chassis; Heavy Duty Version .
B4	**1.0, 1.0 16V, 1.4, 1.4 16V, 1.6, 1.9 SDI, 1.9 TDI** 06/99 - 10/02 37 -81 kW	**22-045010**	**19-028651** **11-101352** SP	
B4	**1.8 T 20V Cupra** 07/00 - 10/02 115 kW	**22-045027**	*19-028668* **11-101352** SP	
B6 Sport	**1.0, 1.0 16V, 1.4, 1.4 16V, 1.6, 1.8 T 20V Cupra, 1.9 SDI, 1.9 TDI** 06/99 - 10/02 37 -115 kW	**35-043911**	**24-026192** **11-101352** SP	
B8	**1.0, 1.0 16V, 1.4, 1.4 16V, 1.6, 1.8 T 20V Cupra, 1.9 SDI, 1.9 TDI** 06/99 - 10/02 37 -115 kW	**35-043928**	**24-026208** **11-101352** SP	
B14	**1.0, 1.0 16V, 1.4, 1.4 16V, 1.6, 1.8 T 20V Cupra, 1.9 SDI, 1.9 TDI** 06/99 - 10/02 37 -115 kW	**47-081888**		Conditions see certificates VA: lowering (expertise): 30-50 mm; axle load to: 900 kg HA: lowering (expertise): 30-50 mm; axle load to: 780 kg
B16 PSS9	**1.0, 1.0 16V, 1.4, 1.4 16V, 1.6, 1.8 T 20V Cupra, 1.9 SDI, 1.9 TDI** 06/99 - 10/02 37 -115 kW	**48-081894**		Conditions see certificates VA: lowering (expertise): 30-50 mm; axle load to: 900 kg HA: lowering (expertise): 30-50 mm; axle load to: 780 kg

SEAT CORDOBA Vario (6K5)

B1	**1.4, 1.4 16V, 1.6, 1.9 SDI, 1.9 TDI** 06/99 - 12/02 44 -81 kW	**12-117659**	**12-117239**	VA: with ball bearing

SEAT

SEAT CORDOBA Vario (6K5)

B2	**1.4, 1.4 16V, 1.6, 1.9 SDI, 1.9 TDI** 06/99 - 12/02 44 -81 kW	**17-104029** **11-101352** SP	**15-106377** **11-101352** SP	
B3	**1.4, 1.4 16V** 06/99 - 12/02 44 -74 kW	**36-201884**	**36-200825**	with standard chassis
B3	**1.4, 1.4 16V** 06/99 - 12/02 44 -74 kW	**37-131401**		with standard chassis; Heavy Duty Version .
B3	**1.6, 1.9 SDI** 06/99 - 12/02 50 -74 kW	**37-131401**	**36-200825**	with standard chassis
B3	**1.6, 1.9 SDI** 06/99 - 12/02 50 -74 kW	**37-131418**		with standard chassis; Heavy Duty Version .
B3	**1.9 TDI** 06/99 - 12/02 66 -81 kW	**37-131418**	**36-200825**	with standard chassis
B4	**1.4, 1.4 16V, 1.6, 1.9 SDI, 1.9 TDI** 06/99 - 12/02 44 -81 kW	**22-045010** **11-101352** SP	**19-028651** **11-101352** SP	
B6 Sport	**1.4, 1.4 16V, 1.6, 1.9 SDI, 1.9 TDI** 06/99 - 12/02 44 -81 kW	**35-043911** **11-101352** SP	**24-026192** **11-101352** SP	
B8	**1.4, 1.4 16V, 1.6, 1.9 SDI, 1.9 TDI** 06/99 - 12/02 44 -81 kW	**35-043928** **11-101352** SP	**24-026208** **11-101352** SP	
B14	**1.4, 1.4 16V, 1.6, 1.9 SDI, 1.9 TDI** 06/99 - 12/02 44 -81 kW	**47-081888**		Conditions see certificates VA: lowering (expertise): 30-50 mm; axle load to: 900 kg HA: lowering (expertise): 30-50 mm; axle load to: 780 kg
B16 PSS9	**1.4, 1.4 16V, 1.6, 1.9 SDI, 1.9 TDI** 06/99 - 12/02 44 -81 kW	**48-081894**		Conditions see certificates VA: lowering (expertise): 30-50 mm; axle load to: 900 kg HA: lowering (expertise): 30-50 mm; axle load to: 780 kg

SEAT CORDOBA (6L2)

B1	**1.2, 1.2 12V, 1.4 16V, 1.4 TDI, 1.6, 1.6 16V, 1.9 SDI, 1.9 TDI, 2.0** 09/02 - 11/09 47 -96 kW	**12-117741**	**12-117840**	VA: without ball bearing
B3	**1.2, 1.2 12V, 1.4 16V, 1.6, 1.6 16V** 09/02 - 11/09 47 -77 kW	**37-160692**	**36-160716**	with standard chassis
B3	**1.4 TDI, 1.9 SDI, 1.9 TDI, 2.0** 09/02 - 11/09 47 -96 kW	**36-226764**	**36-160716**	with standard chassis
B4	**1.2, 1.2 12V, 1.4 16V, 1.4 TDI, 1.6, 1.6 16V, 1.9 SDI, 1.9 TDI, 2.0** 09/02 - 11/09 47 -96 kW	**22-105813** **11-101321** SP	**19-109572** **11-106470** SP	
B6 Sport	**1.2, 1.2 12V, 1.4 16V, 1.4 TDI, 1.6, 1.6 16V, 1.9 SDI, 1.9 TDI, 2.0** 09/02 - 11/09 47 -96 kW	**35-052173**	**24-067898** **11-106470** SP	
B8	**1.2, 1.2 12V, 1.4 16V, 1.4 TDI, 1.6, 1.6 16V, 1.9 SDI, 1.9 TDI, 2.0** 09/02 - 11/09 47 -96 kW	**35-052180**	**24-067904** **11-106470** SP	
B14	**1.2, 1.2 12V, 1.4 16V, 1.4 TDI, 1.6, 1.6 16V, 1.9 SDI, 1.9 TDI, 2.0** 09/02 - 11/09 47 -96 kW	**47-146914**		Conditions see certificates VA: lowering (expertise): 30-50 mm; axle load to: 960 kg HA: lowering (expertise): 30-45 mm; axle load to: 835 kg
B16 PSS9	**1.2, 1.2 12V, 1.4 16V, 1.4 TDI, 1.6, 1.6 16V, 1.9 SDI, 1.9 TDI, 2.0** 09/02 - 11/09 47 -96 kW	**48-146852**		Conditions see certificates VA: lowering (expertise): 30-50 mm; axle load to: 960 kg HA: lowering (expertise): 30-45 mm; axle load to: 835 kg

S

SEAT

SEAT EXEO (3R2)

B1	**1.6, 1.8 T, 1.8 TSI, 2.0 TDI, 2.0 TFSI** 12/08 - 75 -155 kW	**12-224463**	**12-224470**	VA: without ball bearing HA: without ball bearing
B4	**1.6, 1.8 T, 1.8 TSI, 2.0 TDI, 2.0 TFSI** 12/08 - 75 -155 kW	**19-158945**	**19-158952**	with standard chassis
B4	**1.6, 1.8 T, 1.8 TSI, 2.0 TDI, 2.0 TFSI** 12/08 - 75 -155 kW	**19-164472**	**19-164489**	with sports suspension
B6 Sport	**1.6, 1.8 T, 1.8 TSI, 2.0 TDI, 2.0 TFSI** 12/08 - 75 -155 kW	**24-119788**	**24-119795**	with standard chassis
B8	**1.6, 1.8 T, 1.8 TSI, 2.0 TDI, 2.0 TFSI** 12/08 - 75 -155 kW	**24-119818**	**24-119825**	with sports suspension
B12 PK	**1.6, 1.8 T, 1.8 TSI, 2.0 TFSI** 12/08 - 75 -155 kW	**46-182388**		without ride height adjustment; Conditions see certificates VA: lowering (expertise): 30-35 mm; axle load to: 1090 kg HA: lowering (expertise): 25-30 mm; axle load to: 1130 kg
B12 PK	**2.0 TDI, 2.0 TFSI** 12/08 - 88 -155 kW	**46-182395**		without ride height adjustment; Conditions see certificates VA: lowering (expertise): 30-35 mm; axle load to: 1165 kg HA: lowering (expertise): 25-30 mm; axle load to: 1130 kg
B12 SL	**1.6, 1.8 T, 1.8 TSI, 2.0 TFSI** 12/08 - 75 -155 kW	**46-188601**		without ride height adjustment; Conditions see certificates VA: lowering (expertise): 45 mm; axle load to: 1090 kg HA: lowering (expertise): 30 mm; axle load to: 1135 kg
B12 SL	**2.0 TDI, 2.0 TFSI** 12/08 - 88 -155 kW	**46-188618**		without ride height adjustment; Conditions see certificates VA: lowering (expertise): 45 mm; axle load to: 1140 kg HA: lowering (expertise): 30 mm; axle load to: 1135 kg
B14	**1.6, 1.8 T, 1.8 TSI, 2.0 TDI, 2.0 TFSI** 12/08 - 75 -155 kW	**47-169289**		Conditions see certificates VA: lowering (expertise): 30-60 mm; axle load to: 1250 kg HA: lowering (expertise): 20-50 mm; axle load to: 1170 kg
B16 PSS9	**1.6, 1.8 T, 1.8 TSI, 2.0 TDI, 2.0 TFSI** 12/08 - 75 -155 kW	**48-169301**		Conditions see certificates VA: lowering (expertise): 30-60 mm; axle load to: 1250 kg HA: lowering (expertise): 20-50 mm; axle load to: 1170 kg

SEAT EXEO ST (3R5)

B1	**1.6, 1.8 T, 1.8 TSI, 2.0 TDI, 2.0 TFSI** 06/09 - 75 -155 kW	**12-224463**	**12-224470**	VA: without ball bearing HA: without ball bearing
B4	**1.6, 1.8 T, 1.8 TSI, 2.0 TDI, 2.0 TFSI** 06/09 - 75 -155 kW	**19-158945**	**19-158952**	with standard chassis
B4	**1.6, 1.8 T, 1.8 TSI, 2.0 TDI, 2.0 TFSI** 06/09 - 75 -155 kW	**19-164472**	**19-164489**	with sports suspension
B6 Sport	**1.6, 1.8 T, 1.8 TSI, 2.0 TDI, 2.0 TFSI** 06/09 - 75 -155 kW	**24-119788**	**24-119795**	with standard chassis
B8	**1.6, 1.8 T, 1.8 TSI, 2.0 TDI, 2.0 TFSI** 06/09 - 75 -155 kW	**24-119818**	**24-119825**	
B12 PK	**1.6, 1.8 T, 1.8 TSI, 2.0 TFSI** 06/09 - 75 -155 kW	**46-182388**		without ride height adjustment; Conditions see certificates VA: lowering (expertise): 30 mm; axle load to: 1090 kg HA: lowering (expertise): 30 mm; axle load to: 1130 kg
B12 PK	**2.0 TDI, 2.0 TFSI** 06/09 - 88 -155 kW	**46-182395**		without ride height adjustment; Conditions see certificates VA: lowering (expertise): 30 mm; axle load to: 1165 kg HA: lowering (expertise): 30 mm; axle load to: 1130 kg
B12 SL	**1.6, 1.8 T, 1.8 TSI, 2.0 TFSI** 06/09 - 75 -155 kW	**46-188601**		without ride height adjustment; Conditions see certificates VA: lowering (expertise): 45 mm; axle load to: 1090 kg HA: lowering (expertise): 40 mm; axle load to: 1135 kg
B12 SL	**2.0 TDI, 2.0 TFSI** 06/09 - 88 -155 kW	**46-188618**		without ride height adjustment; Conditions see certificates VA: lowering (expertise): 45 mm; axle load to: 1140 kg HA: lowering (expertise): 40 mm; axle load to: 1135 kg
B14	**1.6, 1.8 T, 1.8 TSI, 2.0 TDI, 2.0 TFSI** 06/09 - 75 -155 kW	**47-169289**		Conditions see certificates VA: lowering (expertise): 30-60 mm; axle load to: 1250 kg HA: lowering (expertise): 20-50 mm; axle load to: 1170 kg

SEAT

SEAT EXEO ST (3R5)

B16 PSS9	**1.6, 1.8 T, 1.8 TSI, 2.0 TDI, 2.0 TFSI** 06/09 - 75 -155 kW	**48-169301**		Conditions see certificates VA: lowering (expertise): 30-60 mm; axle load to: 1250 kg HA: lowering (expertise): 20-50 mm; axle load to: 1170 kg

SEAT FURA (025A)

B3	**0.9** 01/82 - 12/86 29 -33 kW	**36-160730**		with standard chassis

SEAT IBIZA I (021A)

B4	**0.9, 1.7, 1.7 D** 08/90 - 05/93 29 -76 kW	**22-041180** **11-101291** SP	*22-040763*	
B4	**0.9, 1.2, 1.2 i, 1.5, 1.5 i, 1.5 i CAT, 1.7 D** 09/89 - 12/93 32 -74 kW	**22-041180** **11-101291** SP	*22-040763*	
B4	**1.2, 1.5, 1.7 D** 06/84 - 07/86 40 -63 kW	*22-040923*	*22-040763*	
B4	**1.2, 1.5, 1.7 D** 08/86 - 08/89 40 -63 kW	**11-101307** SP	*22-040763*	

SEAT IBIZA II (6K1)

B1	**1.0, 1.0 i, 1.3 i, 1.4, 1.4 i, 1.4 i 16V, 1.6 i, 1.8 i, 1.8 i 16V, 1.9 D, 1.9 SDI, 1.9 TD, 1.9 TDI, 2.0 i, 2.0 i 16V** CH-Nr. - 08/99 33 -110 kW	**12-117659**		CH.Nr.: R 080001 ->; for vehicles with "Plusachse" only VA: with ball bearing
B1	**1.0, 1.0 i, 1.3 i, 1.4, 1.4 i, 1.4 i 16V, 1.6 i, 1.8 i** 03/93 - 08/99 33 -74 kW	**12-117963**	**12-117239**	for vehicles with "Basisachse" only VA: -> CH.Nr.: R0800000
B2	**1.0, 1.3 i, 1.4, 1.4 i, 1.6 i, 1.8 i, 1.9 D, 1.9 TD** 03/93 - CH-Nr. 33 -66 kW	**17-047142** **11-101291** SP	**15-106377** **11-101352** SP	-> CH.Nr.: R080000; for vehicles with "Basisachse" only
B2	**1.0, 1.0 i, 1.3 i, 1.4, 1.4 i, 1.4 i 16V, 1.6 i, 1.8 i, 1.9 D, 1.9 SDI, 1.9 TD, 1.9 TDI** CH-Nr. - 08/99 33 -81 kW	**17-104029** **11-101291** SP	**15-106377** **11-101352** SP	CH.Nr.: R080001 ->; for vehicles with "Plusachse" only
B3	**1.0 i, 1.4 i 16V, 1.6 i** 04/96 - 08/99 37 -74 kW	**36-131112**	**36-130900**	with standard chassis
B3	**2.0 i 16V** 08/96 - 08/99 110 kW	**36-130825**	**36-130900**	with standard chassis
B3	**1.9 SDI, 1.9 TDI** 08/96 - 08/99 47 -81 kW	**36-130818**	**36-130900**	with standard chassis
B4	**1.0, 1.3 i, 1.4, 1.4 i, 1.6 i, 1.8 i, 1.9 D, 1.9 TD, 2.0 i** 03/93 - CH-Nr. 33 -85 kW	**22-041142** **11-101291** SP	**19-028651** **11-101352** SP	-> CH.Nr.: R080000; for vehicles with "Basisachse" only
B4	**1.0, 1.0 i, 1.3 i, 1.4, 1.4 i, 1.4 i 16V, 1.6 i, 1.8 i, 1.9 D, 1.9 SDI, 1.9 TD, 1.9 TDI, 2.0 i** CH-Nr. - 08/99 33 -85 kW	**22-045010** **11-101291** SP	**19-028651** **11-101352** SP	CH.Nr.: R080001 ->; for vehicles with "Plusachse" only
B4	**1.8 i 16V, 2.0 i 16V** 11/93 - CH-Nr. 95 -110 kW	**22-041142** **11-101291** SP	*19-029399*	-> CH.Nr.: R082400
B4	**1.8 i 16V, 2.0 i 16V** CH-Nr. - 08/99 95 -110 kW	**22-045027** **11-101291** SP		CH.Nr.: R082400 ->
B6 Sport	**1.0, 1.0 i, 1.3 i, 1.4, 1.4 i, 1.4 i 16V, 1.6 i, 1.8 i, 1.8 i 16V, 1.9 D, 1.9 SDI, 1.9 TD, 1.9 TDI, 2.0 i, 2.0 i 16V** 03/93 - 08/99 33 -110 kW	*22-181657* **11-101291** SP	**24-021227** **11-101352** SP	VA: twin-tube

SEAT				
SEAT IBIZA II (6K1)				
B6 Sport	**1.0, 1.0 i, 1.3 i, 1.4, 1.4 i, 1.4 i 16V, 1.6 i, 1.8 i, 1.8 i 16V, 1.9 D, 1.9 SDI, 1.9 TD, 1.9 TDI, 2.0 i, 2.0 i 16V** 03/93 - 08/99 33 -110 kW	**35-043959**	**24-021227** **11-101352** SP	VA: mono-tube
B6 Sport	**1.0, 1.0 i, 1.3 i, 1.4, 1.4 i, 1.4 i 16V, 1.6 i, 1.8 i, 1.8 i 16V, 1.9 D, 1.9 SDI, 1.9 TD, 1.9 TDI, 2.0 i, 2.0 i 16V** 03/93 - 08/99 33 -110 kW	**35-043911** **11-101291** SP	**24-021227** **11-101352** SP	for vehicles with "Plusachse" only; twin-tube
B6 Sport	**1.0, 1.0 i, 1.3 i, 1.4, 1.4 i, 1.4 i 16V, 1.6 i, 1.8 i, 1.8 i 16V, 1.9 D, 1.9 SDI, 1.9 TD, 1.9 TDI, 2.0 i, 2.0 i 16V** 03/93 - 08/99 33 -110 kW	**35-043911**	**24-021227** **11-101352** SP	for vehicles with "Plusachse" only; mono-tube
B8	**1.0, 1.0 i, 1.3 i, 1.4, 1.4 i, 1.4 i 16V, 1.6 i, 1.8 i, 1.8 i 16V, 1.9 D, 1.9 SDI, 1.9 TD, 1.9 TDI, 2.0 i, 2.0 i 16V** 03/93 - 08/99 33 -110 kW	*22-003737* **11-101291** SP	**24-021197** **11-101352** SP	VA: twin-tube
B8	**1.0, 1.0 i, 1.3 i, 1.4, 1.4 i, 1.4 i 16V, 1.6 i, 1.8 i, 1.8 i 16V, 1.9 D, 1.9 SDI, 1.9 TD, 1.9 TDI, 2.0 i, 2.0 i 16V** 03/93 - 08/99 33 -110 kW	**35-043966**	**24-021197** **11-101352** SP	VA: mono-tube
B8	**1.0, 1.0 i, 1.3 i, 1.4, 1.4 i, 1.4 i 16V, 1.6 i, 1.8 i, 1.8 i 16V, 1.9 D, 1.9 SDI, 1.9 TD, 1.9 TDI, 2.0 i, 2.0 i 16V** 03/93 - 08/99 33 -110 kW	**35-043928**	**24-021197** **11-101352** SP	for vehicles with "Plusachse" only VA: mono-tube
B10	**1.0, 1.0 i, 1.3 i, 1.4, 1.4 i, 1.4 i 16V, 1.6 i, 1.8 i, 1.8 i 16V, 2.0 i** 03/93 - 08/99 33 -95 kW	**46-111975**		Conditions see certificates VA: lowering (expertise): 60 mm HA: lowering (expertise): 40 mm
B14	**1.0, 1.0 i, 1.3 i, 1.4, 1.4 i, 1.4 i 16V, 1.6 i, 1.8 i, 1.8 i 16V, 1.9 D, 1.9 SDI, 1.9 TD, 1.9 TDI, 2.0 i, 2.0 i 16V** 03/93 - 08/99 33 -110 kW	**47-080720**		Conditions see certificates VA: lowering (expertise): 30-50 mm; axle load to: 850 kg HA: lowering (expertise): 30-50 mm; axle load to: 780 kg
B16 PSS9	**1.0, 1.0 i, 1.3 i, 1.4, 1.4 i, 1.4 i 16V, 1.6 i, 1.8 i, 1.8 i 16V, 1.9 D, 1.9 SDI, 1.9 TD, 1.9 TDI, 2.0 i, 2.0 i 16V** 03/93 - 08/99 33 -110 kW	**48-080736**		Conditions see certificates VA: lowering (expertise): 30-50 mm; axle load to: 850 kg HA: lowering (expertise): 30-50 mm; axle load to: 780 kg
SEAT IBIZA III (6K1)				
B1	**1.0, 1.0 16V, 1.4, 1.4 16V, 1.6, 1.8 T 20V Cupra, 1.9 SDI, 1.9 TDI** 08/99 - 02/02 37 -115 kW	**12-225323**	**12-117840**	VA: with ball bearing
B2	**1.0, 1.0 16V, 1.4, 1.4 16V, 1.6, 1.9 SDI, 1.9 TDI** 08/99 - 02/02 37 -81 kW	**17-104029** **11-101291** SP	**15-106377** **11-101352** SP	with standard chassis
B3	**1.0, 1.4** 08/99 - 02/02 37 -50 kW	**37-131401**	**36-134083**	with standard chassis
B3	**1.0, 1.0 16V, 1.4** 08/99 - 02/02 37 -51 kW	**37-131418**	**36-134106**	with standard chassis; Heavy Duty Version .
B3	**1.4 16V** 08/99 - 02/02 55 -74 kW	**37-131401**	**36-134106**	with standard chassis
B3	**1.4 16V** 08/99 - 02/02 55 -74 kW	**37-131418**		with standard chassis; Heavy Duty Version .
B3	**1.6, 1.9 SDI, 1.9 TDI** 08/99 - 02/02 50 -81 kW	**37-131418**	**36-134106**	with standard chassis
B4	**1.0, 1.0 16V, 1.4, 1.4 16V, 1.6, 1.9 SDI, 1.9 TDI** 08/99 - 02/02 37 -81 kW	**22-045010** **11-101291** SP	**19-028651** **11-101352** SP	with standard chassis

S

BILSTEIN®

SEAT

SEAT IBIZA III (6K1)

B6 Sport	**1.0, 1.0 16V, 1.4, 1.4 16V, 1.6, 1.9 SDI, 1.9 TDI** 08/99 - 02/02 37 -81 kW	**35-043911**	**24-026192** **11-101352** SP	
B6 Sport	**1.8 T 20V Cupra** 07/00 - 02/02 115 kW	**35-043911**	**24-026208** **11-101352** SP	
B8	**1.0, 1.0 16V, 1.4, 1.4 16V, 1.6, 1.9 SDI, 1.9 TDI** 08/99 - 02/02 37 -81 kW	**35-043928**	**24-026208** **11-101352** SP	
B8	**1.8 T 20V Cupra** 07/00 - 02/02 115 kW	**35-043928**	**24-026208** **11-101352** SP	
B12 PK	**1.0, 1.0 16V, 1.4, 1.4 16V, 1.6** 08/99 - 02/02 37 -74 kW	**46-182463**		Conditions see certificates VA: lowering (expertise): 25 mm; axle load to: 850 kg HA: lowering (expertise): 20-25 mm; axle load to: 810 kg
B12 PK	**1.8 T 20V Cupra, 1.9 SDI, 1.9 TDI** 08/99 - 02/02 50 -115 kW	**46-182470**		Conditions see certificates VA: lowering (expertise): 25 mm; axle load to: 900 kg HA: lowering (expertise): 20-25 mm; axle load to: 810 kg
B14	**1.0, 1.0 16V, 1.4, 1.4 16V, 1.6, 1.8 T 20V Cupra, 1.9 SDI, 1.9 TDI** 08/99 - 02/02 37 -115 kW	**47-081888**		Conditions see certificates VA: lowering (expertise): 30-50 mm; axle load to: 900 kg HA: lowering (expertise): 30-50 mm; axle load to: 780 kg
B16 PSS9	**1.0, 1.0 16V, 1.4, 1.4 16V, 1.6, 1.8 T 20V Cupra, 1.9 SDI, 1.9 TDI** 08/99 - 02/02 37 -115 kW	**48-081894**		Conditions see certificates VA: lowering (expertise): 30-50 mm; axle load to: 900 kg HA: lowering (expertise): 30-50 mm; axle load to: 780 kg

SEAT IBIZA IV (6L1)

B1	**1.2, 1.2 12V, 1.4 16V, 1.4 TDI, 1.6, 1.6 16V, 1.8 T Cupra R, 1.8 T FR, 1.9 SDI, 1.9 TDI, 1.9 TDI Cupra R, 2.0** 04/02 - 11/09 44 -132 kW	**12-117741**	**12-117840**	VA: without ball bearing
B3	**1.2, 1.2 12V, 1.4 16V, 1.6, 1.6 16V** 11/06 - 11/09 44 -77 kW	**37-160692**	**36-160716**	with standard chassis
B3	**1.4 TDI, 1.9 SDI, 1.9 TDI, 2.0** 04/02 - 11/09 47 -96 kW		**36-160716**	with standard chassis
B4	**1.2, 1.2 12V, 1.4 16V, 1.4 TDI, 1.6, 1.6 16V, 1.9 SDI, 1.9 TDI, 2.0** 04/02 - 11/09 44 -96 kW	**22-105813** **11-101321** SP	**19-109572** **11-106470** SP	
B6 Sport	**1.2, 1.2 12V, 1.4 16V, 1.4 TDI, 1.6, 1.6 16V, 1.8 T FR, 1.9 SDI, 1.9 TDI, 2.0** 04/02 - 11/09 44 -110 kW	**35-052173**	**24-067898** **11-106470** SP	
B6 Sport	**1.8 T Cupra R, 1.9 TDI Cupra R** 01/04 - 02/08 118 -132 kW	**35-052180**	**24-067904** **11-106470** SP	
B8	**1.2, 1.2 12V, 1.4 16V, 1.4 TDI, 1.6, 1.6 16V, 1.8 T FR, 1.9 SDI, 1.9 TDI, 2.0** 04/02 - 11/09 44 -110 kW	**35-052180**	**24-067904** **11-106470** SP	
B12 PK	**1.2, 1.2 12V, 1.4 16V, 1.6, 1.6 16V** 11/06 - 11/09 44 -77 kW	**46-182449**		Conditions see certificates VA: lowering (expertise): 30 mm; axle load to: 860 kg HA: lowering (expertise): 20-25 mm; axle load to: 860 kg
B12 PK	**1.4 TDI, 1.8 T FR, 1.9 SDI, 1.9 TDI** 02/02 - 11/09 47 -110 kW	**46-182456**		Conditions see certificates VA: lowering (expertise): 30 mm; axle load to: 960 kg HA: lowering (expertise): 20-25 mm; axle load to: 860 kg
B14	**1.2, 1.2 12V, 1.4 16V, 1.4 TDI, 1.6, 1.6 16V, 1.8 T Cupra R, 1.8 T FR, 1.9 SDI, 1.9 TDI, 1.9 TDI Cupra R, 2.0** 04/02 - 11/09 44 -132 kW	**47-146914**		Conditions see certificates VA: lowering (expertise): 30-50 mm; axle load to: 960 kg HA: lowering (expertise): 30-45 mm; axle load to: 835 kg

S

SEAT

SEAT IBIZA IV (6L1)

B16 PSS9	**1.2, 1.2 12V, 1.4 16V, 1.4 TDI, 1.6, 1.6 16V, 1.8 T Cupra R, 1.8 T FR, 1.9 SDI, 1.9 TDI, 1.9 TDI Cupra R, 2.0** 04/02 - 11/09 44 -132 kW	**48-146852**		Conditions see certificates VA: lowering (expertise): 30-50 mm; axle load to: 960 kg HA: lowering (expertise): 30-45 mm; axle load to: 835 kg

SEAT IBIZA V (6J5)

B1	**1.2, 1.2 TDI, 1.4 TDI, 1.4 TSI, 1.6, 1.6 LPG, 1.6 TDI, 1.9 TDI, 2.0 TDI** 03/08 - 44 -110 kW	**12-116966**	**12-226429**	VA: with ball bearing HA: CH.Nr.: 6J-B-059761 ->; for PR number: UA2/UB1
B1	**1.2** 03/08 - 51 kW	**12-116966**	**12-226429**	Engine Code: BZG VA: with ball bearing HA: CH.Nr.: 6J-B-059761 ->; for PR number: UA2/UB1
B1	**1.4** 03/08 - 63 kW	**12-116966**	**12-226429**	Engine Code: BXW VA: with ball bearing HA: CH.Nr.: 6J-B-059761 ->; for PR number: UA2/UB1
B1	**1.6 TDI** 05/09 - 77 kW	**12-116966**	**12-226429**	Engine Code: CAYC VA: with ball bearing HA: CH.Nr.: 6J-B-059761 ->; for PR number: UA2/UB1
B4	**1.2, 1.2 TDI, 1.2 TSI, 1.4, 1.4 TDI, 1.4 TSI, 1.6, 1.6 LPG, 1.6 TDI, 1.9 TDI, 2.0, 2.0 TDI** 10/08 - 44 -110 kW	**22-183705**	**19-109572**	
B6 Sport	**1.2, 1.2 TDI, 1.2 TSI, 1.4, 1.4 TDI, 1.4 TSI, 1.6, 1.6 LPG, 1.6 TDI, 1.9 TDI, 2.0, 2.0 TDI** 10/08 - 44 -110 kW	**35-168560**	**24-067898** **11-106470** SP	
B8	**1.2, 1.2 TDI, 1.2 TSI, 1.4, 1.4 TDI, 1.4 TSI, 1.6, 1.6 LPG, 1.6 TDI, 1.9 TDI, 2.0, 2.0 TDI** 10/08 - 44 -110 kW	**35-168577**	**24-067904** **11-106470** SP	
B12 PK	**1.2, 1.2 TDI, 1.2 TSI, 1.4, 1.4 TDI, 1.4 TSI, 1.6, 1.6 LPG, 1.6 TDI** 05/09 - 44 -110 kW	**46-182425**		Conditions see certificates VA: lowering (expertise): 25 mm; axle load to: 860 kg HA: without ride height adjustment; lowering (expertise): 25 mm; axle load to: 820 kg
B12 PK	**1.2 TDI, 1.2 TSI, 1.4 TDI, 1.4 TSI, 1.6, 1.6 LPG, 1.6 TDI, 1.9 TDI, 2.0** 10/08 - 55 -110 kW	**46-182432**		Conditions see certificates VA: lowering (expertise): 25 mm; axle load to: 940 kg HA: without ride height adjustment; lowering (expertise): 25 mm; axle load to: 820 kg
B14	**1.2, 1.2 TDI, 1.2 TSI, 1.4, 1.4 TDI, 1.4 TSI, 1.6, 1.6 LPG, 1.6 TDI, 1.9 TDI, 2.0, 2.0 TDI** 10/08 - 44 -110 kW	**47-168091**		Conditions see certificates VA: lowering (expertise): 35-50 mm; axle load to: 950 kg HA: lowering (expertise): 30-45 mm; axle load to: 820 kg
B16 PSS9	**1.2, 1.2 TDI, 1.2 TSI, 1.4, 1.4 TDI, 1.4 TSI, 1.6, 1.6 LPG, 1.6 TDI, 1.9 TDI, 2.0, 2.0 TDI** 10/08 - 44 -110 kW	**48-168229**		Conditions see certificates VA: lowering (expertise): 35-50 mm; axle load to: 950 kg HA: lowering (expertise): 30-45 mm; axle load to: 820 kg

SEAT IBIZA V SPORTCOUPE (6J1)

B1	**1.2, 1.2 TDI, 1.4, 1.4 TDI, 1.4 TSI, 1.6, 1.6 LPG, 1.6 TDI, 1.9 TDI, 2.0 TDI** 07/08 - 44 -132 kW	**12-116966**	**12-226429**	VA: with ball bearing HA: CH.Nr.: 6J-B-059761 ->; for PR number: UA2/UB1
B1	**1.2** 07/08 - 51 kW	**12-116966**	**12-226429**	Engine Code: BZG VA: with ball bearing HA: CH.Nr.: 6J-B-059761 ->; for PR number: UA2/UB1
B1	**1.6 TDI** 05/09 - 77 kW	**12-116966**	**12-226429**	Engine Code: CAYC VA: with ball bearing HA: CH.Nr.: 6J-B-059761 ->
B4	**1.2, 1.2 TDI, 1.2 TSI, 1.4, 1.4 TDI, 1.4 TSI, 1.6, 1.6 LPG, 1.6 TDI, 1.9 TDI, 2.0, 2.0 TDI** 10/08 - 44 -132 kW	**22-183705**	**19-109572**	

S

SEAT				
SEAT IBIZA V SPORTCOUPE (6J1)				
B6 Sport	**1.2, 1.2 TDI, 1.2 TSI, 1.4, 1.4 TDI, 1.4 TSI, 1.6, 1.6 LPG, 1.6 TDI, 1.9 TDI, 2.0, 2.0 TDI** 10/08 - 44 -132 kW	**35-168560**	**24-067898** **11-106470** SP	
B8	**1.2, 1.2 TDI, 1.2 TSI, 1.4, 1.4 TDI, 1.4 TSI, 1.6, 1.6 LPG, 1.6 TDI, 1.9 TDI, 2.0, 2.0 TDI** 10/08 - 44 -132 kW	**35-168577**	**24-067904** **11-106470** SP	
B12 PK	**1.2, 1.2 TDI, 1.2 TSI, 1.4, 1.4 TDI, 1.4 TSI, 1.6, 1.6 LPG, 1.6 TDI** 05/09 - 44 -132 kW	**46-182425**		Conditions see certificates VA: lowering (expertise): 25 mm; axle load to: 860 kg HA: without ride height adjustment; lowering (expertise): 25 mm; axle load to: 820 kg
B12 PK	**1.2 TDI, 1.2 TSI, 1.4 TDI, 1.4 TSI, 1.6, 1.6 LPG, 1.6 TDI, 1.9 TDI, 2.0** 10/08 - 55 -132 kW	**46-182432**		Conditions see certificates VA: lowering (expertise): 25 mm; axle load to: 940 kg HA: without ride height adjustment; lowering (expertise): 25 mm; axle load to: 820 kg
B14	**1.2, 1.2 TDI, 1.2 TSI, 1.4, 1.4 TDI, 1.4 TSI, 1.6, 1.6 LPG, 1.6 TDI, 1.9 TDI, 2.0, 2.0 TDI** 10/08 - 44 -132 kW	**47-168091**		Conditions see certificates VA: lowering (expertise): 35-50 mm; axle load to: 950 kg HA: lowering (expertise): 30-45 mm; axle load to: 820 kg
B16 PSS9	**1.2, 1.2 TDI, 1.2 TSI, 1.4, 1.4 TDI, 1.4 TSI, 1.6, 1.6 LPG, 1.6 TDI, 1.9 TDI, 2.0, 2.0 TDI** 10/08 - 44 -132 kW	**48-168229**		Conditions see certificates VA: lowering (expertise): 35-50 mm; axle load to: 950 kg HA: lowering (expertise): 30-45 mm; axle load to: 820 kg
SEAT IBIZA V ST (6J8)				
B1	**1.2, 1.2 TDI, 1.2 TSI, 1.4, 1.6 TDI** 03/10 - 44 -77 kW	**12-116966**	**12-226429**	VA: with ball bearing HA: CH.Nr.: 6J-B-059761 ->; for PR number: UA2/UB1
B4	**1.2, 1.2 TDI, 1.2 TSI, 1.4, 1.6 TDI** 03/10 - 44 -77 kW	**22-183705**	**19-109572**	
B6 Sport	**1.2, 1.2 TDI, 1.2 TSI, 1.4, 1.6 TDI** 03/10 - 44 -77 kW	**35-168560**	**24-067898** **11-106470** SP	
B8	**1.2, 1.2 TDI, 1.2 TSI, 1.4, 1.6 TDI** 03/10 - 44 -77 kW	**35-168577**	**24-067904** **11-106470** SP	
B12 PK	**1.2, 1.2 TDI, 1.2 TSI, 1.4, 1.6 TDI** 03/10 - 44 -77 kW	**46-182425**		Conditions see certificates VA: lowering (expertise): 25 mm; axle load to: 860 kg HA: without ride height adjustment; lowering (expertise): 25 mm; axle load to: 820 kg
B12 PK	**1.2, 1.2 TDI, 1.2 TSI, 1.4, 1.6 TDI** 03/10 - 44 -77 kW	**46-182432**		Conditions see certificates VA: lowering (expertise): 25 mm; axle load to: 940 kg HA: without ride height adjustment; lowering (expertise): 25 mm; axle load to: 820 kg
B14	**1.2, 1.2 TDI, 1.2 TSI, 1.4, 1.6 TDI** 03/10 - 44 -77 kW	**47-168091**		Conditions see certificates VA: lowering (expertise): 35-50 mm; axle load to: 950 kg HA: lowering (expertise): 30-45 mm; axle load to: 820 kg
B16 PSS9	**1.2, 1.2 TDI, 1.2 TSI, 1.4, 1.6 TDI** 03/10 - 44 -77 kW	**48-168229**		Conditions see certificates VA: lowering (expertise): 35-50 mm; axle load to: 950 kg HA: lowering (expertise): 30-45 mm; axle load to: 820 kg
SEAT INCA (6K9)				
B1	**1.4 16V, 1.4 i, 1.6, 1.6 i, 1.7 D, 1.9 D, 1.9 SDI, 1.9 TDI** 09/96 - 06/03 42 -70 kW	**12-117659**		VA: with ball bearing
B2	**1.4 16V, 1.4 i, 1.6, 1.6 i** 06/97 - 06/03 44 -70 kW	**17-106405** **11-101307** SP	**15-106384**	
B2	**1.7 D, 1.9 D, 1.9 SDI, 1.9 TDI** 11/95 - 06/03 42 -66 kW	**17-104029** **11-101291** SP	**15-106384**	

S

SEAT				
SEAT INCA (6K9)				
B3	**1.4 16V, 1.4 i, 1.6 i** 06/97 - 06/03 44 -55 kW	36-203130		with standard chassis
B3	**1.7 D, 1.9 D, 1.9 SDI** 11/95 - 06/03 42 -47 kW	36-203130		with standard chassis
B4	**1.4 16V, 1.4 i, 1.6, 1.6 i** 06/97 - 06/03 44 -70 kW	**22-044761** **11-101307** SP	**19-106397**	
B4	**1.7 D, 1.9 D, 1.9 SDI, 1.9 TDI** 11/95 - 06/03 42 -66 kW	**22-045010** **11-101291** SP	**19-106397**	
SEAT LEON (1M1)				
B3	**1.4 16V, 1.6, 1.6 16 V, 1.9 SDI, 1.9 TDI** 11/99 - 06/06 50 -110 kW	**37-134129**	**36-134113**	with standard chassis
B3	**1.4 16V, 1.6, 1.6 16 V, 1.8 20V, 1.8 20V T, 1.8 20V T 4, 1.8 T Cupra R, 1.9 SDI, 1.9 TDI** 11/99 - 06/06 50 -165 kW		**36-131297**	with standard chassis; Heavy Duty Version .
B3	**1.8 20V, 1.8 20V T, 1.8 20V T 4, 1.8 Turbo 4x4, 1.9 TDI** 11/99 - 06/06 66 -154 kW	**37-131425**	**36-134113**	with standard chassis
B4	**1.4 16V, 1.6, 1.6 16 V, 1.8 20V, 1.8 20V T, 1.9 SDI, 1.9 TDI, 2.3 VR5, 2.8** 11/99 - 06/06 50 -150 kW	**22-045744** **11-103455** SP	**19-029429** **11-115755** SP	with standard chassis
B4	**1.4 16V, 1.6, 1.6 16 V, 1.8 20V, 1.8 20V T, 1.9 SDI, 1.9 TDI, 2.3 VR5, 2.8** 11/99 - 06/06 50 -150 kW	**22-045751** **11-103455** SP	**19-029177** **11-115755** SP	with sports suspension
B4	**1.4 16V, 1.6, 1.6 16 V, 1.9 SDI, 2.3 VR5, 2.8** 11/99 - 06/06 50 -150 kW	**22-045744** **11-103455** SP	**19-140032** **11-115755** SP	with off-road suspension
B4	**1.8 20V T 4, 1.8 Turbo 4x4, 1.9 TDI Syncro** 11/99 - 06/06 110 -154 kW	**22-145550**	**19-145570**	with standard chassis
B6 Sport	**1.4 16V, 1.6, 1.6 16 V, 1.8 20V, 1.8 20V T, 1.9 SDI, 1.9 TDI, 2.3 VR5, 2.8** 11/99 - 06/06 50 -150 kW	**35-044079**	**24-026239** **11-115755** SP	VA: Mono Tube Upside Down
B6 Sport	**1.8 20V T 4, 1.8 Turbo 4x4, 1.9 TDI Syncro** 11/99 - 06/06 110 -154 kW	**35-046370**	**24-060349**	
B6 Sport	**1.8 T Cupra R** 02/02 - 06/06 154 kW	**35-046370**	**24-026239** **11-115755** SP	
B8	**1.4 16V, 1.6, 1.6 16 V, 1.8 20V, 1.8 20V T, 1.9 SDI, 1.9 TDI, 2.3 VR5, 2.8** 11/99 - 06/06 50 -150 kW	**35-044086**	**24-026246** **11-115755** SP	VA: Mono Tube Upside Down
B8	**1.8 20V T 4, 1.8 Turbo 4x4, 1.9 TDI Syncro, 2.8 Cupra 4** 11/99 - 06/06 110 -154 kW	**35-046387**	**24-060356**	VA: Mono Tube Upside Down
B8	**1.8 T Cupra R** 02/02 - 06/06 154 -165 kW	**35-046387**	**24-026246** **11-115755** SP	
B10	**1.4 16V, 1.6, 1.6 16 V, 1.8 20V, 1.8 20V T, 1.9 SDI, 1.9 TDI, 2.3 VR5, 2.8** 11/99 - 06/06 50 -150 kW	**46-111890**		Conditions see certificates VA: lowering (expertise): 50 mm; axle load to: 980 kg HA: lowering (expertise): 40 mm
B10	**1.4 16V, 1.6, 1.6 16 V, 1.8 20V, 1.8 20V T, 1.9 SDI, 1.9 TDI, 2.3 VR5, 2.8** 11/99 - 06/06 50 -150 kW	**46-111906**		Conditions see certificates VA: lowering (expertise): 50 mm; axle load from: 981 kg HA: lowering (expertise): 40 mm

S

SEAT			
SEAT LEON (1M1)			
B12 PK	**1.4 16V, 1.6, 1.6 16 V** 11/99 - 06/06 55 -77 kW	**46-182319**	Conditions see certificates VA: lowering (expertise): 30 mm; axle load to: 910 kg HA: without ride height adjustment; lowering (expertise): 20-25 mm; axle load to: 985 kg
B12 PK	**1.8 20V, 1.8 20V T, 1.9 SDI, 1.9 TDI** 11/99 - 06/06 50 -132 kW	**46-182326**	Conditions see certificates VA: lowering (expertise): 30 mm; axle load to: 982 kg HA: without ride height adjustment; lowering (expertise): 20-25 mm; axle load to: 985 kg
B12 PK	**1.8 T Cupra R** 02/02 - 06/06 154 -165 kW	**46-187994**	Conditions see certificates VA: lowering (expertise): 30 mm; axle load to: 982 kg HA: without ride height adjustment; lowering (expertise): 20-25 mm; axle load to: 985 kg
B12 PK	**1.9 SDI, 1.9 TDI** 11/99 - 06/06 50 -110 kW	**46-182333**	Conditions see certificates VA: lowering (expertise): 30 mm; axle load to: 1005 kg HA: without ride height adjustment; lowering (expertise): 20-25 mm; axle load to: 985 kg
B12 PK	**1.9 TDI Syncro, 2.8 Cupra 4** 02/01 - 06/06 110 -150 kW	**46-182302**	Conditions see certificates VA: lowering (expertise): 20-25 mm; axle load to: 1050 kg HA: without ride height adjustment; lowering (expertise): 20 mm; axle load to: 1070 kg
B12 SL	**1.4 16V, 1.6, 1.6 16 V** 11/99 - 06/06 55 -77 kW	**46-180254**	Conditions see certificates VA: lowering (expertise): 45-50 mm; axle load to: 950 kg HA: without ride height adjustment; lowering (expertise): 30 mm; axle load to: 1000 kg
B12 SL	**1.8 20V, 1.8 20V T, 1.9 SDI, 1.9 TDI** 11/99 - 06/06 50 -132 kW	**46-180261**	Conditions see certificates VA: lowering (expertise): 45-50 mm; axle load to: 1000 kg HA: without ride height adjustment; lowering (expertise): 30 mm; axle load to: 1000 kg
B12 SL	**1.8 T Cupra R** 02/02 - 06/06 154 -165 kW	**46-180278**	Conditions see certificates VA: lowering (expertise): 25-30 mm; axle load to: 1000 kg HA: without ride height adjustment; lowering (expertise): 10 mm; axle load to: 1000 kg
B14	**1.4 16V, 1.6, 1.6 16 V, 1.8 20V, 1.8 20V T, 1.9 SDI, 1.9 TDI, 2.3 VR5, 2.8** 11/99 - 06/06 50 -150 kW	**47-124851**	Spacers required for several wheel/tyre combinations; Conditions see certificates VA: lowering (expertise): 25-45 mm; axle load to: 1060 kg HA: lowering (expertise): 20-40 mm; axle load to: 1010 kg
B14	**1.8 20V T 4, 1.8 Turbo 4x4, 1.9 TDI Syncro, 2.8 Cupra 4** 11/99 - 06/06 110 -154 kW	**47-080416**	Conditions see certificates VA: lowering (expertise): 30-50 mm; axle load to: 1110 kg HA: lowering (expertise): 30-50 mm; axle load to: 1080 kg
B14	**1.8 T Cupra R** 02/02 - 06/06 154 -165 kW	**47-080478**	Conditions see certificates VA: lowering (expertise): 10-30 mm; axle load to: 1040 kg HA: lowering (expertise): 25-55 mm; axle load to: 825 kg
B16 PSS9	**1.4 16V, 1.6, 1.6 16 V, 1.8 20V, 1.8 20V T, 1.9 SDI, 1.9 TDI, 2.3 VR5, 2.8** 11/99 - 06/06 50 -150 kW	**48-080651**	Conditions see certificates VA: lowering (expertise): 25-45 mm; axle load to: 1060 kg HA: lowering (expertise): 20-40 mm; axle load to: 1010 kg
B16 PSS9	**1.8 20V T 4, 1.8 Turbo 4x4, 1.9 TDI Syncro, 2.8 Cupra 4** 11/99 - 06/06 110 -154 kW	**48-080422**	Conditions see certificates VA: lowering (expertise): 30-50 mm; axle load to: 1110 kg HA: lowering (expertise): 30-50 mm; axle load to: 1080 kg
B16 PSS9	**1.8 T Cupra R** 02/02 - 06/06 154 -165 kW	**48-080484**	Conditions see certificates VA: lowering (expertise): 10-30 mm; axle load to: 1040 kg HA: lowering (expertise): 25-55 mm; axle load to: 825 kg
SEAT LEON (1P1)			
B1	**1.2 TSI, 1.4 16V, 1.4 TSI, 1.6, 1.6 LPG, 1.6 TDI, 1.8 TSI, 1.9 TDI, 2.0 FSI, 2.0 TDI, 2.0 TDI 16V, 2.0 TFSI** 09/09 - 63 -195 kW	**12-224074**	**12-224081**	VA: with ball bearing HA: without ball bearing
B3	**1.2 TSI, 1.4 16V, 1.4 TSI, 1.6** 07/05 - 63 -92 kW	**37-133030**	**36-199549**	with standard chassis
B3	**1.6 TDI, 1.8 TSI, 2.0 FSI** 07/05 - 66 -118 kW	**37-147747**	**36-199549**	with standard chassis
B3	**1.9 TDI, 2.0 TDI, 2.0 TDI 16V, 2.0 TFSI** 11/06 - 66 -195 kW	**37-147747**	**36-199532**	with standard chassis

S

SEAT

SEAT LEON (1P1)

B4	**1.2 TSI, 1.4 16V, 1.4 TSI, 1.6, 1.6 LPG, 1.6 TDI, 1.8 TSI, 1.9 TDI, 2.0 FSI, 2.0 TDI, 2.0 TDI 16V, 2.0 TFSI** 09/09 - 63 -195 kW	**22-131607**	**19-127439**	with standard chassis VA: Øa: 50 mm
B4	**1.2 TSI, 1.4 16V, 1.4 TSI, 1.6, 1.6 LPG, 1.6 TDI, 1.8 TSI, 1.9 TDI, 2.0 FSI, 2.0 TDI, 2.0 TDI 16V, 2.0 TFSI** 09/09 - 63 -195 kW	**22-131614**	**19-127439**	with standard chassis VA: Øa: 55 mm
B4	**1.2 TSI, 1.4 16V, 1.4 TSI, 1.6, 1.6 LPG, 1.6 TDI, 1.8 TSI, 1.9 TDI, 2.0 FSI, 2.0 TDI, 2.0 TDI 16V, 2.0 TFSI** 09/09 - 63 -195 kW	**22-139184**	**19-127439**	with sports suspension VA: Øa: 50 mm
B4	**1.2 TSI, 1.4 16V, 1.4 TSI, 1.6, 1.6 LPG, 1.6 TDI, 1.8 TSI, 1.9 TDI, 2.0 FSI, 2.0 TDI, 2.0 TDI 16V, 2.0 TFSI** 09/09 - 63 -195 kW	**22-139191**	**19-127439**	with sports suspension VA: Øa: 55 mm
B6 Sport	**1.2 TSI, 1.4 16V, 1.4 TSI, 1.6, 1.6 LPG, 1.6 TDI, 1.8 TSI, 1.9 TDI, 2.0 FSI, 2.0 TDI, 2.0 TDI 16V, 2.0 TFSI** 09/09 - 63 -195 kW	**35-113751**	**24-172936**	outside diameter strut 50 mm VA: Øa: 50 mm
B6 Sport	**1.2 TSI, 1.4 16V, 1.4 TSI, 1.6, 1.6 LPG, 1.6 TDI, 1.8 TSI, 1.9 TDI, 2.0 FSI, 2.0 TDI, 2.0 TDI 16V, 2.0 TFSI** 09/09 - 63 -195 kW	**35-108177**	**24-172936**	outside diameter strut 55 mm VA: Øa: 55 mm
B8	**1.2 TSI, 1.4 16V, 1.4 TSI, 1.6, 1.6 LPG, 1.6 TDI, 1.8 TSI, 1.9 TDI, 2.0 FSI, 2.0 TDI, 2.0 TDI 16V, 2.0 TFSI** 09/09 - 63 -195 kW	**35-113768**	**24-178006**	outside diameter strut 50 mm VA: Øa: 50 mm
B8	**1.2 TSI, 1.4 16V, 1.4 TSI, 1.6, 1.6 LPG, 1.6 TDI, 1.8 TSI, 1.9 TDI, 2.0 FSI, 2.0 TDI, 2.0 TDI 16V, 2.0 TFSI** 09/09 - 63 -195 kW	**35-108191**	**24-178006**	outside diameter strut 55 mm VA: Øa: 55 mm
B12 PK	**1.2 TSI, 1.4 16V, 1.4 TSI, 1.6, 2.0 FSI** 07/05 - 63 -110 kW	**46-000217**		outside diameter strut 50 mm; Conditions see certificates VA: lowering (expertise): 30 mm; axle load to: 1022 kg HA: lowering (expertise): 30 mm; axle load to: 965 kg
B12 PK	**1.4 16V, 1.4 TSI, 1.6, 2.0 FSI** 07/05 - 63 -110 kW	**46-182364**		outside diameter strut 55 mm; Conditions see certificates VA: lowering (expertise): 30 mm; axle load to: 1022 kg HA: lowering (expertise): 30 mm; axle load to: 965 kg
B12 PK	**2.0 FSI** 07/05 - 05/10 110 kW	**46-000200**		outside diameter strut 50 mm; Conditions see certificates; automatic transmission VA: lowering (expertise): 30 mm; axle load to: 1120 kg HA: lowering (expertise): 30 mm; axle load to: 965 kg
B12 PK	**2.0 FSI** 07/05 - 05/10 110 kW	**46-182371**		outside diameter strut 55 mm; Conditions see certificates; automatic transmission VA: lowering (expertise): 30 mm; axle load to: 1120 kg HA: lowering (expertise): 30 mm; axle load to: 965 kg
B12 PK	**1.6 TDI, 1.8 TSI, 1.9 TDI, 2.0 TDI, 2.0 TDI 16V, 2.0 TFSI** 09/09 - 66 -195 kW	**46-000200**		outside diameter strut 50 mm; Conditions see certificates VA: lowering (expertise): 30 mm; axle load to: 1120 kg HA: lowering (expertise): 30 mm; axle load to: 965 kg
B12 PK	**1.6 TDI, 1.8 TSI, 1.9 TDI, 2.0 TDI, 2.0 TDI 16V, 2.0 TFSI** 09/09 - 66 -195 kW	**46-182371**		outside diameter strut 55 mm; Conditions see certificates VA: lowering (expertise): 30 mm; axle load to: 1120 kg HA: lowering (expertise): 30 mm; axle load to: 965 kg
B12 SL	**1.2 TSI, 1.4 16V, 1.4 TSI, 1.6, 1.6 TDI, 1.8 TSI, 2.0 FSI** 07/05 - 63 -118 kW	**46-182340**		outside diameter strut 50 mm; Conditions see certificates VA: lowering (expertise): 45-50 mm; axle load to: 1040 kg HA: lowering (expertise): 35 mm; axle load to: 930 kg
B12 SL	**1.4 16V, 1.4 TSI, 1.6, 1.6 TDI, 1.8 TSI, 2.0 FSI** 07/05 - 63 -118 kW	**46-000224**		outside diameter strut 55 mm; Conditions see certificates VA: lowering (expertise): 45-50 mm; axle load to: 1040 kg HA: lowering (expertise): 35 mm; axle load to: 930 kg
B12 SL	**2.0 FSI** 07/05 - 05/10 110 kW	**46-182357**		outside diameter strut 50 mm; Conditions see certificates; automatic transmission VA: lowering (expertise): 45-50 mm; axle load to: 1130 kg HA: without ride height adjustment; lowering (expertise): 35 mm; axle load to: 930 kg

BILSTEIN®

SEAT

SEAT LEON (1P1)

B12 SL	**2.0 FSI** 07/05 - 05/10 110 kW	**46-000262**	outside diameter strut 55 mm; Conditions see certificates; automatic transmission VA: lowering (expertise): 45-50 mm; axle load to: 1130 kg HA: without ride height adjustment; lowering (expertise): 35 mm; axle load to: 930 kg
B12 SL	**1.6 TDI, 1.8 TSI, 1.9 TDI, 2.0 TDI, 2.0 TDI 16V, 2.0 TFSI** 09/09 - 66 -195 kW	**46-182357**	outside diameter strut 50 mm; Conditions see certificates VA: lowering (expertise): 45-50 mm; axle load to: 1130 kg HA: without ride height adjustment; lowering (expertise): 35 mm; axle load to: 930 kg
B12 SL	**1.6 TDI, 1.8 TSI, 1.9 TDI, 2.0 TDI, 2.0 TDI 16V, 2.0 TFSI** 09/09 - 66 -195 kW	**46-000262**	outside diameter strut 55 mm; Conditions see certificates VA: lowering (expertise): 45-50 mm; axle load to: 1130 kg HA: without ride height adjustment; lowering (expertise): 35 mm; axle load to: 930 kg
B14	**1.2 TSI, 1.4 16V, 1.4 TSI, 1.6, 1.6 LPG, 1.6 TDI, 1.8 TSI, 1.9 TDI, 2.0 FSI, 2.0 TDI, 2.0 TDI 16V, 2.0 TFSI** 09/09 - 63 -195 kW	**47-128347**	outside diameter strut 50 mm; Conditions see certificates VA: lowering (expertise): 20-30 mm; axle load to: 1210 kg HA: lowering (expertise): 10-30 mm; axle load to: 1095 kg
B14	**1.2 TSI, 1.4 16V, 1.4 TSI, 1.6, 1.6 LPG, 1.6 TDI, 1.8 TSI, 1.9 TDI, 2.0 FSI, 2.0 TDI, 2.0 TDI 16V, 2.0 TFSI** 09/09 - 63 -195 kW	**47-127708**	outside diameter strut 55 mm; Conditions see certificates VA: lowering (expertise): 20-30 mm; axle load to: 1210 kg HA: lowering (expertise): 10-30 mm; axle load to: 1095 kg
B16 PSS10	**1.2 TSI, 1.4 16V, 1.4 TSI, 1.6, 1.6 LPG, 1.6 TDI, 1.8 TSI, 1.9 TDI, 2.0 FSI, 2.0 TDI, 2.0 TDI 16V, 2.0 TFSI** 09/09 - 63 -195 kW	**48-135238**	outside diameter strut 50 mm; Conditions see certificates VA: lowering (expertise): 20-30 mm; axle load to: 1210 kg HA: lowering (expertise): 10-30 mm; axle load to: 1095 kg
B16 PSS10	**1.2 TSI, 1.4 16V, 1.4 TSI, 1.6, 1.6 LPG, 1.6 TDI, 1.8 TSI, 1.9 TDI, 2.0 FSI, 2.0 TDI, 2.0 TDI 16V, 2.0 TFSI** 09/09 - 63 -195 kW	**48-135245**	outside diameter strut 55 mm; Conditions see certificates VA: lowering (expertise): 20-30 mm; axle load to: 1210 kg HA: lowering (expertise): 10-30 mm; axle load to: 1095 kg
B16 RC	**1.2 TSI, 1.4 16V, 1.4 TSI, 1.6, 1.6 LPG, 1.6 TDI, 1.8 TSI, 1.9 TDI, 2.0 FSI, 2.0 TDI, 2.0 TDI 16V, 2.0 TFSI** 09/09 - 63 -195 kW	**49-196849**	Øa: 55 mm; disconect DCC; without electronic suspension control; mark: G07, G08, G09, G11; Conditions see certificates VA: lowering (expertise): 20-30 mm; axle load to: 1140 kg HA: lowering (expertise): 10-30 mm; axle load to: 1040 kg
B16 BCS	**2.0 TDI, 2.0 TFSI** 05/05 - 125 -195 kW	**48-215909**	outside diameter strut 55 mm; Conditions see certificates VA: lowering (expertise): 10-20 mm; axle load to: 1210 kg HA: lowering (expertise): 10-30 mm; axle load to: 1095 kg

SEAT MALAGA (023A)

B4	**1.2, 1.5, 1.7 D** 11/84 - 07/86 40 -63 kW	*22-040923*	*22-040763*	
B4	**1.2, 1.5, 1.7 D** 08/86 - 08/89 40 -63 kW	**11-101307** SP	*22-040763*	
B4	**1.2, 1.5, 1.5 i, 1.5 i CAT, 1.7 D** 09/89 - 12/93 40 -74 kW	**22-041180** **11-101291** SP	*22-040763*	
B4	**1.2 i, 1.7 D** 12/89 - 12/93 42 -52 kW	**22-041180** **11-101291** SP	*22-040763*	
B4	**1.5 i, 1.5 i CAT** 10/86 - 08/89 66 -74 kW	**11-101307** SP	*22-040763*	

SEAT MARBELLA (28)

B3	**0.8, 0.9, 0.9 CAT** 08/86 - 10/98 25 -32 kW	**36-154692**		with standard chassis
B4	**0.8, 0.9** 08/86 - 03/89 25 -29 kW	**22-040879** **11-101321** SP	*19-019390* OIO	
B4	**0.8, 0.9** 04/89 - 12/93 25 -29 kW	*22-041210* **11-101321** SP	*19-019390* OIO	
B4	**0.9, 0.9 CAT** 11/96 - 10/98 29 -32 kW	*22-041210* **11-101321** SP	*19-019390* OIO	

S

SEAT

SEAT MARBELLA (28)

SEAT MARBELLA Box (028A)

B3	**0.8, 0.9, 0.9 CAT** 01/87 - 12/93 25 -29 kW	**36-154692**		with standard chassis

SEAT PANDA (141A)

B3	**0.9** 10/80 - 12/86 31 kW	**36-154692**		with standard chassis
B4	**0.9** 10/80 - 12/86 31 kW	**22-040879**	*19-019390*	

SEAT RONDA (022A)

B4	**1.2, 1.5, 1.6** 08/83 - 12/86 44 -68 kW	*22-040923*	*22-040763*	
B4	**1.4, 1.7 Diesel** 06/82 - 09/82 40 -54 kW	*22-040756*	*22-040763*	
B4	**1.4, 1.7 Diesel** 09/82 - 11/88 40 -54 kW	*22-040923*	*22-040763*	

SEAT TERRA (24)

B3	**0.9, 0.9 CAT** 02/87 - 12/96 29 kW	**36-154692**		with standard chassis
B4	**0.9** 02/87 - 03/89 29 kW	**22-040879** **11-101321** SP	*19-019390*	
B4	**0.9** 04/89 - 12/96 29 kW	*22-041210* **11-101321** SP	*19-019390*	
B4	**0.9 CAT, 1.3 D, 1.4 D** 10/90 - 12/95 29 -35 kW	*22-041210* **11-101321** SP	*19-019390*	

SEAT TERRA Box (024A)

B4	**0.9** 01/87 - 03/89 29 kW	**22-040879** **11-101321** SP	*19-019390*	
B4	**0.9** 04/89 - 12/95 29 kW	*22-041210* **11-101321** SP	*19-019390*	
B4	**0.9 CAT, 1.3 D, 1.4 D** 01/90 - 12/95 29 -35 kW	*22-041210* **11-101321** SP	*19-019390*	

SEAT TOLEDO I (1L)

B1	**1.6 i, 1.8 16V, 1.9 D, 1.9 TD, 1.9 TDI, 2.0 i, 2.0 i 16V** 01/97 - 03/99 47 -110 kW	**12-117659**		VA: with ball bearing
B2	**1.6 i** 05/91 - 12/93 52 kW	**17-047142** **11-101291** SP	**15-062192** **11-101352** SP	
B2	**1.6 i, 1.8 i** 05/91 - 08/95 54 -66 kW	**17-047142** **11-101291** SP	**15-062192** **11-101352** SP	-> CH.Nr.: ZR054453
B2	**1.6 i, 1.8 i** 05/95 - 03/99 54 -66 kW	**17-104029** **11-101291** SP	**15-062192** **11-101352** SP	CH.Nr.: TR00001 ->
B2	**1.6 i** 11/96 - 03/99 74 kW	**17-104029** **11-101291** SP	**15-062192** **11-101352** SP	

S

SEAT				
SEAT TOLEDO I (1L)				
B2	**1.9 D** 12/95 - 03/99 47 kW	**17-104029** **11-101291** SP	**15-062192** **11-101352** SP	
B2	**1.9 D, 1.9 TD** 05/91 - 08/95 50 -55 kW	**17-047142** **11-101291** SP	**15-062192** **11-101352** SP	-> CH.Nr.: 1L-ZR 054 453
B2	**1.9 D, 1.9 TD** 05/95 - 03/99 50 -55 kW	**17-104029** **11-101291** SP	**15-062192** **11-101352** SP	CH.Nr.: 1L-TR 000 001 ->
B3	**1.6 i** 05/91 - 03/99 52 -74 kW	**36-131112**	**36-131136**	with standard chassis
B3	**2.0 i, 2.0 i 16V** 05/91 - 03/99 85 -110 kW	**36-130825**	**36-131136**	with standard chassis
B3	**1.9 TD, 1.9 TDI** 05/91 - 03/99 55 -81 kW	**36-130818**	**36-131136**	with standard chassis
B4	**1.6 i** 05/91 - 12/93 52 kW	**22-041142** **11-101291** SP	**19-019741** **11-101352** SP	
B4	**1.6 i, 1.8 i** 05/91 - 08/95 54 -66 kW	**22-041142** **11-101291** SP	**19-019741** **11-101352** SP	-> CH.Nr.: ZR054453
B4	**1.6 i, 1.8 i** 05/95 - 03/99 54 -66 kW	**22-045010** **11-101291** SP	**19-019741** **11-101352** SP	CH.Nr.: TR00001 ->
B4	**1.6 i** 11/96 - 03/99 74 kW	**22-045010** **11-101291** SP	**19-019741** **11-101352** SP	
B4	**1.8 16V, 2.0 i** 05/91 - 08/95 85 -98 kW	**22-041142** **11-101291** SP	**19-019741** **11-101352** SP	-> CH.Nr.: 1L-ZR 054 453
B4	**2.0 i** 09/95 - 03/99 85 kW	**22-044761** **11-101307** SP	**19-019741** **11-101352** SP	CH.Nr.: 1L-TR 000 001 ->
B4	**2.0 i 16V** 11/93 - 03/99 110 kW	**22-044761** **11-101307** SP	**19-019741** **11-101352** SP	
B4	**1.9 D** 12/95 - 03/99 47 kW	**22-045010** **11-101291** SP	**19-019741** **11-101352** SP	
B4	**1.9 D, 1.9 TD** 05/91 - 08/95 50 -55 kW	**22-041142** **11-101291** SP	**19-019741** **11-101352** SP	-> CH.Nr.: 1L-ZR 054 453
B4	**1.9 D, 1.9 TD** 09/95 - 03/99 50 -55 kW	**22-045010** **11-101291** SP	**19-019741** **11-101352** SP	CH.Nr.: 1L-TR 000 001 ->
B4	**1.9 TDI** 08/95 - 03/99 66 -81 kW	**22-045027** **11-101291** SP	**19-019741** **11-101352** SP	
B6 Sport	**1.6 i, 1.8 16V, 1.8 i, 1.9 D, 1.9 TD, 1.9 TDI, 2.0 i, 2.0 i 16V** 05/91 - 03/99 47 -110 kW	*22-181657* **11-101291** SP	**24-015240** **11-101352** SP	VA: twin-tube
B6 Sport	**1.6 i, 1.8 16V, 1.8 i, 1.9 D, 1.9 TD, 1.9 TDI, 2.0 i, 2.0 i 16V** 05/91 - 03/99 47 -110 kW	**35-043959**	**24-015240** **11-101352** SP	VA: mono-tube
B8	**1.6 i, 1.8 16V, 1.8 i, 1.9 D, 1.9 TD, 1.9 TDI, 2.0 i, 2.0 i 16V** 05/91 - 03/99 47 -110 kW	*22-003737* **11-101291** SP	**24-015295** **11-101352** SP	VA: twin-tube
B8	**1.6 i, 1.8 16V, 1.8 i, 1.9 D, 1.9 TD, 1.9 TDI, 2.0 i, 2.0 i 16V** 05/91 - 03/99 47 -110 kW	**35-043966**	**24-015295** **11-101352** SP	VA: mono-tube

S

SEAT				
SEAT TOLEDO II (1M2)				
B1	**1.8 All-wheel Drive, 2.8 4x4** 05/01 - 10/05 132 -165 kW	**12-116966**		VA: with ball bearing
B3	**1.4 16V, 1.6, 1.6 16V, 1.9 TDI** 04/99 - 05/06 55 -81 kW	**37-134129**	**36-131228**	with standard chassis
B3	**1.4 16V, 1.6, 1.6 16V, 1.8 20V, 1.8 20VT, 1.9 TDI, 2.3 V5, 2.3 V5 20V** 04/99 - 05/06 55 -132 kW		**36-131297**	with standard chassis; Heavy Duty Version .
B3	**1.4 16V, 1.6, 1.6 16V** 04/99 - 05/06 55 -77 kW	**37-155155**	**36-134113**	with sports suspension
B3	**1.8 20V, 1.8 20VT, 1.9 TDI, 2.3 V5, 2.3 V5 20V** 04/99 - 05/06 92 -132 kW	**37-131425**	**36-131228**	with standard chassis
B3	**1.8 20V, 1.8 20VT, 2.3 V5** 04/99 - 05/06 92 -132 kW	**37-134129**	**36-134113**	with sports suspension
B3	**2.3 V5 20V** 05/01 - 05/06 125 kW	**37-134211**	**36-134113**	with sports suspension
B3	**1.9 SDI, 1.9 TDi** 04/99 - 05/06 50 -110 kW	**37-155155**	**36-134113**	with sports suspension
B4	**1.4 16V, 1.6, 1.6 16V, 1.8 20V, 1.8 20VT, 1.9 SDI, 1.9 TDi, 2.3 V5, 2.3 V5 20V** 04/99 - 05/06 50 -132 kW	**22-045744** **11-103455** SP	**19-029429** **11-115755** SP	with standard chassis
B4	**1.4 16V, 1.6, 1.6 16V, 1.8 20V, 1.8 20VT, 1.9 SDI, 1.9 TDi, 2.3 V5, 2.3 V5 20V** 04/99 - 05/06 50 -132 kW	**22-045751** **11-103455** SP	**19-029177** **11-115755** SP	with sports suspension
B4	**1.4 16V, 1.6, 1.6 16V** 04/99 - 05/06 55 -77 kW	**22-045744** **11-103455** SP	**19-140032** **11-115755** SP	with off-road suspension
B4	**1.8 All-wheel Drive, 2.8 4x4** 05/01 - 10/05 132 -165 kW	**22-145550**	**19-145570**	with standard chassis
B6 Sport	**1.4 16V, 1.6, 1.6 16V, 1.8 20V, 1.8 20VT, 1.9 SDI, 1.9 TDi, 2.3 V5, 2.3 V5 20V** 04/99 - 05/06 50 -132 kW	**35-044079**	**24-026239** **11-115755** SP	VA: Mono Tube Upside Down
B6 Sport	**1.8 All-wheel Drive, 2.8 4x4** 05/01 - 10/05 132 -165 kW	**35-046370**	**24-060349**	
B8	**1.4 16V, 1.6, 1.6 16V, 1.8 20V, 1.8 20VT, 1.9 SDI, 1.9 TDi, 2.3 V5, 2.3 V5 20V** 04/99 - 05/06 50 -132 kW	**35-044086**	**24-026246** **11-115755** SP	VA: Mono Tube Upside Down
B8	**1.8 All-wheel Drive, 2.8 4x4** 05/01 - 10/05 132 -165 kW	**35-046387**	**24-060356**	
B10	**1.4 16V, 1.6, 1.6 16V, 1.8 20V, 1.8 20VT, 1.9 SDI, 1.9 TDi, 2.3 V5, 2.3 V5 20V** 04/99 - 05/06 50 -132 kW	**46-111890**		Conditions see certificates VA: lowering (expertise): 50 mm; axle load to: 980 kg HA: lowering (expertise): 40 mm
B10	**1.4 16V, 1.6, 1.6 16V, 1.8 20V, 1.8 20VT, 1.9 SDI, 1.9 TDi, 2.3 V5, 2.3 V5 20V** 04/99 - 05/06 50 -132 kW	**46-111906**		Conditions see certificates VA: lowering (expertise): 50 mm; axle load from: 981 kg HA: lowering (expertise): 40 mm
B12 PK	**1.4 16V, 1.6, 1.6 16V** 04/99 - 05/06 55 -77 kW	**46-188007**		Conditions see certificates VA: lowering (expertise): 30 mm; axle load to: 910 kg HA: without ride height adjustment; lowering (expertise): 20-25 mm; axle load to: 1000 kg
B12 PK	**1.8 20V, 1.8 20VT, 1.9 SDI, 1.9 TDi** 04/99 - 05/06 50 -132 kW	**46-188014**		Conditions see certificates VA: lowering (expertise): 30 mm; axle load to: 982 kg HA: without ride height adjustment; lowering (expertise): 20-25 mm; axle load to: 1000 kg

SEAT

SEAT TOLEDO II (1M2)

B12 PK	**1.9 TDi, 2.3 V5, 2.3 V5 20V** 05/01 - 05/06 66 -125 kW	**46-188021**		Conditions see certificates VA: lowering (expertise): 30 mm; axle load to: 1005 kg HA: without ride height adjustment; lowering (expertise): 20-25 mm; axle load to: 1000 kg
B12 SL	**1.4 16V, 1.6, 1.6 16V, 1.8 20V, 1.8 20VT, 1.9 SDI, 1.9 TDi** 04/99 - 05/06 50 -132 kW	**46-180285**		Conditions see certificates VA: lowering (expertise): 45-50 mm; axle load to: 950 kg HA: without ride height adjustment; lowering (expertise): 30 mm; axle load to: 1000 kg
B12 SL	**1.9 SDI, 1.9 TDi, 2.3 V5, 2.3 V5 20V** 04/99 - 05/06 50 -125 kW	**46-180292**		Conditions see certificates VA: lowering (expertise): 45-50 mm; axle load to: 1000 kg HA: without ride height adjustment; lowering (expertise): 30 mm; axle load to: 1000 kg
B14	**1.4 16V, 1.6, 1.6 16V, 1.8 20V, 1.8 20VT, 1.9 SDI, 1.9 TDi, 2.3 V5, 2.3 V5 20V** 04/99 - 05/06 50 -132 kW	**47-124851**		Spacers required for several wheel/tyre combinations; Conditions see certificates VA: lowering (expertise): 20-45 mm; axle load to: 1060 kg HA: lowering (expertise): 20-40 mm; axle load to: 1010 kg
B16 PSS9	**1.4 16V, 1.6, 1.6 16V, 1.8 20V, 1.8 20VT, 1.9 SDI, 1.9 TDi, 2.3 V5, 2.3 V5 20V** 04/99 - 05/06 50 -132 kW	**48-080651**		Spacers required for several wheel/tyre combinations; Conditions see certificates VA: lowering (expertise): 25-45 mm; axle load to: 1060 kg HA: lowering (expertise): 20-40 mm; axle load to: 1010 kg

SEAT TOLEDO III (5P2)

B1	**1.6, 1.8 TFSI, 1.9 TDI, 2.0 FSI, 2.0 TDI, 2.0 TFSI** 04/04 - 05/09 75 -147 kW	**12-224074**		VA: with ball bearing
B4	**1.6, 1.8 TFSI, 1.9 TDI, 2.0 FSI, 2.0 TDI, 2.0 TFSI** 04/04 - 05/09 75 -147 kW	**22-131607**	**19-127439**	with standard chassis VA: Øa: 50 mm
B4	**1.6, 1.8 TFSI, 1.9 TDI, 2.0 FSI, 2.0 TDI, 2.0 TFSI** 04/04 - 05/09 75 -147 kW	**22-131614**	**19-127439**	with standard chassis VA: Øa: 55 mm
B4	**1.6, 1.8 TFSI, 1.9 TDI, 2.0 FSI, 2.0 TDI, 2.0 TFSI** 04/04 - 05/09 75 -147 kW	**22-139184**	**19-127439**	with sports suspension VA: Øa: 50 mm
B4	**1.6, 1.8 TFSI, 1.9 TDI, 2.0 FSI, 2.0 TDI, 2.0 TFSI** 04/04 - 05/09 75 -147 kW	**22-139191**	**19-127439**	with sports suspension VA: Øa: 55 mm
B6 Sport	**1.6, 1.8 TFSI, 1.9 TDI, 2.0 FSI, 2.0 TDI, 2.0 TFSI** 04/04 - 05/09 75 -147 kW	**35-113751**	**24-172936**	VA: Øa: 50 mm
B6 Sport	**1.6, 1.8 TFSI, 1.9 TDI, 2.0 FSI, 2.0 TDI, 2.0 TFSI** 04/04 - 05/09 75 -147 kW	**35-108177**	**24-172936**	VA: Øa: 55 mm
B8	**1.6, 1.8 TFSI, 1.9 TDI, 2.0 FSI, 2.0 TDI, 2.0 TFSI** 04/04 - 05/09 75 -147 kW	**35-113768**	**24-178006**	VA: Øa: 50 mm
B8	**1.6, 1.8 TFSI, 1.9 TDI, 2.0 FSI, 2.0 TDI, 2.0 TFSI** 04/04 - 05/09 75 -147 kW	**35-108191**	**24-178006**	VA: Øa: 55 mm
B12 PK	**1.6, 2.0 FSI** 10/04 - 05/09 75 -110 kW	**46-194749**		outside diameter strut 50 mm; Conditions see certificates VA: lowering (expertise): 30 mm; axle load to: 1022 kg HA: lowering (expertise): 30 mm; axle load to: 1050 kg
B12 PK	**1.6, 2.0 FSI** 10/04 - 05/09 75 -110 kW	**46-194756**		outside diameter strut 55 mm; Conditions see certificates VA: lowering (expertise): 30 mm; axle load to: 1022 kg HA: lowering (expertise): 30 mm; axle load to: 1050 kg
B12 PK	**1.8 TFSI, 1.9 TDI, 2.0 TDI, 2.0 TFSI** 11/05 - 05/09 77 -147 kW	**46-194763**		outside diameter strut 50 mm; Conditions see certificates VA: lowering (expertise): 30 mm; axle load to: 1120 kg HA: lowering (expertise): 30 mm; axle load to: 1050 kg
B12 PK	**1.8 TFSI, 1.9 TDI, 2.0 TDI, 2.0 TFSI** 11/05 - 05/09 77 -147 kW	**46-194770**		outside diameter strut 55 mm; Conditions see certificates VA: lowering (expertise): 30 mm; axle load to: 1120 kg HA: lowering (expertise): 30 mm; axle load to: 1050 kg

S

SEAT

SEAT TOLEDO III (5P2)

B12 PK	**2.0 FSI** 10/04 - 05/09 110 kW		**46-194763**	outside diameter strut 50 mm; Conditions see certificates; automatic transmission VA: lowering (expertise): 30 mm; axle load to: 1120 kg HA: lowering (expertise): 30 mm; axle load to: 1050 kg
B12 PK	**2.0 FSI** 10/04 - 05/09 110 kW		**46-194770**	outside diameter strut 55 mm; Conditions see certificates; automatic transmission VA: lowering (expertise): 30 mm; axle load to: 1120 kg HA: lowering (expertise): 30 mm; axle load to: 1050 kg
B14	**1.6, 1.8 TFSI, 1.9 TDI, 2.0 FSI, 2.0 TDI, 2.0 TFSI** 04/04 - 05/09 75 -147 kW		**47-128347**	outside diameter strut 50 mm; Conditions see certificates VA: lowering (expertise): 30-50 mm; axle load to: 1210 kg HA: lowering (expertise): 30-50 mm; axle load to: 1095 kg
B14	**1.6, 1.8 TFSI, 1.9 TDI, 2.0 FSI, 2.0 TDI, 2.0 TFSI** 04/04 - 05/09 75 -147 kW		**47-127708**	outside diameter strut 55 mm; Conditions see certificates VA: lowering (expertise): 30-50 mm; axle load to: 1210 kg HA: lowering (expertise): 30-50 mm; axle load to: 1095 kg
B16 PSS10	**1.6, 1.8 TFSI, 1.9 TDI, 2.0 FSI, 2.0 TDI, 2.0 TFSI** 04/04 - 05/09 75 -147 kW		**48-135238**	outside diameter strut 50 mm; Conditions see certificates VA: lowering (expertise): 30-50 mm; axle load to: 1210 kg HA: lowering (expertise): 30-50 mm; axle load to: 1095 kg
B16 PSS10	**1.6, 1.8 TFSI, 1.9 TDI, 2.0 FSI, 2.0 TDI, 2.0 TFSI** 04/04 - 05/09 75 -147 kW		**48-135245**	outside diameter strut 55 mm; Conditions see certificates VA: lowering (expertise): 30-50 mm; axle load to: 1210 kg HA: lowering (expertise): 30-50 mm; axle load to: 1095 kg
B16 RC	**1.6, 1.8 TFSI, 1.9 TDI, 2.0 FSI, 2.0 TDI, 2.0 TFSI** 04/04 - 05/09 75 -147 kW		**49-196849**	Øa: 55 mm; mark: G07, G08, G09, G11; Conditions see certificates VA: lowering (expertise): 30-50 mm; axle load to: 1140 kg HA: lowering (expertise): 30-50 mm; axle load to: 1040 kg

SEAT 600 D

B6 Sport	**0.8** 09/63 - 04/70 17 kW	*24-007405*	*24-007504*	

SEAT 132

B4	**1.6, 1.8, 1.9, 2.0 D, 2.2 D** 05/73 - 12/82 40 -80 kW		*19-019291*	

SEAT 133

B6 Sport	**0.8** 05/74 - 11/79 25 kW	*24-007405*	*24-007504*	

SKODA

SKODA FABIA (6Y2)

B1	**1.0, 1.2, 1.4, 1.4 16V, 1.4 TDI, 1.9 SDI, 1.9 TDI, 2.0** 08/99 - 03/08 37 -85 kW		**12-117079**	HA: without ball bearing; Material: Rubber/Metal; Material: Aluminium
B3	**1.4 16V** 12/99 - 03/08 55 kW	**37-160678**		with standard chassis; with AC; manual transmission
B3	**1.4 TDI** 04/03 - 03/08 51 -59 kW	**37-160654**		with standard chassis; with AC
B3	**1.9 SDI** 12/99 - 03/08 47 kW	**37-160654**		with AC
B3	**1.9 TDI** 01/00 - 03/08 74 kW	*36-199587*		with AC
B4	**1.0, 1.2, 1.4, 1.4 16V, 1.4 TDI, 1.9 SDI, 1.9 TDI, 2.0** 08/99 - 03/08 37 -85 kW	**22-105813** **11-101321** SP	**19-109572** **11-106470** SP	with standard chassis

S

SKODA

SKODA FABIA (6Y2)

B4	**1.0, 1.2, 1.4, 1.4 16V, 1.4 TDI, 1.9 SDI, 1.9 TDI, 2.0** 08/99 - 03/08 37 -85 kW	**22-196309** **11-101321** SP	**19-196312** **11-106470** SP	with sports suspension
B6 Sport	**1.0, 1.2, 1.4, 1.4 16V, 1.4 TDI, 1.9 SDI, 1.9 TDI, 2.0** 08/99 - 03/08 37 -85 kW	**35-052173**	**24-067898** **11-106470** SP	
B8	**1.0, 1.2, 1.4, 1.4 16V, 1.4 TDI, 1.9 SDI, 1.9 TDI, 1.9 TDI RS, 2.0** 08/99 - 03/08 37 -96 kW	**35-052180**	**24-067904** **11-106470** SP	
B12 PK	**1.0, 1.2, 1.4, 1.4 16V** 08/99 - 03/08 37 -74 kW	**46-182623**		Conditions see certificates VA: lowering (expertise): 30 mm; axle load to: 920 kg HA: without ride height adjustment; lowering (expertise): 30 mm; axle load to: 840 kg
B12 PK	**1.4 TDI, 1.9 SDI, 1.9 TDI, 2.0** 12/99 - 03/08 47 -85 kW	**46-182630**		Conditions see certificates VA: lowering (expertise): 30 mm; axle load to: 960 kg HA: without ride height adjustment; lowering (expertise): 30 mm; axle load to: 840 kg
B12 PK	**1.9 TDI RS** 06/03 - 03/08 96 kW	**46-182647**		Conditions see certificates VA: lowering (expertise): 25 mm; axle load to: 960 kg HA: without ride height adjustment; lowering (expertise): 25 mm; axle load to: 840 kg
B14	**1.0, 1.2, 1.4, 1.4 16V, 1.4 TDI, 1.9 SDI, 1.9 TDI, 1.9 TDI RS, 2.0** 08/99 - 03/08 37 -96 kW	**47-146914**		Conditions see certificates VA: lowering (expertise): 30-50 mm; axle load to: 960 kg HA: lowering (expertise): 30-45 mm; axle load to: 835 kg
B16 PSS9	**1.0, 1.2, 1.4, 1.4 16V, 1.4 TDI, 1.9 SDI, 1.9 TDI, 1.9 TDI RS, 2.0** 08/99 - 03/08 37 -96 kW	**48-146852**		Conditions see certificates VA: lowering (expertise): 30-50 mm; axle load to: 960 kg HA: lowering (expertise): 30-45 mm; axle load to: 835 kg

SKODA FABIA Saloon (6Y3)

B1	**1.0, 1.2, 1.4, 1.4 16V, 1.4 TDI, 1.9 SDI, 1.9 TDI, 2.0** 12/99 - 12/07 37 -85 kW		**12-117079**	HA: without ball bearing; Material: Rubber/Metal; Material: Aluminium
B3	**1.4 16V** 10/99 - 12/07 55 kW	**37-160678**		with standard chassis; with AC; manual transmission
B3	**1.4 TDI** 04/03 - 12/07 51 -59 kW	**37-160654**		with standard chassis; with AC
B3	**1.9 SDI** 11/99 - 12/07 47 kW	**37-160654**		with AC
B3	**1.9 TDI** 01/00 - 12/07 74 kW	*36-199587*		with AC
B4	**1.0, 1.2, 1.4, 1.4 16V, 1.4 TDI, 1.9 SDI, 1.9 TDI, 2.0** 12/99 - 12/07 37 -85 kW	**22-105813** **11-101321** SP	**19-109589** **11-106470** SP	with standard chassis
B6 Sport	**1.0, 1.2, 1.4, 1.4 16V, 1.4 TDI, 1.9 SDI, 1.9 TDI, 2.0** 12/99 - 12/07 37 -85 kW	**35-052173**	**24-067898** **11-106470** SP	
B8	**1.0, 1.2, 1.4, 1.4 16V, 1.4 TDI, 1.9 SDI, 1.9 TDI, 2.0** 12/99 - 12/07 37 -85 kW	**35-052180**	**24-067904** **11-106470** SP	
B12 PK	**1.2, 1.4, 1.4 16V** 12/99 - 12/07 40 -74 kW	**46-182609**		Conditions see certificates VA: lowering (expertise): 30 mm; axle load to: 900 kg HA: without ride height adjustment; lowering (expertise): 30 mm; axle load to: 875 kg
B12 PK	**1.4 TDI, 1.9 SDI, 1.9 TDI, 2.0** 12/99 - 12/07 47 -85 kW	**46-182616**		Conditions see certificates VA: lowering (expertise): 30 mm; axle load to: 900 kg HA: without ride height adjustment; lowering (expertise): 30 mm; axle load to: 875 kg

S

SKODA

SKODA FABIA Saloon (6Y3)

B14	**1.0, 1.2, 1.4, 1.4 16V, 1.4 TDI, 1.9 SDI, 1.9 TDI, 2.0** 12/99 - 12/07 37 -85 kW		**47-146914**	Conditions see certificates VA: lowering (expertise): 30-50 mm; axle load to: 960 kg HA: lowering (expertise): 30-45 mm; axle load to: 835 kg
B16 PSS9	**1.0, 1.2, 1.4, 1.4 16V, 1.4 TDI, 1.9 SDI, 1.9 TDI, 2.0** 12/99 - 12/07 37 -85 kW		**48-146852**	Conditions see certificates VA: lowering (expertise): 30-50 mm; axle load to: 960 kg HA: lowering (expertise): 30-45 mm; axle load to: 835 kg

SKODA FABIA Combi (6Y5)

B1	**1.0, 1.2, 1.4, 1.4 16V, 1.4 TDI, 1.9 SDI, 1.9 TDI, 2.0** 04/00 - 12/07 37 -85 kW		**12-117079**	HA: without ball bearing; Material: Rubber/Metal; Material: Aluminium
B3	**1.0, 1.2, 1.4, 1.4 16V** 04/00 - 12/07 37 -74 kW	**37-160692**	**36-200108**	with standard chassis
B3	**1.4 TDI, 1.9 SDI, 1.9 TDI, 2.0** 04/00 - 12/07 47 -85 kW	*36-199587*	**36-200108**	with standard chassis
B4	**1.0, 1.2, 1.4, 1.4 16V, 1.4 TDI, 1.9 SDI, 1.9 TDI, 2.0** 04/00 - 12/07 37 -85 kW	**22-105813** **11-101321** SP	**19-109589** **11-106470** SP	with standard chassis
B6 Sport	**1.0, 1.2, 1.4, 1.4 16V, 1.4 TDI, 1.9 SDI, 1.9 TDI, 2.0** 04/00 - 12/07 37 -85 kW	**35-052173**	**24-067898** **11-106470** SP	
B8	**1.0, 1.2, 1.4, 1.4 16V, 1.4 TDI, 1.9 SDI, 1.9 TDI, 2.0** 04/00 - 12/07 37 -85 kW	**35-052180**	**24-067904** **11-106470** SP	
B12 PK	**1.2, 1.4, 1.4 16V** 04/00 - 12/07 40 -74 kW		**46-182609**	Conditions see certificates VA: lowering (expertise): 30 mm; axle load to: 900 kg HA: without ride height adjustment; lowering (expertise): 30 mm; axle load to: 875 kg
B12 PK	**1.4 TDI, 1.9 SDI, 1.9 TDI, 2.0** 04/00 - 12/07 47 -85 kW		**46-182616**	Conditions see certificates VA: lowering (expertise): 30 mm; axle load to: 900 kg HA: without ride height adjustment; lowering (expertise): 30 mm; axle load to: 875 kg
B14	**1.0, 1.2, 1.4, 1.4 16V, 1.4 TDI, 1.9 SDI, 1.9 TDI, 2.0** 04/00 - 12/07 37 -85 kW		**47-146914**	Conditions see certificates VA: lowering (expertise): 30-50 mm; axle load to: 960 kg HA: lowering (expertise): 30-45 mm; axle load to: 835 kg
B16 PSS9	**1.0, 1.2, 1.4, 1.4 16V, 1.4 TDI, 1.9 SDI, 1.9 TDI, 2.0** 04/00 - 12/07 37 -85 kW		**48-146852**	Conditions see certificates VA: lowering (expertise): 30-50 mm; axle load to: 960 kg HA: lowering (expertise): 30-45 mm; axle load to: 835 kg

SKODA FABIA Praktik

B4	**1.2, 1.4, 1.4 TDI, 1.9 SDI** 07/01 - 12/07 40 -51 kW	**22-105813** **11-101321** SP	**19-109572** **11-106470** SP	
B6 Sport	**1.2, 1.4, 1.4 TDI, 1.9 SDI** 07/01 - 12/07 40 -51 kW	**35-052173**	**24-067898** **11-106470** SP	
B8	**1.2, 1.4, 1.4 TDI, 1.9 SDI** 07/01 - 12/07 40 -51 kW	**35-052180**	**24-067904** **11-106470** SP	

SKODA FABIA

B1	**1.2, 1.2 16V, 1.2 TDI, 1.2 TSI, 1.4, 1.4 TDI, 1.4 TSI, 1.6, 1.6 TDI, 1.9 TDI** 12/06 - 44 -132 kW		**12-117079**	HA: without ball bearing; Material: Rubber/Metal; Material: Aluminium
B3	**1.2, 1.2 16V** 12/06 - 44 -51 kW	**37-160692**	**36-300075**	with standard chassis

S

SKODA

SKODA FABIA

B3	**1.2 TSI, 1.4, 1.4 TSI, 1.6** 04/07 - 63 -132 kW	**37-160678**	**36-300075**	with standard chassis
B3	**1.2 TDI, 1.4 TDI, 1.6 TDI, 1.9 TDI** 04/07 - 51 -77 kW	*36-199587*	**36-300075**	with standard chassis
B4	**1.2, 1.2 16V, 1.2 TDI, 1.2 TSI, 1.4, 1.4 TDI, 1.6, 1.6 TDI, 1.9 TDI** 12/06 - 44 -77 kW	**22-105813** **11-101321** SP	**19-109572** **11-106470** SP	with standard chassis
B6 Sport	**1.2, 1.2 16V, 1.2 TDI, 1.2 TSI, 1.4, 1.4 TDI, 1.6, 1.6 TDI, 1.9 TDI** 12/06 - 44 -77 kW	**35-052173**	**24-067898** **11-106470** SP	
B8	**1.2, 1.2 16V, 1.2 TDI, 1.2 TSI, 1.4, 1.4 TDI, 1.4 TSI, 1.6, 1.6 TDI, 1.9 TDI** 12/06 - 44 -132 kW	**35-052180**	**24-067904** **11-106470** SP	
B12 PK	**1.2, 1.2 16V, 1.2 TSI, 1.4, 1.4 TDI, 1.6, 1.6 TDI** 12/06 - 44 -77 kW	**46-182678**		Conditions see certificates VA: lowering (expertise): 30 mm; axle load to: 920 kg HA: lowering (expertise): 30 mm; axle load to: 840 kg
B12 PK	**1.4 TDI, 1.6 TDI, 1.9 TDI** 01/07 - 51 -77 kW	**46-182692**		Conditions see certificates VA: lowering (expertise): 30 mm; axle load to: 960 kg HA: lowering (expertise): 30 mm; axle load to: 840 kg

SKODA FABIA Combi

B1	**1.2, 1.2 16V, 1.2 TDI, 1.2 TSI, 1.4, 1.4 TDI, 1.4 TSI, 1.6, 1.6 TDI, 1.9 TDI** 10/07 - 44 -132 kW		**12-117079**	HA: without ball bearing; Material: Rubber/Metal; Material: Aluminium
B3	**1.2, 1.2 16V** 10/07 - 44 -51 kW	**37-160692**	**36-200108**	with standard chassis
B3	**1.2 TSI, 1.4, 1.4 TSI, 1.6** 10/07 - 63 -132 kW	**37-160678**	**36-200108**	with standard chassis
B3	**1.2 TDI, 1.4 TDI, 1.6 TDI, 1.9 TDI** 10/07 - 51 -77 kW	*36-199587*	**36-200108**	with standard chassis
B4	**1.2, 1.2 16V, 1.2 TDI, 1.2 TSI, 1.4, 1.4 TDI, 1.4 TSI, 1.6, 1.6 TDI, 1.9 TDI** 10/07 - 44 -132 kW	**22-105813** **11-101321** SP	**19-109589** **11-106470** SP	with standard chassis
B6 Sport	**1.2, 1.2 16V, 1.2 TDI, 1.2 TSI, 1.4, 1.4 TDI, 1.4 TSI, 1.6, 1.6 TDI, 1.9 TDI** 10/07 - 44 -132 kW	**35-052173**	**24-067898** **11-106470** SP	
B8	**1.2, 1.2 16V, 1.2 TDI, 1.2 TSI, 1.4, 1.4 TDI, 1.4 TSI, 1.6, 1.6 TDI, 1.9 TDI** 10/07 - 44 -132 kW	**35-052180**	**24-067904** **11-106470** SP	
B12 PK	**1.2, 1.2 16V, 1.2 TSI, 1.4, 1.6** 10/07 - 44 -77 kW	**46-182708**		Conditions see certificates VA: lowering (expertise): 30 mm; axle load to: 920 kg HA: lowering (expertise): 20 mm; axle load to: 840 kg
B12 PK	**1.2 TDI, 1.4 TDI, 1.6, 1.6 TDI, 1.9 TDI** 10/07 - 51 -77 kW	**46-182715**		Conditions see certificates VA: lowering (expertise): 30 mm; axle load to: 960 kg HA: lowering (expertise): 20 mm; axle load to: 840 kg

SKODA FAVORIT (781)

B3	**1.3, 1.3 135, 1.3 135 X,LX,GLX, 1.3 135L, 1.3 136** 10/90 - 09/94 40 -50 kW	**36-201860**	**36-201914**	with standard chassis
B4	**1.3, 1.3 135, 1.3 135 X,LX,GLX, 1.3 135L, 1.3 136** 10/90 - 09/94 40 -50 kW	**22-045720**	**19-029405** **11-101352** SP	

S

SKODA				
SKODA FAVORIT Forman (785)				
B3	**1.3** 08/91 - 06/95 40 -50 kW	**36-201860**	**36-201938**	with standard chassis
B4	**1.3** 08/91 - 06/95 40 -50 kW	**22-045720**	**19-029405** **11-101352** SP	
SKODA FAVORIT Pickup (787)				
B3	**1.3** 06/92 - 06/97 40 -50 kW	**36-201860**	i.V.	with standard chassis
B4	**1.3** 12/92 - 06/97 40 -50 kW	**22-045720**	**11-101352** SP	
SKODA FELICIA I (6U1)				
B3	**1.3** 10/94 - 03/98 40 -50 kW	36-213962		with off-road suspension
B4	**1.3, 1.6 LX, 1.9 D** 10/94 - 03/98 40 -55 kW	**22-045737** **11-116141** SP	**19-029412** **11-101352** SP	
SKODA FELICIA I Estate (6U5)				
B4	**1.3, 1.3 LX, 1.3 LXI, 1.6 GLX, 1.9 D** 08/95 - 03/98 40 -55 kW	**22-045737** **11-116141** SP	**19-029412** **11-101352** SP	
SKODA FELICIA II (6U1)				
B3	**1.3, 1.6** 01/98 - 06/01 40 -55 kW	**36-163304**	**36-163281**	with standard chassis
B3	**1.3, 1.6** 01/98 - 06/01 40 -55 kW	**36-163298**		with standard chassis; Heavy Duty Version .
B3	**1.9 D** 01/98 - 06/01 47 kW	**36-163298**	**36-163281**	with standard chassis
B4	**1.3, 1.6, 1.9 D** 01/98 - 06/01 40 -55 kW	**22-045737** **11-116141** SP	**19-029412** **11-101352** SP	with standard chassis
SKODA FELICIA II Estate (6U5)				
B3	**1.3, 1.6** 01/98 - 06/01 50 -55 kW	**36-163304**	**36-163274**	with standard chassis
B3	**1.3, 1.6** 01/98 - 06/01 50 -55 kW	**36-163298**		with standard chassis; Heavy Duty Version .
B3	**1.9 D** 01/98 - 06/01 47 kW	**36-163298**	**36-163274**	with standard chassis
B4	**1.3, 1.6, 1.9 D** 01/98 - 06/01 47 -55 kW	**22-045737** **11-116141** SP	**19-029412** **11-101352** SP	with standard chassis
SKODA OCTAVIA (1U2)				
B1	**1.4, 1.4 16V, 1.6, 1.8, 1.8 T, 1.9 SDI, 1.9 TDI, 2.0** 08/97 - 44 -110 kW	**12-116966**	**12-117079**	VA: with ball bearing HA: without ball bearing; Material: Rubber/Metal; Material: Aluminium
B3	**1.4, 1.4 16V, 1.6, 1.8, 1.9 SDI** 06/97 - 44 -92 kW	**37-134129**	**36-200801**	with standard chassis
B3	**1.4, 1.4 16V, 1.6, 1.8, 1.9 SDI** 06/97 - 44 -92 kW	**37-131425**	**36-200849**	with standard chassis; Heavy Duty Version .

S

SKODA				
SKODA OCTAVIA (1U2)				
B3	**1.8 T, 1.9 TDI** 09/96 - 66 -110 kW	*36-201891*	**36-200849**	with standard chassis
B3	**1.8 T, 1.9 TDI, 2.0** 09/96 - 66 -110 kW	**37-131425**	*36-199525*	with standard chassis; Heavy Duty Version .
B3	**1.8 T 4x4** 05/01 - 110 kW	**37-131425**		with standard chassis
B3	**2.0** 04/99 - 85 kW	**37-134129**	**36-200849**	with standard chassis
B4	**1.4, 1.4 16V, 1.6, 1.8, 1.8 T, 1.9 SDI, 1.9 TDI, 2.0** 08/97 - 44 -110 kW	**22-045744** **11-103455** SP	**19-029429** **11-115755** SP	with standard chassis
B4	**1.4, 1.4 16V, 1.6, 1.8, 1.8 T, 1.9 SDI, 1.9 TDI, 2.0** 08/97 - 44 -110 kW	**22-045751** **11-103455** SP	**19-029177** **11-115755** SP	with sports suspension
B4	**1.4, 1.4 16V, 1.6, 1.8, 1.8 T, 1.9 SDI, 1.9 TDI, 2.0** 08/97 - 44 -110 kW	**22-045744** **11-103455** SP	**19-140032** **11-115755** SP	with off-road suspension
B6 Sport	**1.4, 1.4 16V, 1.6, 1.8, 1.8 T, 1.9 SDI, 1.9 TDI, 2.0** 08/97 - 44 -110 kW	**35-044079**	**24-025430** **11-115755** SP	mono-tube VA: Mono Tube Upside Down
B6 Sport	**1.8 T 4x4** 05/01 - 110 kW	**35-046370**	**24-060349**	
B6 Sport	**RS 1.8 T** 05/01 - 132 kW	**35-046370**	**24-025430** **11-115755** SP	mono-tube
B8	**1.4, 1.4 16V, 1.6, 1.8, 1.8 T, 1.9 SDI, 1.9 TDI, 2.0** 08/97 - 44 -110 kW	**35-044086**	**24-025447** **11-115755** SP	mono-tube
B8	**1.8 T 4x4** 05/01 - 110 kW	**35-046387**	**24-060356**	VA: Mono Tube Upside Down
B8	**RS 1.8 T** 05/01 - 132 kW	**35-046387**	**24-025447** **11-115755** SP	mono-tube
B10	**1.4, 1.4 16V, 1.6, 1.8, 1.8 T, 1.9 SDI, 1.9 TDI, 2.0** 08/97 - 44 -110 kW	**46-111890**		Conditions see certificates VA: lowering (expertise): 50 mm; axle load to: 980 kg HA: lowering (expertise): 40 mm
B10	**1.4, 1.4 16V, 1.6, 1.8, 1.8 T, 1.9 SDI, 1.9 TDI, 2.0** 08/97 - 44 -110 kW	**46-111906**		Conditions see certificates VA: lowering (expertise): 50 mm; axle load from: 981 kg HA: lowering (expertise): 40 mm
B12 PK	**1.4, 1.4 16V, 1.6, 1.9 SDI** 06/97 - 44 -75 kW	**46-182524**		Conditions see certificates VA: lowering (expertise): 30 mm; axle load to: 1000 kg HA: without ride height adjustment; lowering (expertise): 30 mm; axle load to: 1000 kg
B12 PK	**1.8, 1.8 T, 1.9 TDI** 09/96 - 66 -110 kW	**46-182531**		Conditions see certificates VA: lowering (expertise): 30 mm; axle load to: 1000 kg HA: without ride height adjustment; lowering (expertise): 30 mm; axle load to: 1000 kg
B12 PK	**2.0** 04/99 - 85 kW	**46-182531**		Conditions see certificates; automatic transmission VA: lowering (expertise): 30 mm; axle load to: 1000 kg HA: without ride height adjustment; lowering (expertise): 30 mm; axle load to: 1000 kg
B12 PK	**2.0** 04/99 - 85 kW	**46-182524**		Conditions see certificates; manual transmission VA: lowering (expertise): 30 mm; axle load to: 1000 kg HA: without ride height adjustment; lowering (expertise): 30 mm; axle load to: 1000 kg
B12 SL	**1.4, 1.4 16V, 1.6, 1.8, 1.8 T, 1.9 SDI, 1.9 TDI, 2.0** 08/97 - 44 -110 kW	**46-180230**		Conditions see certificates VA: lowering (expertise): 45-50 mm; axle load to: 950 kg HA: lowering (expertise): 30 mm; axle load to: 1000 kg

S

SKODA

SKODA OCTAVIA (1U2)

B12 SL	**1.4, 1.4 16V, 1.6, 1.8, 1.8 T, 1.9 SDI, 1.9 TDI, 2.0** 08/97 - 44 -110 kW		**46-180247**	Conditions see certificates VA: lowering (expertise): 45-50 mm; axle load to: 1000 kg HA: lowering (expertise): 30 mm; axle load to: 1000 kg

SKODA OCTAVIA Combi (1U5)

B3	**1.4 16V, 1.6, 1.8 20V, 1.8 T, 1.9 SDI, 2.0** 04/99 - 50 -110 kW	*36-201730*	*36-199525*	with standard chassis
B3	**1.4 16V, 1.6, 1.8 20V, 1.8 T, 1.9 SDI, 1.9 TDI, 2.0** 04/99 - 50 -110 kW	**37-131425**	*36-201969*	with standard chassis; Heavy Duty Version .
B3	**1.8 T 4x4, 1.9 TDI 4x4, 2.0, 2.0 4x4** 01/00 - 66 -110 kW	**37-131425**		with standard chassis
B3	**1.9 TDI** 07/98 - 66 -96 kW	*36-201891*	*36-199525*	with standard chassis
B4	**1.4 16V, 1.6, 1.8 20V, 1.8 T, 1.9 SDI, 1.9 TDI, 2.0** 04/99 - 50 -110 kW	**22-045744** **11-103455** SP	**19-068633** **11-115755** SP	with standard chassis; with off-road suspension
B6 Sport	**1.4 16V, 1.6, 1.8 20V, 1.8 T, 1.9 SDI, 1.9 TDI, 2.0** 04/99 - 50 -110 kW	**35-044079**	**24-028004** **11-115755** SP	mono-tube VA: Mono Tube Upside Down
B6 Sport	**1.4 16V, 1.6, 1.8 20V, 1.8 T, 1.9 SDI, 1.9 TDI, 2.0** 04/99 - 50 -110 kW	**11-103455** SP	**24-028004** **11-115755** SP	twin-tube VA: twin-tube
B6 Sport	**1.8 T 4x4, 1.9 TDI 4x4, 2.0, 2.0 4x4** 01/00 - 66 -110 kW	**35-046370**	**24-060349**	
B6 Sport	**RS 1.8 T** 08/02 - 132 kW	**35-046370**	**24-028004** **11-115755** SP	
B8	**1.4 16V, 1.6, 1.8 20V, 1.8 T, 1.9 SDI, 1.9 TDI, 2.0** 04/99 - 50 -110 kW	**35-044086**	**24-028011** **11-115755** SP	mono-tube
B8	**1.8 T 4x4, 1.9 TDI 4x4, 2.0, 2.0 4x4** 01/00 - 66 -110 kW	**35-046387**	**24-060356**	VA: Mono Tube Upside Down
B8	**RS 1.8 T** 08/02 - 132 kW	**35-046387**	**24-028011** **11-115755** SP	
B10	**1.4 16V, 1.6, 1.8 20V, 1.8 T, 1.9 SDI, 1.9 TDI, 2.0** 04/99 - 50 -110 kW	**46-111944**		Conditions see certificates VA: lowering (expertise): 50 mm; axle load to: 980 kg HA: lowering (expertise): 40 mm; axle load to: 1020 kg
B10	**1.4 16V, 1.6, 1.8 20V, 1.8 T, 1.9 SDI, 1.9 TDI, 2.0** 04/99 - 50 -110 kW	**46-111937**		Conditions see certificates VA: lowering (expertise): 50 mm; axle load to: 1020 kg; axle load from: 981 kg HA: lowering (expertise): 40 mm
B12 PK	**1.4 16V, 1.6, 1.9 SDI** 07/98 - 50 -75 kW	**46-182548**		Conditions see certificates VA: lowering (expertise): 30 mm; axle load to: 1020 kg HA: without ride height adjustment; lowering (expertise): 30 mm; axle load to: 1020 kg
B12 PK	**1.8 20V, 1.8 T, 1.9 TDI** 07/98 - 66 -110 kW	**46-182555**		Conditions see certificates VA: lowering (expertise): 30 mm; axle load to: 1020 kg HA: without ride height adjustment; lowering (expertise): 30 mm; axle load to: 1020 kg
B12 PK	**2.0, 2.0 4x4** 04/99 - 85 -88 kW	**46-182548**		Conditions see certificates; manual transmission VA: lowering (expertise): 30 mm; axle load to: 1000 kg HA: without ride height adjustment; lowering (expertise): 30 mm; axle load to: 1020 kg
B12 PK	**2.0, 2.0 4x4** 04/99 - 85 -88 kW	**46-182555**		Conditions see certificates; automatic transmission VA: lowering (expertise): 30 mm; axle load to: 1000 kg HA: without ride height adjustment; lowering (expertise): 30 mm; axle load to: 1020 kg

S

SKODA

SKODA OCTAVIA (1Z3)

B1	**1.2 TSI, 1.4, 1.4 TSI, 1.6, 1.6 FSI, 1.6 GreenLine, 1.6 LPG, 1.6 TDI, 1.8 TSI, 1.9 TDI, 2.0 FSI, 2.0 RS, 2.0 TDI, 2.0 TDI 16V** 02/04 - 55 -147 kW	**12-224074**	**12-226535**	VA: with ball bearing
B3	**1.2 TSI** 02/10 - 77 kW	**37-133030**	**36-134076**	with standard chassis
B3	**1.4, 1.4 TSI, 1.6, 1.6 FSI, 1.6 GreenLine, 1.6 LPG** 02/04 - 55 -90 kW	**36-199594**	**36-134076**	with standard chassis
B3	**2.0 RS, 2.0 TDI** 10/05 - 125 -147 kW	**36-199600**	**36-199648**	with standard chassis
B3	**1.6 TDI, 1.8 TSI, 1.9 TDI, 2.0 FSI** 11/04 - 77 -118 kW	**37-133757**	**36-134076**	with standard chassis
B3	**2.0 TDI, 2.0 TDI 16V** 02/04 - 81 -103 kW	**37-147747**	**36-134076**	with standard chassis
B4	**1.2 TSI, 1.4, 1.4 TSI, 1.6, 1.6 FSI, 1.6 GreenLine, 1.6 LPG, 1.6 TDI, 1.8 TSI, 1.9 TDI, 2.0 FSI, 2.0 TDI, 2.0 TDI 16V** 02/04 - 55 -125 kW	**22-131607**	**19-127439**	with standard chassis VA: Øa: 50 mm
B4	**1.2 TSI, 1.4, 1.4 TSI, 1.6, 1.6 FSI, 1.6 GreenLine, 1.6 LPG, 1.6 TDI, 1.8 TSI, 1.9 TDI, 2.0 FSI, 2.0 TDI, 2.0 TDI 16V** 02/04 - 55 -125 kW	**22-131614**	**19-127439**	with standard chassis VA: Øa: 55 mm
B4	**1.2 TSI, 1.4, 1.4 TSI, 1.6, 1.6 FSI, 1.6 GreenLine, 1.6 LPG, 1.6 TDI, 1.8 TSI, 1.9 TDI, 2.0 FSI, 2.0 RS, 2.0 TDI, 2.0 TDI 16V** 02/04 - 55 -147 kW	**22-139184**	**19-127439**	with sports suspension VA: Øa: 50 mm
B4	**1.2 TSI, 1.4, 1.4 TSI, 1.6, 1.6 FSI, 1.6 GreenLine, 1.6 LPG, 1.6 TDI, 1.8 TSI, 1.9 TDI, 2.0 FSI, 2.0 RS, 2.0 TDI, 2.0 TDI 16V** 02/04 - 55 -147 kW	**22-139191**	**19-127439**	with sports suspension VA: Øa: 55 mm
B6 Sport	**1.2 TSI, 1.4, 1.4 TSI, 1.6, 1.6 FSI, 1.6 GreenLine, 1.6 LPG, 1.6 TDI, 1.8 TSI, 1.9 TDI, 2.0 FSI, 2.0 RS, 2.0 TDI, 2.0 TDI 16V** 02/04 - 55 -147 kW	**35-113751**	**24-172936**	with standard chassis VA: Øa: 50 mm
B6 Sport	**1.2 TSI, 1.4, 1.4 TSI, 1.6, 1.6 FSI, 1.6 GreenLine, 1.6 LPG, 1.6 TDI, 1.8 TSI, 1.9 TDI, 2.0 FSI, 2.0 RS, 2.0 TDI, 2.0 TDI 16V** 02/04 - 55 -147 kW	**35-108177**	**24-172936**	with standard chassis VA: Øa: 55 mm
B8	**1.2 TSI, 1.4, 1.4 TSI, 1.6, 1.6 FSI, 1.6 GreenLine, 1.6 LPG, 1.6 TDI, 1.8 TSI, 1.9 TDI, 2.0 FSI, 2.0 RS, 2.0 TDI, 2.0 TDI 16V** 02/04 - 55 -147 kW	**35-113768**	**24-178006**	with sports suspension VA: Øa: 50 mm
B8	**1.2 TSI, 1.4, 1.4 TSI, 1.6, 1.6 FSI, 1.6 GreenLine, 1.6 LPG, 1.6 TDI, 1.8 TSI, 1.9 TDI, 2.0 FSI, 2.0 RS, 2.0 TDI, 2.0 TDI 16V** 02/04 - 55 -147 kW	**35-108191**	**24-178006**	with sports suspension VA: Øa: 55 mm
B12 PK	**1.4, 1.4 TSI, 1.6, 1.6 FSI, 1.6 LPG** 02/04 - 55 -90 kW	**46-182562**		outside diameter strut 50 mm; Conditions see certificates VA: lowering (expertise): 30 mm; axle load to: 1050 kg HA: lowering (expertise): 30 mm; axle load to: 1100 kg
B12 PK	**1.4, 1.4 TSI, 1.6, 1.6 FSI, 1.6 LPG** 02/04 - 55 -90 kW	**46-000279**		outside diameter strut 55 mm; Conditions see certificates VA: lowering (expertise): 30 mm; axle load to: 1050 kg HA: lowering (expertise): 30 mm; axle load to: 1100 kg

S

SKODA				
SKODA OCTAVIA (1Z3)				
B12 PK	**1.6 TDI, 1.8 TSI, 1.9 TDI, 2.0 FSI, 2.0 RS, 2.0 TDI, 2.0 TDI 16V** 02/04 - 77 -147 kW	**46-182579**		outside diameter strut 50 mm; Conditions see certificates VA: lowering (expertise): 30 mm; axle load to: 1100 kg HA: lowering (expertise): 30 mm; axle load to: 1100 kg
B12 PK	**1.6 TDI, 1.8 TSI, 1.9 TDI, 2.0 FSI, 2.0 RS, 2.0 TDI, 2.0 TDI 16V** 02/04 - 77 -147 kW	**46-000286**		outside diameter strut 55 mm; Conditions see certificates VA: lowering (expertise): 30 mm; axle load to: 1100 kg HA: lowering (expertise): 30 mm; axle load to: 1100 kg
B14	**1.2 TSI, 1.4, 1.4 TSI, 1.6, 1.6 FSI, 1.6 GreenLine, 1.6 LPG, 1.6 TDI, 1.8 TSI, 1.9 TDI, 2.0 FSI, 2.0 TDI, 2.0 TDI 16V** 02/04 - 55 -125 kW	**47-128347**		outside diameter strut 50 mm; Conditions see certificates VA: lowering (expertise): 30-50 mm; axle load to: 1210 kg HA: lowering (expertise): 30-50 mm; axle load to: 1250 kg
B14	**1.2 TSI, 1.4, 1.4 TSI, 1.6, 1.6 FSI, 1.6 GreenLine, 1.6 LPG, 1.6 TDI, 1.8 TSI, 1.9 TDI, 2.0 FSI, 2.0 TDI, 2.0 TDI 16V** 02/04 - 55 -125 kW	**47-127708**		outside diameter strut 55 mm; Conditions see certificates VA: lowering (expertise): 30-50 mm; axle load to: 1210 kg HA: lowering (expertise): 30-50 mm; axle load to: 1250 kg
B14	**2.0 RS** 10/05 - 147 kW	**47-127708**		outside diameter strut 55 mm; Conditions see certificates VA: lowering (expertise): 20-30 mm; axle load to: 1200 kg HA: lowering (expertise): 10-30 mm; axle load to: 1240 kg
B16 PSS10	**1.2 TSI, 1.4, 1.4 TSI, 1.6, 1.6 FSI, 1.6 GreenLine, 1.6 LPG, 1.6 TDI, 1.8 TSI, 1.9 TDI, 2.0 FSI, 2.0 TDI, 2.0 TDI 16V** 02/04 - 55 -125 kW	**48-135238**		outside diameter strut 50 mm; Conditions see certificates VA: lowering (expertise): 30-50 mm; axle load to: 1210 kg HA: lowering (expertise): 30-50 mm; axle load to: 1250 kg
B16 PSS10	**1.2 TSI, 1.4, 1.4 TSI, 1.6, 1.6 FSI, 1.6 GreenLine, 1.6 LPG, 1.6 TDI, 1.8 TSI, 1.9 TDI, 2.0 FSI, 2.0 TDI, 2.0 TDI 16V** 02/04 - 55 -125 kW	**48-135245**		outside diameter strut 55 mm; Conditions see certificates VA: lowering (expertise): 30-50 mm; axle load to: 1210 kg HA: lowering (expertise): 30-50 mm; axle load to: 1250 kg
B16 PSS10	**2.0 RS** 10/05 - 147 kW	**48-135245**		outside diameter strut 55 mm; Conditions see certificates VA: lowering (expertise): 20-30 mm; axle load to: 1210 kg HA: lowering (expertise): 10-30 mm; axle load to: 1250 kg
B16 RC	**1.2 TSI, 1.4, 1.4 TSI, 1.6, 1.6 FSI, 1.6 GreenLine, 1.6 LPG, 1.6 TDI, 1.8 TSI, 1.9 TDI, 2.0 FSI, 2.0 RS, 2.0 TDI, 2.0 TDI 16V** 02/04 - 55 -147 kW	**49-196849**		Øa: 55 mm; mark: G07, G08, G09, G11; Conditions see certificates VA: lowering (expertise): 30-50 mm; axle load to: 1140 kg HA: lowering (expertise): 30-50 mm; axle load to: 1040 kg
B16 BCS	**2.0 RS, 2.0 TDI** 10/05 - 125 -147 kW	**48-215909**		outside diameter strut 55 mm; Conditions see certificates VA: lowering (expertise): 10-20 mm; axle load to: 1210 kg HA: lowering (expertise): 10-30 mm; axle load to: 1095 kg
SKODA OCTAVIA Combi (1Z5)				
B1	**1.2 TSI, 1.4, 1.4 TSI, 1.6, 1.6 FSI, 1.6 GreenLine, 1.6 LPG, 1.6 TDI, 1.6 TDI 4x4, 1.8 TSI, 1.8 TSI 4x4, 1.9 TDI, 1.9 TDI 4x4, 2.0 FSI, 2.0 TDI, 2.0 TDI 4x4, 2.0 TDI 16V, 2.0 TDI 16V 4x4, 2.0 TDI 4x4** 02/04 - 55 -125 kW	**12-224074**	**12-226535** ⓘ	VA: with ball bearing
B3	**1.2 TSI** 02/10 - 77 kW	**37-133030**	**36-148158**	with standard chassis
B3	**1.4, 1.4 TSI, 1.6, 1.6 FSI, 1.6 GreenLine, 1.6 LPG** 02/04 - 55 -90 kW	**36-199594**	**36-148158**	with standard chassis
B3	**2.0 RS, 2.0 TDI** 10/05 - 125 -147 kW	**36-199600**	**36-199655**	with standard chassis
B3	**1.6 TDI, 1.8 TSI, 1.9 TDI, 2.0 FSI** 11/04 - 77 -118 kW	**37-133757**	**36-148158**	with standard chassis
B3	**1.6 TDI 4x4, 1.8 TSI 4x4** 11/08 - 77 -118 kW		**36-199570**	with standard chassis
B3	**1.9 TDI 4x4, 2.0 FSI 4x4, 2.0 TDI 4x4, 2.0 TDI 16V 4x4, 2.0 TDI 4x4** 11/04 - 77 -110 kW	**36-199617**	**36-199570**	with standard chassis

S

SKODA

SKODA OCTAVIA Combi (1Z5)

B3	**2.0 TDI, 2.0 TDI 16V** 02/04 - 81 -103 kW	**37-147747**	**36-148158**	with standard chassis
B4	**1.2 TSI, 1.4, 1.4 TSI, 1.6, 1.6 FSI, 1.6 GreenLine, 1.6 LPG, 1.6 TDI, 1.6 TDI 4x4, 1.8 TSI, 1.8 TSI 4x4, 1.9 TDI, 1.9 TDI 4x4, 2.0 FSI, 2.0 FSI 4x4, 2.0 TDI, 2.0 TDI 4x4, 2.0 TDI 16V, 2.0 TDI 16V 4x4, 2.0 TDI 4x4** 02/04 - 55 -125 kW	**22-131607**	**19-127439**	with standard chassis VA: Øa: 50 mm
B4	**1.2 TSI, 1.4, 1.4 TSI, 1.6, 1.6 FSI, 1.6 GreenLine, 1.6 LPG, 1.6 TDI, 1.6 TDI 4x4, 1.8 TSI, 1.8 TSI 4x4, 1.9 TDI, 1.9 TDI 4x4, 2.0 FSI, 2.0 FSI 4x4, 2.0 TDI, 2.0 TDI 4x4, 2.0 TDI 16V, 2.0 TDI 16V 4x4, 2.0 TDI 4x4** 02/04 - 55 -125 kW	**22-131614**	**19-127439**	with standard chassis VA: Øa: 55 mm
B4	**1.2 TSI, 1.4, 1.4 TSI, 1.6, 1.6 FSI, 1.6 GreenLine, 1.6 LPG, 1.6 TDI, 1.6 TDI 4x4, 1.8 TSI, 1.8 TSI 4x4, 1.9 TDI, 1.9 TDI 4x4, 2.0 FSI, 2.0 FSI 4x4, 2.0 TDI, 2.0 TDI 4x4, 2.0 TDI 16V, 2.0 TDI 16V 4x4, 2.0 TDI 4x4** 02/04 - 55 -125 kW	**22-139184**	**19-127439**	with sports suspension VA: Øa: 50 mm
B4	**1.2 TSI, 1.4, 1.4 TSI, 1.6, 1.6 FSI, 1.6 GreenLine, 1.6 LPG, 1.6 TDI, 1.6 TDI 4x4, 1.8 TSI, 1.8 TSI 4x4, 1.9 TDI, 1.9 TDI 4x4, 2.0 FSI, 2.0 FSI 4x4, 2.0 RS, 2.0 TDI, 2.0 TDI 4x4, 2.0 TDI 16V, 2.0 TDI 16V 4x4, 2.0 TDI 4x4** 02/04 - 55 -147 kW	**22-139191**	**19-127439**	with sports suspension VA: Øa: 55 mm
B6 Sport	**1.2 TSI, 1.4, 1.4 TSI, 1.6, 1.6 FSI, 1.6 GreenLine, 1.6 LPG, 1.6 TDI, 1.6 TDI 4x4, 1.8 TSI, 1.8 TSI 4x4, 1.9 TDI, 1.9 TDI 4x4, 2.0 FSI, 2.0 FSI 4x4, 2.0 TDI, 2.0 TDI 4x4, 2.0 TDI 16V, 2.0 TDI 16V 4x4, 2.0 TDI 4x4** 02/04 - 55 -125 kW	**35-113751**	**24-172936**	VA: Øa: 50 mm
B6 Sport	**1.2 TSI, 1.4, 1.4 TSI, 1.6, 1.6 FSI, 1.6 GreenLine, 1.6 LPG, 1.6 TDI, 1.6 TDI 4x4, 1.8 TSI, 1.8 TSI 4x4, 1.9 TDI, 1.9 TDI 4x4, 2.0 FSI, 2.0 FSI 4x4, 2.0 RS, 2.0 TDI, 2.0 TDI 4x4, 2.0 TDI 16V, 2.0 TDI 16V 4x4, 2.0 TDI 4x4** 02/04 - 55 -147 kW	**35-108177**	**24-172936**	VA: Øa: 55 mm
B8	**1.2 TSI, 1.4, 1.4 TSI, 1.6, 1.6 FSI, 1.6 GreenLine, 1.6 LPG, 1.6 TDI, 1.6 TDI 4x4, 1.8 TSI, 1.8 TSI 4x4, 1.9 TDI, 1.9 TDI 4x4, 2.0 FSI, 2.0 FSI 4x4, 2.0 TDI, 2.0 TDI 4x4, 2.0 TDI 16V, 2.0 TDI 16V 4x4, 2.0 TDI 4x4** 02/04 - 55 -125 kW	**35-113768**	**24-178006**	VA: Øa: 50 mm
B8	**1.2 TSI, 1.4, 1.4 TSI, 1.6, 1.6 FSI, 1.6 GreenLine, 1.6 LPG, 1.6 TDI, 1.6 TDI 4x4, 1.8 TSI, 1.8 TSI 4x4, 1.9 TDI 4x4, 2.0 FSI, 2.0 FSI 4x4, 2.0 RS, 2.0 TDI, 2.0 TDI 4x4, 2.0 TDI 16V, 2.0 TDI 16V 4x4, 2.0 TDI 4x4** 02/04 - 55 -147 kW	**35-108191**	**24-178006**	VA: Øa: 55 mm
B12 PK	**1.4, 1.4 TSI, 1.6, 1.6 FSI** 02/04 - 10/08 55 -90 kW	**46-182586**		outside diameter strut 50 mm; Conditions see certificates VA: lowering (expertise): 30 mm; axle load to: 1050 kg HA: lowering (expertise): 30 mm; axle load to: 1150 kg

S

SKODA				
SKODA OCTAVIA Combi (1Z5)				
B12 PK	**1.4, 1.4 TSI, 1.6, 1.6 FSI** 02/04 - 10/08 55 -90 kW	**46-000293**		outside diameter strut 55 mm; Conditions see certificates VA: lowering (expertise): 30 mm; axle load to: 1050 kg HA: lowering (expertise): 30 mm; axle load to: 1150 kg
B12 PK	**1.6 TDI, 1.9 TDI, 2.0 FSI, 2.0 RS, 2.0 TDI, 2.0 TDI 16V** 02/04 - 77 -147 kW	**46-182593**		outside diameter strut 50 mm; Conditions see certificates VA: lowering (expertise): 30 mm; axle load to: 1100 kg HA: lowering (expertise): 30 mm; axle load to: 1150 kg
B12 PK	**1.6 TDI, 1.9 TDI, 2.0 FSI, 2.0 RS, 2.0 TDI, 2.0 TDI 16V** 02/04 - 77 -147 kW	**46-000354**		outside diameter strut 55 mm; Conditions see certificates VA: lowering (expertise): 30 mm; axle load to: 1100 kg HA: lowering (expertise): 30 mm; axle load to: 1150 kg
B14	**1.2 TSI, 1.4, 1.4 TSI, 1.6, 1.6 FSI, 1.6 GreenLine, 1.6 LPG, 1.6 TDI, 1.6 TDI 4x4, 1.8 TSI, 1.8 TSI 4x4, 1.9 TDI, 1.9 TDI 4x4, 2.0 FSI, 2.0 FSI 4x4, 2.0 TDI, 2.0 TDI 4x4, 2.0 TDI 16V, 2.0 TDI 16V 4x4, 2.0 TDI 4x4** 02/04 - 55 -125 kW	**47-128347**		outside diameter strut 50 mm; Conditions see certificates VA: lowering (expertise): 30-50 mm; axle load to: 1210 kg HA: lowering (expertise): 30-50 mm; axle load to: 1250 kg
B14	**1.2 TSI, 1.4, 1.4 TSI, 1.6, 1.6 FSI, 1.6 GreenLine, 1.6 LPG, 1.6 TDI, 1.6 TDI 4x4, 1.8 TSI, 1.8 TSI 4x4, 1.9 TDI, 1.9 TDI 4x4, 2.0 FSI, 2.0 FSI 4x4, 2.0 TDI, 2.0 TDI 4x4, 2.0 TDI 16V, 2.0 TDI 16V 4x4, 2.0 TDI 4x4** 02/04 - 55 -125 kW	**47-127708**		outside diameter strut 55 mm; Conditions see certificates VA: lowering (expertise): 30-50 mm; axle load to: 1210 kg HA: lowering (expertise): 30-50 mm; axle load to: 1250 kg
B14	**2.0 RS** 10/05 - 147 kW	**47-127708**		outside diameter strut 55 mm; Conditions see certificates VA: lowering (expertise): 20-30 mm; axle load to: 1200 kg HA: lowering (expertise): 10-30 mm; axle load to: 1240 kg
B16 PSS10	**1.2 TSI, 1.4, 1.4 TSI, 1.6, 1.6 FSI, 1.6 GreenLine, 1.6 LPG, 1.6 TDI, 1.6 TDI 4x4, 1.8 TSI, 1.8 TSI 4x4, 1.9 TDI, 1.9 TDI 4x4, 2.0 FSI, 2.0 FSI 4x4, 2.0 TDI, 2.0 TDI 4x4, 2.0 TDI 16V, 2.0 TDI 16V 4x4, 2.0 TDI 4x4** 02/04 - 55 -125 kW	**48-135238**		outside diameter strut 50 mm; Conditions see certificates VA: lowering (expertise): 30-50 mm; axle load to: 1210 kg HA: without ride height adjustment; lowering (expertise): 30-50 mm; axle load to: 1250 kg
B16 PSS10	**1.2 TSI, 1.4, 1.4 TSI, 1.6, 1.6 FSI, 1.6 GreenLine, 1.6 LPG, 1.6 TDI, 1.6 TDI 4x4, 1.8 TSI, 1.8 TSI 4x4, 1.9 TDI, 1.9 TDI 4x4, 2.0 FSI, 2.0 FSI 4x4, 2.0 TDI, 2.0 TDI 4x4, 2.0 TDI 16V, 2.0 TDI 16V 4x4, 2.0 TDI 4x4** 02/04 - 55 -125 kW	**48-135245**		outside diameter strut 55 mm; Conditions see certificates VA: lowering (expertise): 30-50 mm; axle load to: 1210 kg HA: lowering (expertise): 30-50 mm; axle load to: 1250 kg
B16 PSS10	**2.0 RS** 10/05 - 147 kW	**48-135245**		outside diameter strut 55 mm; Conditions see certificates VA: lowering (expertise): 20-30 mm; axle load to: 1210 kg HA: lowering (expertise): 10-30 mm; axle load to: 1250 kg
B16 RC	**1.2 TSI, 1.4, 1.4 TSI, 1.6, 1.6 FSI, 1.6 GreenLine, 1.6 LPG, 1.6 TDI, 1.6 TDI 4x4, 1.8 TSI, 1.8 TSI 4x4, 1.9 TDI, 1.9 TDI 4x4, 2.0 FSI, 2.0 FSI 4x4, 2.0 RS, 2.0 TDI, 2.0 TDI 4x4, 2.0 TDI 16V, 2.0 TDI 16V 4x4, 2.0 TDI 4x4** 02/04 - 55 -147 kW	**49-196849**		Øa: 55 mm; mark: G07, G08, G09, G11; Conditions see certificates VA: lowering (expertise): 30-50 mm; axle load to: 1140 kg HA: lowering (expertise): 30-50 mm; axle load to: 1040 kg
B16 BCS	**2.0 RS, 2.0 TDI** 10/05 - 125 -147 kW	**48-215909**		outside diameter strut 55 mm; Conditions see certificates VA: lowering (expertise): 10-20 mm; axle load to: 1210 kg HA: lowering (expertise): 10-30 mm; axle load to: 1095 kg
SKODA ROOMSTER (5J)				
B1	**1.2, 1.2 TDI, 1.2 TSI, 1.4, 1.4 TDI, 1.6, 1.6 TDI, 1.9 TDI** 05/06 - 03/10 47 -77 kW	**12-225323**	**12-117840**	VA: with ball bearing
B3	**1.2, 1.2 TSI, 1.4, 1.6** 05/06 - 47 -77 kW	**36-199884**	*36-199525*	with standard chassis

S

SKODA				
SKODA ROOMSTER (5J)				
B3	**1.2, 1.2 TDI, 1.2 TSI, 1.4, 1.4 TDI, 1.6, 1.6 TDI, 1.9 TDI** 05/06 - 03/10 47 -77 kW		*36-201969*	with standard chassis; Heavy Duty Version .
B3	**1.2 TDI, 1.4 TDI, 1.6 TDI, 1.9 TDI** 09/06 - 51 -77 kW	*36-199587*	*36-199525*	with standard chassis
B4	**1.2, 1.2 TDI, 1.2 TSI, 1.4, 1.4 TDI, 1.6, 1.6 TDI, 1.9 TDI** 05/06 - 03/10 47 -77 kW	**22-105813** **11-101321** SP	**19-109572** **11-106470** SP	with standard chassis
SKODA PRAKTIK				
B4	**1.2, 1.2 TDI, 1.2 TSI, 1.4, 1.4 TDI** 03/07 - 51 -63 kW	**22-105813** **11-101321** SP	**19-109572** **11-106470** SP	with standard chassis
B6 Sport	**1.2, 1.2 TDI, 1.2 TSI, 1.4, 1.4 TDI** 03/07 - 51 -63 kW	**35-052173**	**24-067898** **11-106470** SP	
B8	**1.2, 1.2 TDI, 1.2 TSI, 1.4, 1.4 TDI** 03/07 - 51 -63 kW	**35-052180**	**24-067904** **11-106470** SP	
SKODA SUPERB (3U4)				
B3	**1.8 T** 02/02 - 03/08 110 kW	**37-131371**	**36-147977**	with standard chassis
B3	**1.8 T** 02/02 - 03/08 110 kW	**37-131388**		with standard chassis; Heavy Duty Version .
B3	**1.8 T, 1.9 TDI, 2.0, 2.0 TDI, 2.5 TDI, 2.8 V6** 02/02 - 03/08 74 -142 kW		**38-131349**	with off-road suspension; Heavy Duty Version .
B3	**2.0** 02/02 - 03/08 85 -91 kW	**37-131395**	**36-147977**	with standard chassis
B3	**2.0** 02/02 - 03/08 85 -91 kW	**37-131371**		with standard chassis; Heavy Duty Version .
B3	**1.9 TDI, 2.0 TDI, 2.8 V6** 02/02 - 03/08 74 -142 kW	**37-131388**	**36-147977**	with standard chassis
B3	**1.9 TDI, 2.0 TDI, 2.8 V6** 02/02 - 03/08 74 -142 kW	**37-131449**		with standard chassis; Heavy Duty Version .
B3	**2.5 TDI** 02/02 - 03/08 114 -120 kW	**37-131449**	**36-147977**	with standard chassis
B4	**1.8 T, 1.9 TDI, 2.0, 2.0 TDI, 2.5 TDI, 2.8 V6** 02/02 - 03/08 74 -142 kW	**19-119939**	**19-029443** **11-149835** SP	with standard chassis
B6 Sport	**1.8 T, 1.9 TDI, 2.0, 2.0 TDI, 2.5 TDI, 2.8 V6** 02/02 - 03/08 74 -142 kW	**24-065122**	**24-065429**	
B8	**1.8 T, 1.9 TDI, 2.0, 2.0 TDI, 2.5 TDI, 2.8 V6** 02/02 - 03/08 74 -142 kW	**24-065139**	**24-065436**	
B12 PK	**1.8 T, 1.9 TDI, 2.0** 02/02 - 03/08 74 -110 kW	**46-182654**		Conditions see certificates VA: lowering (expertise): 30 mm; axle load to: 1160 kg HA: without ride height adjustment; lowering (expertise): 30 mm; axle load to: 1090 kg
B12 PK	**2.5 TDI, 2.8 V6** 02/02 - 03/08 114 -142 kW	**46-182661**		Conditions see certificates VA: lowering (expertise): 30 mm; axle load to: 1230 kg HA: without ride height adjustment; lowering (expertise): 30 mm; axle load to: 1090 kg

S

SKODA				
SKODA SUPERB (3U4)				
B14	**1.8 T, 1.9 TDI, 2.0, 2.0 TDI, 2.5 TDI, 2.8 V6** 02/02 - 03/08 74 -142 kW	**47-124806**		Conditions see certificates VA: lowering (expertise): 35-55 mm; axle load to: 1230 kg HA: lowering (expertise): 35-55 mm; axle load to: 1200 kg
B16 PSS9	**1.8 T, 1.9 TDI, 2.0, 2.0 TDI, 2.5 TDI, 2.8 V6** 02/02 - 03/08 74 -142 kW	**48-088749**		Conditions see certificates VA: lowering (expertise): 35-55 mm; axle load to: 1230 kg HA: lowering (expertise): 35-55 mm; axle load to: 1200 kg
SKODA SUPERB (3T4)				
B1	**1.4 TSI, 1.6 TDI, 1.8 TSI, 1.8 TSI 4x4, 1.9 TDI, 2.0 TDI, 2.0 TDI 16V, 2.0 TDI 16V 4x4, 2.0 TDI 4x4, 2.0 TSI, 3.6 4x4, 3.6 FSI 4x4** 03/08 - 77 -191 kW	**12-224074**	**12-224081**	VA: with ball bearing HA: without ball bearing
B4	**1.4 TSI, 1.6 TDI, 1.8 TSI, 1.8 TSI 4x4, 1.9 TDI, 2.0 TDI, 2.0 TDI 16V, 2.0 TDI 16V 4x4, 2.0 TDI 4x4, 2.0 TSI, 3.6 4x4, 3.6 FSI 4x4** 03/08 - 77 -191 kW	**22-151056**	**19-151069**	with standard chassis VA: Øa: 55 mm
B4	**1.4 TSI, 1.6 TDI, 1.8 TSI, 1.8 TSI 4x4, 1.9 TDI, 2.0 TDI, 2.0 TDI 16V, 2.0 TDI 16V 4x4, 2.0 TDI 4x4, 2.0 TSI, 3.6 4x4, 3.6 FSI 4x4** 03/08 - 77 -191 kW	**22-151070**	**19-151083**	with sports suspension VA: Øa: 55 mm
B6 Sport	**1.4 TSI, 1.6 TDI, 1.8 TSI, 1.8 TSI 4x4, 1.9 TDI, 2.0 TDI, 2.0 TDI 16V, 2.0 TDI 16V 4x4, 2.0 TDI 4x4, 2.0 TSI, 3.6 4x4, 3.6 FSI 4x4** 03/08 - 77 -191 kW	**35-122074**	**24-172936**	VA: Øa: 55 mm
B8	**1.4 TSI, 1.6 TDI, 1.8 TSI, 1.8 TSI 4x4, 1.9 TDI, 2.0 TDI, 2.0 TDI 16V, 2.0 TDI 16V 4x4, 2.0 TDI 4x4, 2.0 TSI, 3.6 4x4, 3.6 FSI 4x4** 03/08 - 77 -191 kW	**35-122081**	**24-178006**	with sports suspension VA: Øa: 55 mm
B12 PK	**1.4 TSI, 1.6 TDI, 1.8 TSI, 1.9 TDI, 2.0 TDI, 2.0 TDI 16V, 2.0 TSI** 03/08 - 77 -147 kW	**46-182685**		outside diameter strut 55 mm; Conditions see certificates VA: lowering (expertise): 30 mm; axle load to: 1210 kg HA: without ride height adjustment; lowering (expertise): 30 mm; axle load to: 1250 kg
B14	**1.4 TSI, 1.6 TDI, 1.8 TSI, 1.8 TSI 4x4, 1.9 TDI, 2.0 TDI, 2.0 TDI 16V, 2.0 TDI 16V 4x4, 2.0 TDI 4x4, 2.0 TSI, 3.6 4x4, 3.6 FSI 4x4** 03/08 - 77 -191 kW	**47-127708**		outside diameter strut 55 mm; Conditions see certificates VA: lowering (expertise): 30-50 mm; axle load to: 1210 kg HA: lowering (expertise): 30-50 mm; axle load to: 1250 kg
B16 PSS10	**1.4 TSI, 1.6 TDI, 1.8 TSI, 1.8 TSI 4x4, 1.9 TDI, 2.0 TDI, 2.0 TDI 16V, 2.0 TDI 16V 4x4, 2.0 TDI 4x4, 2.0 TSI, 3.6 4x4, 3.6 FSI 4x4** 03/08 - 77 -191 kW	**48-135245**		outside diameter strut 55 mm; Conditions see certificates VA: lowering (expertise): 30-50 mm; axle load to: 1210 kg HA: lowering (expertise): 30-50 mm; axle load to: 1250 kg
B16 RC	**1.4 TSI, 1.6 TDI, 1.8 TSI, 1.8 TSI 4x4, 1.9 TDI, 2.0 TDI, 2.0 TDI 16V, 2.0 TDI 16V 4x4, 2.0 TDI 4x4, 2.0 TSI, 3.6 4x4, 3.6 FSI 4x4** 03/08 - 77 -191 kW	**49-196849**		Øa: 55 mm; mark: G07, G08, G09, G11; Conditions see certificates VA: lowering (expertise): 30-50 mm; axle load to: 1140 kg HA: lowering (expertise): 30-50 mm; axle load to: 1040 kg
B16 BCS	**3.6 4x4, 3.6 FSI 4x4** 11/08 - 191 kW	**48-215909**		outside diameter strut 55 mm; Conditions see certificates VA: lowering (expertise): 10-20 mm; axle load to: 1210 kg HA: lowering (expertise): 10-30 mm; axle load to: 1095 kg
SKODA SUPERB Estate (3T5)				
B1	**1.4 TSI, 1.6 TDI, 1.8 TSI, 1.8 TSI 4x4, 1.9 TDI, 2.0 TDI, 2.0 TDI 16V 4x4, 2.0 TDI 4x4, 2.0 TSI, 3.6 V6 4x4** 10/09 - 77 -191 kW	**12-224074**	**12-224081**	VA: with ball bearing HA: without ball bearing

S

SKODA

SKODA SUPERB Estate (3T5)

B4	**1.4 TSI, 1.6 TDI, 1.8 TSI, 1.8 TSI 4x4, 1.9 TDI, 2.0 TDI, 2.0 TDI 16V 4x4, 2.0 TDI 4x4, 2.0 TSI, 3.6 V6 4x4** 10/09 - 77 -191 kW	**22-151056**	**19-151069**	with standard chassis VA: Øa: 55 mm
B4	**1.4 TSI, 1.6 TDI, 1.8 TSI, 1.8 TSI 4x4, 1.9 TDI, 2.0 TDI, 2.0 TDI 16V 4x4, 2.0 TDI 4x4, 2.0 TSI, 3.6 V6 4x4** 10/09 - 77 -191 kW	**22-151070**	**19-151083**	with sports suspension VA: Øa: 55 mm
B6 Sport	**1.4 TSI, 1.6 TDI, 1.8 TSI, 1.8 TSI 4x4, 1.9 TDI, 2.0 TDI, 2.0 TDI 16V 4x4, 2.0 TDI 4x4, 2.0 TSI, 3.6 V6 4x4** 10/09 - 77 -191 kW	**35-122074**	**24-172936**	VA: Øa: 55 mm
B8	**1.4 TSI, 1.6 TDI, 1.8 TSI, 1.8 TSI 4x4, 1.9 TDI, 2.0 TDI, 2.0 TDI 16V 4x4, 2.0 TDI 4x4, 2.0 TSI, 3.6 V6 4x4** 10/09 - 77 -191 kW	**35-122081**	**24-178006**	with sports suspension VA: Øa: 55 mm
B12 PK	**1.4 TSI, 1.6 TDI, 1.8 TSI, 1.9 TDI, 2.0 TDI, 2.0 TSI** 10/09 - 77 -147 kW	**46-182685**		outside diameter strut 55 mm; Conditions see certificates VA: lowering (expertise): 30 mm; axle load to: 1210 kg HA: without ride height adjustment; lowering (expertise): 30 mm; axle load to: 1250 kg
B14	**1.4 TSI, 1.6 TDI, 1.8 TSI, 1.8 TSI 4x4, 1.9 TDI, 2.0 TDI, 2.0 TDI 16V 4x4, 2.0 TDI 4x4, 2.0 TSI, 3.6 V6 4x4** 10/09 - 77 -191 kW	**47-127708**		outside diameter strut 55 mm; Conditions see certificates VA: lowering (expertise): 30-50 mm; axle load to: 1210 kg HA: lowering (expertise): 30-50 mm; axle load to: 1250 kg
B16 PSS10	**1.4 TSI, 1.6 TDI, 1.8 TSI, 1.8 TSI 4x4, 1.9 TDI, 2.0 TDI, 2.0 TDI 16V 4x4, 2.0 TDI 4x4, 2.0 TSI, 3.6 V6 4x4** 10/09 - 77 -191 kW	**48-135245**		outside diameter strut 55 mm; Conditions see certificates VA: lowering (expertise): 30-50 mm; axle load to: 1210 kg HA: lowering (expertise): 30-50 mm; axle load to: 1250 kg
B16 BCS	**3.6 V6 4x4** 10/09 - 191 kW	**48-215909**		outside diameter strut 55 mm; Conditions see certificates VA: lowering (expertise): 10-20 mm; axle load to: 1210 kg HA: lowering (expertise): 10-30 mm; axle load to: 1095 kg

SKODA YETI

B1	**1.2 TSI, 1.4 TSI, 1.6 TDI, 1.8 TSI 4x4, 2.0 TDI, 2.0 TDI 4x4** 05/09 - 77 -125 kW	**12-224074**	**12-224081**	VA: with ball bearing HA: without ball bearing
B4	**1.2 TSI, 1.4 TSI, 1.6 TDI, 1.8 TSI 4x4, 2.0 TDI, 2.0 TDI 4x4** 05/09 - 77 -125 kW	**22-183712**	**19-183749**	with standard chassis; mark: G02 VA: outside diameter strut 50 mm
B4	**1.2 TSI, 1.4 TSI, 1.6 TDI, 1.8 TSI 4x4, 2.0 TDI, 2.0 TDI 4x4** 05/09 - 77 -125 kW	**22-183729**	**19-183749**	with standard chassis; mark: G06 VA: outside diameter strut 55 mm

S

SMART

SMART CITY-COUPE (MC01)

B4	**0.6, 0.8 CDI** 07/98 - 01/04 30 -40 kW	**22-102348**	**19-067971**	with leaf-spring suspension
B4	**0.6, 0.7, 0.8 CDI** 07/98 - 01/04 30 -55 kW	**22-052261**	**19-067971**	with coil-spring suspension VA: serie production spring seat must be used
B14	**0.6, 0.7** 07/98 - 01/04 33 -55 kW	**47-107632**		Spacers required for several wheel/tyre combinations; Conditions see certificates VA: lowering (expertise): 10-30 mm; axle load to: 430 kg; with coil-spring suspension HA: lowering (expertise): 10-30 mm; axle load to: 610 kg
B14	**0.8 CDI** 03/01 - 01/04 30 kW	**47-107632**		Spacers required for several wheel/tyre combinations; Conditions see certificates VA: lowering (expertise): 10-30 mm; axle load to: 430 kg; with coil-spring suspension HA: lowering (expertise): 10-30 mm; axle load from: 610 kg

SMART

SMART CITY-COUPE (MC01)

SMART CABRIO

B4	**0.6** 03/00 - 01/04 40 kW	**22-102348**	**19-067971**	with leaf-spring suspension
B4	**0.6, 0.7, 0.8 CDI** 03/00 - 01/04 30 -55 kW	**22-052261**	**19-067971**	with coil-spring suspension VA: serie production spring seat must be used
B14	**0.6, 0.7, 0.8 CDI** 03/00 - 01/04 30 -55 kW	**47-107632**		Spacers required for several wheel/tyre combinations; Conditions see certificates; with coil-spring suspension VA: lowering (expertise): 10-30 mm; axle load to: 465 kg HA: lowering (expertise): 10-30 mm; axle load to: 610 kg

SMART CROSSBLADE

B4	**0.6** 06/02 - 52 kW	**22-052261**	**19-067971**	with coil-spring suspension VA: serie production spring seat must be used
B14	**0.6** 06/02 - 52 kW	**47-107632**		Spacers required for several wheel/tyre combinations; Conditions see certificates VA: lowering (expertise): 10-30 mm; axle load to: 465 kg HA: lowering (expertise): 10-30 mm; axle load to: 610 kg

SMART ROADSTER

B4	**0.7** 04/03 - 45 -60 kW	**22-052261**	**19-067971**	VA: serie production spring seat must be used
B14	**0.7, 0.7 Brabus** 04/03 - 45 -74 kW	**47-107632**		Spacers required for several wheel/tyre combinations; Conditions see certificates VA: lowering (expertise): 10-30 mm; axle load to: 465 kg HA: lowering (expertise): 10-30 mm; axle load to: 610 kg

SMART ROADSTER Coupe

B4	**0.7** 04/03 - 45 -60 kW	**22-052261**	**19-067971**	VA: serie production spring seat must be used
B14	**0.7, 0.7 Brabus** 04/03 - 45 -74 kW	**47-107632**		Spacers required for several wheel/tyre combinations; Conditions see certificates VA: lowering (expertise): 10-30 mm; axle load to: 465 kg HA: lowering (expertise): 10-30 mm; axle load to: 610 kg

SMART FORTWO Coupe

B4	**0.7, 0.8 CDI** 01/04 - 30 -55 kW	**22-052261**	**19-067971**	with coil-spring suspension VA: serie production spring seat must be used
B14	**0.7, 0.8 CDI** 01/04 - 30 -55 kW	**47-107632**		Spacers required for several wheel/tyre combinations; Conditions see certificates; axle load to: 430 kg; with coil-spring suspension VA: lowering (expertise): 10-30 mm HA: lowering (expertise): 10-30 mm

SMART FORTWO cabrio

B4	**0.7, 0.8 CDI** 01/04 - 30 -55 kW	**22-052261**	**19-067971**	with coil-spring suspension VA: serie production spring seat must be used
B14	**0.7, 0.8 CDI** 01/04 - 30 -55 kW	**47-107632**		Spacers required for several wheel/tyre combinations; Conditions see certificates; axle load to: 465 kg; with coil-spring suspension VA: lowering (expertise): 10-30 mm HA: lowering (expertise): 10-30 mm

SMART FORFOUR

B3	**1.1, 1.3, 1.5** 01/04 - 47 -90 kW	**36-216147**	i.V.	with standard chassis
B4	**1.1, 1.3, 1.5, 1.5 BRABUS, 1.5 CDI** 09/04 - 47 -130 kW		**19-166278**	

S

SMART				
SMART FORTWO Coupe				
B4	**0.8 CDi, 1.0, 1.0 Turbo** 01/07 - 33 -62 kW	**22-145697**	**24-126793**	VA: serie production spring seat must be used
B14	**0.8 CDi, 1.0, 1.0 Turbo** 01/07 - 33 -72 kW	**47-165403**		Conditions see certificates VA: lowering (expertise): 10-20 mm; axle load to: 440 kg HA: lowering (expertise): 10-30 mm; axle load to: 660 kg
SMART FORTWO Cabrio				
B4	**0.8 CDi, 1.0, 1.0 Turbo** 01/07 - 33 -62 kW	**22-145697**	**24-126793**	VA: serie production spring seat must be used
B14	**0.8 CDi, 1.0, 1.0 Turbo** 01/07 - 33 -75 kW	**47-165403**		Conditions see certificates VA: lowering (expertise): 10-20 mm; axle load to: 440 kg HA: lowering (expertise): 10-30 mm; axle load to: 660 kg
SSANGYONG				
SSANGYONG KORANDO (K4)				
B6 Offroad	**2.2 D** 12/88 - 12/96 50 kW	**24-002509**	**24-002608**	
SSANGYONG KORANDO (KJ)				
B4	**2.0, 2.3, 2.3 D, 2.3 TDiC 4x4, 2.9 D, 2.9 TD, 3.2** 12/96 - 58 -162 kW	**19-140407**	**19-140414**	
SSANGYONG KORANDO Cabrio (KJ)				
B4	**2.3, 2.9 D, 2.9 TD, 3.2** 06/97 - 72 -162 kW	**19-140407**	**19-140414**	
SSANGYONG MUSSO (FJ)				
B6 Offroad	**2.0, 2.3, 2.3 D, 2.9 D, 2.9 TD, 3.2** 06/96 - 59 -162 kW	**24-016766**	**24-020787**	
SSANGYONG MUSSO SPORTS				
B6 Offroad	**2.9 D** 08/04 - 88 kW	**24-016766**	**24-020787**	
SUBARU				
SUBARU FORESTER (SF)				
B4	**2.0, 2.0 S Turbo** 08/97 - 09/02 90 -125 kW			with standard chassis
B4	**2.0** 08/97 - 05/02 90 -92 kW		*22-049308*	Not for France HA: without ride height adjustment
B4	**2.0 S Turbo** 04/01 - 05/02 130 kW			with standard chassis
SUBARU FORESTER (SG)				
B4	**2.0, 2.0 S Turbo** 09/02 - 92 -130 kW	**22-165756** **22-165763**	i.V. i.V.	Not for France; with standard chassis; without ride height adjustment VA: -> 12/02
B4	**2.0, 2.0 S Turbo, 2.0 X, 2.5, 2.5 RX Nato AWD, 2.5 XT** 09/02 - 92 -169 kW	**22-166029** **22-166036**	i.V. i.V.	Not for France; with standard chassis; without ride height adjustment VA: 01/03 ->
B4	**2.0, 2.0 S Turbo** 09/02 - 92 -130 kW	**22-165756** **22-165763**		with standard chassis; without ride height adjustment VA: -> 12/02

S

SUBARU				
SUBARU FORESTER (SG)				
B4	**2.0, 2.0 S Turbo, 2.0 X, 2.5, 2.5 RX Nato AWD, 2.5 XT** 09/02 - 92 -169 kW	**22-166029** **22-166036**		with standard chassis; without ride height adjustment VA: 01/03 ->
SUBARU IMPREZA Saloon (GC)				
B16 PSS9	**1.5, 1.6 i, 1.6 i 4WD, 1.6 i 4WD, 1.8, 1.8 i 4WD, 2.0, 2.0 AWD, 2.0 i 4WD, 2.0 Turbo GT 4WD, 2.2 GX AWD** 03/94 - 09/00 66 -206 kW	**48-086035**		Without roadworthy certificate VA: lowering (expertise): 50 mm HA: lowering (expertise): 35 mm
SUBARU IMPREZA Estate (GF)				
B16 PSS9	**1.5 L, 1.6, 1.6 i, 1.6 i 4WD, 1.6 i 4WD, 1.8, 1.8 i 4WD, 2.0, 2.0 4WD, 2.0 16V, 2.0 i Turbo 4WD, 2.0 Turbo GT 4WD, 2.2 GX AWD** 11/95 - 12/00 66 -160 kW	**48-086035**		Without roadworthy certificate VA: lowering (expertise): 50 mm HA: lowering (expertise): 35 mm
SUBARU IMPREZA Saloon (GD, GG)				
B14	**1.5, 1.5 LX, 1.6, 2.0, 2.0 All-wheel Drive, 2.0 R, 2.0 WRX STi, 2.0 WRX Turbo, 2.2 GX, 2.4 WRX, 2.4 WRX ST1, 2.5 All-wheel Drive, 2.5 AWD** 03/01 - CH-Nr. 70 -235 kW	**47-101791**		-> CH.Nr.: XXXXXXXXX4XXXXXXX; fixing hole pitches at the front 65 mm; Conditions see certificates VA: lowering (expertise): 25-45 mm; axle load to: 1030 kg HA: lowering (expertise): 20-40 mm; axle load to: 920 kg
B14	**1.5, 1.5 AWD, 1.5 LX, 1.6, 2.0, 2.0 All-wheel Drive, 2.0 AWD, 2.0 R, 2.0 WRX STi, 2.0 WRX Turbo, 2.2 GX, 2.4 WRX, 2.4 WRX ST1, 2.5 All-wheel Drive, 2.5 AWD** CH-Nr. - 70 -235 kW	**47-124226**		CH.Nr.: XXXXXXXXX5XXXXXXX ->; fixing hole pitches at the front 75 mm; Conditions see certificates VA: lowering (expertise): 20-40 mm HA: lowering (expertise): 30-40 mm
B16 PSS9	**1.5, 1.5 LX, 1.6, 2.0, 2.0 All-wheel Drive, 2.0 R, 2.0 WRX STi, 2.0 WRX Turbo, 2.2 GX, 2.4 WRX, 2.4 WRX ST1, 2.5 All-wheel Drive, 2.5 AWD** 03/01 - CH-Nr. 70 -235 kW	*48-086202*		-> CH.Nr.: XXXXXXXXX4XXXXXXX; fixing hole pitches at the front 65 mm VA: lowering (expertise): 25-45 mm HA: lowering (expertise): 25-45 mm
B16 PSS9	**1.5, 1.5 LX, 1.6, 2.0, 2.0 All-wheel Drive, 2.0 R, 2.0 WRX STi, 2.0 WRX Turbo, 2.2 GX, 2.4 WRX, 2.4 WRX ST1, 2.5 All-wheel Drive, 2.5 AWD** 03/01 - CH-Nr. 70 -235 kW	**48-103398**		-> CH.Nr.: XXXXXXXXX4XXXXXXX; fixing hole pitches at the front 65 mm; Conditions see certificates VA: lowering (expertise): 25-45 mm; axle load to: 1030 kg HA: lowering (expertise): 20-40 mm; axle load to: 920 kg
B16 PSS9	**1.5, 1.5 AWD, 1.5 LX, 1.6, 2.0, 2.0 All-wheel Drive, 2.0 AWD, 2.0 R, 2.0 WRX STi, 2.0 WRX Turbo, 2.2 GX, 2.4 WRX, 2.4 WRX ST1, 2.5 All-wheel Drive, 2.5 AWD** CH-Nr. - 70 -235 kW	**48-123525**		CH.Nr.: XXXXXXXXX5XXXXXXX ->; fixing hole pitches at the front 75 mm; Conditions see certificates VA: lowering (expertise): 20-40 mm HA: lowering (expertise): 30-40 mm
SUBARU IMPREZA Hatchback				
B14	**2.0 All-wheel Drive, 2.5 All-wheel Drive** 12/02 - CH-Nr. 92 -195 kW	**47-101791**		-> CH.Nr.: XXXXXXXXX4XXXXXXX; fixing hole pitches at the front 65 mm; Conditions see certificates VA: lowering (expertise): 25-45 mm; axle load to: 1030 kg HA: lowering (expertise): 20-40 mm; axle load to: 920 kg
B14	**2.0 All-wheel Drive, 2.5 All-wheel Drive** CH-Nr. - 12/07 92 -195 kW	**47-124226**		CH.Nr.: XXXXXXXXX5XXXXXXX ->; fixing hole pitches at the front 75 mm; Conditions see certificates VA: lowering (expertise): 25-45 mm; axle load to: 1030 kg HA: lowering (expertise): 20-40 mm; axle load to: 960 kg
B16 PSS9	**2.0 All-wheel Drive, 2.5 All-wheel Drive** 12/02 - CH-Nr. 92 -195 kW	*48-086202*		-> CH.Nr.: XXXXXXXXX4XXXXXXX; fixing hole pitches at the front 65 mm VA: lowering (expertise): 25-45 mm HA: lowering (expertise): 20-40 mm
B16 PSS9	**2.0 All-wheel Drive, 2.5 All-wheel Drive** 12/02 - CH-Nr. 92 -195 kW	**48-103398**		-> CH.Nr.: XXXXXXXXX4XXXXXXX; fixing hole pitches at the front 65 mm; Conditions see certificates VA: lowering (expertise): 25-45 mm; axle load to: 1030 kg HA: lowering (expertise): 20-40 mm; axle load to: 920 kg

S

SUBARU

SUBARU IMPREZA Hatchback

B16 PSS9	**2.0 All-wheel Drive, 2.5 All-wheel Drive** CH-Nr. - 12/07 92 -195 kW	**48-123525**	CH.Nr.: XXXXXXXXX5XXXXXXX ->; fixing hole pitches at the front 75 mm; Conditions see certificates VA: lowering (expertise): 25-45 mm; axle load to: 1030 kg HA: lowering (expertise): 20-40 mm; axle load to: 960 kg

SUBARU IMPREZA Estate (GD, GG)

B14	**1.5, 1.6, 2.0, 2.0 R, 2.0 Turbo, 2.0 WRX Turbo** 12/02 - CH-Nr. 70 -165 kW	**47-101791**	-> CH.Nr.: XXXXXXXXX4XXXXXXX; fixing hole pitches at the front 65 mm; Conditions see certificates VA: lowering (expertise): 25-45 mm; axle load to: 1030 kg HA: lowering (expertise): 20-40 mm; axle load to: 920 kg
B14	**1.5, 1.5 AWD, 1.6, 2.0, 2.0 AWD, 2.0 R, 2.0 Turbo, 2.0 WRX STi AWD, 2.0 WRX Turbo, 2.2 GX, 2.4 WRX, 2.5 AWD** CH-Nr. - 70 -221 kW	**47-124226**	CH.Nr.: XXXXXXXXX5XXXXXXX ->; fixing hole pitches at the front 75 mm; Conditions see certificates VA: lowering (expertise): 25-45 mm; axle load to: 1030 kg HA: lowering (expertise): 20-40 mm; axle load to: 960 kg
B16 PSS9	**1.5, 1.6, 2.0, 2.0 R, 2.0 Turbo, 2.0 WRX Turbo** 12/02 - CH-Nr. 70 -165 kW	*48-086202*	-> CH.Nr.: XXXXXXXXX4XXXXXXX; fixing hole pitches at the front 65 mm VA: lowering (expertise): 25-45 mm HA: lowering (expertise): 20-40 mm
B16 PSS9	**1.5, 1.6, 2.0, 2.0 R, 2.0 Turbo, 2.0 WRX Turbo, 2.2 GX** 06/01 - CH-Nr. 70 -165 kW	**48-103398**	-> CH.Nr.: XXXXXXXXX4XXXXXXX; fixing hole pitches at the front 65 mm; Conditions see certificates VA: lowering (expertise): 25-45 mm; axle load to: 1030 kg HA: lowering (expertise): 20-40 mm; axle load to: 920 kg
B16 PSS9	**1.5, 1.5 AWD, 1.6, 2.0, 2.0 AWD, 2.0 R, 2.0 Turbo, 2.0 WRX STi AWD, 2.0 WRX Turbo, 2.2 GX, 2.4 WRX, 2.5 AWD** CH-Nr. - CH-Nr. 70 -221 kW	**48-123525**	CH.Nr.: XXXXXXXXX5XXXXXXX-> XXXXXXXXX7XXX; fixing hole pitches at the front 75 mm; Conditions see certificates VA: lowering (expertise): 25-45 mm; axle load to: 1030 kg HA: lowering (expertise): 20-40 mm; axle load to: 960 kg

SUBARU IMPREZA Hatchback

B16 PSS10	**1.5 All-wheel Drive, 2.0 All-wheel Drive, 2.5 All-wheel Drive, 2.5 STI CS400** 01/08 - 79 -294 kW	**48-155830**	mark: G3; mark: STI; Conditions see certificates VA: lowering (expertise): 20-40 mm; axle load to: 1050 kg HA: lowering (expertise): 20-40 mm; axle load to: 1040 kg

SUBARU JUSTY III (G3X)

B3	**1.3, 1.5** 09/03 - 69 -73 kW	36-219742	36-219759	with standard chassis
B4	**1.3, 1.5** 09/03 - 69 -73 kW		**19-168784**	with standard chassis

SUBARU JUSTY IV

B3	**1.0** 01/07 - 51 kW	36-219766	**36-219773**	with standard chassis

SUBARU LEGACY II (BD, BG)

B4	**2.0 i 4WD, 2.2 i 4WD** 09/94 - 03/99 85 -96 kW		*22-049285*	without ride height adjustment
B4	**2.5 i 4WD** 06/96 - 03/99 110 kW	*22-048066* *22-048073*	*22-049339*	mark: Outback; without ride height adjustment
B4	**2.5 i 4WD** 06/96 - 03/99 110 kW	*22-048028* *22-048035*	*22-049315* *22-049322*	mark: ex. Outback; without ride height adjustment

SUBARU LEGACY II Estate (BD, BG)

B4	**2.0 i 4WD, 2.2 i 4WD** 02/94 - 12/98 85 -96 kW		*22-049285*	without ride height adjustment
B4	**2.5 i 4WD** 06/96 - 11/98 110 kW	*22-048028* *22-048035*	*22-049315* *22-049322*	mark: ex. Outback; without ride height adjustment
B4	**2.5 i 4WD** 06/96 - 11/98 110 kW	*22-048066* *22-048073*	*22-049339*	mark: Outback; without ride height adjustment

S

SUBARU

SUBARU LEGACY III (BE, BH)

B6 Sport	**2.0, 2.5** 10/98 - 08/03 92 -115 kW	*35-101680*	*24-101707*	without ride height adjustment; not for: Outback
B8	**2.0, 2.5** 10/98 - 08/03 92 -115 kW		*24-029513*	without ride height adjustment; not for: Outback
B14	**2.0, 2.5** 10/98 - 08/03 92 -115 kW	**47-101746**		without ride height adjustment; not for: Outback; Conditions see certificates VA: lowering (expertise): 30-50 mm; axle load to: 1040 kg HA: lowering (expertise): 30-50 mm; axle load to: 1060 kg

SUBARU LEGACY III Estate (BE, BH)

B6 Sport	**2.0, 2.5** 12/98 - 08/03 92 -115 kW	*35-101680*	*24-101707*	without ride height adjustment; not for: Outback
B8	**2.0** 12/98 - 08/03 92 kW		*24-029513*	without ride height adjustment; not for: Outback
B14	**2.0, 2.5** 12/98 - 08/03 92 -115 kW	**47-101746**		without ride height adjustment; not for: Outback; Conditions see certificates VA: lowering (expertise): 50 mm; axle load to: 1040 kg HA: lowering (expertise): 50 mm; axle load to: 1060 kg

SUBARU LEGACY IV

B4	**2.0, 2.0 D, 2.5, 3.0** 09/03 - 101 -180 kW	**22-165565** **22-165572**	**19-158686**	without ride height adjustment; equipment: BL; not for: Outback
B6 Sport	**2.0, 2.0 D, 2.5, 3.0** 09/03 - 101 -180 kW	**35-118305** **35-118312**	**24-118323**	
B8	**2.0, 2.0 D, 2.5, 3.0** 09/03 - 101 -180 kW	**35-118336** **35-118343**	**24-118354**	

SUBARU LEGACY IV Estate (B13_)

B4	**2.0, 2.0 D, 2.0 Turbo HP AWD, 2.0 Turbo R AWD, 2.5, 2.5 Turbo R, 3.0** 09/03 - 101 -180 kW	**22-165565** **22-165572**	**19-158686**	without off-road suspension; without ride height adjustment; equipment: BL; not for: Outback
B6 Sport	**2.0, 2.0 D, 2.0 Turbo HP AWD, 2.0 Turbo R AWD, 2.5, 2.5 Turbo R, 3.0** 09/03 - 101 -180 kW	**35-118305** **35-118312**	**24-118323**	without off-road suspension; mark: BP; not for: Outback
B8	**2.0, 2.0 D, 2.0 Turbo HP AWD, 2.0 Turbo R AWD, 2.5, 2.5 Turbo R, 3.0** 09/03 - 101 -180 kW	**35-118336** **35-118343**	**24-118354**	without off-road suspension; mark: BP; not for: Outback

SUZUKI

SUZUKI ALTO III (EF)

B4	**1.0, 1.3, 1.6** 09/94 - 39 -71 kW	**i.V.** **i.V.**	*19-065038*	

SUZUKI ALTO IV (FF)

B3	**1.1** 06/02 - 46 kW	**36-219780**	**36-219797**	with standard chassis

SUZUKI BALENO (EG)

B3	**1.3 i 16V, 1.6 i 16V** 07/95 - 05/02 63 -72 kW	**36-201259**	**36-219452**	with standard chassis

S

SUZUKI

SUZUKI GRAND VITARA (FT, GT)

B6 Offroad	**1.3, 1.6, 2.0, 2.0 HDI 110, 2.0 TD Intercooler, 2.5 V6 24V** 04/98 - 61 -106 kW	**35-181675**	**24-065184**	

SUZUKI IGNIS (FH)

B3	**1.3** 10/00 - 09/03 61 kW		36-219803	with standard chassis
B3	**1.3 4WD** 10/00 - 09/03 61 kW	36-219810	36-219803	with standard chassis
B4	**1.3** 10/00 - 09/03 61 kW	22-168467 22-168474	**19-168487**	with standard chassis
B4	**1.3 4WD** 10/00 - 09/03 61 kW	22-168467 22-168474	**19-168494**	with standard chassis

SUZUKI IGNIS II

B3	**1.3** 09/03 - 69 kW	36-219742	36-219759	with standard chassis
B3	**1.5** 09/03 - 73 kW	36-219742	36-219759	with standard chassis; manual transmission
B4	**1.3, 1.3 4x4, 1.3 DDiS, 1.5, 1.5 4x4** 09/03 - 51 -73 kW	i.V. i.V.	**19-168784**	with standard chassis

SUZUKI JIMNY (FJ)

B6 Offroad	**0.7, 0.7 4x4, 1.0, 1.3 4x4, 1.3 16V, 1.3 16V 4WD, 1.3 16V 4x4, 1.5 DDiS 4WD, 1.5 DDiS 4x4, 1.6 VVT** 09/98 - 39 -76 kW	**24-193382**	**24-193399**	

SUZUKI LIANA (ER)

B4	**1.3, 1.6, 1.6 4WD** 03/02 - 66 -78 kW	**22-212986** **22-212993**	**22-213686** **22-213693**	with standard chassis

SUZUKI LJ 80

B4	**0.8** 01/80 - 12/81 29 kW	**19-028774**		
B6 Offroad	**0.8** 01/80 - 12/81 29 kW	*24-003100*	**24-003209**	

SUZUKI SAMURAI (SJ)

B4	**1.0, 1.3** 11/88 - 12/90 33 -51 kW	**19-028774**	**19-028781**	
B6 Offroad	**1.0** 11/88 - 33 kW	*24-003100*	*24-004374*	
B6 Offroad	**1.3** 11/88 - 12/90 44 -51 kW	**24-012157**	**24-012164**	

SUZUKI SJ 410

B4	**1.0** 09/81 - 12/87 33 kW	**19-028774**		
B6 Offroad	**1.0** 09/81 - 12/87 33 kW	*24-003100*	*24-004374*	

SUZUKI

SUZUKI SJ 410

SUZUKI SJ 410 Cabrio

B4	**1.0** 09/81 - 12/87 33 kW	**19-028774**		
B6 Offroad	**1.0** 09/81 - 12/87 33 kW	*24-003100*	*24-004374*	

SUZUKI SJ 413

B4	**1.3** 09/84 - 12/87 44 -47 kW	**19-028774**		
B6 Offroad	**1.3** 09/84 - 12/87 44 -47 kW	*24-003100*	*24-004374*	
B6 Offroad	**1.3** 01/88 - 08/90 44 -47 kW	**24-012157**	**24-012164**	

SUZUKI SPLASH

B4	**1.0, 1.2, 1.3 CDTI** 01/08 - 48 -63 kW	**22-166722** **22-166739**	**19-156545**	

SUZUKI SX4 (GY)

B4	**1.6 VVT 4x4, 1.9 DDiS 4x4** 06/06 - 79 -88 kW	i.V. i.V.	**19-170428**	

SUZUKI SWIFT II Hatchback (EA, MA)

B3	**1.0, 1.0 i** 03/89 - 12/92 37 -39 kW	36-219384		with standard chassis
B3	**1.0, 1.0 i** 01/93 - 05/01 37 -39 kW	36-219391		with standard chassis; manual transmission
B3	**1.0, 1.0 i** 01/93 - 05/01 37 -39 kW	36-219360		with standard chassis; automatic transmission
B3	**1.0, 1.0 i, 1.3** 03/89 - 05/01 37 -50 kW	36-219407	36-219421	with standard chassis; Vehicle Production Country: Hungary
B3	**1.0, 1.0 i, 1.3** 03/89 - 12/92 37 -50 kW		36-219414	with standard chassis; Number of Doors: 3
B3	**1.0, 1.0 i, 1.3** 03/89 - 12/92 37 -50 kW		**36-200986**	with standard chassis; Number of Doors: 5
B3	**1.0, 1.0 i** 01/93 - 05/01 37 -39 kW		**36-200870**	with standard chassis
B3	**1.0 i** 03/89 - 12/91 40 kW	36-219384		with standard chassis
B3	**1.0 i** 03/89 - 12/91 40 kW		36-219414	with standard chassis; Number of Doors: 3
B3	**1.0 i** 03/89 - 12/91 40 kW		**36-200986**	with standard chassis; Number of Doors: 5
B3	**1.3** 03/89 - 12/92 50 kW	36-219384		with standard chassis; manual transmission
B3	**1.3** 01/93 - 05/01 50 kW	36-219360		with standard chassis
B3	**1.3** 01/93 - 05/01 50 kW		**36-200870**	with standard chassis; Number of Doors: 3

S

SUZUKI

SUZUKI SWIFT II Hatchback (EA, MA)

B3	**1.3** 01/93 - 05/01 50 kW		36-219438	with standard chassis; Number of Doors: 5
B3	**1.3** 03/89 - 12/91 52 kW	36-219384		with standard chassis; manual transmission
B3	**1.3** 03/89 - 12/91 52 kW		36-219414	with standard chassis; Number of Doors: 3; manual transmission
B3	**1.3** 03/89 - 12/91 52 kW		**36-200870**	with standard chassis; Number of Doors: 3; automatic transmission
B3	**1.3** 03/89 - 12/91 52 kW		**36-200986**	with standard chassis; Number of Doors: 5
B3	**1.3 GTi** 03/89 - 05/01 74 kW	36-219377	**36-200870**	with standard chassis; Number of Doors: 3

SUZUKI SWIFT II Saloon (AH, AJ)

B3	**1.3** 03/89 - CH-Nr. 50 -52 kW	36-219384	**36-200986**	-> CH.Nr.: 00107571; with standard chassis
B3	**1.3** CH-Nr. - 05/01 50 -52 kW	36-219377	**36-200986**	CH.Nr.: 00107572 ->; with standard chassis
B4	**1.3, 1.6** 01/91 - 05/01 50 -70 kW	*22-048103* *22-048110*		
B4	**1.6 i** 01/90 - 05/01 68 kW	*22-048103* *22-048110*		

SUZUKI SWIFT Convertible (SF413)

B3	**1.3** 09/91 - 10/96 50 kW	36-219360	**36-200870**	with standard chassis; manual transmission
B3	**1.3** 09/91 - 10/96 50 kW	36-219377	**36-200870**	with standard chassis; automatic transmission
B4	**1.3** 09/91 - 10/96 50 kW	*22-048103* *22-048110*		

SUZUKI SWIFT III (SG)

B4	**1.3, 1.3 DDiS, 1.5, 1.6** 02/05 - 51 -92 kW	**22-166722** **22-166739**	**19-156545**	
B6 Sport	**1.3, 1.3 DDiS, 1.5, 1.6** 02/05 - 51 -92 kW	22-222121 22-222138	24-222143	
B14	**1.3, 1.3 DDiS, 1.5, 1.6** 02/05 - 51 -92 kW	**47-167551**		Conditions see certificates VA: lowering (expertise): 10-30 mm; axle load to: 830 kg HA: lowering (expertise): 0-20 mm; axle load to: 830 kg

SUZUKI SWIFT IV

B14	**1.2, 1.3 DDiS, 1.4, 1.6** 10/10 - 55 -100 kW	47-218871		Conditions see certificates VA: lowering (expertise): 30-50 mm HA: lowering (expertise): 30-50 mm

SUZUKI VITARA (ET, TA)

B3	**1.6, 1.6 16V** 07/88 - 03/98 59 -71 kW	**36-201488**		with standard chassis; Number of Doors: 3
B3	**1.6, 1.6 16V, 2.0 TD Intercooler** 07/88 - 03/98 59 -71 kW	36-219445	**36-201242**	with standard chassis; Number of Doors: 5

S

SUZUKI				
SUZUKI VITARA (ET, TA)				
B3	**2.0 TD** 12/94 - 03/98 52 kW	36-219445		with standard chassis; Number of Doors: 3
B3	**2.0 TD, 2.0 V6 24V, 2.5 V6 24V** 12/94 - 03/98 52 -118 kW	**36-200948**	**36-201242**	with standard chassis; Number of Doors: 5
B4	**1.6, 1.6 16V** 07/88 - 03/98 59 -71 kW		**19-028798**	
B4	**2.0 16V** 12/96 - 03/98 97 kW	*22-048141*	**19-028798**	
B4	**2.0 V6 24V** 01/96 - 03/98 100 kW	*22-048141*	**19-028798**	
B4	**1.9 D, 2.0 TD, 2.0 TD Intercooler** 01/96 - 03/98 50 -64 kW	*22-048141*	**19-028798**	
B6 Offroad	**1.6, 1.6 16V, 1.9 D, 2.0 16V, 2.0 TD, 2.0 TD Intercooler, 2.0 V6 24V, 2.5 V6 24V** 07/88 - 03/98 50 -118 kW	**35-003991**	**24-015882**	
SUZUKI VITARA Cabrio (ET, TA)				
B3	**1.6, 1.6 16V, 1.6 i 16V, 1.6 i 16V 4x4** 07/88 - 59 -71 kW	**36-201488**		with standard chassis
B4	**1.6** 07/88 - 01/95 59 kW		**19-028798**	
B4	**1.6 16V** 07/90 - 12/95 71 kW		**19-028798**	
B4	**1.6 16V** 01/96 - 03/99 71 kW	*22-048141*	**19-028798**	
B4	**1.9 D, 2.0 16V** 01/95 - 03/99 50 -97 kW	*22-048141*	**19-028798**	
B6 Offroad	**1.6, 1.6 16V, 1.9 D, 2.0 16V** 07/88 - 03/99 50 -97 kW	**35-003991**	**24-015882**	
SUZUKI WAGON R+ (EM)				
B8	**1.0, 1.2, 1.2 4WD, 1.0, 1.2** 02/98 - 44 -59 kW		*24-067966*	
SUZUKI WAGON R+ (MM)				
B4	**1.3, 1.3 DDiS** 05/00 - 51 -69 kW		**19-168784**	with standard chassis; mark: RB413 : MA53
SUZUKI X-90 (EL)				
B4	**1.6 i 16V, 1.6 i 16V 4x4** 09/95 - 71 kW	*22-048141*	**19-028798**	with ABS
B6 Offroad	**1.6 i 16V, 1.6 i 16V 4x4** 09/95 - 71 kW	**35-003991**	**24-015882**	
TOFAS				
TOFAS SAHIN Saloon				
B4	**1.4 Mirafiori, 1.6 IE, 1.6 S** 01/80 - 12/03 51 -63 kW		*19-019291*	

S
T

TOFAS

TOFAS SAHIN Saloon

TOFAS DOGAN

B4	**1.6, 1.6 i.e, 1.6 IE** 01/76 - 07/02 59 -66 kW		*19-019291*	

TOYOTA

TOYOTA AURIS

B3	**1.33 Dual-VVTi, 1.4 VVTi** 03/07 - 71 -74 kW	**36-215744**	**36-215775**	with standard chassis
B3	**1.33 Dual-VVTi, 1.4 VVTi** 03/07 - 71 -74 kW		36-215782	with standard chassis; Heavy Duty Version .
B3	**1.4 D-4D, 1.6, 1.6 VVTi, 1.8, 1.8 VVTi** 10/06 - 66 -108 kW	**36-215751**	**36-215775**	with standard chassis
B3	**1.4 D-4D, 1.6, 1.6 VVTi, 1.8, 1.8 VVTi** 10/06 - 66 -108 kW	36-215768	36-215782	with standard chassis; Heavy Duty Version .
B3	**2.0 D-4D** 03/07 - 93 kW	36-215768	**36-215775**	with standard chassis
B3	**2.0 D-4D** 03/07 - 93 kW		36-215782	with standard chassis; Heavy Duty Version .
B4	**1.33 Dual-VVTi, 1.4 D-4D, 1.4 VVTi, 1.6, 1.6 VVTi, 1.8, 1.8 VVTi, 2.0 D-4D, 2.2 D** 03/07 - 66 -130 kW	**22-168337** **22-168344**	**19-168210**	with standard chassis

TOYOTA AVENSIS Liftback (_T22_)

B4	**1.6, 1.8, 1.9 D, 2.0, 2.0 D, 2.0 D-4D, 2.0 TD** 09/97 - 02/03 61 -94 kW		*22-049636*	

TOYOTA AVENSIS Station Wagon (_T22_)

B4	**1.6, 1.8, 1.9 D, 2.0, 2.0 D-4D, 2.0 TD** 09/97 - 02/03 61 -94 kW		*22-049636*	

TOYOTA AVENSIS VERSO (AC_)

B4	**2.0 D4-D, 2.0 VVT-i** 08/01 - 85 -110 kW	i.V. i.V.	**19-166452**	with standard chassis

TOYOTA AVENSIS (T25)

B4	**1.6 VVT-i, 1.8, 2.0, 2.0 D-4D, 2.2 D-4D, 2.2 D-CAT, 2.2 TD, 2.4** 04/03 - 74 -130 kW	**22-156358** **22-156365**		

TOYOTA AVENSIS Saloon (T25)

B4	**1.6 VVT-i, 1.8, 2.0, 2.0 D-4D, 2.2 D-4D, 2.2 D-CAT, 2.2 TD, 2.4** 04/03 - 74 -130 kW	**22-156358** **22-156365**		

TOYOTA AVENSIS Estate (T25)

B4	**1.6 VVT-i, 1.8, 2.0, 2.0 D-4D, 2.2 D-4D, 2.2 D-CAT, 2.2 TD, 2.4** 04/03 - 74 -130 kW	**22-156358** **22-156365**		

T

TOYOTA				
TOYOTA AVENSIS (_T22_)				
B4	**1.6, 1.8, 1.9 D, 2.0, 2.0 D, 2.0 D-4D, 2.0 TD** 09/97 - 02/03 61 -94 kW		*22-049636*	
TOYOTA AYGO (B10)				
B3	**1.0** 07/05 - 50 kW	**36-200665**	**36-200535**	with standard chassis
B3	**1.0** 07/05 - 50 kW	**36-200832**	**36-200535**	with standard chassis; Heavy Duty Version .
B3	**1.4 HDi** 07/05 - 40 kW	**36-200832**	**36-200535**	with standard chassis
B4	**1.0, 1.4 HDi** 07/05 - 40 -50 kW	**22-146809** **22-146816**	**19-147659**	
TOYOTA CAMRY (_V1_)				
B4	**2.2, 2.5, 3.0** 06/91 - 08/94 100 -138 kW		*22-049582* *22-049599*	
B4	**2.2** 08/94 - 08/96 100 kW	*22-048325* *22-048332*	*22-049582* *22-049599*	
B4	**2.5, 3.0** 08/94 - 08/96 129 -138 kW	*22-048325* *22-048332*	*22-049582* *22-049599*	
TOYOTA CAMRY Station Wagon (_V10)				
B4	**2.2, 3.0** 03/92 - 08/94 100 -138 kW		*22-049582* *22-049599*	
B4	**2.2** 08/94 - 07/96 100 kW	*22-048325* *22-048332*	*22-049582* *22-049599*	
B4	**3.0** 08/94 - 07/96 138 kW	*22-048325* *22-048332*	*22-049582* *22-049599*	
TOYOTA CAMRY (_V30)				
B4	**2.4 VVT-i, 3.0 V6** 11/01 - 01/06 112 -137 kW	**22-165978** **22-165985**	**22-165381** **22-165398**	with standard chassis
TOYOTA CARINA (TA1_)				
B4	**1.6** 10/75 - 03/78 55 -63 kW	*21-030567*	*19-019437*	
B6 Sport	**1.6** 10/75 - 03/78 55 -63 kW		**24-003193**	
TOYOTA CARINA (TA4L, TA6_L)				
B4	**1.6, 1.8, 1.8 D** 01/78 - 02/87 48 -63 kW	*21-030567*	*19-019598*	
TOYOTA CARINA Station Wagon (TA4K, TA6K)				
B4	**1.6, 1.8, 1.8 D** 04/78 - 09/83 48 -57 kW	*21-030567*	*19-019598*	
TOYOTA CARINA II (_T15_)				
B4	**1.6** 10/83 - 11/87 55 -63 kW	*21-031090*	*22-181459* *22-044587*	

T

TOYOTA				
TOYOTA CARINA II (_T15_)				
B4	**1.8 GLI, 2.0 D** 10/83 - 05/88 50 -74 kW		*22-181459* *22-044587*	
TOYOTA CARINA II (_T17_)				
B4	**1.6** 12/87 - 03/92 66 -75 kW	*21-031366*	*22-049407*	
B4	**2.0 GLI** 12/87 - 03/92 89 kW	*21-031397*	*22-049483* *22-049490*	
B4	**2.0 D** 03/88 - 06/93 54 kW	*21-031397*	*22-049407*	
TOYOTA CARINA II Saloon (_T17_)				
B4	**1.6** 12/87 - 03/92 66 -75 kW	*21-031366*	*22-049407*	
B4	**2.0 GLI** 12/87 - 03/92 89 kW	*21-031397*	*22-049483* *22-049490*	
B4	**2.0 D** 03/88 - 06/93 54 kW	*21-031397*	*22-049407*	
TOYOTA CARINA II Station Wagon (_T17_)				
B4	**1.6** 12/87 - 03/92 66 -75 kW	*21-031366*	*22-049407*	
B4	**2.0** 12/87 - 04/92 89 kW	*21-031397*	*22-049483* *22-049490*	
B4	**2.0 D** 12/87 - 01/92 54 kW	*21-031397*	*22-049407*	
TOYOTA CARINA E (_T19_)				
B4	**1.6, 1.6 16V** CH-Nr. - 01/96 73 -85 kW	*22-048318*	*22-059543* *22-059550*	CH.Nr.: SB... ->; Not for Ireland; Vehicle Production Country: Great Britain
B4	**1.6, 1.6 16V, 1.6 GLI** 01/96 - 09/97 73 -85 kW	*22-048318*		CH.Nr.: SB... ->; Vehicle Production Country: Great Britain
B4	**1.6, 1.6 16V, 1.6 GLI** CH-Nr. - 09/97 73 -85 kW	**22-048202** **22-048219**		CH.Nr.: JT... ->; without off-road suspension; Vehicle Production Country: Japan
B4	**1.6, 1.6 16V, 1.6 GLI** CH-Nr. - 09/97 73 -85 kW	**22-048202** **22-048219**	*22-049445* *22-049452*	CH.Nr.: JT... ->; with off-road suspension; Vehicle Production Country: Japan
B4	**1.6 GLI** CH-Nr. - 08/93 79 kW	**22-048202** **22-048219**		CH.Nr.: SB... ->; Not for Ireland; Vehicle Production Country: Great Britain
B4	**1.6 GLI** CH-Nr. - 08/93 79 kW	**22-048202** **22-048219**	*22-049445* *22-049452*	CH.Nr.: SB... ->; Only for Ireland; Vehicle Production Country: Great Britain
B4	**1.6 GLI** 08/93 - 01/96 79 kW	*22-048318*	*22-059543* *22-059550*	CH.Nr.: SB... ->; Not for Ireland; Vehicle Production Country: Great Britain
B4	**1.6 GLI** 08/93 - 01/96 79 kW	*22-048318*		CH.Nr.: SB... ->; Only for Ireland; Vehicle Production Country: Great Britain
B4	**1.8** CH-Nr. - 01/96 79 kW	*22-048318*		CH.Nr.: SB... ->; Only for Ireland; Vehicle Production Country: Great Britain
B4	**1.8** CH-Nr. - 01/96 79 kW	*22-048318*	*22-059543* *22-059550*	CH.Nr.: SB... ->; Not for Ireland; Vehicle Production Country: Great Britain

TOYOTA

TOYOTA CARINA E (_T19_)

B4	**1.8** 01/96 - 09/97 79 kW	*22-048318*		CH.Nr.: SB... ->; Vehicle Production Country: Great Britain
B4	**2.0 GLI, 2.0 i** CH-Nr. - 01/96 93 -98 kW	*22-048318*	*22-059543* *22-059550*	CH.Nr.: SB... ->; Not for Ireland; Vehicle Production Country: Great Britain
B4	**2.0 GLI, 2.0 i** CH-Nr. - 01/96 93 -98 kW	*22-048318*		CH.Nr.: SB... ->; Only for Ireland; Vehicle Production Country: Great Britain
B4	**2.0 GLI, 2.0 i** 01/96 - 09/97 93 -98 kW	*22-048318*		CH.Nr.: SB... ->; Vehicle Production Country: Great Britain
B4	**2.0 GLI, 2.0 i** CH-Nr. - 09/97 93 -98 kW	*21-031410*	*22-059543* *22-059550*	CH.Nr.: JT... ->; without off-road suspension; Vehicle Production Country: Japan
B4	**2.0 GLI, 2.0 i** CH-Nr. - 09/97 93 -98 kW	*21-031410*		CH.Nr.: JT... ->; with off-road suspension; Vehicle Production Country: Japan
B4	**2.0 GTi, 2.0 GTi 16V** 04/92 - 09/97 116 -129 kW		*22-059543* *22-059550*	
B4	**2.0 D** CH-Nr. - 01/96 54 kW	*22-048318*	*22-059543* *22-059550*	CH.Nr.: SB... ->; Not for Ireland; Vehicle Production Country: Great Britain
B4	**2.0 D** CH-Nr. - 01/96 54 kW	*22-048318*		CH.Nr.: SB... ->; Only for Ireland; Vehicle Production Country: Great Britain
B4	**2.0 D** 01/96 - 01/96 54 kW	*22-048318*		CH.Nr.: SB... ->; Vehicle Production Country: Great Britain
B4	**2.0 D** CH-Nr. - 01/96 54 kW	*21-031410*		CH.Nr.: JT... ->; without off-road suspension; Vehicle Production Country: Japan
B4	**2.0 D** CH-Nr. - 01/96 54 kW	*21-031410*	*22-049445* *22-049452*	CH.Nr.: JT... ->; with off-road suspension; Vehicle Production Country: Japan
B4	**2.0 TD** CH-Nr. - 09/97 61 kW	*22-048318*		CH.Nr.: SB... ->; Vehicle Production Country: Great Britain
B4	**2.0 TD** CH-Nr. - 09/97 61 kW	*21-031410*		CH.Nr.: JT... ->; without off-road suspension; Vehicle Production Country: Japan
B4	**2.0 TD** CH-Nr. - 09/97 61 kW	*21-031410*	*22-049445* *22-049452*	CH.Nr.: JT... ->; with off-road suspension; Vehicle Production Country: Japan

TOYOTA CARINA E Saloon (_T19_)

B4	**1.6, 1.6 16V** CH-Nr. - 01/96 73 -85 kW	*22-048318*	*22-059543* *22-059550*	CH.Nr.: SB... ->; Not for Ireland; Vehicle Production Country: Great Britain
B4	**1.6, 1.6 16V** CH-Nr. - 01/96 73 -85 kW	*22-048318*		CH.Nr.: SB... ->; Only for Ireland; Vehicle Production Country: Great Britain
B4	**1.6, 1.6 16V** 01/96 - 09/97 73 -85 kW	*22-048318*		CH.Nr.: SB... ->; Vehicle Production Country: Great Britain
B4	**1.6, 1.6 16V** CH-Nr. - 09/97 73 -85 kW	**22-048202** **22-048219**	*22-049445* *22-049452*	CH.Nr.: JT... ->; with off-road suspension; Vehicle Production Country: Japan
B4	**1.6, 1.6 16V** CH-Nr. - 09/97 73 -85 kW	**22-048202** **22-048219**		CH.Nr.: JT... ->; without off-road suspension; Vehicle Production Country: Japan
B4	**1.6** CH-Nr. - 08/93 79 kW	**22-048202** **22-048219**		CH.Nr.: SB... ->; Not for Ireland; Vehicle Production Country: Great Britain
B4	**1.6** CH-Nr. - 08/93 79 kW	**22-048202** **22-048219**	*22-049445* *22-049452*	CH.Nr.: SB... ->; Only for Ireland; Vehicle Production Country: Great Britain
B4	**1.6** 08/93 - 01/96 79 kW	*22-048318*	*22-059543* *22-059550*	CH.Nr.: SB... ->; Not for Ireland; Vehicle Production Country: Great Britain

T

TOYOTA

TOYOTA CARINA E Saloon (_T19_)

B4	**1.6** 08/93 - 01/96 79 kW	*22-048318*		CH.Nr.: SB... ->; Only for Ireland; Vehicle Production Country: Great Britain
B4	**1.8 i 16V** CH-Nr. - 01/96 79 kW	*22-048318*	*22-059543* *22-059550*	CH.Nr.: SB... ->; Not for Ireland; Vehicle Production Country: Great Britain
B4	**1.8 i 16V** CH-Nr. - 01/96 79 kW	*22-048318*		CH.Nr.: SB... ->; Only for Ireland; Vehicle Production Country: Great Britain
B4	**1.8 i 16V** 01/96 - 09/97 79 kW	*22-048318*		CH.Nr.: SB... ->; Vehicle Production Country: Great Britain
B4	**2.0, 2.0 i** CH-Nr. - 01/96 93 -98 kW	*22-048318*	*22-059543* *22-059550*	CH.Nr.: SB... ->; Not for Ireland; Vehicle Production Country: Great Britain
B4	**2.0, 2.0 i** CH-Nr. - 01/96 93 -98 kW	*22-048318*		CH.Nr.: SB... ->; Only for Ireland; Vehicle Production Country: Great Britain
B4	**2.0, 2.0 i** 01/96 - 09/97 93 -98 kW	*22-048318*		CH.Nr.: SB... ->; Vehicle Production Country: Great Britain
B4	**2.0, 2.0 i** CH-Nr. - 09/97 93 -98 kW	*21-031410*	*22-059543* *22-059550*	CH.Nr.: JT... ->; without off-road suspension; Vehicle Production Country: Japan
B4	**2.0, 2.0 i** CH-Nr. - 09/97 93 -98 kW	*21-031410*		CH.Nr.: JT... ->; with off-road suspension; Vehicle Production Country: Japan
B4	**2.0 D** CH-Nr. - 01/96 54 kW	*22-048318*	*22-059543* *22-059550*	CH.Nr.: SB... ->; Not for Ireland; Vehicle Production Country: Great Britain
B4	**2.0 D** CH-Nr. - 01/96 54 kW	*22-048318*		CH.Nr.: SB... ->; Only for Ireland; Vehicle Production Country: Great Britain
B4	**2.0 D** 01/96 - 01/96 54 kW	*22-048318*		CH.Nr.: SB... ->; Vehicle Production Country: Great Britain
B4	**2.0 D** CH-Nr. - 01/96 54 kW	*21-031410*		CH.Nr.: JT… ->; without off-road suspension; Vehicle Production Country: Japan
B4	**2.0 D** CH-Nr. - 01/96 54 kW	*21-031410*	*22-049445* *22-049452*	CH.Nr.: JT... ->; with off-road suspension; Vehicle Production Country: Japan
B4	**2.0 TD** CH-Nr. - 01/96 61 kW	*22-048318*	*22-059543* *22-059550*	CH.Nr.: SB... ->; Not for Ireland; Vehicle Production Country: Great Britain
B4	**2.0 TD** CH-Nr. - 01/96 61 kW	*22-048318*		CH.Nr.: SB... ->; Only for Ireland; Vehicle Production Country: Great Britain
B4	**2.0 TD** 01/96 - 09/97 61 kW	*22-048318*		CH.Nr.: SB... ->; Vehicle Production Country: Great Britain
B4	**2.0 TD** CH-Nr. - 09/97 61 kW	*21-031410*		CH.Nr.: JT... ->; without off-road suspension; Vehicle Production Country: Japan
B4	**2.0 TD** CH-Nr. - 09/97 61 kW	*21-031410*	*22-049445* *22-049452*	CH.Nr.: JT... ->; with off-road suspension; Vehicle Production Country: Japan

TOYOTA CARINA E Sportswagon (_T19_)

B4	**1.6, 1.6 GLI, 1.6 i** CH-Nr. - 09/97 73 -85 kW	*22-048318*		CH.Nr.: SB... ->; Vehicle Production Country: Great Britain
B4	**1.6, 1.6 GLI, 1.6 i** CH-Nr. - 09/97 73 -85 kW	**22-048202** **22-048219**	*22-049445* *22-049452*	CH.Nr.: JT... ->; Vehicle Production Country: Japan
B4	**1.8 i** CH-Nr. - 09/97 79 kW	*22-048318*		CH.Nr.: SB... ->; Vehicle Production Country: Great Britain
B4	**1.8 i** CH-Nr. - 09/97 79 kW	**22-048202** **22-048219**	*22-049445* *22-049452*	CH.Nr.: JT.. ->; Vehicle Production Country: Japan

T

TOYOTA				
TOYOTA CARINA E Sportswagon (_T19_)				
B4	**2.0 GLI, 2.0 i** CH-Nr. - 09/97 93 -98 kW	*22-048318*		CH.Nr.: SB... ->; Vehicle Production Country: Great Britain
B4	**2.0 GLI, 2.0 i** CH-Nr. - 09/97 93 -98 kW	*21-031410*		CH.Nr.: JT... ->; Vehicle Production Country: Japan
B4	**2.0 D, 2.0 TD** CH-Nr. - 09/97 54 -61 kW	*21-031410*	*22-049445* *22-049452*	CH.Nr.: JT… ->; Vehicle Production Country: Japan
B4	**2.0 D** CH-Nr. - 01/96 54 kW	*22-048318*		CH.Nr.: SB... ->; Vehicle Production Country: Great Britain
B4	**2.0 TD** CH-Nr. - 09/97 61 kW	*22-048318*		CH.Nr.: SB... ->; Vehicle Production Country: Great Britain
TOYOTA CELICA (TA2)				
B4	**1.6 LT, 2.0** 10/75 - 03/78 55 -63 kW	*21-030567*	*19-019437*	
B4	**1.6, 1.6 GT, 1.6 LT, 1.6 ST** 11/71 - 09/75 58 -79 kW		*19-019437*	
B4	**1.6, 1.6 GT, 1.6 LT, 1.6 ST** 10/75 - 03/78 58 -79 kW	*21-030567*	*19-019437*	
B6 Sport	**1.6, 1.6 GT, 1.6 LT, 1.6 ST, 2.0** 11/71 - 07/77 55 -79 kW		**24-003193**	
TOYOTA CELICA (TA60, RA40, RA6_)				
B4	**1.6 ST** 08/77 - 08/85 63 kW	*21-030567*	*19-019598*	rim: 13"
B4	**1.6 ST** 08/77 - 08/85 63 kW	*21-030383*	*19-019598*	rim: 14"
B4	**1.6 ST, 2.0 XT** 02/79 - 07/85 65 -66 kW	*21-030383*	*19-019598*	
B4	**2.0 GT, 2.0 XT** 02/78 - 08/85 77 -90 kW	*21-030383*		
TOYOTA CELICA Coupe (TA4C, TA60)				
B4	**1.6 GT, 1.6 LT, 1.6 ST** 04/78 - 08/83 55 -81 kW	*21-030383*		
TOYOTA CELICA Coupe (RA6)				
B4	**1.6, 2.0** 01/82 - 10/86 77 -91 kW	*21-030383* **11-101918** SP		
TOYOTA CELICA Hatchback (T16)				
B3	**2.0 GT, 2.0, 2.0 GT** 08/85 - 08/90 103 -110 kW	**36-161195**		with standard chassis
TOYOTA CELICA Coupe (_T18_)				
B4	**1.6 STI, 2.0 GTi** 10/89 - 01/94 77 -115 kW		*22-049506* *22-049513*	
B6 Sport	**2.0 Turbo 4WD** 10/89 - 01/94 150 -153 kW	**34-003527**		

T

TOYOTA				
TOYOTA CELICA Convertible (_T18_)				
B4	**2.0 GTi** 05/91 - 01/94 115 kW		*22-049506* *22-049513*	
TOYOTA CELICA (_T20_)				
B4	**1.8 i 16V** 11/93 - 11/99 85 kW	*21-031434*		VA: for bolted struts only
TOYOTA CELICA Convertible (_T20_)				
B4	**2.0 i 16V** 04/96 - 11/99 125 kW	*21-031434*		VA: for bolted struts only
TOYOTA COROLLA Hatchback (KE, TE)				
B4	**1.2** 09/76 - 01/80 40 kW		*19-020037*	
B4	**1.6** 09/76 - 01/80 54 -62 kW	*21-030383*	*19-020037*	
B6 Sport	**1.2, 1.6** 09/76 - 01/80 40 -62 kW	**34-000748**	*24-003162*	mark: KE
B6 Sport	**1.2** 09/76 - 01/80 40 kW	**34-000779**	*24-003162*	mark: TE
TOYOTA COROLLA (KE)				
B4	**1.2** 10/72 - 12/80 40 -43 kW		*19-020037*	
B6 Sport	**1.2** 10/72 - 12/80 40 -43 kW	**34-000748**	*24-003162*	
B6 Sport	**1.2** 08/74 - 12/80 40 kW		**24-003179**	mark: Rennen
TOYOTA COROLLA Combi (KE)				
B4	**1.2** 07/75 - 01/80 40 kW		*19-020037*	
B6 Sport	**1.2** 07/75 - 01/80 40 kW	**34-000748**	*24-003162*	
TOYOTA COROLLA Coupe (KE)				
B4	**1.2** 07/75 - 01/80 40 kW		*19-020037*	
B6 Sport	**1.2** 07/75 - 01/80 40 kW	**34-000748**	*24-003162*	
TOYOTA COROLLA Hatchback (_E7_)				
B4	**1.3** 09/79 - 05/83 44 -48 kW		*19-019598*	
B4	**1.6, 1.6 GT** 09/79 - 09/83 54 -81 kW	*21-030383*	*19-019598*	
B4	**1.8 D** 01/83 - 09/83 48 kW	*21-030383*	*19-019598*	
B6 Sport	**1.3** 09/79 - 05/83 44 -48 kW		**24-003193**	

T

TOYOTA				
TOYOTA COROLLA Hatchback (_E7_)				
B6 Sport	**1.6, 1.6 GT, 1.8 D** 09/79 - 09/83 48 -81 kW	**34-000984**	**24-003193**	
TOYOTA COROLLA (_E7_)				
B4	**1.3** 09/79 - 06/83 44 -48 kW		*19-019598*	
B4	**1.6** 10/82 - 09/83 55 kW	*21-030383*	*19-019598*	
B4	**1.8 D** 01/83 - 09/83 43 kW	*21-030383*	*19-019598*	
B6 Sport	**1.3** 09/79 - 06/83 44 -48 kW		**24-003193**	
B6 Sport	**1.6, 1.8 D** 10/82 - 09/83 43 -55 kW	**34-000984**	**24-003193**	
TOYOTA COROLLA Station Wagon (_E7_)				
B4	**1.3, 1.8 D** 12/79 - 08/87 44 -48 kW	*21-030383*		
TOYOTA COROLLA Liftback (_E8_)				
B3	**1.3, 1.6, 1.8 D** 06/83 - 08/87 43 -85 kW	**36-202768**	**36-202744**	with standard chassis
TOYOTA COROLLA FX Compact (E8B)				
B3	**1.3, 1.6, 1.6 GT 16V, 1.8 D** 01/85 - 05/88 43 -89 kW	**36-202768**	**36-202744**	with standard chassis
TOYOTA COROLLA (_E8_)				
B3	**1.3, 1.6, 1.8 D** 06/83 - 05/88 43 -62 kW	**36-202768**	**36-202744**	with standard chassis
TOYOTA COROLLA Coupe (AE86)				
B3	**1.5 L, 1.6 16V, 1.6 GT 16V, 1.6 GTi Twin Cam, 1.6 SR, 1.6 SR 16V** 05/83 - 07/87 57 -96 kW	**36-202768**	**36-202744**	with standard chassis
B6 Sport	**1.5 L, 1.6 16V, 1.6 GT 16V, 1.6 GTi Twin Cam, 1.6 SR, 1.6 SR 16V** 05/83 - 07/87 57 -96 kW	**34-000984**	**24-003193**	
B6 Sport	**1.5 L, 1.6 16V, 1.6 GT 16V, 1.6 GTi Twin Cam, 1.6 SR, 1.6 SR 16V** 05/83 - 07/87 57 -96 kW		**24-001540**	mark: Rennen HA: firmer setting
TOYOTA COROLLA Liftback (_E9_)				
B3	**1.3 i** 08/87 - 04/92 55 kW	**36-161638**	**36-161133**	with standard chassis
B3	**1.6, 1.6 GTI, 1.8 D** 07/87 - 06/93 47 -92 kW	**36-161614**	**36-161133**	with standard chassis
B4	**1.3, 1.3 i** 07/87 - 04/92 55 -60 kW	*21-031380*	*22-049384* *22-049391*	with off-road suspension
B4	**1.3, 1.3 i** 07/87 - 04/92 55 -60 kW	*21-031359*	*22-049384* *22-049391*	without off-road suspension

T

TOYOTA

TOYOTA COROLLA Liftback (_E9_)

B4	**1.5, 1.6** 08/87 - 04/92 52 -92 kW	*21-031359*	*22-049384* *22-049391*	without off-road suspension
B4	**1.6 GTI** 07/87 - 06/93 92 kW	*21-031373*	*22-049384* *22-049391*	
B4	**1.8 D** 08/87 - 04/92 47 -49 kW	*21-031373*	*22-049384* *22-049391*	without off-road suspension

TOYOTA COROLLA Compact (_E9_)

B3	**1.3, 1.3 i** 08/87 - 04/92 55 kW	**36-161638**	**36-161133**	with standard chassis
B3	**1.6, 1.6 GTi, 1.8 D** 08/87 - 04/92 47 -85 kW	**36-161614**	**36-161133**	with standard chassis
B4	**1.3, 1.3 i** 08/87 - 04/92 55 kW	*21-031380*	*22-049384* *22-049391*	with off-road suspension
B4	**1.3, 1.3 i** 08/87 - 04/92 55 kW	*21-031359*	*22-049384* *22-049391*	without off-road suspension
B4	**1.6, 1.6 GTi** 08/87 - 04/92 66 -85 kW	*21-031380*	*22-049384* *22-049391*	with off-road suspension
B4	**1.6, 1.6 GTi** 08/87 - 04/92 66 -85 kW	*21-031359*	*22-049384* *22-049391*	without off-road suspension
B4	**1.8 D** 08/87 - 04/92 47 -49 kW	*21-031380*	*22-049384* *22-049391*	with off-road suspension
B4	**1.8 D** 08/87 - 04/92 47 -49 kW	*21-031373*	*22-049384* *22-049391*	without off-road suspension

TOYOTA COROLLA (_E9_)

B3	**1.3, 1.3 i** 05/87 - 12/92 55 -60 kW	**36-161638**	**36-161133**	with standard chassis
B3	**1.6, 1.6 i, 1.6 XL, 1.8 D** 07/87 - 06/93 47 -145 kW	**36-161614**	**36-161133**	with standard chassis
B4	**1.3, 1.3 i, 1.5, 1.5 DX** 05/87 - 12/92 52 -92 kW	*21-031380*	*22-049384* *22-049391*	with off-road suspension
B4	**1.3, 1.3 i, 1.5, 1.5 DX** 05/87 - 12/92 52 -92 kW	*21-031359*	*22-049384* *22-049391*	without off-road suspension
B4	**1.5 4x4, 1.6 All-wheel Drive, 1.6 GL 4x4, 1.6 i 4WD** 10/87 - 04/92 66 -92 kW	*21-031380*	*19-063560*	
B4	**1.6, 1.6 i, 1.6 XL** 08/87 - 04/92 66 -145 kW	*21-031380*	*22-049384* *22-049391*	with off-road suspension
B4	**1.6, 1.6 i, 1.6 XL** 08/87 - 04/92 66 -145 kW	*21-031359*	*22-049384* *22-049391*	without off-road suspension
B4	**1.8 D** 07/87 - 06/93 47 -49 kW	*21-031380*	*22-049384* *22-049391*	with off-road suspension
B4	**1.8 D** 07/87 - 06/93 47 -49 kW	*21-031373*	*22-049384* *22-049391*	without off-road suspension

TOYOTA COROLLA Station Wagon (_E9_)

B3	**1.3, 1.3 i** 12/87 - 06/92 55 kW	**36-161638**	**36-161133**	with standard chassis

T

TOYOTA				
TOYOTA COROLLA Station Wagon (_E9_)				
B3	**1.6, 1.6 XLI, 1.8 D** 12/87 - 06/92 47 -77 kW	**36-161614**	**36-161133**	with standard chassis
B4	**1.3, 1.3 i** 12/87 - 06/92 55 kW	*21-031380*	*22-049384* *22-049391*	with off-road suspension
B4	**1.3, 1.3 i** 12/87 - 06/92 55 kW	*21-031359*	*22-049384* *22-049391*	without off-road suspension
B4	**1.6, 1.6 XLI** 02/88 - 06/92 66 -77 kW	*21-031380*	*22-049384* *22-049391*	with off-road suspension
B4	**1.6** 02/88 - 05/92 66 kW	*21-031359*	*22-049384* *22-049391*	without off-road suspension
B4	**1.8 D** 12/87 - 06/92 47 -49 kW	*21-031380*	*22-049384* *22-049391*	with off-road suspension
B4	**1.8 D** 12/87 - 06/92 47 -49 kW	*21-031373*	*22-049384* *22-049391*	without off-road suspension
TOYOTA COROLLA Compact (_E10_)				
B4	**1.3 12V** 07/92 - 05/95 53 kW	*22-048189* *22-048196* **11-101918** SP	*22-049469* *22-049476*	without off-road suspension
B4	**1.3 12V, 1.3 XLI, 1.3 XLI 16V, 1.6 Si** 07/92 - 04/97 53 -84 kW	**11-101918** SP	*22-138712* *22-138729*	with off-road suspension
B4	**1.3 XLI, 1.3 XLI 16V** 07/92 - 04/97 55 -65 kW	*22-048189* *22-048196* **11-101918** SP	*22-049469* *22-049476*	without off-road suspension
B4	**1.6 Si** 07/92 - 04/97 84 kW	*22-048189* *22-048196* **11-101918** SP	*22-049469* *22-049476*	without off-road suspension
B4	**2.0 D** 07/92 - 04/97 53 kW	**11-101918** SP	*22-049469* *22-049476*	without off-road suspension
B4	**2.0 D** 07/92 - 04/97 53 kW	**11-101918** SP	*22-138712* *22-138729*	with off-road suspension
B6 Sport	**1.6 Si** 07/92 - 04/97 84 kW	**34-030097**	**34-050217**	without ride height adjustment VA: for bolted struts only HA: for bolted struts only
TOYOTA COROLLA Liftback (_E10_)				
B4	**1.3 12V, 1.3 XLI** 07/92 - 04/97 53 -65 kW	*22-048189* *22-048196* **11-101918** SP	*22-049469* *22-049476*	without off-road suspension
B4	**1.3 12V, 1.3 XLI, 1.6 GLI** 07/92 - 04/97 53 -84 kW	**11-101918** SP	*22-138712* *22-138729*	with off-road suspension
B4	**1.6 GLI** 07/92 - 04/97 84 kW	*22-048189* *22-048196* **11-101918** SP	*22-049469* *22-049476*	without off-road suspension
B4	**2.0 D** 07/92 - 04/97 53 kW		*22-049469* *22-049476*	without off-road suspension
B4	**2.0 D** 07/92 - 04/97 53 kW	**11-101918** SP	*22-138712* *22-138729*	with off-road suspension
B6 Sport	**1.6 GLI** 07/92 - 04/97 84 kW	**34-030097**	**34-050217**	without ride height adjustment VA: for bolted struts only HA: for bolted struts only

T

TOYOTA				
TOYOTA COROLLA (_E10_)				
B4	**1.3 12V, 1.3 XLI, 1.3 XLI 16V** 07/92 - 04/97 53 -65 kW	*22-048189* *22-048196* **11-101918** SP	*22-049469* *22-049476*	without off-road suspension
B4	**1.3 12V, 1.3 XLI, 1.3 XLI 16V, 1.6, 1.6 Si** 05/92 - 04/97 53 -85 kW	**11-101918** SP	*22-138712* *22-138729*	with off-road suspension
B4	**1.6, 1.6 Si** 05/92 - 04/97 76 -85 kW	*22-048189* *22-048196* **11-101918** SP	*22-049469* *22-049476*	without off-road suspension
B4	**2.0 D** 07/92 - 04/97 53 kW	**11-101918** SP	*22-049469* *22-049476*	without off-road suspension
B4	**2.0 D** 07/92 - 04/97 53 kW	**11-101918** SP	*22-138712* *22-138729*	with off-road suspension
TOYOTA COROLLA Wagon (_E10_)				
B4	**1.3 12V, 1.3 XLI 16V** 07/92 - 09/95 53 -65 kW	*22-048189* *22-048196* **11-101918** SP	*22-049469* *22-049476*	without off-road suspension
B4	**1.3 12V, 1.3 XLI, 1.3 XLI 16V, 1.6, 1.6 Si, 1.8, 1.8 XL** 07/92 - 04/97 53 -88 kW	**11-101918** SP	*22-138712* *22-138729*	with off-road suspension
B4	**1.3 XLI** 09/95 - 04/97 55 kW	*22-048189* *22-048196* **11-101918** SP	*22-049469* *22-049476*	without off-road suspension
B4	**1.6, 1.6 Si, 1.8, 1.8 XL** 07/92 - 04/97 76 -88 kW	*22-048189* *22-048196* **11-101918** SP	*22-049469* *22-049476*	without off-road suspension
B4	**2.0 D** 07/92 - 04/97 53 kW	**11-101918** SP	*22-049469* *22-049476*	without off-road suspension
B4	**2.0 D** 07/92 - 04/97 53 kW	**11-101918** SP	*22-138712* *22-138729*	with off-road suspension
TOYOTA COROLLA Compact (_E11_)				
B3	**1.6 Aut.** 09/98 - 02/00 79 kW	**36-200443**	**36-200597**	with standard chassis
B3	**1.6** 04/97 - 08/98 81 kW	**36-200337**	**36-200597**	with standard chassis; manual transmission
B3	**1.6** 09/98 - 02/00 81 kW	**36-200344**	**36-200597**	with standard chassis; manual transmission
B3	**1.6** 09/98 - 02/00 81 kW	**36-200443**	**36-200597**	with standard chassis; automatic transmission
B4	**1.4, 1.6, 1.6 Aut.** 04/97 - 02/00 63 -81 kW	*22-048189* *22-048196*	*22-049605* *22-049612*	without off-road suspension
B4	**2.0 D** 04/97 - 02/00 53 kW	*22-048349* *22-048356*	*22-049605* *22-049612*	without off-road suspension
TOYOTA COROLLA Liftback (_E11_)				
B3	**1.4, 1.6** 04/97 - 02/00 63 -81 kW	**36-219148**	**36-200047**	with standard chassis; Vehicle Production Country: Great Britain
B3	**1.4** 04/97 - 02/00 63 kW	**36-200313**	**36-200597**	with standard chassis; manual transmission
B3	**1.6** 04/97 - 08/98 81 kW	**36-200337**	**36-200597**	with standard chassis; manual transmission

T

TOYOTA

TOYOTA COROLLA Liftback (_E11_)

B3	**1.6** 09/98 - 02/00 81 kW	**36-200344**	**36-200597**	with standard chassis; manual transmission
B3	**1.6** 09/98 - 02/00 81 kW	**36-200443**	**36-200597**	with standard chassis; automatic transmission
B4	**1.4, 1.6, 1.6 Aut.** 04/97 - 02/00 63 -81 kW	*22-048189* *22-048196*	*22-049605* *22-049612*	without off-road suspension
B4	**2.0 D** 04/97 - 02/00 53 kW	*22-048349* *22-048356*	*22-049605* *22-049612*	without off-road suspension

TOYOTA COROLLA (_E11_)

B3	**1.6 Aut.** 09/98 - 02/00 79 kW	**36-200443**	36-219308	with standard chassis
B3	**1.6** 04/97 - 08/98 81 kW	**36-200337**		with standard chassis; manual transmission
B3	**1.6** 09/98 - 02/00 81 kW	**36-200344**	36-219308	with standard chassis; manual transmission
B3	**1.6** 09/98 - 02/00 81 kW	**36-200443**	36-219308	with standard chassis; automatic transmission
B4	**1.9 D, 2.0 D, 2.0 D-4D, 2.2 TD** 04/98 - 01/02 51 -81 kW	*22-048349* *22-048356*	*22-049605* *22-049612*	without off-road suspension

TOYOTA COROLLA Wagon (__E11_)

B3	**1.4** 04/97 - 08/98 63 kW	**36-200313**	**36-200597**	with standard chassis; manual transmission
B3	**1.4** 09/98 - 02/00 63 kW	36-219841	36-218554	with standard chassis
B3	**2.0 D** 04/97 - 08/98 53 kW	36-219315	**36-200597**	with standard chassis
B3	**2.0 D** 09/98 - 02/00 53 kW	**36-200443**	36-218554	with standard chassis
B4	**1.4, 1.4 16V, 1.6, 1.6 16V, 1.6 Aut., 1.8** 04/97 - 10/01 63 -81 kW		*22-049605* *22-049612*	without off-road suspension
B4	**1.9 D, 2.0 D, 2.0 D-4D, 2.0 D4d GS** 04/97 - 01/02 51 -81 kW	*22-048349* *22-048356*	*22-049605* *22-049612*	without off-road suspension

TOYOTA COROLLA (_E12U_, _E12J_)

B3	**1.4 VVT-i, 1.6 VVT-i** 01/02 - 12/06 71 -81 kW	**36-200061**	**36-200238**	with standard chassis; manual transmission
B3	**1.6 VVT-i** 01/02 - 12/06 81 kW	**36-200207**	**36-200238**	with standard chassis; automatic transmission
B3	**1.8, 1.8 VVTL-i TS** 06/04 - 100 -165 kW	36-214556	36-214563	with standard chassis
B3	**1.8 VVTL-i TS** 01/02 - 05/04 141 kW	36-214525	36-214532	with standard chassis
B3	**1.8 VVTL-i TS** 06/04 - 141 kW	36-214556	36-214563	with standard chassis
B3	**1.4 D** 07/04 - 66 kW	**36-200207**	**36-200238**	with standard chassis

T

TOYOTA				
TOYOTA COROLLA (_E12U_, _E12J_)				
B3	**2.0 D-4D** 01/02 - 66 -85 kW	36-214570	**36-200238**	with standard chassis
B4	**1.4 D, 1.4 VVT-i, 1.6 VVT-i, 1.8, 1.8 VVTL-i TS, 2.0 D-4D, 2.2 D4d** 05/03 - 66 -165 kW	**22-111111** **22-111128**	*19-111131*	Not for Taiwan
B4	**1.4 D, 1.4 VVT-i, 1.6 VVT-i, 1.8, 1.8 VVTL-i TS, 2.0 D-4D, 2.2 D4d** 05/03 - 66 -165 kW	**22-111111** **22-111128**	**19-147024**	Only for Taiwan
B6 Sport	**1.4 D, 1.4 VVT-i, 1.6 VVT-i, 1.8, 1.8 VVTL-i TS, 2.0 D-4D, 2.2 D4d** 05/03 - 66 -165 kW	**35-053460** **35-053477**	**24-069243**	Not for Taiwan
B8	**1.4 D, 1.4 VVT-i, 1.6 VVT-i, 1.8, 1.8 VVTL-i TS, 2.0 D-4D, 2.2 D4d** 05/03 - 66 -165 kW	**35-053484** **35-053491**	**24-069250**	Not for Taiwan
B12 PK	**1.4 VVT-i, 1.6 VVT-i, 1.8, 1.8 VVTL-i TS** 01/02 - 71 -141 kW	**46-182265**		Not for Taiwan; without ride height adjustment; Conditions see certificates VA: lowering (expertise): 30 mm; axle load to: 1000 kg HA: lowering (expertise): 30 mm; axle load to: 970 kg
B12 PK	**1.4 D, 2.0 D-4D** 05/03 - 66 -85 kW	**46-182272**		Not for Taiwan; without ride height adjustment; Conditions see certificates VA: lowering (expertise): 30 mm; axle load to: 1000 kg HA: lowering (expertise): 30 mm; axle load to: 970 kg
B16 PSS9	**1.4 D, 1.4 VVT-i, 1.6 VVT-i, 1.8, 1.8 VVTL-i TS, 2.0 D-4D, 2.2 D4d** 05/03 - 66 -165 kW	**48-088756**		Not for Taiwan; Conditions see certificates VA: lowering (expertise): 25-45 mm; axle load to: 1000 kg HA: lowering (expertise): 25-45 mm; axle load to: 970 kg
TOYOTA COROLLA Estate (_E12J_, _E12T_)				
B3	**1.4 VVT-i** 01/02 - 05/04 71 kW	**36-200054**	**36-198207**	with standard chassis; manual transmission; Vehicle Production Country: Great Britain
B3	**1.4 VVT-i** 06/04 - 71 kW	**36-200672**	**36-200238**	with standard chassis; manual transmission; Vehicle Production Country: Great Britain
B3	**1.6 VVT-i** 01/02 - 06/04 81 kW	**36-200054**	**36-198207**	with standard chassis; manual transmission; Vehicle Production Country: Great Britain
B3	**1.6 VVT-i** 07/04 - 81 kW	**36-200672**	**36-200238**	with standard chassis; manual transmission; Vehicle Production Country: Great Britain
B3	**1.6 VVT-i** 07/04 - 81 kW	**36-200351**	**36-200238**	with standard chassis; automatic transmission; Vehicle Production Country: Great Britain
B3	**1.6 VVT-i** 05/04 - 81 kW	**36-200085**		with standard chassis; automatic transmission; Vehicle Production Country: Japan
B3	**1.4 D** 07/04 - 66 kW	**36-200351**	**36-200238**	with standard chassis; Vehicle Production Country: Great Britain
B3	**1.4 D** 07/04 - 66 kW	**36-200085**		with standard chassis; Vehicle Production Country: Japan
B4	**1.4 D, 1.4 VVT-i, 1.6 VVT-i, 1.8, 2.0 D-4D** 04/04 - 66 -100 kW	**22-111111** **22-111128**	*19-111131*	
B4	**1.4 D, 1.4 VVT-i, 1.6 VVT-i, 1.8, 2.0 D-4D** 04/04 - 66 -100 kW	**22-111111** **22-111128**	**19-147024**	Only for Taiwan
B6 Sport	**1.4 D, 1.4 VVT-i, 1.6 VVT-i, 1.8, 2.0 D-4D** 04/04 - 66 -100 kW	**35-053460** **35-053477**	**24-069243**	
B8	**1.4 D, 1.4 VVT-i, 1.6 VVT-i, 1.8, 2.0 D-4D** 04/04 - 66 -100 kW	**35-053484** **35-053491**	**24-069250**	

T

TOYOTA

TOYOTA COROLLA Estate (_E12J_, _E12T_)

B12 PK	**1.4 VVT-i, 1.6 VVT-i, 1.8** 01/02 - 71 -100 kW		**46-182265**	without ride height adjustment; Conditions see certificates VA: lowering (expertise): 30 mm; axle load to: 1000 kg HA: lowering (expertise): 30 mm; axle load to: 970 kg
B12 PK	**1.4 D, 2.0 D-4D** 04/04 - 66 -85 kW		**46-182272**	without ride height adjustment; Conditions see certificates VA: lowering (expertise): 30 mm; axle load to: 1000 kg HA: lowering (expertise): 30 mm; axle load to: 970 kg
B16 PSS9	**1.4 D, 1.4 VVT-i, 1.6 VVT-i, 1.8, 2.0 D-4D** 04/04 - 66 -100 kW		**48-088756**	Conditions see certificates VA: lowering (expertise): 25-45 mm; axle load to: 1000 kg HA: lowering (expertise): 25-50 mm; axle load to: 970 kg

TOYOTA COROLLA Saloon (_E12J_, _E12T_)

B3	**1.6 VVT-i** 08/02 - 06/04 81 kW	**36-200054**	**36-198207**	with standard chassis; manual transmission; Vehicle Production Country: Great Britain
B3	**1.6 VVT-i** 07/04 - 81 kW	**36-200672**	**36-200238**	with standard chassis; manual transmission; Vehicle Production Country: Great Britain
B3	**1.4 D** 07/04 - 66 kW	**36-200351**	**36-200238**	with standard chassis; Vehicle Production Country: Great Britain
B3	**1.4 D** 07/04 - 66 kW	**36-200085**		with standard chassis; Vehicle Production Country: Japan
B4	**1.4 D, 1.4 VVT-i, 1.5, 1.5 RC, 1.6, 1.6 VVT-i, 1.8, 2.0 D4d, 2.0 D-4D, 2.2 D4d** 08/02 - 66 -130 kW	**22-111111** **22-111128**	*19-111131*	
B4	**1.4 D, 1.4 VVT-i, 1.5, 1.5 RC, 1.6, 1.6 VVT-i, 1.8, 2.0 D4d, 2.0 D-4D, 2.2 D4d** 08/02 - 66 -130 kW	**22-111111** **22-111128**	**19-147024**	Only for Taiwan
B6 Sport	**1.4 D, 1.4 VVT-i, 1.5, 1.5 RC, 1.6, 1.6 VVT-i, 1.8, 2.0 D4d, 2.0 D-4D, 2.2 D4d** 08/02 - 66 -130 kW	**35-053460** **35-053477**	**24-069243**	
B8	**1.4 D, 1.4 VVT-i, 1.5, 1.5 RC, 1.6, 1.6 VVT-i, 1.8, 2.0 D4d, 2.0 D-4D, 2.2 D4d** 08/02 - 66 -130 kW	**35-053484** **35-053491**	**24-069250**	
B12 PK	**1.4 VVT-i, 1.6 VVT-i, 1.8** 11/01 - 71 -100 kW	**46-182265**		without ride height adjustment; Conditions see certificates VA: lowering (expertise): 30 mm; axle load to: 1000 kg HA: lowering (expertise): 30 mm; axle load to: 970 kg
B12 PK	**1.4 D, 2.0 D4d, 2.0 D-4D** 08/02 - 66 -85 kW	**46-182272**		without ride height adjustment; Conditions see certificates VA: lowering (expertise): 30 mm; axle load to: 1000 kg HA: lowering (expertise): 30 mm; axle load to: 970 kg
B16 PSS9	**1.4 D, 1.4 VVT-i, 1.5, 1.5 RC, 1.6, 1.6 VVT-i, 1.8, 2.0 D4d, 2.0 D-4D, 2.2 D4d** 08/02 - 66 -130 kW	**48-088756**		Conditions see certificates VA: lowering (expertise): 25-45 mm; axle load to: 1000 kg HA: lowering (expertise): 25-45 mm; axle load to: 970 kg

TOYOTA COROLLA Saloon

B4	**1.33, 1.4 D-4D, 1.6, 1.6 Dual VVTi, 1.8 VVTL-i, 2.0 D-4D, 2.0 VVTi** 01/07 - 66 -112 kW	**22-168337** **22-168344**	**19-168210**	with standard chassis

TOYOTA COROLLA Verso (_E12J_)

B3	**1.4 D4d, 1.4 VVT-i, 1.6 VVT-i, 1.8, 1.8 VVT-i** 01/02 - 66 -99 kW	**36-200375**	**36-198207**	with standard chassis
B3	**2.0 D4d, 2.0 D-4D** 01/02 - 66 -85 kW	**36-204823**	**36-198207**	with standard chassis

T

TOYOTA				
TOYOTA COROLLA Verso (_E12J_)				
B4	**1.4 VVT-i, 1.6 VVT-i, 1.8 VVT-i, 2.0 D-4D** 01/02 - 12/03 66 -99 kW	**22-111111** **22-111128**	*19-111131*	
B4	**1.4 VVT-i, 1.6 VVT-i, 1.8 VVT-i, 2.0 D-4D** 01/02 - 12/03 66 -99 kW	**22-111111** **22-111128**	**19-147024**	Only for Taiwan
B4	**1.8 VVT-i, 2.0 D-4D** 02/04 - 05/04 66 -99 kW	**22-184207** **22-184221**	*19-184180*	with standard chassis
B6 Sport	**1.4 VVT-i, 1.6 VVT-i, 1.8 VVT-i, 2.0 D-4D** 01/02 - 12/03 66 -99 kW	**35-053460** **35-053477**	**24-069243**	
B8	**1.4 VVT-i, 1.6 VVT-i, 1.8 VVT-i, 2.0 D-4D** 01/02 - 12/03 66 -99 kW	**35-053484** **35-053491**	**24-069250**	
B12 PK	**1.4 VVT-i, 1.6 VVT-i, 1.8 VVT-i** 01/02 - 12/03 71 -99 kW	**46-182265**		without ride height adjustment; Conditions see certificates VA: lowering (expertise): 30 mm; axle load to: 1000 kg HA: lowering (expertise): 30 mm; axle load to: 970 kg
B12 PK	**2.0 D-4D** 01/02 - 12/03 66 kW	**46-182272**		without ride height adjustment; Conditions see certificates VA: lowering (expertise): 30 mm; axle load to: 1000 kg HA: lowering (expertise): 30 mm; axle load to: 970 kg
B16 PSS9	**1.4 VVT-i, 1.6 VVT-i, 1.8 VVT-i, 2.0 D-4D** 01/02 - 12/03 66 -99 kW	**48-088756**		Conditions see certificates VA: lowering (expertise): 25-45 mm; axle load to: 1000 kg HA: lowering (expertise): 25-45 mm; axle load to: 970 kg
TOYOTA COROLLA Verso (ZER_, ZZE_)				
B3	**1.3 VVTi, 1.4 D4d, 1.5, 1.6, 1.8** 03/04 - 64 -95 kW	**36-200382**	**36-202676**	with standard chassis
B3	**2.0 D-4D, 2.2 D-4D** 04/04 - 85 -130 kW	**36-200689**	**36-202676**	with standard chassis
B4	**1.6, 1.8** 04/04 - 81 -95 kW	**22-184207** **22-184221**	*19-184180*	with standard chassis
TOYOTA FJ CRUISER (GSJ1_)				
B6 Offroad	**4.0 i V6** 12/10 - 200 kW	*24-187541*	*24-187558*	
B8 Offroad	**4.0 i V6** 12/10 - 200 -203 kW	*24-196499*	*33-187174*	VA: Height Adjustable
B8 Offroad	**4.0 i V6** 12/10 - 200 kW	*24-196499*	*25-177909*	VA: Height Adjustable HA: mark: Reservoir
TOYOTA HILUX Pickup (_N_)				
B6 Sport	**1.8** 08/83 - 07/88 58 kW		**24-010245**	
B6 Offroad	**2.2 4WD, 2.4 D 4WD, 2.4 i 4WD** 01/87 - 58 -84 kW	**24-014687**	**24-021289** **24-026758**	equipment: RN106, LN/RN/YN110
B6 Offroad	**2.4 D, 2.4 TD 4WD, 2.5 D-4D, 2.5 D-4D 4WD** 08/88 - 55 -75 kW	**24-014687**		
TOYOTA LAND CRUISER (_J4_)				
B6 Offroad	**3.0 D, 3.4 D, 3.6 D, 3.9, 4.0 D, 4.2** 03/69 - 04/86 59 -96 kW	**24-002486**	**24-002585**	
TOYOTA LAND CRUISER Pickup (_J4_)				
B6 Offroad	**3.4 D, 3.6 D, 3.9, 4.0 D, 4.2** 01/75 - 04/86 66 -96 kW	**24-002486**	**24-002585**	

T

TOYOTA				
TOYOTA LAND CRUISER (_J6_)				
B6 Offroad	**4.0, 4.0 Turbo-D** 10/85 - 12/89 100 -115 kW	**24-010047**	**24-011327**	
B6 Offroad	**4.0 Diesel, 4.2** 10/81 - 10/85 74 -88 kW	**24-002479**	**24-002561**	
B6 Offroad	**4.0 Diesel, 4.2** 10/81 - 01/88 74 -88 kW	**24-010047**	**24-010351**	
B6 Offroad	**4.0 Diesel, 4.2** 11/85 - 01/88 76 -88 kW	**24-002479**	**24-011327**	
TOYOTA LAND CRUISER (_J7_)				
B6 Offroad	**2.4, 2.4 D, 2.4 TD** 10/85 - 12/96 53 -84 kW	**24-010337**	**24-011877** **24-011884**	
B6 Offroad	**2.4, 2.4 TD** 01/90 - 12/96 66 -84 kW	**24-014847**	**24-014854**	mark: Prado
B6 Offroad	**3.4 D** 11/84 - 12/96 70 kW	**24-010047**	**24-010351**	
TOYOTA LAND CRUISER 80 (_J8_)				
B6 Offroad	**2.4 4x4, 3.4 D 4x4, 4.0, 4.2 D, 4.2 TD, 4.2 TD 24V, 4.5, 4.5 24V** 01/90 - 12/97 70 -215 kW	**24-014779**	**24-014786**	
TOYOTA LAND CRUISER 90 (_J9_)				
B6 Offroad	**3.4 i 24V** 04/96 - 131 kW	**24-027786**	**33-023519**	
B6 Offroad	**3.0 TD** 04/96 - 92 kW	**24-027786**	**24-027410**	
TOYOTA LAND CRUISER 100 (_J10_)				
B6 Offroad	**4.2 TD, 4.7, 4.7 V8 32V** 01/98 - 150 -175 kW	**24-027397**	**24-027403**	without electronic suspension control
TOYOTA LAND CRUISER (J12)				
B4	**3.0 D-4D, 4.0** 09/02 - 92 -183 kW	**19-158785**	**19-158778**	without electronic suspension control; equipment: KDJ 125 / GRJ 125
B6 Offroad	**2.7, 3.0 D, 4.5 D** 04/02 - 70 -151 kW	**24-104807**	**24-104814**	without electronic suspension control
B6 Offroad	**3.4** 09/02 - 08/04 136 kW	**24-104807**	**24-104814**	without electronic suspension control
B6 Offroad	**4.0** 09/02 - 08/04 179 kW	**24-104807**	**24-104814**	without electronic suspension control
B6 Offroad	**3.0 D-4D, 4.0** 09/02 - 92 -183 kW	**24-104807**	**24-104814**	without electronic suspension control
B6 Offroad	**3.0 D-4D** 01/07 - 127 kW	**24-104807**	**24-104814**	without electronic suspension control
TOYOTA LAND CRUISER (J20)				
B6 Offroad	**4.2 TD, 4.5 D V8, 4.5 D-40 V8, 4.6 V8, 4.7 V8, 4.7 V8 4x4, 5.7 V8** 11/07 - 150 -284 kW	*24-152921*	**24-152938**	with standard chassis; mark: LC 200; with coil-spring suspension

T

TOYOTA

TOYOTA LAND CRUISER 150 (J15)

B6 Offroad	**2.7 4WD, 3.0 D-4D, 4.0 V6 Dual VVTi, 4.0 V6 VVTi, 4.0 V6 VVT-i** 01/10 - 120 -207 kW	**24-173032**	**24-173049**	with standard chassis; with coil-spring suspension

TOYOTA MARK II Saloon

B6 Sport	**1.8, 2.0, 2.4 TD, 2.5, 3.0** 04/88 - 09/96 69 -206 kW	*34-003497*		mark: GX 81; mark: TEMS

TOYOTA MR 2 (_W2_)

B6 Sport	**2.0, 2.0 16V, 2.0 Turbo** 12/89 - 09/99 88 -167 kW	**19-040172** **19-040189**	**35-040194** **35-040200**	

TOYOTA PICNIC (_XM10)

B4	**2.0, 2.0 16V, 2.2 D** 08/97 - 12/01 66 -94 kW	i.V. i.V.	**19-215693**	

TOYOTA PREVIA (TCR1_, 2_)

B4	**2.4** 05/90 - 08/00 97 kW	*22-048264* *22-048271*	*19-063584*	rigid axle
B4	**2.4** 05/90 - 08/00 97 kW	*22-048264* *22-048271*	*19-063577*	with independent wheel suspension
B4	**2.4 4WD** 05/90 - 08/00 97 kW	*22-048264* *22-048271*	*19-063584*	rigid axle
B4	**2.4 4WD** 05/90 - 08/00 97 kW	*22-048264* *22-048271*	*19-063577*	with independent wheel suspension
B6 Sport	**2.4, 2.4 4WD** 05/90 - 08/00 97 kW	*34-050316*		Conditions see certificates; rigid axle
B6 Sport	**2.4, 2.4 4WD** 05/90 - 08/00 97 kW	*34-050316*	*24-018753*	Conditions see certificates; with double wishbone axle

TOYOTA PREVIA (ACR3_)

B4	**2.0 D-4D, 2.4 16V** 08/00 - 85 -115 kW	**22-169976** **22-169983**	**19-168432**	
B6 Sport	**2.4, 2.4 16V, 3.5** 08/00 - 115 -206 kW	*34-050316*		Conditions see certificates; rigid axle
B6 Sport	**2.4, 2.4 16V, 3.5** 08/00 - 115 -206 kW	*34-050316*	*24-018753*	Conditions see certificates; with double wishbone axle

TOYOTA PRIUS Hatchback

B3	**1.5** 08/03 - 07/08 57 kW	**36-200085**		with standard chassis

TOYOTA RAV 4 I (SXA1_)

B1	**2.0 16V** 06/94 - 06/00 95 kW	**12-224326**		VA: with ball bearing
B6 Sport	**2.0 16V** 06/94 - 12/97 94 -95 kW	**34-030615**	**24-021203**	
B8	**2.0 16V** 06/94 - 12/97 94 -95 kW	**34-030622**	**24-021210**	

T

TOYOTA

TOYOTA RAV 4 I Cabrio (SXA1_)

B1	**2.0 16V** 12/97 - 06/00 94 kW	**12-224326**		VA: with ball bearing

TOYOTA RAV 4 II (XA2)

B1	**1.8 VVTi, 2.0 D-4D 4WD, 2.0 VVTi 4WD, 2.4 VVTi, 2.4 VVTi 4x4** 06/00 - 85 -120 kW	**12-224326**		VA: with ball bearing
B4	**1.8 VVTi, 2.0 D-4D 4WD, 2.0 VVTi 4WD, 2.4 VVTi, 2.4 VVTi 4x4** 06/00 - 85 -120 kW	**22-151094** **22-151100**	**19-151113**	

TOYOTA RAV 4 III (ACA_, ACE_, ALA_)

B4	**2.0 VVT-i, 2.2 D-4D, 2.2 D-CAT** 03/06 - 100 -130 kW		**19-164687**	

TOYOTA STARLET (KP6_)

B3	**1.0, 1.2 S, 1.3, 1.3 S** 02/78 - 09/84 33 -48 kW	**36-161652**		with standard chassis
B6 Sport	**1.0, 1.2 S, 1.3, 1.3 S** 02/78 - 09/84 33 -48 kW	*28-214212*		

TOYOTA STARLET (_P8_)

B3	**1.0, 1.3 12V, 1.3 12V CAT** 12/89 - 03/96 40 -55 kW		**36-163250**	with standard chassis
B4	**1.0, 1.3 12V** 12/89 - 12/92 40 -55 kW	*22-048172*	**19-028750**	
B4	**1.3 12V CAT** 12/89 - 04/94 55 kW	*22-048172*	**19-028750**	
B4	**1.3 12V CAT** 05/94 - 03/96 55 kW	*22-048172*		
B4	**1.5 D** 12/89 - 04/94 40 kW	*22-048172*	**19-028750**	
B4	**1.5 D** 05/94 - 03/96 40 kW	*22-048172*		
B6 Sport	**1.3 12V CAT** 12/89 - 03/96 55 kW	**34-050194**	**24-014991**	

TOYOTA STARLET (EP91)

B3	**1.3** 04/96 - 12/97 55 kW	**36-216703**	**36-216727**	with standard chassis
B3	**1.3** 01/98 - 03/99 55 kW	**36-216710**	**36-216734**	with standard chassis
B4	**1.3** 04/96 - 03/99 55 kW	*22-048226* *22-048233*		
B6 Sport	**1.3** 04/96 - 03/99 55 kW	*34-050484*	*24-023528*	VA: for bolted struts only; Without roadworthy certificate

TOYOTA SUPRA (MA70)

B6 Sport	**3.0, 3.0 24V, 3.0 Turbo** 01/86 - 05/93 140 -175 kW	**24-011259**	**24-011266**	

T

TOYOTA

TOYOTA SUPRA (MA70)

TOYOTA SUPRA (JZA70, JZA80)

B6 Sport	**2.5 i Bi-Turbo, 3.0 i, 3.0 i Bi-Turbo** 08/90 - 08/98 168 -243 kW	**24-017923**	**24-017930**	

TOYOTA TERCEL (AL2_)

B3	**1.5 4WD** 10/82 - 01/88 50 -52 kW	**36-161591**	**36-161249**	with standard chassis

TOYOTA YARIS (_CP10)

B3	**1.0 16V, 1.3, 1.3 16V** 03/03 - 48 -64 kW	**36-199945**	**36-200153**	with standard chassis; Vehicle Production Country: France
B3	**1.0 16V, 1.3, 1.3 16V** 11/99 - 08/05 48 -64 kW	**36-200559**	**36-201235**	with standard chassis; Vehicle Production Country: Japan
B3	**1.0 16V, 1.3 16V** 04/99 - 02/03 50 -63 kW	**36-200481**	**36-200146**	with standard chassis; Vehicle Production Country: France
B3	**1.5 TS, 1.5 VVT-i TS** 03/03 - 77 -110 kW	**36-203987**	**36-200153**	with standard chassis; Vehicle Production Country: France
B3	**1.4 D-4D** 03/03 - 55 kW	**36-199990**	**36-200153**	with standard chassis; Vehicle Production Country: France
B4	**1.0 16V, 1.3, 1.3 16V, 1.4 D-4D, 1.5 VVT-i TS** 04/99 - 05/02 50 -78 kW	**22-052704**	**19-068565**	

TOYOTA YARIS (_P9_)

B3	**1.0 VVT-i, 1.3 VVT-i, 1.33 VVT-i, 1.5** 11/05 - 51 -80 kW	**36-200160**	**36-200245**	with standard chassis; Vehicle Production Country: France
B3	**1.8 VVTi, D-4D** 11/05 - 66 -98 kW	**36-200160**	**36-200245**	with standard chassis; Vehicle Production Country: France
B4	**1.0 VVT-i, 1.3 VVT-i, 1.33 VVT-i, 1.5, 1.8 VVTi, D-4D** 11/05 - 51 -98 kW	**22-167002** **22-167019**	**19-158150**	
B14	**1.0 VVT-i, 1.3 VVT-i, 1.33 VVT-i, 1.5, 1.8 VVTi, D-4D** 11/05 - 51 -98 kW	**47-188044**		mark: XP9; XP9F; Conditions see certificates VA: lowering (expertise): 45-55 mm; axle load to: 895 kg HA: lowering (expertise): 35-55 mm; axle load to: 825 kg

TOYOTA YARIS VERSO (NC/LP2_)

B3	**1.3, 1.5** 11/99 - 62 -78 kW	**36-200399**	**36-200245**	with standard chassis
B3	**1.3, 1.4 D-4D, 1.5** 11/99 - 55 -78 kW		**36-199983**	with standard chassis; drum Brake
B3	**1.4 D-4D** 12/01 - 55 kW	**36-204649**	**36-200245**	with standard chassis
B4	**1.3, 1.5** 11/99 - 62 -78 kW	*22-052698*		drum Brake
B4	**1.3, 1.5** 11/99 - 62 -78 kW	*22-052698*	*19-068572*	disc Brake

TOYOTA 4 RUNNER (_N130)

B6 Offroad	**2.4** 08/87 - 03/96 82 kW	**24-011396**	**24-011402**	

T

TOYOTA				
TOYOTA 4 RUNNER (_N130)				
B6 Offroad	**2.7 i, 3.4 i** 11/95 - 02/02 112 -136 kW	**24-014687**	**24-024518**	
B6 Offroad	**3.0 Turbo-D, 3.0 V6** 07/90 - 03/96 92 -105 kW	**24-014687**	**24-014694**	
TOYOTA 4 RUNNER				
B6 Offroad	**3.0 Turbo-D** 11/95 - 02/02 92 kW		**24-024518**	
TOYOTA HIACE II Wagon (H20)				
B4	**1.8** 03/83 - 01/84 58 kW		**19-028477**	with standard chassis
TOYOTA HIACE II Box (H20)				
B4	**1.8, 2.2 D** 03/83 - 01/84 49 -58 kW		**19-028477**	with standard chassis
TOYOTA HIACE IV Box (H100)				
B6 Sport	**2.5 D4d 4x4** 08/01 - 08/06 65 kW	*24-027267*	*24-027274*	
TOYOTA HIACE IV Box				
B6 Sport	**2.7 4WD** 04/98 - 105 kW	*24-027267*	*24-027274*	
B6 Sport	**2.4 TD 4WD** 08/95 - 66 kW	*24-027267*	*24-027274*	
B6 Sport	**2.5 D-4D 4WD** 11/01 - 75 kW	*24-027267*	*24-027274*	
TOYOTA HIACE V Box				
B6 Sport	**2.5 D4d 4x4** 09/06 - 86 kW	*24-027267*	*24-027274*	
TOYOTA LITEACE Box (M2_V)				
B4	**1.3, 1.8 D** 10/82 - 11/83 41 -42 kW		**19-028477**	with standard chassis
B4	**1.3, 1.8 D** 10/79 - 08/85 41 -42 kW		**19-028477**	with standard chassis
VAUXHALL				
VAUXHALL AGILA				
B4	**1.0 12V, 1.2 16V, 1.2 16V Twinport** 02/00 - 11/06 43 -59 kW		**19-168784**	
VAUXHALL AGILA				
B4	**1.0, 1.2, 1.3 CDTI** 01/08 - 48 -63 kW	**22-166722** **22-166739**	**19-156545**	
VAUXHALL ASTRA				
B2	**1.2** 10/79 - 08/82 40 kW	**16-031302** **11-101314** *SP*		

T

V

VAUXHALL				
VAUXHALL ASTRA				
B3	**1.2** 10/79 - 06/82 40 kW	**36-162512**	**36-162390**	with standard chassis
B3	**1.2** 10/79 - 06/82 40 kW	**36-162475**		with standard chassis; Heavy Duty Version .
B4	**1.2** 10/79 - 08/82 40 kW	**21-030413** **11-101314** *SP*	**19-019864**	
B6 Sport	**1.2** 10/79 - 08/82 40 kW	**34-001424**	**24-004862**	HA: firmer setting
B8	**1.2** 10/79 - 08/82 40 kW	**34-003114**	**24-013932**	HA: charakteristic: 107/36
MS	**1.2** 10/79 - 08/82 40 kW	**34-001462**	**24-000925**	mark: Cup VA: charakteristic: 230/30 HA: charakteristic: 160/50
MS	**1.2** 10/79 - 08/82 40 kW	**34-030721**	*24-024846*	mark: Rallye1 VA: charakteristic: 270/120 HA: charakteristic: 210/90
VAUXHALL ASTRA Hatchback				
B2	**1.2, 1.2 S, 1.3, 1.3 S, 1.6 D, 1.6 S** 09/79 - 08/86 40 -66 kW	**16-031302** **11-101314** *SP*		
B3	**1.2, 1.2 S, 1.3, 1.3 S** 09/79 - 06/82 40 -55 kW	**36-162512**	**36-162390**	with standard chassis
B3	**1.2, 1.3 S, 1.6 S** 09/79 - 06/82 40 -66 kW	**36-162499**	**36-162390**	with standard chassis; automatic transmission
B3	**1.2, 1.3 S, 1.6 S** 09/79 - 06/82 40 -66 kW	**36-162475**		with standard chassis; Heavy Duty Version .; automatic transmission
B3	**1.2 S** 02/82 - 06/82 44 kW	**36-162475**		with standard chassis; Heavy Duty Version .
B3	**1.2 S, 1.3, 1.3 S** 07/82 - 08/84 44 -55 kW		**36-162390**	with standard chassis
B3	**1.6 S** 09/81 - 06/82 66 kW		**36-162390**	with standard chassis; manual transmission
B3	**1.6 S** 09/81 - 06/82 66 kW	**36-162475**		with standard chassis; Heavy Duty Version .; manual transmission
B3	**1.6 S** 07/82 - 08/86 66 kW		**36-162390**	with standard chassis
B3	**1.6 S** 07/82 - 08/86 66 kW	**36-161454**		with standard chassis; Heavy Duty Version .
B3	**1.6 S** 07/82 - 08/86 66 kW	**36-161461**	**36-162390**	with standard chassis; automatic transmission
B3	**1.6 S** 07/82 - 08/86 66 kW	**36-161454**		with standard chassis; Heavy Duty Version .; automatic transmission
B3	**1.8 GTE** 07/82 - 08/86 85 kW	**36-161454**		with standard chassis; Heavy Duty Version .
B3	**1.6 D** 03/82 - 06/82 40 kW	**36-162475**	**36-162390**	with standard chassis
B3	**1.6 D** 07/82 - 08/86 40 kW	**36-161461**	**36-162390**	with standard chassis

V

VAUXHALL				
VAUXHALL ASTRA Hatchback				
B3	**1.6 D** 07/82 - 08/86 40 kW	**36-161454**		with standard chassis; Heavy Duty Version .
B4	**1.2, 1.2 S, 1.3, 1.3 S, 1.6 D, 1.6 S, 1.8 GTE** 09/79 - 08/86 40 -85 kW	**21-030413** **11-101314** SP	**19-019864**	
B6 Sport	**1.2, 1.2 S, 1.3, 1.3 S, 1.6 D, 1.6 S** 09/79 - 08/86 40 -66 kW	**34-001424**	**24-004862**	HA: firmer setting
B6 Sport	**1.8 GTE** 03/83 - 08/86 85 kW	**34-001424**	**24-004862**	HA: firmer setting
B8	**1.2, 1.2 S, 1.3, 1.3 S, 1.6 D, 1.6 S** 09/79 - 08/86 40 -66 kW	**34-003114**	**24-013932**	HA: charakteristic: 107/36
B8	**1.8 GTE** 03/83 - 08/86 85 kW	**34-003114**	**24-013932**	HA: charakteristic: 107/36
MS	**1.2, 1.2 S, 1.3, 1.3 S, 1.6 D, 1.6 S, 1.8 GTE** 09/79 - 08/86 40 -85 kW	**34-001462**	**24-000925**	mark: Cup VA: charakteristic: 230/30 HA: charakteristic: 160/50
MS	**1.2, 1.2 S, 1.3, 1.3 S, 1.6 D, 1.6 S, 1.8 GTE** 09/79 - 08/86 40 -85 kW	**34-030721**	*24-024846*	mark: Rallye1 VA: charakteristic: 270/120 HA: charakteristic: 210/90
VAUXHALL ASTRA Estate				
B2	**1.3, 1.3 S, 1.6 D, 1.6 S** 09/81 - 08/86 40 -66 kW	**16-031548** **11-101314** SP	**15-069115**	
B3	**1.3 S** 09/79 - 06/82 55 kW	**36-162512**	**38-133985**	with standard chassis
B3	**1.3 S** 09/79 - 06/82 55 kW	**36-162475**		with standard chassis; Heavy Duty Version .
B3	**1.3 S, 1.6 S** 09/79 - 06/82 55 -66 kW	**36-162499**	**38-133985**	with standard chassis; automatic transmission
B3	**1.3 S, 1.6 S** 09/79 - 06/82 55 -66 kW	**36-162475**		with standard chassis; Heavy Duty Version .; automatic transmission
B3	**1.6 S** 09/81 - 06/82 66 kW		**38-133985**	with standard chassis
B3	**1.6 S** 09/81 - 06/82 66 kW	**36-162475**		with standard chassis; Heavy Duty Version .
B3	**1.6 S** 07/82 - 08/86 66 kW		**38-133985**	with standard chassis
B3	**1.6 S** 07/82 - 08/86 66 kW	**36-161454**		with standard chassis; Heavy Duty Version .
B3	**1.6 S** 07/82 - 08/86 66 kW	**36-161461**	**38-133985**	with standard chassis; automatic transmission
B3	**1.3, 1.3 S** 07/82 - 08/84 51 -55 kW		**38-133985**	with standard chassis
B4	**1.6 D, 1.6 S** 09/81 - 08/84 40 -66 kW	**21-030413** **11-101314** SP	**19-019772**	
B4	**1.3, 1.3 S** 09/79 - 08/84 51 -55 kW	**21-030413** **11-101314** SP	**19-019772**	

V

VAUXHALL				
VAUXHALL ASTRA Estate				
B6 Sport	**1.3, 1.3 S, 1.6 D, 1.6 S** 09/81 - 08/86 40 -66 kW	**34-001424**		
VAUXHALL ASTRA Mk II Hatchback				
B1	**1.6 D, 1.7 D** 09/84 - 08/91 40 -42 kW	**12-116799**		VA: with ball bearing
B2	**1.2, 1.3, 1.6, 1.9** 09/84 - 08/91 40 -110 kW	**16-031302** **11-101314** SP		
B2	**1.4 i, 1.4 S** 01/90 - 08/91 44 -55 kW	**16-031302** **11-101314** SP	**15-062215**	
B2	**1.6 D, 1.6 S** 09/84 - 07/88 40 -66 kW	**16-031302** **11-101314** SP		-> CH.Nr.: J2791967; -> CH.Nr.: J5273427
B2	**1.6 D** 08/88 - 12/89 40 kW	**16-031302** **11-101314** SP	**15-062215**	CH.Nr.: J2791968 ->; CH.Nr.: J5273428 ->
B2	**1.7 D** 01/89 - 08/91 42 kW		**15-062215**	
B3	**1.2, 1.3, 1.4 i, 1.4 S** 09/84 - 08/91 40 -55 kW	**36-133963**	**38-130366**	with standard chassis; manual transmission
B3	**1.2, 1.3, 1.4 i, 1.4 S** 09/84 - 08/91 40 -55 kW	**36-130399**	**38-130366**	with standard chassis; automatic transmission
B3	**1.2, 1.3, 1.4 i, 1.4 S** 09/84 - 08/91 40 -55 kW	**36-133918**	**38-130373**	with standard chassis; Heavy Duty Version .
B3	**1.6, 1.6 D, 1.6 S** 09/84 - 08/91 40 -66 kW	**36-130399**	**38-130366**	with standard chassis; manual transmission
B3	**1.6, 1.6 D, 1.6 S** 09/84 - 08/91 40 -66 kW	**36-133970**	**38-130366**	with standard chassis; automatic transmission
B3	**1.6, 1.6 D, 1.6 S** 09/84 - 08/91 40 -66 kW	**36-164318**	**38-130373**	with standard chassis; Heavy Duty Version .
B3	**1.8 GTE, 2.0 GTE, 2.0 GTE 16V** 09/84 - 08/91 82 -115 kW	**36-161416**	**38-161438**	with standard chassis
B4	**1.2, 1.3, 1.6 S, 1.8 GTE** 09/84 - 08/91 40 -82 kW	**21-030413** **11-101314** SP	**19-019864**	
B4	**1.3, 1.6, 1.6 D, 1.6 S** 09/84 - CH-Nr. 40 -66 kW	**21-030413** **11-101314** SP	**19-019864**	-> CH.Nr.: J2791967; -> CH.Nr.: J5273427
B4	**1.3, 1.6, 1.6 D, 1.6 S** CH-Nr. - 08/91 40 -66 kW	**21-030413** **11-101314** SP	**19-019956**	CH.Nr.: J2791968 ->; CH.Nr.: J5273428 ->
B4	**1.4 i, 1.4 S, 1.7 D** 01/89 - 08/91 42 -55 kW	**21-030413** **11-101314** SP	**19-019956**	
B4	**2.0 GTE, 2.0 GTE 16V** 09/86 - 07/88 95 -115 kW	**21-030413** **11-101314** SP	**19-019864**	-> CH.Nr.: J2791967; -> CH.Nr.: J5273427
B4	**2.0 GTE, 2.0 GTE 16V** 08/88 - 08/91 95 -115 kW	**21-030413** **11-101314** SP	**19-019956**	CH.Nr.: J2791968 ->; CH.Nr.: J5273428 ->
B6 Sport	**1.2, 1.3, 1.4 i, 1.4 S, 1.6, 1.6 D, 1.6 S, 1.7 D, 1.8 GTE, 1.9, 2.0 GTE, 2.0 GTE 16V** 09/84 - 08/91 40 -115 kW	**34-001424**	**24-004862**	

V

VAUXHALL

VAUXHALL ASTRA Mk II Hatchback

B8	**1.2, 1.3, 1.4 i, 1.4 S, 1.6, 1.6 D, 1.6 S, 1.7 D, 1.8 GTE, 1.9, 2.0 GTE, 2.0 GTE 16V** 09/84 - 08/91 40 -115 kW	**34-003114**	**24-013932**	HA: charakteristic: 107/36
MS	**1.2, 1.3, 1.4 i, 1.4 S, 1.6, 1.6 D, 1.6 S, 1.7 D, 1.8 GTE, 1.9, 2.0 GTE, 2.0 GTE 16V** 09/84 - 08/91 40 -115 kW	**34-001462**	**24-000925**	mark: Cup VA: charakteristic: 230/30 HA: charakteristic: 160/50
MS	**1.2, 1.3, 1.4 i, 1.4 S, 1.6, 1.6 D, 1.6 S, 1.7 D, 1.8 GTE, 1.9, 2.0 GTE, 2.0 GTE 16V** 09/84 - 08/91 40 -115 kW	**34-030721**	*24-024846*	mark: Rallye1 VA: charakteristic: 270/120 HA: charakteristic: 210/90

VAUXHALL ASTRA Mk II Belmont

B1	**1.5 DT, 1.6 D, 1.7 D, 1.8, 1.8 i** 09/85 - 08/91 40 -85 kW	**12-116799**		VA: with ball bearing
B2	**1.3** 09/85 - 08/91 55 kW	**16-031302** **11-101314** SP		
B2	**1.4 i** 01/90 - 12/91 44 kW	**16-031302** **11-101314** SP	**15-062215**	
B2	**1.6, 1.6 D, 1.8** 09/85 - 07/88 40 -82 kW	**16-031302** **11-101314** SP		-> CH.Nr.: J2791967; -> CH.Nr.: J5273427
B2	**1.6, 1.6 D, 1.6 S, 1.8** 08/88 - 12/91 40 -82 kW	**16-031302** **11-101314** SP	**15-062215**	CH.Nr.: J2791968 ->; CH.Nr.: J5273428 ->
B2	**1.5 DT, 1.7 D** 01/87 - 12/91 42 -53 kW		**15-062215**	
B3	**1.3, 1.4 i** 09/85 - 12/91 44 -55 kW	**36-133963**	**38-130366**	with standard chassis; manual transmission
B3	**1.3, 1.4 i** 09/85 - 12/91 44 -55 kW	**36-130399**	**38-130366**	with standard chassis; automatic transmission
B3	**1.3, 1.4 i** 09/85 - 12/91 44 -55 kW	**36-133918**	**38-130373**	with standard chassis; Heavy Duty Version .
B3	**1.6, 1.6 D, 1.6 S** 09/85 - 12/91 40 -66 kW	**36-130399**	**38-130366**	with standard chassis; manual transmission
B3	**1.6, 1.6 D, 1.6 S** 09/85 - 12/91 40 -66 kW	**36-133970**	**38-130366**	with standard chassis; automatic transmission
B3	**1.6, 1.6 D, 1.6 S** 09/85 - 12/91 40 -66 kW	**36-164318**	**38-130373**	with standard chassis; Heavy Duty Version .
B3	**1.8, 1.8 i** 09/85 - 08/91 82 -85 kW	**36-133918**	**38-130373**	with standard chassis
B4	**1.3, 1.8 i** 09/85 - 08/88 55 -85 kW	**21-030413** **11-101314** SP	**19-019864**	
B4	**1.4 i, 1.5 DT, 1.7 D** 01/89 - 12/91 42 -53 kW	**21-030413** **11-101314** SP	**19-019956**	
B4	**1.6, 1.8** 09/85 - CH-Nr. 66 -82 kW	**21-030413** **11-101314** SP	**19-019864**	-> CH.Nr.: J2791967; -> CH.Nr.: J5273427
B4	**1.6, 1.8** CH-Nr. - 08/91 66 -82 kW	**21-030413** **11-101314** SP	**19-019956**	CH.Nr.: J2791968 ->; CH.Nr.: J5273428 ->
B4	**1.8 i** 08/88 - 08/91 85 kW	**21-030413** **11-101314** SP	**19-019956**	

V

VAUXHALL				
VAUXHALL ASTRA Mk II Belmont				
B6 Sport	**1.3, 1.4 i, 1.5 DT, 1.6, 1.6 D, 1.6 S, 1.7 D, 1.8, 1.8 i** 09/85 - 12/91 40 -85 kW	**34-001424**	**24-004862**	
B6 Sport	**1.3, 1.4 i, 1.5 DT, 1.6, 1.6 D, 1.6 S, 1.7 D, 1.8, 1.8 i** 09/85 - 12/91 40 -85 kW	**34-001424**		HA: firmer setting
B8	**1.3, 1.4 i, 1.5 DT, 1.6, 1.6 D, 1.6 S, 1.7 D, 1.8, 1.8 i** 09/85 - 12/91 40 -85 kW	**34-003114**	**24-013932**	HA: charakteristic: 107/36
VAUXHALL ASTRA Mk II Estate				
B1	**1.2, 1.3, 1.4 S, 1.5 DT, 1.6, 1.6 D, 1.6 S, 1.7 D, 1.8 i** 09/84 - 08/91 40 -83 kW	**12-116799**		VA: with ball bearing
B2	**1.2, 1.3, 1.4 S, 1.5 DT, 1.6, 1.6 D, 1.6 S, 1.7 D, 1.8 i** 09/84 - 08/91 40 -83 kW	**16-031548** **11-101314** *SP*	**15-069115**	
B3	**1.2, 1.3, 1.6, 1.6 D, 1.6 S** 09/84 - 09/85 40 -66 kW	**36-133963**	**38-133985**	with standard chassis
B3	**1.2, 1.3** 09/84 - 08/91 44 -55 kW	**36-162475**		with standard chassis; Heavy Duty Version .
B3	**1.2, 1.3, 1.4 S, 1.5 DT, 1.6, 1.6 D, 1.6 S, 1.7 D, 1.8 i** 09/84 - 08/91 40 -83 kW		**38-133985**	with standard chassis
B3	**1.2, 1.3, 1.6, 1.6 D, 1.6 S** 09/84 - 09/85 40 -66 kW	**36-133918**	**38-133985**	with standard chassis; Heavy Duty Version .
B3	**1.2, 1.3, 1.6, 1.6 D, 1.6 S** 09/85 - 12/89 40 -66 kW	**36-164318**	**38-130380**	with standard chassis; Heavy Duty Version .
B3	**1.4 S, 1.5 DT, 1.7 D** 01/88 - 08/91 42 -55 kW	**36-164318**	**38-130380**	with standard chassis; Heavy Duty Version .
B4	**1.2, 1.3, 1.4 S, 1.5 DT, 1.6, 1.6 D, 1.6 S, 1.7 D** 09/84 - 08/91 40 -66 kW	**21-030413** **11-101314** *SP*	**19-019772**	
B6 Sport	**1.2, 1.3, 1.4 S, 1.6 D, 1.6 S, 1.8 i** 09/84 - 08/91 40 -83 kW	**34-001424**	**24-015233**	
B6 Sport	**1.2, 1.3, 1.4 S, 1.5 DT, 1.6, 1.6 S, 1.7 D, 1.8 i** 09/84 - 08/91 42 -83 kW	**34-001424**	**24-016476**	HA: firmer setting
B8	**1.2, 1.3, 1.4 S, 1.5 DT, 1.6, 1.6 D, 1.6 S, 1.7 D, 1.8 i** 09/84 - 08/91 40 -83 kW	**34-003114**	**24-016483**	
VAUXHALL ASTRA Mk II Convertible				
B1	**2.0 i, 2.0 i CAT** 01/87 - 08/93 85 kW	**12-116799**		VA: with ball bearing
B2	**1.6 i, 1.6 i CAT** 10/87 - 08/93 55 -60 kW	**16-031548** **11-101369** *SP*	**15-062215**	
B4	**1.6 i, 1.6 i CAT, 2.0 i, 2.0 i CAT** 01/87 - 08/93 55 -85 kW	**21-030260** **11-101369** *SP*	**19-019956**	
B6 Sport	**1.6 i, 1.6 i CAT, 2.0 i, 2.0 i CAT** 01/87 - 08/93 55 -85 kW	**34-001424**	**24-004862**	

V

VAUXHALL

VAUXHALL ASTRA Mk II Convertible

B6 Sport	**1.6 i, 1.6 i CAT, 2.0 i, 2.0 i CAT** 01/87 - 08/93 55 -85 kW	**34-001424**		HA: firmer setting
B8	**1.6 i, 1.6 i CAT, 2.0 i, 2.0 i CAT** 01/87 - 08/93 55 -85 kW	**34-003114**	**24-013932**	HA: charakteristic: 107/36

VAUXHALL ASTRA Mk III

B1	**1.4 i, 1.4 i 16V, 1.6 i, 1.6 i 16V, 1.7 D, 1.7 TD, 1.8 i, 1.8 i 16V, 2.0 i, 2.0 i 16V** 03/92 - 09/98 42 -100 kW	**12-116812**		VA: with ball bearing
B2	**1.4 i, 1.4 i 16V, 1.6 i, 1.6 i 16V, 1.7 D, 1.7 TD, 1.8 i, 2.0 i** 03/92 - 09/98 42 -85 kW	**16-031548** **11-101369** SP	**15-062215**	with ABS
B3	**1.4 i, 1.4 i 16V, 1.6 i, 1.6 i 16V** 03/92 - 09/98 44 -74 kW	**36-130481**	**38-130366**	with standard chassis
B3	**1.4 i, 1.4 i 16V, 1.6 i, 1.6 i 16V, 1.7 D, 1.7 TD, 1.8 i, 1.8 i 16V, 2.0 i, 2.0 i 16V** 03/92 - 09/98 42 -100 kW	**36-130139**	**38-130465**	with standard chassis; Heavy Duty Version .
B3	**1.6 i 16V, 1.7 D, 1.7 TD, 1.8 i, 1.8 i 16V, 2.0 i, 2.0 i 16V** 03/92 - 09/98 42 -100 kW	**36-197941**	**38-161063**	with sports suspension; mark: GSI
B3	**1.7 D, 1.7 TD, 1.8 i, 1.8 i 16V, 2.0 i, 2.0 i 16V** 12/91 - 09/98 42 -100 kW	**36-130122**	**38-130366**	with standard chassis
B4	**1.4 i, 1.4 i 16V, 1.6 i, 1.6 i 16V, 1.7 D, 1.7 TD, 1.8 i, 1.8 i 16V, 2.0 i, 2.0 i 16V** 03/92 - 09/98 42 -100 kW	**21-030260** **11-101369** SP	**19-019956**	with ABS
B6 Sport	**1.4 i, 1.4 i 16V, 1.6 i, 1.6 i 16V, 1.7 D, 1.7 TD, 1.8 i, 1.8 i 16V, 2.0 i, 2.0 i 16V** 03/92 - 09/98 42 -100 kW	**34-030035**	**24-015523**	
B8	**1.4 i, 1.4 i 16V, 1.6 i, 1.6 i 16V, 1.7 D, 1.7 TD, 1.8 i, 1.8 i 16V, 2.0 i, 2.0 i 16V** 03/92 - 09/98 42 -100 kW	**34-181577**	**24-015523**	
B10	**1.4 i, 1.4 i 16V, 1.6 i, 1.6 i 16V, 1.7 D, 1.7 TD, 1.8 i, 1.8 i 16V, 2.0 i, 2.0 i 16V** 03/92 - 09/98 42 -100 kW	**46-111920**		Conditions see certificates VA: lowering (expertise): 60 mm; axle load to: 900 kg HA: lowering (expertise): 40 mm; axle load to: 800 kg
B12 PK	**1.4 i, 1.4 i 16V, 1.6 i, 1.6 i 16V, 1.7 D, 1.7 TD, 1.8 i, 1.8 i 16V, 2.0 i, 2.0 i 16V** 03/92 - 09/98 42 -100 kW	**46-188861**		Conditions see certificates VA: lowering (expertise): 30 mm; axle load to: 870 kg HA: lowering (expertise): 30 mm; axle load to: 800 kg
B12 SL	**1.4 i, 1.4 i 16V, 1.6 i, 1.6 i 16V, 1.7 D, 1.7 TD, 1.8 i, 1.8 i 16V, 2.0 i, 2.0 i 16V** 03/92 - 09/98 42 -100 kW	**46-188885**		Conditions see certificates VA: lowering (expertise): 45-50 mm; axle load to: 900 kg HA: lowering (expertise): 30 mm; axle load to: 800 kg

VAUXHALL ASTRA Mk III Hatchback

B1	**1.4 i, 1.4 i 16V, 1.4 S, 1.6 i, 1.6 i 16V, 1.7 D, 1.7 TD, 1.8 i, 1.8 i 16V, 2.0 i, 2.0 i 16V** 09/91 - 02/98 42 -110 kW	**12-116812**		VA: with ball bearing

VAUXHALL				
VAUXHALL ASTRA Mk III Hatchback				
B2	**1.4 i, 1.4 i 16V, 1.4 S, 1.6 i, 1.6 i 16V, 1.7 D, 1.7 TD, 1.8 i, 2.0 i** 09/91 - 02/98 42 -85 kW	**16-031548** **11-101369** SP	**15-062215**	
B3	**1.4 i, 1.4 i 16V, 1.4 S, 1.6 i, 1.6 i 16V, 1.7 D, 1.7 TD, 1.8 i, 1.8 i 16V, 2.0 i, 2.0 i 16V** 09/91 - 02/98 42 -110 kW	**36-130481**	**38-130366**	with standard chassis
B3	**1.4 i, 1.4 i 16V, 1.6 i, 1.6 i 16V, 1.7 D, 1.7 TD, 1.8 i, 1.8 i 16V, 2.0 i, 2.0 i 16V** 09/91 - 02/98 42 -110 kW	**36-130139**	**38-130465**	with standard chassis; Heavy Duty Version .
B3	**1.6 i 16V, 1.7 D, 1.7 TD, 1.8 i, 1.8 i 16V, 2.0 i, 2.0 i 16V** 09/91 - 02/98 42 -110 kW	**36-197941**	**38-161063**	with standard chassis; with sports suspension; mark: GSI
B4	**1.4 i, 1.4 i 16V, 1.4 S, 1.6 i, 1.6 i 16V, 1.7 D, 1.7 TD, 1.8 i, 1.8 i 16V, 2.0 i, 2.0 i 16V** 09/91 - 02/98 42 -110 kW	**21-030260** **11-101369** SP	**19-019956**	
B6 Sport	**1.4 i, 1.4 i 16V, 1.4 S, 1.6 i, 1.6 i 16V, 1.7 D, 1.7 TD, 1.8 i, 1.8 i 16V, 2.0 i, 2.0 i 16V** 09/91 - 02/98 42 -110 kW	**34-030035**	**24-015523**	
B8	**1.4 i, 1.4 i 16V, 1.4 S, 1.6 i, 1.6 i 16V, 1.7 D, 1.7 TD, 1.8 i, 1.8 i 16V, 2.0 i, 2.0 i 16V** 09/91 - 02/98 42 -110 kW	**34-181577**	**24-015523**	
B10	**1.4 i, 1.4 i 16V, 1.4 S, 1.6 i, 1.6 i 16V, 1.7 D, 1.7 TD, 1.8 i, 1.8 i 16V, 2.0 i, 2.0 i 16V** 09/91 - 02/98 42 -110 kW	**46-111920**		Conditions see certificates VA: lowering (expertise): 60 mm; axle load to: 900 kg HA: lowering (expertise): 40 mm; axle load to: 800 kg
B12 PK	**1.4 i, 1.4 i 16V, 1.4 S, 1.6 i, 1.6 i 16V, 1.7 D, 1.7 TD, 1.8 i, 1.8 i 16V, 2.0 i, 2.0 i 16V** 09/91 - 02/98 42 -110 kW	**46-188861**		Conditions see certificates VA: lowering (expertise): 30 mm; axle load to: 870 kg HA: lowering (expertise): 30 mm; axle load to: 800 kg
B12 SL	**1.4 i, 1.4 i 16V, 1.4 S, 1.6 i, 1.6 i 16V, 1.7 D, 1.7 TD, 1.8 i, 1.8 i 16V, 2.0 i, 2.0 i 16V** 09/91 - 02/98 42 -110 kW	**46-188885**		Conditions see certificates VA: lowering (expertise): 45-50 mm; axle load to: 900 kg HA: lowering (expertise): 30 mm; axle load to: 800 kg
VAUXHALL ASTRA Mk III Estate				
B1	**1.4 i, 1.4 i 16V, 1.4 S, 1.6 i, 1.6 i 16V, 1.6 Si, 1.7 D, 1.7 TD, 1.8 i, 1.8 i 16V, 2.0 i, 2.0 i 16V** 03/91 - 02/98 42 -100 kW	**12-116812**		VA: with ball bearing
B2	**1.4 i, 1.4 i 16V, 1.4 S, 1.6 i, 1.6 i 16V, 1.6 Si, 1.7 D, 1.7 TD, 1.8 i, 1.8 i 16V, 2.0 i, 2.0 i 16V** 03/91 - 02/98 42 -100 kW	**16-031548** **11-101369** SP	**15-069115**	
B3	**1.4 i, 1.4 i 16V, 1.4 S, 1.6 i, 1.6 i 16V, 1.6 Si** 03/91 - 02/98 44 -74 kW	**36-130481**	**38-130380**	with standard chassis
B3	**1.4 i, 1.4 i 16V, 1.4 S, 1.6 i, 1.6 i 16V, 1.6 Si** 03/91 - 02/98 44 -74 kW	**36-130139**		with standard chassis; Heavy Duty Version .
B3	**1.6 i 16V, 1.7 D, 1.7 TD, 1.8 i, 1.8 i 16V, 2.0 i, 2.0 i 16V** 09/91 - 02/98 42 -100 kW	**36-197941**	**38-130380**	with sports suspension; mark: GSI

V

VAUXHALL				
VAUXHALL ASTRA Mk III Estate				
B3	**1.7 D, 1.7 TD, 1.8 i, 1.8 i 16V, 2.0 i, 2.0 i 16V** 09/91 - 02/98 42 -100 kW	**36-130115**	**38-130465**	with standard chassis
B3	**1.7 D, 1.7 TD, 1.8 i, 1.8 i 16V, 2.0 i, 2.0 i 16V** 09/91 - 02/98 42 -100 kW	**36-130139**	**38-130380**	with standard chassis; Heavy Duty Version .
B4	**1.4 i, 1.4 i 16V, 1.4 S, 1.6 i, 1.6 i 16V, 1.6 Si, 1.7 D, 1.7 TD, 1.8 i, 1.8 i 16V, 2.0 i, 2.0 i 16V** 03/91 - 02/98 42 -100 kW	**21-030260** **11-101369** SP	**19-019772**	
B6 Sport	**1.4 i, 1.4 i 16V, 1.4 S, 1.6 i, 1.6 i 16V, 1.6 Si, 1.7 D, 1.7 TD, 1.8 i, 1.8 i 16V, 2.0 i, 2.0 i 16V** 03/91 - 02/98 42 -100 kW	**34-030035**	**24-016476**	HA: firmer setting
B8	**1.4 i, 1.4 i 16V, 1.4 S, 1.6 i, 1.6 i 16V, 1.6 Si, 1.7 D, 1.7 TD, 1.8 i, 1.8 i 16V, 2.0 i, 2.0 i 16V** 03/91 - 02/98 42 -100 kW	**34-181577**	**24-016483**	
B12 PK	**1.4 i, 1.4 i 16V, 1.4 S, 1.6 i, 1.6 i 16V, 1.6 Si, 1.7 D, 1.7 TD, 1.8 i, 1.8 i 16V, 2.0 i, 2.0 i 16V** 03/91 - 02/98 42 -100 kW	**46-188878**		Conditions see certificates VA: lowering (expertise): 30 mm; axle load to: 870 kg HA: lowering (expertise): 30 mm; axle load to: 860 kg
VAUXHALL ASTRA Mk III Convertible				
B1	**1.4 i, 1.4 i 16V, 1.6, 1.6 i, 1.8, 1.8 16V, 2.0 i** 03/93 - 03/01 52 -92 kW	**12-116812**		VA: with ball bearing
B2	**1.4 i, 1.4 i 16V, 1.6, 1.6 i, 1.8, 1.8 16V, 2.0 i** 03/93 - 03/01 52 -92 kW	**16-031548** **11-101369** SP	**15-062215**	
B3	**1.4 i, 1.4 i 16V, 1.6, 1.6 i** 03/93 - 03/01 52 -74 kW	**36-130481**	**38-130465**	with standard chassis
B3	**1.4 i, 1.4 i 16V, 1.6, 1.6 i** 03/93 - 03/01 52 -74 kW	**36-130139**		with standard chassis; Heavy Duty Version .
B3	**1.8, 1.8 16V, 2.0 i** 03/93 - 03/01 85 -92 kW	**36-130115**	**38-130465**	with standard chassis
B3	**1.8, 1.8 16V, 2.0 i** 03/93 - 03/01 85 -92 kW	**36-130139**		with standard chassis; Heavy Duty Version .
B3	**1.8, 1.8 16V, 2.0 i** 03/93 - 03/01 85 -92 kW	**36-197941**	**38-130465**	with sports suspension; mark: GSI
B4	**1.4 i, 1.4 i 16V, 1.6, 1.6 i, 1.8, 1.8 16V, 2.0 i** 03/93 - 03/01 52 -92 kW	**21-030260** **11-101369** SP	**19-019956**	
B6 Sport	**1.4 i, 1.4 i 16V, 1.6, 1.6 i, 1.8, 1.8 16V, 2.0 i** 03/93 - 03/01 52 -92 kW	**34-030035**	**24-015523**	
B8	**1.4 i, 1.4 i 16V, 1.6, 1.6 i, 1.8, 1.8 16V, 2.0 i** 03/93 - 03/01 52 -92 kW	**34-181577**	**24-015523**	
B12 PK	**1.4 i, 1.4 i 16V, 1.6, 1.6 i, 1.8, 1.8 16V, 2.0 i** 03/93 - 03/01 52 -92 kW	**46-188861**		Conditions see certificates VA: lowering (expertise): 30 mm; axle load to: 870 kg HA: lowering (expertise): 30 mm; axle load to: 800 kg

V

VAUXHALL

VAUXHALL ASTRA Mk IV

B1	**1.2 16V, 1.4, 1.4 16V, 1.6, 1.6 16V, 1.6 Dualfuel, 1.7 CDTI 16V, 1.7 DTI 16V, 1.7 TD, 1.8 16V, 1.8 16V Dualfuel, 2.0 16V, 2.0 DI, 2.0 DTI 16V, 2.2 16V** 02/98 - 44 -108 kW	**12-117376**		VA: Hard Version; without ball bearing
B1	**1.2 16V, 1.4, 1.4 16V, 1.6, 1.6 16V, 1.6 Dualfuel, 1.7 CDTI 16V, 1.7 DTI 16V, 1.7 TD, 1.8 16V, 1.8 16V Dualfuel, 2.0 16V, 2.0 DI, 2.0 DTI 16V, 2.2 16V** 02/98 - 44 -108 kW	**12-117390**		VA: Soft Version; without ball bearing
B3	**1.2 16V, 1.4 16V** 09/98 - 48 -66 kW	**36-133925**	**38-130199**	with standard chassis
B3	**1.2 16V, 1.4 16V** 09/98 - 48 -66 kW	**36-130146**	**36-224067**	with standard chassis; Heavy Duty Version .
B3	**1.4, 1.6, 1.6 16V, 1.6 Dualfuel** 05/98 - 44 -74 kW	**36-130146**	**38-130199**	with standard chassis
B3	**1.4, 1.6, 1.6 16V, 1.6 Dualfuel** 05/98 - 44 -74 kW	**36-130153**	**36-224067**	with standard chassis; Heavy Duty Version .
B3	**1.8 16V, 1.8 16V Dualfuel** 02/98 - 07/04 85 -92 kW	**36-130153**	**36-224067**	with standard chassis
B3	**1.8 16V, 1.8 16V Dualfuel** 02/98 - 07/04 85 -92 kW	**36-130160**		with standard chassis; Heavy Duty Version .
B3	**2.0 16V, 2.0 DI, 2.0 DTI 16V, 2.2 16V** 02/98 - 60 -108 kW	**36-130160**	**36-224067**	with standard chassis
B3	**1.7 CDTI 16V, 1.7 DTI 16V, 1.7 TD** 09/98 - 50 -59 kW	**36-154487**	**36-224067**	with standard chassis
B3	**1.7 CDTI 16V, 1.7 DTI 16V, 1.7 TD** 09/98 - 50 -59 kW	**36-130160**		with standard chassis; Heavy Duty Version .
B4	**1.2 16V, 1.4, 1.4 16V, 1.6, 1.6 16V, 1.6 Dualfuel, 1.7 CDTI 16V, 1.7 DTI 16V, 1.7 TD, 1.8 16V, 1.8 16V Dualfuel, 2.0 16V, 2.0 DI, 2.0 DTI 16V, 2.2 16V** 02/98 - 44 -108 kW	**22-053060** **22-053077** **11-101512** *SP*	**19-068756** OIO	with standard chassis
B6 Sport	**1.2 16V, 1.4, 1.4 16V, 1.6, 1.6 16V, 1.6 Dualfuel, 1.7 CDTI 16V, 1.7 DTI 16V, 1.7 TD, 1.8 16V, 1.8 16V Dualfuel, 2.0 16V, 2.0 DI, 2.0 DTI 16V, 2.2 16V** 02/98 - 44 -108 kW	**35-044338**	**24-027823** OIO	
B8	**1.2 16V, 1.4, 1.4 16V, 1.6, 1.6 16V, 1.6 Dualfuel, 1.7 CDTI 16V, 1.7 DTI 16V, 1.7 TD, 1.8 16V, 1.8 16V Dualfuel, 2.0 16V, 2.0 DI, 2.0 DTI 16V, 2.2 16V** 02/98 - 44 -108 kW	**35-044345**	**24-027830** OIO	
B12 PK	**1.2 16V, 1.4, 1.4 16V, 1.6, 1.6 16V, 1.6 Dualfuel** 05/98 - 44 -74 kW	**46-188984**		Conditions see certificates VA: lowering (expertise): 30 mm; axle load to: 845 kg HA: lowering (expertise): 30 mm; axle load to: 820 kg
B12 PK	**1.4, 1.4 16V, 1.6, 1.6 16V, 1.6 Dualfuel, 1.7 CDTI 16V, 1.7 DTI 16V, 1.7 TD, 1.8 16V, 1.8 16V Dualfuel, 2.0 16V** 02/98 - 44 -100 kW	**46-188946**		Conditions see certificates VA: lowering (expertise): 30 mm; axle load to: 935 kg HA: lowering (expertise): 30 mm; axle load to: 820 kg
B12 PK	**2.0 DI, 2.0 DTI 16V, 2.2 16V** 02/98 - 60 -108 kW	**46-188960**		Conditions see certificates VA: lowering (expertise): 30 mm; axle load to: 1035 kg HA: lowering (expertise): 30 mm; axle load to: 820 kg

V

VAUXHALL			
VAUXHALL ASTRA Mk IV			
B12 SL **1.2 16V, 1.4, 1.4 16V, 1.6, 1.6 16V, 1.6 Dualfuel, 1.8 16V, 1.8 16V Dualfuel, 2.0 16V, 2.2 16V** 02/98 - 44 -108 kW	**46-188939**		Conditions see certificates VA: lowering (expertise): 45-50 mm; axle load to: 965 kg HA: lowering (expertise): 30 mm; axle load to: 895 kg
B14 **1.2 16V, 1.4, 1.4 16V, 1.6, 1.6 16V, 1.6 Dualfuel, 1.7 CDTI 16V, 1.7 DTI 16V, 1.7 TD, 1.8 16V, 1.8 16V Dualfuel, 2.0 16V, 2.0 DI, 2.0 DTI 16V, 2.2 16V** 02/98 - 44 -108 kW	**47-087484**		Conditions see certificates VA: lowering (expertise): 40-60 mm; axle load to: 1034 kg HA: lowering (expertise): 25-45 mm; axle load to: 820 kg
VAUXHALL ASTRA Mk IV Hatchback			
B1 **1.2 16V, 1.4, 1.4 16V, 1.6, 1.6 16V, 1.6 Dualfuel, 1.7 CDTI 16V, 1.7 DTI 16V, 1.7 TD, 1.8 16V, 1.8 16V Dualfuel, 1.9, 2.0 16V, 2.0 DI, 2.0 DTI 16V, 2.0 SRI Turbo, 2.2 16V** 02/98 - 44 -141 kW	**12-117376**		VA: Hard Version; without ball bearing
B1 **1.2 16V, 1.4, 1.4 16V, 1.6, 1.6 16V, 1.6 Dualfuel, 1.7 CDTI 16V, 1.7 DTI 16V, 1.7 TD, 1.8 16V, 1.8 16V Dualfuel, 1.9, 2.0 16V, 2.0 DI, 2.0 DTI 16V, 2.0 SRI Turbo, 2.2 16V** 02/98 - 44 -141 kW	**12-117390**		VA: Soft Version; without ball bearing
B3 **1.2 16V, 1.4 16V** 02/98 - 48 -66 kW	**36-133925**	**38-130199**	with standard chassis
B3 **1.2 16V, 1.4 16V** 02/98 - 48 -66 kW	**36-130146**	**36-224067**	with standard chassis; Heavy Duty Version .
B3 **1.4, 1.6, 1.6 16V, 1.6 Dualfuel** 02/98 - 44 -74 kW	**36-130146**	**38-130199**	with standard chassis
B3 **1.4, 1.6, 1.6 16V, 1.6 Dualfuel** 02/98 - 44 -74 kW	**36-130153**	**36-224067**	with standard chassis; Heavy Duty Version .
B3 **1.8 16V, 1.8 16V Dualfuel** 02/98 - 85 -92 kW	**36-130153**	**36-224067**	with standard chassis
B3 **1.9, 2.0 16V, 2.2 16V** 02/98 - 100 -118 kW	**36-130160**	**36-224067**	with standard chassis
B3 **1.7 CDTI 16V, 1.7 DTI 16V, 1.7 TD** 02/98 - 50 -59 kW	**36-154487**	**36-224067**	with standard chassis
B3 **1.7 CDTI 16V, 1.8 16V, 1.8 16V Dualfuel** 09/02 - 59 -92 kW	**36-130160**		with standard chassis; Heavy Duty Version .
B3 **2.0 DI, 2.0 DTI 16V** 02/98 - 60 -74 kW	**36-130160**	**36-224067**	with standard chassis
B4 **1.2 16V, 1.4, 1.4 16V, 1.6, 1.6 16V, 1.6 Dualfuel, 1.7 CDTI 16V, 1.7 DTI 16V, 1.7 TD, 1.8 16V, 1.8 16V Dualfuel, 1.9, 2.0 16V, 2.0 DI, 2.0 DTI 16V, 2.2 16V** 02/98 - 44 -118 kW	**22-053060** **22-053077** **11-101512** SP	**19-068756** OIO	with standard chassis
B6 Sport **1.2 16V, 1.4, 1.4 16V, 1.6, 1.6 16V, 1.6 Dualfuel, 1.7 CDTI 16V, 1.7 DTI 16V, 1.7 TD, 1.8 16V, 1.8 16V Dualfuel, 1.9, 2.0 16V, 2.0 DI, 2.0 DTI 16V, 2.0 SRI Turbo, 2.2 16V** 02/98 - 44 -141 kW	**35-044338**	**24-027823** OIO	

VAUXHALL

VAUXHALL ASTRA Mk IV Hatchback

B8	**1.2 16V, 1.4, 1.4 16V, 1.6, 1.6 16V, 1.6 Dualfuel, 1.7 CDTI 16V, 1.7 DTI 16V, 1.7 TD, 1.8 16V, 1.8 16V Dualfuel, 1.9, 2.0 16V, 2.0 DI, 2.0 DTI 16V, 2.0 SRI Turbo, 2.2 16V** 02/98 - 44 -141 kW	**35-044345**	**24-027830**	
B12 PK	**1.2 16V, 1.4, 1.4 16V, 1.6, 1.6 16V, 1.6 Dualfuel** 02/98 - 44 -74 kW	**46-188984**		Conditions see certificates VA: lowering (expertise): 30 mm; axle load to: 845 kg HA: lowering (expertise): 30 mm; axle load to: 820 kg
B12 PK	**1.4, 1.4 16V, 1.6, 1.6 16V, 1.6 Dualfuel, 1.7 CDTI 16V, 1.7 DTI 16V, 1.7 TD, 1.8 16V, 1.8 16V Dualfuel, 1.9, 2.0 16V** 02/98 - 44 -118 kW	**46-188946**		Conditions see certificates VA: lowering (expertise): 30 mm; axle load to: 935 kg HA: lowering (expertise): 30 mm; axle load to: 820 kg
B12 PK	**1.7 CDTI 16V, 1.7 DTI 16V, 1.7 TD, 1.8 16V, 1.8 16V Dualfuel, 1.9, 2.0 16V, 2.0 DI, 2.0 DTI 16V, 2.0 SRI Turbo, 2.2 16V** 03/01 - 50 -141 kW	**46-188960**		Conditions see certificates VA: lowering (expertise): 30 mm; axle load to: 1035 kg HA: lowering (expertise): 30 mm; axle load to: 820 kg
B12 SL	**1.2 16V, 1.4, 1.4 16V, 1.6, 1.6 16V, 1.6 Dualfuel, 1.7 CDTI 16V, 1.7 DTI 16V, 1.7 TD, 1.8 16V, 1.8 16V Dualfuel, 1.9, 2.0 16V, 2.0 DI, 2.0 DTI 16V, 2.0 SRI Turbo, 2.2 16V** 02/98 - 44 -141 kW	**46-188939**		Conditions see certificates VA: lowering (expertise): 45-50 mm; axle load to: 965 kg HA: lowering (expertise): 30 mm; axle load to: 895 kg
B14	**1.2 16V, 1.4, 1.4 16V, 1.6, 1.6 16V, 1.6 Dualfuel, 1.7 CDTI 16V, 1.7 DTI 16V, 1.7 TD, 1.8 16V, 1.8 16V Dualfuel, 1.9, 2.0 16V, 2.0 DI, 2.0 DTI 16V, 2.0 SRI Turbo, 2.2 16V** 02/98 - 44 -141 kW	**47-087484**		Conditions see certificates VA: lowering (expertise): 40-60 mm; axle load to: 1034 kg HA: lowering (expertise): 25-45 mm; axle load to: 820 kg

VAUXHALL ASTRA Mk IV Estate

B1	**1.2 16V, 1.4 16V, 1.6, 1.6 16V, 1.7 CDTI 16V, 1.7 DTI 16V, 1.7 TD, 1.8 16V, 2.0 16V, 2.0 DI, 2.0 DTI 16V, 2.2 16V** 02/98 - 48 -108 kW	**12-117376**		VA: Hard Version; without ball bearing
B1	**1.2 16V, 1.4 16V, 1.6, 1.6 16V, 1.7 CDTI 16V, 1.7 DTI 16V, 1.7 TD, 1.8 16V, 2.0 16V, 2.0 DI, 2.0 DTI 16V, 2.2 16V** 02/98 - 48 -108 kW	**12-117390**		VA: Soft Version; without ball bearing
B3	**1.2 16V, 1.4 16V** 02/98 - 48 -66 kW	**36-133925**	**38-130236**	with standard chassis
B3	**1.2 16V, 1.4 16V** 02/98 - 48 -66 kW	**36-130146**	**38-130243**	with standard chassis; Heavy Duty Version .
B3	**1.6, 1.6 16V** 03/98 - 04/04 55 -74 kW	**36-130146**	**38-130236**	with standard chassis
B3	**1.6, 1.6 16V** 03/98 - 04/04 55 -74 kW	**36-130153**	**38-130243**	with standard chassis; Heavy Duty Version .
B3	**1.8 16V** 02/98 - 85 -92 kW	**36-130153**	**38-130243**	with standard chassis
B3	**1.8 16V** 02/98 - 85 -92 kW	**36-130160**		with standard chassis; Heavy Duty Version .
B3	**2.0 16V, 2.0 DI, 2.0 DTI 16V, 2.2 16V** 02/98 - 60 -108 kW	**36-130160**	**38-130243**	with standard chassis
B3	**1.7 CDTI 16V, 1.7 DTI 16V, 1.7 TD** 02/98 - 50 -59 kW	**36-154487**	**38-130243**	with standard chassis

V

VAUXHALL

VAUXHALL ASTRA Mk IV Estate

B3	**1.7 CDTI 16V, 1.7 DTI 16V, 1.7 TD** 02/98 - 50 -59 kW	**36-130160**		with standard chassis; Heavy Duty Version .
B4	**1.2 16V, 1.4 16V, 1.6, 1.6 16V, 1.6 Dualfuel, 1.7 CDTI 16V, 1.7 DTI 16V, 1.7 TD, 1.8 16V, 1.8 16V Dualfuel, 2.0 16V, 2.0 DI, 2.0 DTI 16V, 2.2 16V** 02/98 - 48 -108 kW	**22-053060** **22-053077** **11-101512** SP	**19-068763** OIO	with standard chassis; without ride height adjustment
B6 Sport	**1.2 16V, 1.4 16V, 1.6, 1.6 16V, 1.6 Dualfuel, 1.7 CDTI 16V, 1.7 DTI 16V, 1.7 TD, 1.8 16V, 1.8 16V Dualfuel, 2.0 16V, 2.0 DI, 2.0 DTI 16V, 2.2 16V** 02/98 - 48 -108 kW	**35-044338**	**24-027847** OIO	
B8	**1.2 16V, 1.4 16V, 1.6, 1.6 16V, 1.6 Dualfuel, 1.7 CDTI 16V, 1.7 DTI 16V, 1.7 TD, 1.8 16V, 1.8 16V Dualfuel, 2.0 16V, 2.0 DI, 2.0 DTI 16V, 2.2 16V** 02/98 - 48 -108 kW	**35-044345**	**24-027823** OIO	
B12 PK	**1.2 16V, 1.4 16V, 1.6, 1.6 16V** 02/98 - 04/04 48 -74 kW	**46-188991**		without ride height adjustment; Conditions see certificates VA: lowering (expertise): 30 mm; axle load to: 845 kg HA: lowering (expertise): 30 mm; axle load to: 885 kg
B12 PK	**1.4 16V, 1.6, 1.6 16V, 1.7 DTI 16V, 1.8 16V, 2.0 16V** 02/98 - 55 -100 kW	**46-188953**		without ride height adjustment; Conditions see certificates VA: lowering (expertise): 30 mm; axle load to: 935 kg HA: lowering (expertise): 30 mm; axle load to: 885 kg
B12 PK	**1.7 CDTI 16V, 1.7 DTI 16V, 1.7 TD, 1.8 16V, 2.0 16V, 2.0 DI, 2.0 DTI 16V, 2.2 16V** 03/01 - 50 -108 kW	**46-188977**		without ride height adjustment; Conditions see certificates VA: lowering (expertise): 30 mm; axle load to: 1035 kg HA: lowering (expertise): 30 mm; axle load to: 885 kg

VAUXHALL ASTRA Mk IV Coupe

B1	**1.8 16V, 1.8 16V Dualfuel, 1.9, 2.0 16V Turbo, 2.2 16V** 03/00 - 85 -147 kW	**12-117376**		VA: Hard Version; without ball bearing
B1	**1.8 16V, 1.8 16V Dualfuel, 1.9, 2.0 16V Turbo, 2.2 16V** 03/00 - 85 -147 kW	**12-117390**		VA: Soft Version; without ball bearing
B3	**1.8 16V** 03/00 - 85 -92 kW	**36-130153**	**36-224067**	with standard chassis
B3	**1.8 16V** 03/00 - 85 -92 kW	**36-130160**		with standard chassis; Heavy Duty Version .
B3	**1.9, 2.0 16V Turbo, 2.2 16V** 03/00 - 108 -147 kW	**36-130160**	**36-224067**	with standard chassis
B4	**1.8 16V, 1.8 16V Dualfuel, 1.9, 2.0 16V Turbo, 2.2 16V** 03/00 - 85 -147 kW	**22-053060** **22-053077** **11-101512** SP	**19-068756** OIO	
B6 Sport	**1.8 16V, 1.8 16V Dualfuel, 1.9, 2.0 16V Turbo, 2.2 16V** 03/00 - 85 -147 kW	**35-044338**	**24-027823** OIO	
B8	**1.8 16V, 1.8 16V Dualfuel, 1.9, 2.0 16V Turbo, 2.2 16V** 03/00 - 85 -147 kW	**35-044345**	**24-027830** OIO	
B12 PK	**1.8 16V, 1.9, 2.0 16V Turbo** 03/00 - 85 -147 kW	**46-188892**		Conditions see certificates VA: lowering (expertise): 30 mm; axle load to: 1015 kg HA: lowering (expertise): 30 mm; axle load to: 780 kg

VAUXHALL ASTRA MK IV Convertible

B1	**1.6 16V, 1.8 16V, 1.9, 2.0 Turbo, 2.2 16V** 03/01 - 74 -147 kW	**12-117376**		VA: Hard Version; without ball bearing

VAUXHALL				
VAUXHALL ASTRA MK IV Convertible				
B1	**1.6 16V, 1.8 16V, 1.9, 2.0 Turbo, 2.2 16V** 03/01 - 74 -147 kW	**12-117390**		VA: Soft Version; without ball bearing
B3	**1.6 16V** 03/01 - 74 kW	**36-130146**	**38-130243**	with standard chassis
B3	**1.6 16V** 03/01 - 74 kW	**36-130153**		with standard chassis; Heavy Duty Version .
B3	**1.8 16V** 03/01 - 92 kW	**36-130153**	**38-130243**	with standard chassis
B3	**1.8 16V** 03/01 - 92 kW	**36-130160**		with standard chassis; Heavy Duty Version .
B3	**1.9, 2.0 Turbo, 2.2 16V** 03/01 - 108 -147 kW	**36-130160**	**38-130243**	with standard chassis
B4	**1.6 16V, 1.8 16V, 1.9, 2.0 Turbo, 2.2 16V** 03/01 - 74 -147 kW	**22-053060** **22-053077** **11-101512** SP	**19-068756** OIO	
B6 Sport	**1.6 16V, 1.8 16V, 1.9, 2.0 Turbo, 2.2 16V** 03/01 - 74 -147 kW	**35-044338**	**24-027823** OIO	
B8	**1.6 16V, 1.8 16V, 1.9, 2.0 Turbo, 2.2 16V** 03/01 - 74 -147 kW	**35-044345**	**24-027830** OIO	
B12 PK	**1.6 16V, 1.8 16V, 1.9, 2.0 Turbo** 03/01 - 74 -147 kW	**46-188908**		Conditions see certificates VA: lowering (expertise): 30 mm; axle load to: 1015 kg HA: lowering (expertise): 30 mm; axle load to: 845 kg
VAUXHALL ASTRA MK V Sport Hatch				
B1	**1.4 16V, 1.6, 1.6 i 16V, 1.8** 02/05 - 66 -132 kW	**12-224449**		VA: with ball bearing
B1	**1.3 CDTi, 1.7 CDTi, 1.7 CDTI 16V, 1.9 CDTi, 2.0 Turbo** 02/05 - 66 -125 kW	**12-224449**		VA: with ball bearing; without lowered chassis
B1	**1.3 CDTi, 1.7 CDTi, 1.7 CDTI 16V, 1.9 CDTi, 2.0 Turbo** 02/05 - 66 -125 kW	**12-224456**		VA: with ball bearing; with lowered chassis
B3	**1.4 16V, 1.6, 1.6 i 16V** 02/05 - 66 -132 kW	**37-163570**	**38-163531**	with standard chassis
B3	**1.4 16V, 1.6, 1.6 i 16V** 02/05 - 66 -132 kW	**37-163563**	**38-163524**	with standard chassis; Heavy Duty Version .
B3	**1.8** 02/05 - 92 -103 kW	**37-163563**	**38-163531**	with standard chassis
B3	**1.8** 02/05 - 92 -103 kW	**37-163549**	**38-163524**	with standard chassis; Heavy Duty Version .
B3	**1.3 CDTi, 1.7 CDTi, 1.7 CDTI 16V** 02/05 - 66 -81 kW	**37-163549**	**38-163531**	with standard chassis
B3	**1.3 CDTi, 1.7 CDTi, 1.7 CDTI 16V** 02/05 - 66 -81 kW	**37-163556**	**38-163524**	with standard chassis; Heavy Duty Version .
B3	**1.9 CDTi, 2.0 Turbo, VXRacing Edition** 02/05 - 74 -176 kW	**37-163556**	**38-163531**	with standard chassis
B3	**1.9 CDTi, 2.0 Turbo, VXRacing Edition** 02/05 - 74 -176 kW		**38-163524**	with standard chassis; Heavy Duty Version .

V

VAUXHALL

VAUXHALL ASTRA MK V Sport Hatch

B4	**1.3 CDTi, 1.4 16V, 1.6, 1.6 i 16V, 1.7 CDTi, 1.7 CDTI 16V, 1.8, 1.9 CDTi, 2.0 Turbo** 02/05 - 66 -132 kW	**22-141590** **22-141606** i.V. SP	**19-141619**	without IDS+ suspension
B6 Sport	**1.3 CDTi, 1.4 16V, 1.6, 1.6 i 16V, 1.7 CDTi, 1.7 CDTI 16V, 1.8, 1.9 CDTi, 2.0 Turbo** 02/05 - 66 -132 kW	**35-114635** **35-114642**	**24-114653**	without IDS+ suspension
B8	**1.3 CDTi, 1.4 16V, 1.6, 1.6 i 16V, 1.7 CDTi, 1.7 CDTI 16V, 1.8, 1.9 CDTi, 2.0 Turbo, VXRacing Edition** 02/05 - 66 -176 kW	**35-114666** **35-114673**	**24-114684**	without IDS+ suspension
B12 PK	**1.4 16V, 1.6, 1.6 i 16V, 1.8** 02/05 - 66 -132 kW	**46-182128**		disconect ITS+; Conditions see certificates VA: lowering (expertise): 30 mm; axle load to: 970 kg HA: without ride height adjustment; lowering (expertise): 30 mm; axle load to: 860 kg
B12 PK	**1.3 CDTi, 1.7 CDTi, 1.7 CDTI 16V, 1.9 CDTi, 2.0 Turbo** 02/05 - 66 -125 kW	**46-182135**		disconect ITS+; Conditions see certificates VA: lowering (expertise): 30 mm; axle load to: 1075 kg HA: without ride height adjustment; lowering (expertise): 30 mm; axle load to: 860 kg
B12 SL	**1.4 16V, 1.6, 1.6 i 16V, 1.8** 02/05 - 66 -132 kW	**46-182166**		disconect ITS+; Conditions see certificates VA: lowering (expertise): 45-50 mm; axle load to: 960 kg HA: without ride height adjustment; lowering (expertise): 30 mm; axle load to: 860 kg
B12 SL	**1.3 CDTi, 1.7 CDTi, 1.7 CDTI 16V, 2.0 Turbo** 02/05 - 66 -125 kW	**46-182173**		disconect ITS+; Conditions see certificates VA: lowering (expertise): 45-50 mm; axle load to: 1025 kg HA: without ride height adjustment; lowering (expertise): 30 mm; axle load to: 860 kg
B14	**1.3 CDTi, 1.4 16V, 1.6, 1.6 i 16V, 1.7 CDTi, 1.7 CDTI 16V, 1.8, 1.9 CDTi, 2.0 Turbo, VXRacing Edition** 02/05 - 66 -176 kW	**47-121133**		disconect ITS+; Conditions see certificates VA: lowering (expertise): 30-50 mm; axle load to: 1060 kg HA: lowering (expertise): 30-50 mm; axle load to: 860 kg

VAUXHALL ASTRA MK V Hatchback

B1	**1.4, 1.6, 1.8** 01/04 - 05/09 66 -103 kW	**12-224449**		VA: with ball bearing
B1	**1.3 CDTI, 1.7 CDTI, 1.7 TD, 1.9 CDTI, 1.9 CDTI 16V, 2.0 Turbo** 01/04 - 05/09 59 -177 kW	**12-224449**		VA: with ball bearing; without lowered chassis
B1	**1.3 CDTI, 1.7 CDTI, 1.7 TD, 1.9 CDTI, 1.9 CDTI 16V, 2.0 Turbo** 01/04 - 05/09 59 -177 kW	**12-224456**		VA: with ball bearing; with lowered chassis
B3	**1.4, 1.6** 01/04 - 05/09 66 -85 kW	**37-163570**	**38-163531**	with standard chassis
B3	**1.4, 1.6** 01/04 - 05/09 66 -85 kW	**37-163563**	**38-163524**	with standard chassis; Heavy Duty Version .
B3	**1.8** 01/04 - 05/09 92 -103 kW	**37-163563**	**38-163531**	with standard chassis
B3	**1.8** 01/04 - 05/09 92 -103 kW	**37-163549**	**38-163524**	with standard chassis; Heavy Duty Version .
B3	**1.3 CDTI, 1.7 CDTI, 1.7 TD** 01/04 - 05/09 59 -81 kW	**37-163549**	**38-163531**	with standard chassis
B3	**1.3 CDTI, 1.7 CDTI, 1.7 TD** 01/04 - 05/09 59 -81 kW	**37-163556**	**38-163524**	with standard chassis; Heavy Duty Version .
B3	**1.9 CDTI, 1.9 CDTI 16V, 2.0 Turbo** 01/04 - 05/09 88 -177 kW	**37-163556**	**38-163531**	with standard chassis

VAUXHALL				
VAUXHALL ASTRA MK V Hatchback				
B3	**1.9 CDTI, 1.9 CDTI 16V, 2.0 Turbo** 01/04 - 05/09 88 -177 kW		**38-163524**	with standard chassis; Heavy Duty Version .
B4	**1.3 CDTI, 1.4, 1.6, 1.7 CDTI, 1.7 TD, 1.8, 1.9 CDTI, 1.9 CDTI 16V, 2.0 Turbo** 01/04 - 05/09 59 -177 kW	**22-141590** **22-141606** i.V. SP	**19-141619** OIO	without IDS+ suspension
B6 Sport	**1.3 CDTI, 1.4, 1.6, 1.7 CDTI, 1.7 TD, 1.8, 1.9 CDTI, 1.9 CDTI 16V, 2.0 Turbo** 01/04 - 05/09 59 -177 kW	**35-114635** **35-114642**	**24-114653** OIO	without IDS+ suspension
B8	**1.3 CDTI, 1.4, 1.6, 1.7 CDTI, 1.7 TD, 1.8, 1.9 CDTI, 1.9 CDTI 16V, 2.0 Turbo** 01/04 - 05/09 59 -177 kW	**35-114666** **35-114673**	**24-114684** OIO	without IDS+ suspension
B12 PK	**1.4, 1.6, 1.8** 01/04 - 05/09 66 -103 kW	**46-182128**		disconect ITS+; Conditions see certificates VA: lowering (expertise): 30 mm; axle load to: 970 kg HA: without ride height adjustment; lowering (expertise): 30 mm; axle load to: 860 kg
B12 PK	**1.3 CDTI, 1.7 CDTI, 1.7 TD, 1.9 CDTI, 1.9 CDTI 16V, 2.0 Turbo** 01/04 - 05/09 59 -177 kW	**46-182135**		disconect ITS+; Conditions see certificates VA: lowering (expertise): 30 mm; axle load to: 1075 kg HA: without ride height adjustment; lowering (expertise): 30 mm; axle load to: 860 kg
B12 SL	**1.3 CDTI, 1.4, 1.6, 1.7 CDTI, 1.7 TD, 1.8, 2.0 Turbo** 01/04 - 05/09 59 -177 kW	**46-182166**		disconect ITS+; Conditions see certificates VA: lowering (expertise): 45-50 mm; axle load to: 960 kg HA: without ride height adjustment; lowering (expertise): 30 mm; axle load to: 860 kg
B14	**1.3 CDTI, 1.4, 1.6, 1.7 CDTI, 1.7 TD, 1.8, 1.9 CDTI, 1.9 CDTI 16V, 2.0 Turbo** 01/04 - 05/09 59 -177 kW	**47-121133**		disconect ITS+; Conditions see certificates VA: lowering (expertise): 30-50 mm HA: lowering (expertise): 30-50 mm
VAUXHALL ASTRA MK V Estate				
B1	**1.4, 1.6, 1.8** 01/04 - 03/09 66 -132 kW	**12-224449**		VA: with ball bearing
B1	**1.3 CDTI, 1.7 CDTI, 1.7 TD, 1.9 CDTi, 1.9 CDTI 16V, 2.0 Turbo** 08/04 - 66 -147 kW	**12-224449**		VA: with ball bearing; without lowered chassis
B1	**1.3 CDTI, 1.7 CDTI, 1.7 TD, 1.9 CDTi, 1.9 CDTI 16V, 2.0 Turbo** 08/04 - 66 -147 kW	**12-224456**		VA: with ball bearing; with lowered chassis
B3	**1.4, 1.6** 08/04 - 03/09 66 -85 kW	**37-163570**	**38-162374**	with standard chassis
B3	**1.4, 1.6** 08/04 - 03/09 66 -85 kW	**37-163563**	**38-162350**	with standard chassis; Heavy Duty Version .
B3	**1.4, 1.6** 08/04 - 03/09 66 -85 kW		**38-162367**	with standard chassis; with ride height adjustment
B3	**1.6** 08/04 - 03/09 132 kW	**37-163563**	**38-162374**	with standard chassis
B3	**1.6** 08/04 - 03/09 132 kW	**37-163556**	**38-162350**	with standard chassis; Heavy Duty Version .
B3	**1.6** 08/04 - 03/09 132 kW		**38-162367**	with standard chassis; with ride height adjustment
B3	**1.8** 01/04 - 03/09 92 -103 kW	**37-163563**	**38-162374**	with standard chassis
B3	**1.8** 01/04 - 03/09 92 -103 kW	**37-163549**	**38-162350**	with standard chassis; Heavy Duty Version .
B3	**1.8** 01/04 - 03/09 92 -103 kW		**38-162367**	with standard chassis; with ride height adjustment

V

VAUXHALL				
VAUXHALL ASTRA MK V Estate				
B3	**1.3 CDTI, 1.7 CDTI, 1.7 TD** 08/04 - 03/09 66 -81 kW	**37-163549**	**38-162374**	with standard chassis
B3	**1.3 CDTI, 1.7 CDTI, 1.7 TD** 08/04 - 03/09 66 -81 kW	**37-163556**	**38-162350**	with standard chassis; Heavy Duty Version .
B3	**1.3 CDTI, 1.7 CDTI, 1.7 TD** 08/04 - 03/09 66 -81 kW		**38-162367**	with standard chassis; with ride height adjustment
B3	**1.9 CDTi, 1.9 CDTI 16V, 2.0 Turbo** 08/04 - 74 -147 kW	**37-163556**	**38-162374**	with standard chassis
B3	**1.9 CDTi, 1.9 CDTI 16V, 2.0 Turbo** 08/04 - 74 -147 kW		**38-162350**	with standard chassis; Heavy Duty Version .
B3	**1.9 CDTi, 1.9 CDTI 16V, 2.0 Turbo** 08/04 - 74 -147 kW		**38-162367**	with standard chassis; with ride height adjustment
B4	**1.3 CDTI, 1.4, 1.6, 1.7 CDTI, 1.7 TD, 1.8, 1.9 CDTi, 1.9 CDTI 16V, 2.0 Turbo** 01/04 - 66 -147 kW	**22-141590** **22-141606** i.V. SP	**19-141626**	without IDS+ suspension
B6 Sport	**1.3 CDTI, 1.4, 1.6, 1.7 CDTI, 1.7 TD, 1.8, 1.9 CDTi, 1.9 CDTI 16V, 2.0 Turbo** 01/04 - 66 -147 kW	**35-114635** **35-114642**	**24-118576**	without IDS+ suspension
B8	**1.3 CDTI, 1.4, 1.6, 1.7 CDTI, 1.7 TD, 1.8, 1.9 CDTi, 1.9 CDTI 16V, 2.0 Turbo** 01/04 - 66 -147 kW	**35-114666** **35-114673**	**24-118576**	without IDS+ suspension
B12 PK	**1.4, 1.6, 1.8** 01/04 - 03/09 66 -132 kW	**46-182142**		disconect ITS+; Conditions see certificates VA: lowering (expertise): 30-35 mm; axle load to: 970 kg HA: without ride height adjustment; lowering (expertise): 25-30 mm; axle load to: 940 kg
B12 PK	**1.3 CDTI, 1.7 CDTI, 1.7 TD, 1.9 CDTi, 1.9 CDTI 16V, 2.0 Turbo** 08/04 - 66 -147 kW	**46-182159**		disconect ITS+; Conditions see certificates VA: lowering (expertise): 30-35 mm; axle load to: 1075 kg HA: without ride height adjustment; lowering (expertise): 25-30 mm; axle load to: 940 kg
B12 SL	**1.3 CDTI, 1.4, 1.6, 1.7 CDTI, 1.7 TD, 1.8, 2.0 Turbo** 01/04 - 66 -147 kW	**46-182197**		disconect ITS+; Conditions see certificates VA: lowering (expertise): 40-45 mm; axle load to: 1025 kg HA: without ride height adjustment; lowering (expertise): 35 mm; axle load to: 940 kg
VAUXHALL ASTRA TwinTop				
B4	**1.6, 1.8, 1.9 CDTi 16v, 2.0, 2.0 i 16v Turbo** 09/05 - 77 -147 kW	**22-141590** **22-141606** i.V. SP	**19-141626**	without IDS+ suspension
B6 Sport	**1.6, 1.8, 1.9 CDTi 16v, 2.0, 2.0 i 16v Turbo** 09/05 - 77 -147 kW	**35-114666** **35-114673**	**24-118576**	without IDS+ suspension
VAUXHALL ASTRA MK VI				
B4	**1.3 CDTI 16V, 1.4 i 16v VVT, 1.4 i 16v VVT Turbo, 1.4 Turbo, 1.6 i 16v Turbo, 1.6 i 16v VVT, 1.7 CDTI, 2.0 CDTi** 12/09 - 64 -132 kW	**22-183644** **22-183651**	**19-183633**	without FlexRide; with standard chassis
B6 Sport	**1.3 CDTI 16V, 1.4 i 16v VVT, 1.4 i 16v VVT Turbo, 1.4 Turbo, 1.6 i 16v Turbo, 1.6 i 16v VVT, 1.7 CDTI, 2.0 CDTi** 12/09 - 64 -132 kW	**35-171669** **35-171676**	**24-171687**	without FlexRide; with standard chassis
B6 Sport	**1.3 CDTI 16V, 1.4 i 16v VVT, 1.4 i 16v VVT Turbo, 1.4 Turbo, 1.6 i 16v Turbo, 1.6 i 16v VVT, 1.7 CDTI, 2.0 CDTi** 12/09 - 64 -132 kW	**35-171690** **35-171706**	**24-171717**	without FlexRide; with sports suspension

V

VAUXHALL

VAUXHALL ASTRA MK VI

B8	**1.3 CDTI 16V, 1.4 i 16v VVT, 1.4 i 16v VVT Turbo, 1.4 Turbo, 1.6 i 16v Turbo, 1.6 i 16v VVT, 1.7 CDTI, 2.0 CDTi** 12/09 - 64 -132 kW	**35-171690** **35-171706**	**24-171717**	without FlexRide; with standard chassis
B12 PK	**1.6 i 16v Turbo** 12/09 - 132 kW	**46-188762**		without FlexRide; Conditions see certificates VA: lowering (expertise): 30 mm; axle load to: 1080 kg HA: lowering (expertise): 30 mm; axle load to: 1020 kg
B12 PK	**1.3 CDTI 16V, 1.4 i 16v VVT, 1.4 i 16v VVT Turbo, 1.4 Turbo, 1.6 i 16v Turbo, 1.6 i 16v VVT** 12/09 - 64 -132 kW	**46-188755**		without FlexRide; Conditions see certificates VA: lowering (expertise): 30 mm; axle load to: 995 kg HA: lowering (expertise): 30 mm; axle load to: 1020 kg
B12 PK	**1.7 CDTI, 2.0 CDTi** 12/09 - 74 -121 kW	**46-188779**		without FlexRide; Conditions see certificates VA: lowering (expertise): 30 mm; axle load to: 1155 kg HA: lowering (expertise): 30 mm; axle load to: 1020 kg
B14	**1.3 CDTI 16V, 1.4 i 16v VVT, 1.4 i 16v VVT Turbo, 1.4 Turbo, 1.6 i 16v Turbo, 1.6 i 16v VVT, 1.7 CDTI, 2.0 CDTi** 12/09 - 64 -132 kW	**47-171725**		without FlexRide; Conditions see certificates VA: lowering (expertise): 30-50 mm; axle load to: 1220 kg HA: lowering (expertise): 30-50 mm; axle load to: 1020 kg

VAUXHALL ASTRA Mk VI (J) Sports Tourer

B4	**1.3 CDTi 16V, 1.4 i 16V, 1.6 i 16V, 1.6 Turbo, 1.7 CDTI, 1.7 CDTi 16V, 2.0 CDTi, 2.0 CDTi 16V** 12/09 - 70 -132 kW	**22-183644** **22-183651**	**19-183633**	without FlexRide; with standard chassis
B6 Sport	**1.3 CDTi 16V, 1.4 i 16V, 1.6 i 16V, 1.6 Turbo, 1.7 CDTI, 1.7 CDTi 16V, 2.0 CDTi, 2.0 CDTi 16V** 12/09 - 70 -132 kW	**35-171669** **35-171676**	**24-171687**	without FlexRide; with standard chassis
B8	**1.3 CDTi 16V, 1.4 i 16V, 1.6 i 16V, 1.6 Turbo, 1.7 CDTI, 1.7 CDTi 16V, 2.0 CDTi, 2.0 CDTi 16V** 12/09 - 70 -132 kW	**35-171690** **35-171706**	**24-171717**	without FlexRide; with sports suspension
B14	**1.3 CDTi 16V, 1.4 i 16V, 1.6 i 16V, 1.6 Turbo, 1.7 CDTI, 1.7 CDTi 16V, 2.0 CDTi, 2.0 CDTi 16V** 12/09 - 70 -132 kW	**47-171725**		without FlexRide; Conditions see certificates VA: lowering (expertise): 30-50 mm; axle load to: 1220 kg HA: lowering (expertise): 30-50 mm; axle load to: 1020 kg

VAUXHALL ASTRAVAN Mk III

B1	**1.4 i, 1.6 i, 1.7 D, 1.7 TD** 01/91 - 08/98 44 -55 kW	**12-116812**		VA: with ball bearing
B2	**1.4 i, 1.6 i, 1.7 D, 1.7 TD** 01/91 - 08/98 44 -55 kW	**16-031548** **11-101369** SP		
B4	**1.4 i, 1.6 i, 1.7 D, 1.7 TD** 01/91 - 08/98 44 -55 kW	**21-030260** **11-101369** SP		
B6 Sport	**1.4 i, 1.6 i, 1.7 D, 1.7 TD** 01/91 - 08/98 44 -55 kW	**34-030035**	**24-016476**	HA: firmer setting
B8	**1.4 i, 1.6 i, 1.7 D, 1.7 TD** 01/91 - 08/98 44 -55 kW	**34-181577**	**24-016483**	
B12 PK	**1.4 i, 1.6 i, 1.7 D, 1.7 TD** 01/91 - 08/98 44 -55 kW	**46-188878**		Conditions see certificates VA: lowering (expertise): 30 mm; axle load to: 870 kg HA: lowering (expertise): 30 mm; axle load to: 860 kg

V

VAUXHALL				
VAUXHALL ASTRAVAN Mk IV				
B1	**1.6 i, 1.7 CDTI, 1.7 DTI, 1.7 TD, 2.0 DI, 2.0 DTI** 08/98 - 50 -74 kW	**12-117376**		VA: Hard Version; without ball bearing
B1	**1.6 i, 1.7 CDTI, 1.7 DTI, 1.7 TD, 2.0 DI, 2.0 DTI** 08/98 - 50 -74 kW	**12-117390**		VA: Soft Version; without ball bearing
B4	**1.6 i, 1.7 CDTI, 1.7 DTI, 1.7 TD, 2.0 DI, 2.0 DTI** 08/98 - 50 -74 kW	**22-053060** **22-053077** **11-101512** SP	**19-068756**	
B6 Sport	**1.6 i, 1.7 CDTI, 1.7 DTI, 1.7 TD, 2.0 DI, 2.0 DTI** 08/98 - 50 -74 kW	**35-044338**	**24-027847**	
B8	**1.6 i, 1.7 CDTI, 1.7 DTI, 1.7 TD, 2.0 DI, 2.0 DTI** 08/98 - 50 -74 kW	**35-044345**	**24-027823**	
B12 PK	**1.6 i** 08/98 - 55 -62 kW	**46-188991**		without ride height adjustment; Conditions see certificates VA: lowering (expertise): 30 mm; axle load to: 845 kg HA: lowering (expertise): 30 mm; axle load to: 885 kg
B12 PK	**1.7 CDTI, 1.7 DTI, 1.7 TD, 2.0 DI, 2.0 DTI** 08/98 - 50 -74 kW	**46-188953**		without ride height adjustment; Conditions see certificates VA: lowering (expertise): 30 mm; axle load to: 935 kg HA: lowering (expertise): 30 mm; axle load to: 885 kg
VAUXHALL ASTRAVAN MK V				
B3	**1.4 i 16V, 1.6** 03/05 - 66 -76 kW	**37-163570**	**38-162374**	with standard chassis
B3	**1.4 i 16V, 1.6** 03/05 - 66 -76 kW	**37-163563**	**38-162350**	with standard chassis; Heavy Duty Version .
B3	**1.4 i 16V, 1.6** 03/05 - 66 -76 kW		**38-162367**	with standard chassis; with ride height adjustment
B3	**1.3 CDTi 16V, 1.7 CDTi, 1.7 CDTI 16V, 1.9 CDTi, 1.9 CDTi 16V** 03/05 - 59 -110 kW	**37-163556**	**38-162374**	with standard chassis
B3	**1.3 CDTi 16V, 1.7 CDTi, 1.7 CDTI 16V, 1.9 CDTi, 1.9 CDTi 16V** 03/05 - 59 -110 kW		**38-162350**	with standard chassis; Heavy Duty Version .
B3	**1.3 CDTi 16V, 1.7 CDTi, 1.7 CDTI 16V, 1.9 CDTi, 1.9 CDTi 16V** 03/05 - 59 -110 kW		**38-162367**	with standard chassis; with ride height adjustment
B4	**1.3 CDTi 16V, 1.4 i 16V, 1.6, 1.7 CDTi, 1.7 CDTI 16V, 1.9 CDTi, 1.9 CDTi 16V** 03/05 - 59 -110 kW	**22-141590** **22-141606** i.V. SP	**19-141626**	without IDS+ suspension
B6 Sport	**1.3 CDTi 16V, 1.4 i 16V, 1.6, 1.7 CDTi, 1.7 CDTI 16V, 1.9 CDTi, 1.9 CDTi 16V** 03/05 - 59 -110 kW	**35-114635** **35-114642**	**24-118576**	without IDS+ suspension
B8	**1.3 CDTi 16V, 1.4 i 16V, 1.6, 1.7 CDTi, 1.7 CDTI 16V, 1.9 CDTi, 1.9 CDTi 16V** 03/05 - 59 -110 kW	**35-114666** **35-114673**	**24-118576**	without IDS+ suspension
B12 PK	**1.4 i 16V, 1.6** 03/05 - 66 -76 kW	**46-182142**		disconect ITS+; Conditions see certificates VA: lowering (expertise): 30-35 mm; axle load to: 970 kg HA: without ride height adjustment; lowering (expertise): 25-30 mm; axle load to: 940 kg
B12 PK	**1.3 CDTi 16V, 1.7 CDTi, 1.7 CDTI 16V, 1.9 CDTi, 1.9 CDTi 16V** 03/05 - 59 -110 kW	**46-182159**		disconect ITS+; Conditions see certificates VA: lowering (expertise): 30-35 mm; axle load to: 1075 kg HA: without ride height adjustment; lowering (expertise): 25-30 mm; axle load to: 940 kg

V

VAUXHALL

VAUXHALL ASTRAVAN MK V

B12 SL	**1.6** 03/05 - 76 kW	**46-182197**		disconect ITS+; Conditions see certificates VA: lowering (expertise): 40-45 mm; axle load to: 1025 kg HA: without ride height adjustment; lowering (expertise): 35 mm; axle load to: 940 kg
B12 SL	**1.3 CDTi 16V, 1.4 i 16V, 1.7 CDTi, 1.7 CDTI 16V** 03/05 - 59 -74 kW	**46-182197**		disconect ITS+; Conditions see certificates VA: lowering (expertise): 40-45 mm; axle load to: 1025 kg HA: without ride height adjustment; lowering (expertise): 35 mm; axle load to: 940 kg

VAUXHALL CALIBRA

B1	**2.0 i, 2.0 i 16V, 2.5 i V6** 06/90 - 07/97 85 -125 kW	**12-116805**		VA: with ball bearing
B3	**2.0 i, 2.0 i 16V, 2.5 i V6** 06/90 - 07/97 85 -125 kW	**36-133932**	*38-130458*	with standard chassis
B3	**2.0 i 16V 4x4, 2.0 i 4x4, 2.0 i Turbo 4x4** 03/92 - 07/97 85 -150 kW	**36-162642**		with standard chassis; all-wheel drive
B4	**2.0 i, 2.0 i 16V, 2.0 i 16V 4x4, 2.0 i 4x4, 2.0 i Turbo 4x4, 2.5 i V6** 06/90 - 07/97 85 -150 kW	**21-030529** **11-101314** SP	**19-019758**	
B6 Sport	**2.0 i, 2.0 i 16V, 2.0 i 16V 4x4, 2.0 i 4x4, 2.0 i Turbo 4x4, 2.5 i V6** 06/90 - 07/97 85 -150 kW	**34-003725**	**24-016100**	
B8	**2.0 i, 2.0 i 16V, 2.5 i V6** 06/90 - 07/97 85 -125 kW	**34-181584**	**24-016100**	
B8	**2.0 i 16V 4x4, 2.0 i 4x4, 2.0 i Turbo 4x4** 03/92 - 07/97 85 -150 kW	**34-181584**	**24-016100**	
B12 PK	**2.0 i, 2.0 i 16V, 2.0 i 16V 4x4** 06/90 - 07/97 85 -110 kW	**46-192851**		Conditions see certificates VA: lowering (expertise): 30 mm; axle load to: 885 kg HA: lowering (expertise): 30 mm; axle load to: 880 kg
B12 PK	**2.0 i 4x4** 06/90 - 07/97 85 kW	**46-192851**		Conditions see certificates VA: lowering (expertise): 30 mm; axle load to: 885 kg HA: lowering (expertise): 30 mm; axle load to: 880 kg

VAUXHALL CARLTON Mk II

B4	**1.8 S, 2.0 i, 2.0 S, 2.2 i, 2.3 D** 10/78 - 08/86 52 -85 kW	*21-030376* **11-101369** SP		
B6 Sport	**1.8 S, 2.0 i, 2.0 S, 2.2 i, 2.3 D** 10/78 - 08/86 52 -85 kW	*34-001417*	**24-008938**	VA: Quick Repair Service .; Used part return required . HA: charakteristic: 220/80

VAUXHALL CARLTON Mk II Estate

B4	**1.8 S, 1.9, 2.0 S, 2.2 i, 2.3 D, 1.8** 01/82 - 08/88 52 -85 kW	*21-030376* **11-101369** SP		
B6 Sport	**1.8 S, 1.9, 2.0 S, 2.2 i, 2.3 D** 01/82 - 08/86 52 -85 kW	*34-001417*		VA: Quick Repair Service .; Used part return required .

VAUXHALL CARLTON Mk III

B3	**1.8, 1.8 i, 1.8 N, 1.8 S, 2.0, 2.0 i, 2.2 TD, 2.3 D, 2.3 TD Interc., 2.4 i, 2.6 i, 3.0 3000, 3.0 3000 24V, 3000, 3000 24V, 3000 CAT** 03/87 - 03/94 54 -150 kW	**36-133994** **36-134007**	**38-130328**	with standard chassis
B3	**1.8, 1.8 i, 1.8 N, 1.8 S, 2.0, 2.0 i, 2.2 TD, 2.3 D, 2.3 TD Interc., 2.4 i, 2.6 i, 3.0 3000, 3.0 3000 24V, 3000, 3000 24V, 3000 CAT** 03/87 - 03/94 54 -150 kW	**36-130474**	**38-130304**	with standard chassis; Heavy Duty Version .

V

VAUXHALL				
VAUXHALL CARLTON Mk III				
B4	**1.8, 1.8 i, 1.8 N, 1.8 S, 2.0, 2.0 i, 2.2 TD, 2.3 D, 2.3 TD Interc., 2.4 i, 2.6 i, 3.0 3000, 3.0 3000 24V, 3000, 3000 24V, 3000 CAT** 03/87 - 03/94 54 -150 kW	**22-031204** **11-122456** SP	**19-020006**	with standard chassis
B6 Sport	**1.8, 1.8 i, 1.8 N, 1.8 S, 2.0, 2.0 i, 2.2 TD, 2.3 D, 2.3 TD Interc., 2.4 i, 2.6 i, 3.0 3000, 3.0 3000 24V, 3.6 24V Lotus, 3000, 3000 24V, 3000 CAT** 03/87 - 03/94 54 -277 kW	**35-000945**	**24-011105**	with standard chassis
B8	**1.8, 1.8 i, 1.8 N, 1.8 S, 2.0, 2.0 i, 2.2 TD, 2.3 D, 2.3 TD Interc., 2.4 i, 2.6 i, 3.0 3000, 3.0 3000 24V, 3.6 24V Lotus, 3000, 3000 24V, 3000 CAT** 03/87 - 03/94 54 -277 kW	**35-003717**	**24-015288**	with standard chassis
VAUXHALL CARLTON Mk III Estate				
B3	**1.8, 1.8 i, 1.8 N, 1.8 S, 2.0, 2.0 i, 2.4 i, 2.6 i** 09/86 - 03/94 60 -110 kW	**36-133994** **36-134007**	**38-130304**	with standard chassis
B3	**1.8, 1.8 i, 1.8 N, 1.8 S, 2.0, 2.0 i, 2.4 i, 2.6 i** 09/86 - 03/94 60 -110 kW	**36-130474**	**38-130311**	with standard chassis; Heavy Duty Version .
B3	**2.2 TD, 2.3 D, 2.3 TD Interc., 3.0, 3.0 24V** 09/86 - 03/94 54 -147 kW	**36-130474**	**38-130304**	with standard chassis
B3	**2.2 TD, 2.3 D, 2.3 TD Interc., 3.0, 3.0 24V** 09/86 - 03/94 54 -147 kW		**38-130311**	with standard chassis; Heavy Duty Version .
B4	**1.8, 1.8 i, 1.8 N, 1.8 S, 2.0, 2.0 i, 2.2 TD, 2.3 D, 2.3 TD Interc., 2.4 i, 2.6 i, 3.0, 3.0 24V** 03/87 - 03/94 54 -147 kW	**22-031204** **11-122456** SP	**19-028538**	with standard chassis; without ride height adjustment
B6 Sport	**1.8, 1.8 i, 1.8 N, 1.8 S, 2.0, 2.0 i, 2.2 TD, 2.3 D, 2.3 TD Interc., 2.4 i, 2.6 i, 3.0, 3.0 24V** 03/87 - 03/94 54 -147 kW	**35-000945**	**24-017701**	with standard chassis; without ride height adjustment
B6 Sport	**1.8** 09/86 - 08/88 74 kW	*34-001417*		VA: Quick Repair Service .; Used part return required .
VAUXHALL CAVALIER CC				
B4	**1.3, 1600, 2000** 08/75 - 08/81 42 -74 kW	**19-019444**	*19-019604*	
B6 Sport	**1.3, 1600, 2000** 08/75 - 08/81 42 -74 kW	**24-006866**	**24-000918**	VA: charakteristic: 150/60 HA: charakteristic: 274/95
VAUXHALL CAVALIER				
B4	**1.6 N, 1.6 S, 1300, 1900, 2.0 S** 03/75 - 08/81 44 -74 kW	**19-019444**	*19-019604*	
B6 Sport	**1.6 N, 1.6 S, 1300, 1900, 2.0 S** 03/75 - 08/81 44 -74 kW	**24-006866**	**24-000918**	VA: charakteristic: 150/60 HA: charakteristic: 274/95
VAUXHALL CAVALIER Coupe				
B4	**1.3, 1.9 S, 2.0 S** 08/75 - 08/81 42 -74 kW	**19-019444**	*19-019604*	

BILSTEIN®

VAUXHALL

VAUXHALL CAVALIER Coupe

B6 Sport	**1.3, 1.9 S, 2.0 S** 08/75 - 08/81 42 -74 kW	**24-006866**	**24-000918**	VA: charakteristic: 150/60 HA: charakteristic: 274/95

VAUXHALL CAVALIER Mk II Hatchback

B4	**1.3, 1.3 S, 1.6 S, 1.8 i, 1600D** 09/81 - 08/84 40 -85 kW	*21-030437* **11-101314** SP	**19-019864**	-> CH.Nr.: F1.003.026; -> CH.Nr.: F5.000.000; -> CH.Nr.: 6.000.000
B4	**1.3, 1.3 S, 1.6 S, 1.8 i, 1600D** 09/84 - 08/88 40 -85 kW		**19-019864**	CH.Nr.: F1.003.027 ->; CH.Nr.: F5.000.001 ->; CH.Nr.: 6.000.001 ->
B4	**2.0, 2.0 i CAT, 2.0 SRi 130, 2000i** 09/86 - 08/88 74 -95 kW		**19-019864**	
B6 Sport	**1.3, 1.3 S, 1.6 S, 1.8 i, 1600D, 2.0, 2.0 i CAT, 2.0 SRi 130, 2000i** 09/81 - 08/88 40 -95 kW		*24-000970*	

VAUXHALL CAVALIER Mk II

B4	**1.3 N, 1.3 S, 1.6, 1.6 D, 1.6 N, 1.6 S, 1.8 i** 08/81 - 08/84 40 -85 kW	*21-030437* **11-101314** SP	**19-019864**	-> CH.Nr.: F1.003.026; -> CH.Nr.: F5.000.000; -> CH.Nr.: 6.000.000
B4	**1.3 N, 1.3 S, 1.6, 1.6 D, 1.6 N, 1.6 S, 1.8 i** 09/84 - 08/88 40 -85 kW		**19-019864**	CH.Nr.: F1.003.027 ->; CH.Nr.: F5.000.001 ->; CH.Nr.: 6.000.001 ->
B4	**1.6 i, 1.6 i CAT, 1.8, 1.8 i CAT, 2.0, 2.0 i, 2.0 i CAT, 2.0 SRi 130, 2000i** 01/85 - 08/88 55 -95 kW		**19-019864**	
B6 Sport	**1.3 N, 1.3 S, 1.6, 1.6 D, 1.6 i, 1.6 i CAT, 1.6 N, 1.6 S, 1.8, 1.8 i, 1.8 i CAT, 2.0, 2.0 i, 2.0 i CAT, 2.0 SRi 130, 2000i** 08/81 - 08/88 40 -95 kW		*24-000970*	

VAUXHALL CAVALIER Mk III Hatchback

B1	**1.4 S, 1.6, 1.6 i, 1.7 D, 1.7 TD** 09/88 - 11/95 42 -60 kW	**12-117635**		VA: with ball bearing
B1	**1.8, 1.8 i CAT, 2.0 i, 2.0 i 16V, 2.0 i 16V 4x4, 2.0 i 4x4, 2.0 i CAT, 2.0 SRi** 09/88 - 09/92 66 -110 kW	**12-117635**		Soft Version VA: with ball bearing
B1	**1.8, 1.8 i CAT, 2.0 i, 2.0 i 16V, 2.0 i 16V 4x4, 2.0 i 4x4, 2.0 i CAT, 2.0 SRi** 09/88 - 09/92 66 -110 kW	**12-116805**		Hard Version VA: with ball bearing
B2	**1.4 S, 1.6, 1.6 i, 1.7 D, 1.7 TD, 1.8, 1.8 i CAT, 2.0 i, 2.0 i 16V, 2.0 i CAT, 2.0 SRi** 09/88 - 11/95 42 -110 kW	**16-031333** **11-101314** SP	**15-062215**	
B4	**1.4 S, 1.6, 1.6 i, 1.7 D, 1.7 TD, 1.8, 1.8 i CAT, 2.0 i, 2.0 i 16V, 2.0 i CAT, 2.0 SRi, 2.5 V6** 09/88 - 11/95 42 -125 kW	**21-030529** **11-101314** SP	**19-019956**	
B4	**2.0 i 16V 4x4, 2.0 i 4x4** 09/88 - 11/93 85 -110 kW	**21-030529** **11-101314** SP	**19-020006**	
B6 Sport	**1.4 S, 1.6, 1.6 i, 1.7 D, 1.7 TD, 1.8, 1.8 i CAT, 2.0 i, 2.0 i 16V, 2.0 i CAT, 2.0 SRi, 2.5 V6** 09/88 - 11/95 42 -125 kW	**34-003671**	**24-015554**	

V

VAUXHALL

VAUXHALL CAVALIER Mk III Hatchback

B6 Sport	**2.0 i 16V 4x4, 2.0 i 4x4** 09/88 - 11/93 85 -110 kW	**34-003671**	**24-016100** *24-016582*	
B8	**1.4 S, 1.6, 1.6 i, 1.7 D, 1.7 TD, 1.8, 1.8 i CAT, 2.0 i, 2.0 i 16V, 2.0 i CAT, 2.0 SRi, 2.5 V6** 09/88 - 11/95 42 -125 kW	**34-001592**	**24-013932**	HA: charakteristic: 107/36
B8	**2.0 i 16V 4x4, 2.0 i 4x4** 09/88 - 11/93 85 -110 kW	**34-001592**	**24-016100**	

VAUXHALL CAVALIER Mk III (87)

B1	**1.4 S, 1.6, 1.6 i, 1.7 D, 1.7 TD** 09/88 - 11/95 42 -60 kW	**12-117635**		VA: with ball bearing
B1	**1.8, 1.8 i CAT, 2.0 i, 2.0 i 4x4, 2.0 i 16V, 2.0 i 16V 4x4, 2.0 i 4x4, 2.0 i CAT, 2.0 i Turbo 4x4, 2.0 SRi, 2.0 SRi 16V** 09/88 - 11/95 66 -150 kW	**12-116805**		Hard Version VA: with ball bearing
B1	**1.8, 1.8 i CAT, 2.0 i, 2.0 i 4x4, 2.0 i 16V, 2.0 i 16V 4x4, 2.0 i 4x4, 2.0 i CAT, 2.0 i Turbo 4x4, 2.0 SRi, 2.0 SRi 16V** 09/88 - 11/95 66 -150 kW	**12-117635**		VA: with ball bearing; Soft Version
B2	**1.4 S, 1.6, 1.6 i, 1.7 D, 1.7 TD, 1.8, 1.8 i CAT, 2.0 i, 2.0 i CAT, 2.0 SRi** 09/88 - 11/95 42 -95 kW	**16-031333** **11-101314** *SP*	**15-062215**	
B3	**1.6, 1.6 i, 1.8, 1.8 i CAT, 2.0 i, 2.0 i 16V, 2.0 i CAT, 2.0 SRi, 2.0 SRi 16V** 09/88 - 11/95 52 -110 kW	**36-130412**	**38-130298**	with standard chassis
B3	**1.6, 1.6 i, 1.7 D, 1.7 TD, 1.8, 1.8 i CAT, 2.0 i, 2.0 i 16V, 2.0 i CAT, 2.0 SRi, 2.0 SRi 16V** 09/88 - 11/95 42 -110 kW	**36-130443**		with standard chassis; Heavy Duty Version .
B3	**1.7 D, 1.7 TD** 09/88 - 11/95 42 -60 kW	**36-130436**	**38-130298**	with standard chassis
B4	**1.4 S, 1.6, 1.6 i, 1.7 D, 1.7 TD, 1.8, 1.8 i CAT, 2.0 i, 2.0 i 16V, 2.0 i CAT, 2.0 SRi, 2.0 SRi 16V, 2.5 V6** 08/88 - 11/95 42 -125 kW	**21-030529** **11-101314** *SP*	**19-019956**	
B4	**2.0 i 4x4, 2.0 i 16V 4x4, 2.0 i 4x4, 2.0 i Turbo 4x4** 09/88 - 11/94 85 -150 kW	**21-030529** **11-101314** *SP*	**19-020006**	
B6 Sport	**1.4 S, 1.6, 1.6 i, 1.7 D, 1.7 TD, 1.8, 1.8 i CAT, 2.0 i, 2.0 i 16V, 2.0 i CAT, 2.0 SRi, 2.0 SRi 16V, 2.5 V6** 08/88 - 11/95 42 -125 kW	**34-003671**	**24-015554**	
B6 Sport	**2.0 i 4x4, 2.0 i 16V 4x4, 2.0 i 4x4, 2.0 i Turbo 4x4** 09/88 - 11/94 85 -150 kW	**34-003671**	**24-016100** *24-016582*	
B8	**1.4 S, 1.6, 1.6 i, 1.7 D, 1.7 TD, 1.8, 1.8 i CAT, 2.0 i, 2.0 i 16V, 2.0 i CAT, 2.0 SRi, 2.0 SRi 16V, 2.5 V6** 08/88 - 11/95 42 -125 kW	**34-001592**	**24-013932**	HA: charakteristic: 107/36
B8	**2.0 i 4x4, 2.0 i 16V 4x4, 2.0 i 4x4, 2.0 i Turbo 4x4** 09/88 - 11/94 85 -150 kW	**34-001592**	**24-016100**	

V

VAUXHALL				
VAUXHALL CHEVETTE				
B4	**1300** 03/75 - 12/85 39 -42 kW	**19-019444**		
VAUXHALL CHEVETTE Hatchback				
B4	**1300** 03/75 - 12/85 39 -42 kW	**19-019444**	*19-019598*	
VAUXHALL CHEVETTE Estate				
B4	**1.2, 1300** 09/76 - 12/85 39 -42 kW	**19-019444**		
B6 Sport	**1.2, 1300** 09/76 - 12/85 39 -42 kW		**24-004930**	
VAUXHALL COMBO				
B2	**1.2, 1.4, 1.7 D** 07/94 - 10/01 33 -60 kW	**17-104104**		
B4	**1.2, 1.4, 1.7 D** 07/94 - 10/01 33 -60 kW	**22-040909** **11-101314** *SP*	**19-019970**	
VAUXHALL COMBO				
B1	**1.3 CDTI 16V, 1.4, 1.6, 1.7 CDTI 16V, 1.7 DI 16V, 1.7 DTI 16V** 10/01 - 48 -74 kW	**12-224036**		VA: with ball bearing
B4	**1.3 CDTI 16V, 1.4, 1.6, 1.7 CDTI 16V, 1.7 DI 16V, 1.7 DTI 16V** 10/01 - 48 -74 kW	**22-110442** **22-110459**	**19-115351**	with standard chassis
VAUXHALL CORSA				
B1	**1.0 i 12V, 1.2 i, 1.2 i 16V, 1.4 i, 1.4 i 16V, 1.4 i S, 1.5 D, 1.5 TD, 1.6 GSI 16V, 1.6 i 16V, 1.7 D** 02/96 - 09/00 33 -80 kW	**12-224197**		VA: with ball bearing
B2	**1.0 i 12V, 1.2 i, 1.2 i 16V, 1.4 i, 1.4 i 16V, 1.4 i S, 1.5 D, 1.5 TD, 1.6 GSI 16V, 1.6 i 16V, 1.7 D** 02/96 - 09/00 33 -80 kW	**17-104104** **11-101314** *SP*	**15-126405**	
B3	**1.2 i, 1.2 i 16V, 1.4 i, 1.4 i 16V, 1.4 i S** 03/93 - 09/00 33 -66 kW	**36-130337**	**38-130342**	with standard chassis
B3	**1.2 i, 1.2 i 16V, 1.4 i, 1.4 i 16V, 1.5 D, 1.7 D** 03/93 - 09/00 33 -66 kW	**36-130108**	**38-130403**	with standard chassis; Heavy Duty Version .
B3	**1.6 GSI 16V** 03/93 - 09/00 80 kW	**36-161447**	**38-120008**	with standard chassis
B3	**1.6 GSI 16V** 03/93 - 09/00 80 kW		**38-130403**	with standard chassis; Heavy Duty Version .
B3	**1.5 D, 1.7 D** 03/93 - 09/00 37 -44 kW	**36-133949**	**38-130342**	with standard chassis
B3	**1.5 TD** 03/93 - 10/96 49 kW	**36-130108**	**38-130342**	with standard chassis
B3	**1.5 TD** 03/93 - 10/96 49 kW		**38-130403**	with standard chassis; Heavy Duty Version .

V

VAUXHALL

VAUXHALL CORSA

B4	**1.0 i 12V, 1.2 i, 1.2 i 16V, 1.4 i, 1.4 i 16V, 1.4 i S, 1.5 D, 1.5 TD, 1.6 GSI 16V, 1.6 i 16V, 1.7 D** 02/96 - 09/00 33 -80 kW	**22-040909** **11-101314** *SP*	**19-126395**	
B4	**1.0 i 12V, 1.2 i, 1.2 i 16V, 1.4 i, 1.4 i 16V, 1.4 i S, 1.5 D, 1.5 TD, 1.6 GSI 16V, 1.6 i 16V, 1.7 D** 02/96 - 09/00 33 -80 kW	**22-040909** **11-101314** *SP*	**19-019727**	with sports suspension
B6 Sport	**1.0 i 12V, 1.2 i, 1.2 i 16V, 1.4 i, 1.4 i 16V, 1.4 i S, 1.5 D, 1.5 TD, 1.6 GSI 16V, 1.6 i 16V, 1.7 D** 02/96 - 09/00 33 -80 kW	**35-040590**	**24-000857**	
B8	**1.0 i 12V, 1.2 i, 1.2 i 16V, 1.4 i, 1.4 i 16V, 1.4 i S, 1.5 D, 1.5 TD, 1.6 GSI 16V, 1.6 i 16V, 1.7 D** 02/96 - 09/00 33 -80 kW	**35-040590**	**24-000857**	
B10	**1.0 i 12V, 1.2 i, 1.2 i 16V, 1.4 i, 1.4 i 16V, 1.4 i S, 1.5 D, 1.5 TD, 1.6 GSI 16V, 1.6 i 16V, 1.7 D** 02/96 - 09/00 33 -80 kW	**46-111951**		Conditions see certificates VA: lowering (expertise): 55 mm; axle load to: 840 kg HA: lowering (expertise): 50 mm; axle load to: 700 kg
B12 PK	**1.0 i 12V, 1.2 i, 1.2 i 16V, 1.4 i, 1.4 i 16V, 1.4 i S, 1.6 GSI 16V, 1.6 i 16V** 09/94 - 09/00 33 -80 kW	**46-189011**		Conditions see certificates VA: lowering (expertise): 30 mm; axle load to: 790 kg HA: lowering (expertise): 30 mm; axle load to: 700 kg
B12 SL	**1.0 i 12V, 1.2 i, 1.2 i 16V, 1.4 i, 1.4 i 16V, 1.4 i S, 1.6 GSI 16V, 1.6 i 16V** 09/94 - 09/00 33 -80 kW	**46-189004**		Conditions see certificates VA: lowering (expertise): 45-50 mm; axle load to: 790 kg HA: lowering (expertise): 25 mm; axle load to: 700 kg
B14	**1.0 i 12V, 1.2 i, 1.2 i 16V, 1.4 i, 1.4 i 16V, 1.4 i S, 1.5 D, 1.5 TD, 1.6 GSI 16V, 1.6 i 16V, 1.7 D** 02/96 - 09/00 33 -80 kW	**47-080713**		Conditions see certificates VA: lowering (expertise): 30-50 mm; axle load to: 820 kg HA: lowering (expertise): 30-50 mm; axle load to: 700 kg
B16 PSS9	**1.0 i 12V, 1.2 i, 1.2 i 16V, 1.4 i, 1.4 i 16V, 1.4 i S, 1.5 D, 1.5 TD, 1.6 GSI 16V, 1.6 i 16V, 1.7 D** 02/96 - 09/00 33 -80 kW	**48-080767**		Conditions see certificates VA: lowering (expertise): 30-50 mm; axle load to: 820 kg HA: lowering (expertise): 30-50 mm; axle load to: 700 kg
MS	**1.0 i 12V, 1.2 i, 1.2 i 16V, 1.4 i, 1.4 i 16V, 1.4 i S, 1.5 D, 1.5 TD, 1.6 GSI 16V, 1.6 i 16V, 1.7 D** 02/96 - 09/00 33 -80 kW	*35-041757*	**24-023917**	mark: Rallye VA: charakteristic: 230/80 HA: charakteristic: 200/80
MS	**1.0 i 12V, 1.2 i, 1.2 i 16V, 1.4 i, 1.4 i 16V, 1.4 i S, 1.5 D, 1.5 TD, 1.6 GSI 16V, 1.6 i 16V, 1.7 D** 02/96 - 09/00 33 -80 kW	**35-042136**	**24-023900**	mark: Renen Gruppe N+G VA: charakteristic: 230/80; rebound: 20 mm HA: charakteristic: 200/80; rebound: 20 mm

VAUXHALL CORSA Convertible

B1	**1.4 i 16V** 01/98 - 01/99 66 kW	**12-224197**		VA: with ball bearing
B2	**1.4 i 16V** 01/98 - 01/99 66 kW	**17-104104** **11-101314** *SP*	**15-126405**	
B4	**1.4 i 16V** 01/98 - 01/99 66 kW	**22-040909** **11-101314** *SP*	**19-126395**	
B4	**1.4 i 16V** 01/98 - 01/99 66 kW	**22-040909** **11-101314** *SP*	**19-019727**	with sports suspension
B6 Sport	**1.4 i 16V** 01/98 - 01/99 66 kW	**35-040590**	**24-000857**	

VAUXHALL

VAUXHALL CORSA Convertible

B8	**1.4 i 16V** 01/98 - 01/99 66 kW	**35-040590**	**24-000857**	
B10	**1.4 i 16V** 01/98 - 01/99 66 kW	**46-111951**		Conditions see certificates VA: lowering (expertise): 55 mm; axle load to: 840 kg HA: lowering (expertise): 50 mm; axle load to: 700 kg
B12 PK	**1.4 i 16V** 01/98 - 01/99 66 kW	**46-189011**		Conditions see certificates VA: lowering (expertise): 30 mm; axle load to: 790 kg HA: lowering (expertise): 30 mm; axle load to: 700 kg
B12 SL	**1.4 i 16V** 01/98 - 01/99 66 kW	**46-189004**		Conditions see certificates VA: lowering (expertise): 45-50 mm; axle load to: 790 kg HA: lowering (expertise): 25 mm; axle load to: 700 kg
B14	**1.4 i 16V** 01/98 - 01/99 66 kW	**47-080713**		Conditions see certificates VA: lowering (expertise): 30-50 mm; axle load to: 820 kg HA: lowering (expertise): 30-50 mm; axle load to: 700 kg
B16 PSS9	**1.4 i 16V** 01/98 - 01/99 66 kW	**48-080767**		Conditions see certificates VA: lowering (expertise): 30-50 mm; axle load to: 820 kg HA: lowering (expertise): 30-50 mm; axle load to: 700 kg

VAUXHALL CORSAVAN

B1	**1.4 i, 1.5 D, 1.7 D** 01/94 - 09/00 37 -44 kW	**12-224197**		VA: with ball bearing
B2	**1.4 i, 1.5 D, 1.7 D** 01/94 - 09/00 37 -44 kW	**17-104104** **11-101314** SP	**15-126405**	
B4	**1.4 i, 1.5 D, 1.7 D** 01/94 - 09/00 37 -44 kW	**22-040909** **11-101314** SP	**19-126395**	
B4	**1.4 i, 1.5 D, 1.7 D** 01/94 - 09/00 37 -44 kW	**22-040909** **11-101314** SP	**19-019727**	with sports suspension
B6 Sport	**1.4 i, 1.5 D, 1.7 D** 01/94 - 09/00 37 -44 kW	**35-040590**	**24-000857**	
B8	**1.4 i, 1.5 D, 1.7 D** 01/94 - 09/00 37 -44 kW	**35-040590**	**24-000857**	
B10	**1.4 i, 1.5 D, 1.7 D** 01/94 - 09/00 37 -44 kW	**46-111951**		Conditions see certificates VA: lowering (expertise): 55 mm; axle load to: 840 kg HA: lowering (expertise): 50 mm; axle load to: 700 kg
B12 PK	**1.4 i** 01/94 - 09/00 44 kW	**46-189011**		Conditions see certificates VA: lowering (expertise): 30 mm; axle load to: 790 kg HA: lowering (expertise): 30 mm; axle load to: 700 kg
B12 SL	**1.4 i** 01/94 - 09/00 44 kW	**46-189004**		Conditions see certificates VA: lowering (expertise): 45-50 mm; axle load to: 790 kg HA: lowering (expertise): 25 mm; axle load to: 700 kg
B14	**1.4 i, 1.5 D, 1.7 D** 01/94 - 09/00 37 -44 kW	**47-080713**		Conditions see certificates VA: lowering (expertise): 30-50 mm; axle load to: 820 kg HA: lowering (expertise): 30-50 mm; axle load to: 700 kg
B16 PSS9	**1.4 i, 1.5 D, 1.7 D** 01/94 - 09/00 37 -44 kW	**48-080767**		Conditions see certificates VA: lowering (expertise): 30-50 mm; axle load to: 820 kg HA: lowering (expertise): 30-50 mm; axle load to: 700 kg

VAUXHALL CORSA Mk II

B1	**1.0 12V, 1.2 16V, 1.2 16V Dualfuel, 1.3 CDTI 16V, 1.4 16V, 1.4 Twinport, 1.7 CDTI 16V, 1.7 DI 16V, 1.7 DTI 16V, 1.8 16V** 08/00 - 09/06 43 -92 kW	**12-117390**		VA: Soft Version; without ball bearing
B3	**1.0 12V** 09/00 - 43 -44 kW	**37-130275**	**38-130182**	with standard chassis

V

VAUXHALL

VAUXHALL CORSA Mk II

B3	**1.2 16V** 09/00 - 55 kW	**37-130282**	**38-130182**	with standard chassis
B3	**1.2 16V, 1.3 CDTI 16V, 1.4 16V, 1.4 Twinport, 1.7 CDTI 16V, 1.7 DI 16V, 1.7 DTI 16V, 1.8 16V** 08/00 - 48 -92 kW	**37-162627**	**38-162534**	with sports suspension; mark: GSI
B3	**1.3 CDTI 16V, 1.4 16V, 1.4 Twinport, 1.7 CDTI 16V, 1.7 DI 16V, 1.7 DTI 16V, 1.8 16V** 08/00 - 48 -92 kW	**37-133955**	**38-130182**	with standard chassis
B4	**1.0 12V, 1.2 16V, 1.2 16V Dualfuel, 1.3 CDTI 16V, 1.4 16V, 1.4 Twinport, 1.7 CDTI 16V, 1.7 DI 16V, 1.7 DTI 16V, 1.8 16V** 08/00 - 09/06 43 -92 kW	**22-110442** **22-110459**	**19-108988**	with standard chassis
B4	**1.0 12V, 1.2 16V, 1.2 16V Dualfuel, 1.3 CDTI 16V, 1.4 16V, 1.4 Twinport, 1.7 CDTI 16V, 1.7 DI 16V, 1.7 DTI 16V, 1.8 16V** 08/00 - 09/06 43 -92 kW	**22-118714** **22-118721**	**19-108995**	with sports suspension
B4	**1.0 12V, 1.2 16V, 1.2 16V Dualfuel, 1.3 CDTI 16V, 1.4 16V, 1.4 Twinport, 1.7 CDTI 16V, 1.7 DI 16V, 1.7 DTI 16V, 1.8 16V** 08/00 - 09/06 43 -92 kW	**22-110442** **22-110459**	**19-108995**	with off-road suspension
B6 Sport	**1.0 12V, 1.2 16V, 1.2 16V Dualfuel, 1.3 CDTI 16V, 1.4 16V, 1.4 Twinport, 1.7 CDTI 16V, 1.7 DI 16V, 1.7 DTI 16V, 1.8 16V** 08/00 - 09/06 43 -92 kW	**35-141068** **35-141075**	**24-141086**	with standard chassis HA: drum Brake; thread: M10
B6 Sport	**1.0 12V, 1.2 16V, 1.2 16V Dualfuel, 1.3 CDTI 16V, 1.4 16V, 1.4 Twinport, 1.7 CDTI 16V, 1.7 DI 16V, 1.7 DTI 16V, 1.8 16V** 08/00 - 09/06 43 -92 kW	**35-141068** **35-141075**	**24-142342**	with sports suspension HA: disc Brake; thread: M14
B8	**1.0 12V, 1.2 16V, 1.2 16V Dualfuel, 1.3 CDTI 16V, 1.4 16V, 1.4 Twinport, 1.7 CDTI 16V, 1.7 DI 16V, 1.7 DTI 16V, 1.8 16V** 08/00 - 09/06 43 -92 kW	**35-141099** **35-141105**	**24-141116**	with standard chassis HA: drum Brake; thread: M10
B8	**1.0 12V, 1.2 16V, 1.2 16V Dualfuel, 1.3 CDTI 16V, 1.4 16V, 1.4 Twinport, 1.7 CDTI 16V, 1.7 DI 16V, 1.7 DTI 16V, 1.8 16V** 08/00 - 09/06 43 -92 kW	**35-141099** **35-141105**	**24-142342**	with sports suspension HA: disc Brake; thread: M14
B12 PK	**1.0 12V, 1.2 16V, 1.2 16V Dualfuel, 1.4 16V, 1.4 Twinport, 1.7 CDTI 16V, 1.7 DI 16V, 1.7 DTI 16V, 1.8 16V** 08/00 - 09/06 43 -92 kW	**46-189059**		Conditions see certificates; thread: M10 VA: lowering (expertise): 30 mm; axle load to: 940 kg HA: drum Brake; lowering (expertise): 30 mm; axle load to: 760 kg
B12 PK	**1.0 12V, 1.2 16V, 1.4 16V, 1.4 Twinport** 09/00 - 43 -66 kW	**46-189028**		Conditions see certificates; thread: M14 VA: lowering (expertise): 30 mm; axle load to: 820 kg HA: disc Brake; lowering (expertise): 30 mm; axle load to: 760 kg
B12 PK	**1.2 16V Dualfuel, 1.3 CDTI 16V, 1.7 CDTI 16V, 1.7 DI 16V, 1.7 DTI 16V, 1.8 16V** 08/00 - 48 -92 kW	**46-189035**		Conditions see certificates; thread: M14 VA: lowering (expertise): 30 mm; axle load to: 940 kg HA: disc Brake; lowering (expertise): 30 mm; axle load to: 760 kg
B14	**1.0 12V, 1.2 16V, 1.2 16V Dualfuel, 1.3 CDTI 16V, 1.4 16V, 1.4 Twinport, 1.7 CDTI 16V, 1.7 DI 16V, 1.7 DTI 16V, 1.8 16V** 08/00 - 09/06 43 -92 kW	**47-167254**		Conditions see certificates VA: lowering (expertise): 30-50 mm; axle load to: 900 kg HA: lowering (expertise): 20-40 mm; axle load to: 760 kg

V

VAUXHALL				
VAUXHALL CORSAVAN MK II				
B1	**1.2 16V, 1.2 16V Dualfuel, 1.3 CDTI 16V, 1.4, 1.7 DI 16V, 1.7 DTI 16V** 09/00 - 06/06 48 -66 kW	**12-117390**		VA: Soft Version; without ball bearing
B3	**1.2 16V, 1.2 16V Dualfuel, 1.3 CDTI 16V, 1.4, 1.7 DI 16V, 1.7 DTI 16V** 09/00 - 06/06 48 -66 kW	**37-133955**	**38-130182**	with standard chassis
B3	**1.2 16V, 1.2 16V Dualfuel, 1.3 CDTI 16V, 1.4, 1.7 DI 16V, 1.7 DTI 16V** 09/00 - 06/06 48 -66 kW	**37-162627**	**38-162534**	with sports suspension; mark: GSI
B4	**1.2 16V, 1.2 16V Dualfuel, 1.3 CDTI 16V, 1.4, 1.7 DI 16V, 1.7 DTI 16V** 09/00 - 06/06 48 -66 kW	**22-110442** ↰ **22-110459** ↱	**19-108988**	with standard chassis
B4	**1.2 16V, 1.2 16V Dualfuel, 1.3 CDTI 16V, 1.4, 1.7 DI 16V, 1.7 DTI 16V** 09/00 - 06/06 48 -66 kW	**22-118714** ↰ **22-118721** ↱	**19-108995**	with sports suspension
B4	**1.2 16V, 1.2 16V Dualfuel, 1.3 CDTI 16V, 1.4, 1.7 DI 16V, 1.7 DTI 16V** 09/00 - 06/06 48 -66 kW	**22-110442** ↰ **22-110459** ↱	**19-108995**	with off-road suspension
B6 Sport	**1.2 16V, 1.2 16V Dualfuel, 1.3 CDTI 16V, 1.4, 1.7 DI 16V, 1.7 DTI 16V** 09/00 - 06/06 48 -66 kW	**35-141068** ↰ **35-141075** ↱	**24-141086**	with standard chassis HA: drum Brake; thread: M10
B6 Sport	**1.2 16V, 1.2 16V Dualfuel, 1.3 CDTI 16V, 1.4, 1.7 DI 16V, 1.7 DTI 16V** 09/00 - 06/06 48 -66 kW	**35-141068** ↰ **35-141075** ↱	**24-142342**	with sports suspension HA: disc Brake; thread: M14
B8	**1.2 16V, 1.2 16V Dualfuel, 1.3 CDTI 16V, 1.4, 1.7 DI 16V, 1.7 DTI 16V** 09/00 - 06/06 48 -66 kW	**35-141099** ↰ **35-141105** ↱	**24-141116**	with standard chassis HA: drum Brake; thread: M10
B8	**1.2 16V, 1.2 16V Dualfuel, 1.3 CDTI 16V, 1.4, 1.7 DI 16V, 1.7 DTI 16V** 09/00 - 06/06 48 -66 kW	**35-141099** ↰ **35-141105** ↱	**24-142342**	with sports suspension HA: disc Brake; thread: M14
B12 PK	**1.2 16V, 1.2 16V Dualfuel, 1.3 CDTI 16V, 1.4, 1.7 DI 16V, 1.7 DTI 16V** 09/00 - 06/06 48 -66 kW	**46-189059**		Conditions see certificates; thread: M10 VA: lowering (expertise): 30 mm; axle load to: 940 kg HA: drum Brake; lowering (expertise): 30 mm; axle load to: 760 kg
B12 PK	**1.2 16V, 1.2 16V Dualfuel, 1.3 CDTI 16V, 1.4, 1.7 DI 16V, 1.7 DTI 16V** 09/00 - 06/06 48 -66 kW	**46-189035**		Conditions see certificates; thread: M14 VA: lowering (expertise): 30 mm; axle load to: 940 kg HA: disc Brake; lowering (expertise): 30 mm; axle load to: 760 kg
B14	**1.2 16V, 1.2 16V Dualfuel, 1.3 CDTI 16V, 1.4, 1.7 DI 16V, 1.7 DTI 16V** 09/00 - 06/06 48 -66 kW	**47-167254**		Conditions see certificates VA: lowering (expertise): 30-50 mm; axle load to: 900 kg HA: lowering (expertise): 20-40 mm; axle load to: 760 kg
VAUXHALL CORSA Mk III				
B1	**1.0, 1.0 i 12V, 1.2, 1.2 i 16V, 1.3 CDTI, 1.4, 1.4 16V, 1.6 SRi, 1.6 Turbo, 1.7 CDTI, 1.7 CDTI 16V** 07/06 - 44 -141 kW	**12-226399**		VA: with ball bearing
B4	**1.0, 1.0 i 12V, 1.2, 1.2 i 16V, 1.3 CDTI, 1.4, 1.4 16V, 1.6 SRi, 1.6 Turbo, 1.7 CDTI, 1.7 CDTI 16V** 07/06 - 44 -141 kW	**22-158475** ↰ **22-158482** ↱	**19-158495**	with standard chassis; with sports suspension
B6 Sport	**1.0, 1.0 i 12V, 1.2, 1.2 i 16V, 1.3 CDTI, 1.4, 1.4 16V, 1.6 SRi, 1.6 Turbo, 1.7 CDTI, 1.7 CDTI 16V** 07/06 - 44 -141 kW	**35-140207** ↰ **35-140214** ↱	**24-140225**	
B8	**1.0, 1.0 i 12V, 1.2, 1.2 i 16V, 1.3 CDTI, 1.4, 1.4 16V, 1.6 SRi, 1.6 Turbo, 1.7 CDTI, 1.7 CDTI 16V** 07/06 - 44 -141 kW	**35-140238** ↰ **35-140245** ↱	**24-140256**	

V

VAUXHALL

VAUXHALL CORSA Mk III

B12 PK	**1.0, 1.0 i 12V, 1.2, 1.2 i 16V, 1.4, 1.4 16V** 07/06 - 44 -74 kW	**46-188144**		Conditions see certificates VA: lowering (expertise): 30 mm; axle load to: 885 kg HA: without ride height adjustment; lowering (expertise): 30 mm; axle load to: 845 kg
B12 PK	**1.3 CDTI, 1.6 SRi, 1.6 Turbo, 1.7 CDTI, 1.7 CDTI 16V** 11/06 - 55 -141 kW	**46-188151**		Conditions see certificates VA: lowering (expertise): 30 mm; axle load to: 1000 kg HA: without ride height adjustment; lowering (expertise): 30 mm; axle load to: 845 kg
B14	**1.0, 1.0 i 12V, 1.2, 1.2 i 16V, 1.3 CDTI, 1.4, 1.4 16V, 1.6 SRi, 1.6 Turbo, 1.7 CDTI, 1.7 CDTI 16V** 07/06 - 44 -141 kW	**47-164499**		VA: Conditions see certificates; lowering (expertise): 35-45 mm; axle load to: 1000 kg HA: lowering (expertise): 30-45 mm; axle load to: 850 kg

VAUXHALL CORSAVAN MK III

B4	**1.2 i 16V, 1.3 CDTI, 1.3 CDTI 16V** 07/06 - 51 -70 kW	**22-158475** **22-158482**	**19-158495**	with standard chassis; with sports suspension
B6 Sport	**1.2 i 16V, 1.3 CDTI, 1.3 CDTI 16V** 07/06 - 51 -70 kW	**35-140207** **35-140214**	**24-140225**	
B8	**1.2 i 16V, 1.3 CDTI, 1.3 CDTI 16V** 07/06 - 51 -70 kW	**35-140238** **35-140245**	**24-140256**	
B12 PK	**1.2 i 16V** 01/10 - 51 kW	**46-188144**		Conditions see certificates VA: lowering (expertise): 30 mm; axle load to: 885 kg HA: without ride height adjustment; lowering (expertise): 30 mm; axle load to: 845 kg
B12 PK	**1.3 CDTI, 1.3 CDTI 16V** 07/06 - 55 -70 kW	**46-188151**		Conditions see certificates VA: lowering (expertise): 30 mm; axle load to: 1000 kg HA: without ride height adjustment; lowering (expertise): 30 mm; axle load to: 845 kg
B14	**1.2 i 16V, 1.3 CDTI, 1.3 CDTI 16V** 07/06 - 51 -70 kW	**47-164499**		VA: Conditions see certificates; lowering (expertise): 35-45 mm; axle load to: 1000 kg HA: lowering (expertise): 30-45 mm; axle load to: 850 kg

VAUXHALL FRONTERA Sport

B4	**2.0 i, 2.5 TDS, 2.8 TD** 03/92 - CH-Nr. 83 -85 kW	**19-028897**	**19-028903**	-> CH.Nr.: SV720102; with leaf-spring suspension
B6 Offroad	**2.0 i, 2.5 TDS, 2.8 TD** 03/92 - CH-Nr. 83 -85 kW	**24-016766**	**24-016773**	-> CH.Nr.: SV720102; with leaf-spring suspension
B6 Offroad	**2.0 i, 2.5 TDS, 2.8 TD** CH-Nr. - 10/98 83 -85 kW	**24-016766**	**24-022989**	CH.Nr.: SV720103 ->; with coil-spring suspension

VAUXHALL FRONTERA

B4	**2.0, 2.2 i, 2.3 TD, 2.4 i, 2.5 TDS, 2.8 TD** 03/95 - CH-Nr. 74 -100 kW	**19-028897**	**19-028903**	-> CH.Nr.: SV720102; with leaf-spring suspension
B6 Offroad	**2.0, 2.2 i, 2.3 TD, 2.4 i, 2.5 TDS, 2.8 TD** 03/95 - CH-Nr. 74 -100 kW	**24-016766**	**24-016773**	-> CH.Nr.: SV720102; with leaf-spring suspension
B6 Offroad	**2.0, 2.2 i, 2.3 TD, 2.4 i, 2.5 TDS, 2.8 TD** CH-Nr. - 10/98 74 -100 kW	**24-016766**	**24-022989**	CH.Nr.: SV720103 ->; with coil-spring suspension

VAUXHALL FRONTERA Mk II

B4	**2.2 DTI, 2.2 i, 3.2 i** 10/98 - 10/04 85 -151 kW	**19-146973**	**19-146980**	
B6 Offroad	**2.2 DTI, 2.2 i, 3.2 i** 11/98 - 10/04 85 -151 kW	**24-028318**	**24-029865**	

BILSTEIN®

VAUXHALL

VAUXHALL INSIGNIA

B4	**1.4, 1.6, 1.6 Turbo, 1.8, 2.0 Biturbo CDTI, 2.0 CDTI, 2.0 CDTI 16V 4x4, 2.0 CDTI 4x4, 2.0 Turbo, 2.0 Turbo 4x4, 2.8 i V6 24V, 2.8 V6 Turbo** 07/08 - 81 -239 kW	**22-183675** **22-183682**	**19-183664**	without FlexRide; with standard chassis
B6 Sport	**1.4, 1.6, 1.6 Turbo, 1.8, 2.0 Biturbo CDTI, 2.0 CDTI, 2.0 CDTI 16V 4x4, 2.0 CDTI 4x4, 2.0 Turbo, 2.0 Turbo 4x4, 2.8 i V6 24V, 2.8 V6 Turbo** 07/08 - 81 -239 kW	**35-167990** **35-168003**	**24-168014**	without FlexRide; with standard chassis
B8	**1.4, 1.6, 1.6 Turbo, 1.8, 2.0 Biturbo CDTI, 2.0 CDTI, 2.0 CDTI 16V 4x4, 2.0 CDTI 4x4, 2.0 Turbo, 2.0 Turbo 4x4, 2.8 i V6 24V, 2.8 V6 Turbo** 07/08 - 81 -239 kW	**35-168027** **35-168034**	**24-168045**	without FlexRide; with sports suspension
B12 PK	**1.4, 1.6, 1.6 Turbo, 2.0 Biturbo CDTI, 2.0 CDTI, 2.0 CDTI 16V 4x4, 2.0 CDTI 4x4, 2.0 Turbo, 2.0 Turbo 4x4, 2.8 i V6 24V, 2.8 V6 Turbo** 07/08 - 81 -239 kW	**46-188793**		without FlexRide; without ride height adjustment; Conditions see certificates VA: lowering (expertise): 30 mm; axle load to: 1160 kg HA: lowering (expertise): 30 mm; axle load to: 1160 kg
B12 PK	**1.8** 07/08 - 103 kW	**46-188786**		without FlexRide; without ride height adjustment; Conditions see certificates VA: lowering (expertise): 30 mm; axle load to: 1030 kg HA: lowering (expertise): 30 mm; axle load to: 1160 kg
B12 PK	**2.0 Biturbo CDTI, 2.0 CDTI, 2.0 CDTI 16V 4x4, 2.0 CDTI 4x4, 2.0 Turbo, 2.0 Turbo 4x4, 2.8 i V6 24V, 2.8 V6 Turbo** 07/08 - 81 -239 kW	**46-188816**		without FlexRide; without ride height adjustment; Conditions see certificates VA: lowering (expertise): 30 mm; axle load to: 1240 kg HA: lowering (expertise): 30 mm; axle load to: 1160 kg

VAUXHALL INSIGNIA Saloon

B4	**1.4, 1.6, 1.6 Turbo, 1.8, 2.0 Biturbo CDTI, 2.0 CDTI, 2.0 CDTI 16V 4x4, 2.0 CDTI 4x4, 2.0 Turbo, 2.0 Turbo 4x4, 2.8 i V6 24V, 2.8 V6 Turbo** 07/08 - 81 -239 kW	**22-183675** **22-183682**	**19-183664**	without FlexRide; with standard chassis
B6 Sport	**1.4, 1.6, 1.6 Turbo, 1.8, 2.0 Biturbo CDTI, 2.0 CDTI, 2.0 CDTI 16V 4x4, 2.0 CDTI 4x4, 2.0 Turbo, 2.0 Turbo 4x4, 2.8 i V6 24V, 2.8 V6 Turbo** 07/08 - 81 -239 kW	**35-167990** **35-168003**	**24-168014**	without FlexRide; with standard chassis
B8	**1.4, 1.6, 1.6 Turbo, 1.8, 2.0 Biturbo CDTI, 2.0 CDTI, 2.0 CDTI 16V 4x4, 2.0 CDTI 4x4, 2.0 Turbo, 2.0 Turbo 4x4, 2.8 i V6 24V, 2.8 V6 Turbo** 07/08 - 81 -239 kW	**35-168027** **35-168034**	**24-168045**	without FlexRide; with sports suspension
B12 PK	**1.4, 1.6, 1.8** 07/08 - 85 -103 kW	**46-188786**		without FlexRide; Conditions see certificates VA: lowering (expertise): 30 mm; axle load to: 1030 kg HA: lowering (expertise): 30 mm; axle load to: 1160 kg
B12 PK	**1.6 Turbo, 2.0 Biturbo CDTI, 2.0 CDTI, 2.0 Turbo** 07/08 - 81 -162 kW	**46-188793**		without FlexRide; without ride height adjustment; Conditions see certificates VA: lowering (expertise): 30 mm; axle load to: 1160 kg HA: lowering (expertise): 30 mm; axle load to: 1160 kg
B12 PK	**2.0 Biturbo CDTI, 2.0 CDTI, 2.0 CDTI 16V 4x4, 2.0 CDTI 4x4, 2.0 Turbo, 2.0 Turbo 4x4, 2.8 i V6 24V, 2.8 V6 Turbo** 07/08 - 81 -239 kW	**46-188816**		without FlexRide; without ride height adjustment; Conditions see certificates VA: lowering (expertise): 30 mm; axle load to: 1240 kg HA: lowering (expertise): 30 mm; axle load to: 1160 kg

VAUXHALL INSIGNIA SPORTS TOURER

B4	**1.4, 1.6, 1.6 Turbo, 1.8, 2.0 Biturbo CDTI, 2.0 Biturbo CDTI 4x4, 2.0 CDTI, 2.0 CDTI 16V 4x4, 2.0 CDTI 4x4, 2.0 Turbo, 2.0 Turbo 4x4, 2.8 i V6 24V, 2.8 V6 Turbo** 08/08 - 81 -239 kW	**22-183675** **22-183682**	**19-183664**	without FlexRide; with standard chassis

V

VAUXHALL				
VAUXHALL INSIGNIA SPORTS TOURER				
B6 Sport	**1.4, 1.6, 1.6 Turbo, 1.8, 2.0 Biturbo CDTI, 2.0 Biturbo CDTI 4x4, 2.0 CDTI, 2.0 CDTI 16V 4x4, 2.0 CDTI 4x4, 2.0 Turbo, 2.0 Turbo 4x4, 2.8 i V6 24V, 2.8 V6 Turbo** 08/08 - 81 -239 kW	**35-167990** **35-168003**	**24-168014**	without FlexRide; with standard chassis
B8	**1.4, 1.6, 1.6 Turbo, 1.8, 2.0 Biturbo CDTI, 2.0 Biturbo CDTI 4x4, 2.0 CDTI, 2.0 CDTI 16V 4x4, 2.0 CDTI 4x4, 2.0 Turbo, 2.0 Turbo 4x4, 2.8 i V6 24V, 2.8 V6 Turbo** 08/08 - 81 -239 kW	**35-168027** **35-168034**	**24-168045**	without FlexRide; with sports suspension
B12 PK	**1.4, 1.6, 1.6 Turbo, 2.0 Biturbo CDTI, 2.0 CDTI, 2.0 Turbo** 07/08 - 81 -162 kW	**46-188830**		without FlexRide; without ride height adjustment; Conditions see certificates VA: lowering (expertise): 30 mm; axle load to: 1160 kg HA: lowering (expertise): 30 mm; axle load to: 1265 kg
B12 PK	**1.8** 07/08 - 103 kW	**46-188823**		without FlexRide; Conditions see certificates VA: lowering (expertise): 30 mm; axle load to: 1030 kg HA: lowering (expertise): 30 mm; axle load to: 1265 kg
B12 PK	**2.0 Turbo 4x4** 07/08 - 162 kW	**46-188847**		without FlexRide; without ride height adjustment; Conditions see certificates VA: lowering (expertise): 30 mm; axle load to: 1160 kg HA: lowering (expertise): 30 mm; axle load to: 1355 kg
B12 PK	**2.0 Biturbo CDTI 4x4, 2.0 CDTI 16V 4x4, 2.0 CDTI 4x4, 2.0 Turbo 4x4, 2.8 i V6 24V, 2.8 V6 Turbo** 08/08 - 118 -239 kW	**46-188854**		without FlexRide; without ride height adjustment; Conditions see certificates VA: lowering (expertise): 30 mm; axle load to: 1240 kg HA: lowering (expertise): 30 mm; axle load to: 1265 kg
VAUXHALL MERIVA				
B1	**1.3 CDTI, 1.4 16V Twinport, 1.6 i, 1.6 i 16V, 1.6 i 16V Twinport, 1.6 Turbo, 1.7 CDTi, 1.7 CDTI 16V, 1.8 i 16V** 01/03 - 55 -132 kW	**12-117376**		VA: Hard Version; without ball bearing
B3	**1.4 16V Twinport, 1.6 i, 1.6 i 16V, 1.6 i 16V Twinport, 1.6 Turbo, 1.8 i 16V** 01/03 - 64 -132 kW	**36-199860**	**36-202140**	with standard chassis
B3	**1.3 CDTI, 1.7 CDTi, 1.7 CDTI 16V** 01/03 - 55 -92 kW	**36-202133**	**36-199853**	with standard chassis
B4	**1.3 CDTI, 1.4 16V Twinport, 1.6 i, 1.6 i 16V, 1.6 i 16V Twinport, 1.6 Turbo, 1.7 CDTi, 1.7 CDTI 16V, 1.8 i 16V** 01/03 - 55 -132 kW	**22-110442** **22-110459**	**19-115351**	
B6 Sport	**1.3 CDTI, 1.4 16V Twinport, 1.6 i, 1.6 i 16V, 1.6 i 16V Twinport, 1.6 Turbo, 1.7 CDTi, 1.7 CDTI 16V, 1.8 i 16V** 01/03 - 55 -132 kW	**35-141068** **35-141075**	**19-148519**	
B8	**1.3 CDTI, 1.4 16V Twinport, 1.6 i, 1.6 i 16V, 1.6 i 16V Twinport, 1.6 Turbo, 1.7 CDTi, 1.7 CDTI 16V, 1.8 i 16V** 01/03 - 55 -132 kW	**35-141099** **35-141105**	**19-148519**	
VAUXHALL MERIVA MK II				
B4	**1.3 CDTI 16V, 1.4 16V, 1.4 16V Turbo, 1.7 CDTi, 1.7 CDTI 16V** 06/10 - 55 -103 kW	**22-213778** **22-213785**	**19-213798**	with standard chassis; with off-road suspension
VAUXHALL MONTEREY				
B4	**3.1 TD, 3.2** 09/91 - 07/98 84 -130 kW	**19-061108**	**19-107141**	
B6 Offroad	**3.1 TD, 3.2** 09/91 - 07/98 84 -130 kW	**24-017381**	**24-017398**	

V

VAUXHALL

VAUXHALL MONTEREY Mk II

B4	**3.0 DTI, 3.5 V6 24V** 07/98 - 08/99 117 -158 kW	**19-061085**	**19-107141**	

VAUXHALL MOVANO Combi (JD)

B4	**1.9 DTI, 2.2 DTI, 2.5 CDTI, 2.5 D, 2.5 DTI, 2.8 DTI, 3.0 DTi** 10/98 - 59 -107 kW	**19-132792**	**19-131689**	

VAUXHALL MOVANO Van (FD)

B4	**1.9 DTI, 2.2 DTI, 2.5 CDTI, 2.5 D, 2.5 DTI, 2.8 TDI, 3.0 DTi** 10/98 - 59 -107 kW	**19-132792**	**19-131689**	

VAUXHALL MOVANO Chassis/Cab (ED, UD, HD)

B4	**2.2 DTI, 2.5 CDTI, 2.5 D, 2.5 DTI, 2.8 DTI, 3.0 DTi** 10/98 - 59 -107 kW	**19-132792**	**19-131702**	

VAUXHALL NOVA

B1	**1.0, 1.2 N, 1.2 S, 1.3 i, 1.3 S, 1.4, 1.4 S, 1.5 D, 1.5 TD** 09/82 - 02/93 33 -60 kW	**11-101314** SP		
B2	**1.0, 1.2 N, 1.2 S, 1.3 i, 1.3 S, 1.4, 1.4 S, 1.5 D, 1.5 TD** 09/82 - 02/93 33 -60 kW	**17-104104**	**15-126191**	
B3	**1.0, 1.2 N, 1.2 S, 1.3 i, 1.3 S, 1.4, 1.4 S, 1.5 D, 1.5 TD** 09/82 - 02/93 33 -60 kW	**36-154531**	**38-161421**	with standard chassis
B3	**1.0, 1.2 N, 1.2 S, 1.3 i, 1.3 S, 1.4, 1.4 S, 1.5 D, 1.5 TD** 09/82 - 02/93 33 -60 kW		**38-120008**	with standard chassis; Heavy Duty Version .
B4	**1.0, 1.2 N, 1.2 S, 1.3 i, 1.3 S, 1.4, 1.4 S, 1.5 D, 1.5 TD** 09/82 - 02/93 33 -60 kW	**22-040909** **11-101314** SP	**19-126203**	
B6 Sport	**1.0, 1.2 N, 1.2 S, 1.3 i, 1.3 S, 1.4, 1.4 S, 1.5 D, 1.5 TD** 09/82 - 02/93 33 -60 kW	**35-040590**	**24-000857**	
B8	**1.0, 1.2 N, 1.2 S, 1.3 i, 1.3 S, 1.4, 1.4 S, 1.5 D, 1.5 TD** 09/82 - 02/93 33 -60 kW	**35-040590**	**24-000857**	
B10	**1.0, 1.2 N, 1.2 S, 1.3 i, 1.3 S, 1.4, 1.4 S, 1.5 D, 1.5 TD** 09/82 - 02/93 33 -60 kW	**46-111951**		Conditions see certificates VA: lowering (expertise): 55 mm; axle load to: 775 kg HA: lowering (expertise): 50 mm; axle load to: 670 kg
B14	**1.0, 1.2 N, 1.2 S, 1.3 i, 1.3 S, 1.4, 1.4 S, 1.5 D, 1.5 TD** 09/82 - 02/93 33 -60 kW	**47-080713**		Conditions see certificates VA: lowering (expertise): 30-50 mm; axle load to: 820 kg HA: lowering (expertise): 20-40 mm; axle load to: 700 kg
B16 PSS9	**1.0, 1.2 N, 1.2 S, 1.3 i, 1.3 S, 1.4, 1.4 S, 1.5 D, 1.5 TD** 09/82 - 02/93 33 -60 kW	**48-080767**		Conditions see certificates VA: lowering (expertise): 30-50 mm; axle load to: 820 kg HA: lowering (expertise): 20-40 mm; axle load to: 700 kg
MS	**1.0, 1.2 N, 1.2 S, 1.3 i, 1.3 S, 1.4, 1.4 S, 1.5 D, 1.5 TD** 09/82 - 02/93 33 -60 kW	*35-041757*	**24-023917**	mark: Rallye VA: charakteristic: 230/80 HA: charakteristic: 200/80
MS	**1.0, 1.2 N, 1.2 S, 1.3 i, 1.3 S, 1.4, 1.4 S, 1.5 D, 1.5 TD** 09/82 - 02/93 33 -60 kW	**35-042136**	**24-023900**	mark: Rennen Gruppe N+G VA: charakteristic: 230/80; rebound: 20 mm HA: charakteristic: 200/80; rebound: 20 mm

V

VAUXHALL				
VAUXHALL NOVA Hatchback				
B2	**1.0, 1.2 i, 1.2 i CAT, 1.2 N, 1.2 S, 1.3 i, 1.3 i CAT, 1.3 S, 1.4 i, 1.4 i S, 1.4 S, 1.5 D, 1.5 TD, 1.6** 05/83 - 03/93 33 -60 kW	**17-104104** **11-101314** *SP*	**15-126191**	
B3	**1.0, 1.2 i, 1.2 i CAT, 1.2 N, 1.2 S, 1.3 i, 1.3 i CAT, 1.3 S, 1.4 i, 1.4 i S, 1.4 S, 1.5 D, 1.5 TD, 1.6** 05/83 - 03/93 33 -60 kW	**36-154531**	**38-161421**	with standard chassis
B3	**1.0, 1.2 i, 1.2 i CAT, 1.2 N, 1.2 S, 1.3 i, 1.3 i CAT, 1.3 S, 1.4 i, 1.4 i S, 1.4 S, 1.5 D, 1.5 TD, 1.6** 05/83 - 03/93 33 -60 kW		**38-120008**	with standard chassis; Heavy Duty Version .
B4	**1.0, 1.2 i, 1.2 i CAT, 1.2 N, 1.2 S, 1.3 i, 1.3 i CAT, 1.3 S, 1.4 i, 1.4 i S, 1.4 S, 1.5 D, 1.5 TD, 1.6** 05/83 - 03/93 33 -60 kW	**22-040909** **11-101314** *SP*	**19-126203**	
B4	**1.6 GSI, 1.6 GSI CAT** 05/88 - 03/93 72 -74 kW	**22-040909** **11-101314** *SP*	**19-019727**	
B6 Sport	**1.0, 1.2 i, 1.2 i CAT, 1.2 N, 1.2 S, 1.3 i, 1.3 i CAT, 1.3 S, 1.4 i, 1.4 i S, 1.4 S, 1.5 D, 1.5 TD, 1.6, 1.6 GSI, 1.6 GSI CAT** 05/83 - 03/93 33 -74 kW	**35-040590**	**24-000857**	
B8	**1.0, 1.2 i, 1.2 i CAT, 1.2 N, 1.2 S, 1.3 i, 1.3 i CAT, 1.3 S, 1.4 i, 1.4 i S, 1.4 S, 1.5 D, 1.5 TD, 1.6, 1.6 GSI, 1.6 GSI CAT** 05/83 - 03/93 33 -74 kW	**35-040590**	**24-000857**	
B10	**1.0, 1.2 i, 1.2 i CAT, 1.2 N, 1.2 S, 1.3 i, 1.3 i CAT, 1.3 S, 1.4 i, 1.4 i S, 1.4 S, 1.5 D, 1.5 TD, 1.6, 1.6 GSI, 1.6 GSI CAT** 05/83 - 03/93 33 -74 kW	**46-111951**		Conditions see certificates VA: lowering (expertise): 55 mm; axle load to: 775 kg HA: lowering (expertise): 55 mm; axle load to: 670 kg
B14	**1.0, 1.2 i, 1.2 i CAT, 1.2 N, 1.2 S, 1.3 i, 1.3 i CAT, 1.3 S, 1.4 i, 1.4 i S, 1.4 S, 1.5 D, 1.5 TD, 1.6, 1.6 GSI, 1.6 GSI CAT** 05/83 - 03/93 33 -74 kW	**47-080713**		Conditions see certificates VA: lowering (expertise): 30-50 mm; axle load to: 820 kg HA: lowering (expertise): 20-40 mm; axle load to: 700 kg
B16 PSS9	**1.0, 1.2 i, 1.2 i CAT, 1.2 N, 1.2 S, 1.3 i, 1.3 i CAT, 1.3 S, 1.4 i, 1.4 i S, 1.4 S, 1.5 D, 1.5 TD, 1.6, 1.6 GSI, 1.6 GSI CAT** 05/83 - 03/93 33 -74 kW	**48-080767**		Conditions see certificates VA: lowering (expertise): 30-50 mm; axle load to: 820 kg HA: lowering (expertise): 20-40 mm; axle load to: 700 kg
MS	**1.0, 1.2 i, 1.2 i CAT, 1.2 N, 1.2 S, 1.3 i, 1.3 i CAT, 1.3 S, 1.4 i, 1.4 i S, 1.4 S, 1.5 D, 1.5 TD, 1.6, 1.6 GSI, 1.6 GSI CAT** 05/83 - 03/93 33 -74 kW	*35-041757*	**24-023917**	mark: Rallye VA: charakteristic: 230/80 HA: charakteristic: 200/80
MS	**1.0, 1.2 i, 1.2 i CAT, 1.2 N, 1.2 S, 1.3 i, 1.3 i CAT, 1.3 S, 1.4 i, 1.4 i S, 1.4 S, 1.5 D, 1.5 TD, 1.6, 1.6 GSI, 1.6 GSI CAT** 05/83 - 03/93 33 -74 kW	**35-042136**	**24-023900**	mark: Rennen Gruppe N+G VA: charakteristic: 230/80; rebound: 20 mm HA: charakteristic: 200/80; rebound: 20 mm
VAUXHALL NOVAVAN				
B2	**1.2, 1.4, 1.5 D** 01/90 - 10/94 37 -55 kW	**17-104104**		
B4	**1.2, 1.4, 1.5 D** 01/90 - 10/94 37 -55 kW	**22-040909** **11-101314** *SP*		

VAUXHALL				
VAUXHALL NOVAVAN				
B6 Sport	**1.2, 1.4, 1.5 D** 01/90 - 10/94 37 -55 kW	**35-040590**	**24-000857**	
B8	**1.2, 1.4, 1.5 D** 01/90 - 10/94 37 -55 kW	**35-040590**	**24-000857**	
VAUXHALL OMEGA				
B3	**2.0, 2.0 16V, 2.0 DTI 16V, 2.5 TD, 2.5 V6, 3.0 V6** 04/94 - 09/98 74 -155 kW	**36-130221** **36-134014**	**38-130205**	with standard chassis
B3	**2.0, 2.0 16V, 2.0 DTI 16V, 2.2 16V, 2.2 DTI 16V, 2.5 DTI 24V, 2.5 TD, 2.5 V6, 2.6 V6, 3.0 V6, 3.2 V6** 04/94 - 03/04 74 -160 kW		**38-130304**	with standard chassis; Heavy Duty Version .
B4	**2.0, 2.0 16V, 2.0 DTI 16V, 2.2 16V, 2.2 DTI 16V, 2.5 DTI 24V, 2.5 TD, 2.5 V6, 2.6 V6, 3.0 V6, 3.2 V6** 04/94 - 03/04 74 -160 kW	**22-044808** **11-122456** *SP*	**19-028613**	without ride height adjustment
B6 Sport	**2.0, 2.0 16V, 2.0 DTI 16V, 2.2 16V, 2.2 DTI 16V, 2.5 DTI 24V, 2.5 TD, 2.5 V6, 2.6 V6, 3.0 V6, 3.2 V6** 04/94 - 03/04 74 -160 kW	**35-044253**	**24-022606**	without ride height adjustment
B8	**2.0, 2.0 16V, 2.0 DTI 16V, 2.2 16V, 2.2 DTI 16V, 2.5 DTI 24V, 2.5 TD, 2.5 V6, 2.6 V6, 3.0 V6, 3.2 V6** 04/94 - 03/04 74 -160 kW	**35-044260**	**24-022583**	without ride height adjustment
B12 PK	**2.0, 2.0 16V, 2.2 16V** 01/94 - 06/03 85 -106 kW	**46-192806**		without ride height adjustment; Conditions see certificates VA: lowering (expertise): 30 mm; axle load to: 990 kg HA: lowering (expertise): 30 mm; axle load to: 1155 kg
B12 PK	**2.0 DTI 16V, 2.2 DTI 16V, 2.5 DTI 24V, 2.5 TD, 2.5 V6, 2.6 V6, 3.0 V6, 3.2 V6** 04/94 - 03/04 74 -160 kW	**46-192813**		without ride height adjustment; Conditions see certificates VA: lowering (expertise): 30 mm; axle load to: 1080 kg HA: lowering (expertise): 30 mm; axle load to: 1155 kg
VAUXHALL OMEGA Estate				
B3	**2.0, 2.0 16V, 2.0 DTI 16V, 2.5 TD, 2.5 V6, 3.0 V6** 03/94 - 09/98 74 -155 kW	**36-134021** **36-134038**	**38-130304**	with standard chassis
B3	**2.0, 2.0 16V, 2.5 TD, 2.5 V6, 3.0 V6** 03/94 - 09/98 85 -155 kW	**36-134045** **36-134489**	**38-130311**	with standard chassis; Heavy Duty Version .
B3	**2.0 DTI 16V, 2.2 DTI 16V, 2.5 DTI 24V, 2.5 TD, 2.5 V6, 2.6 V6, 3.0 V6, 3.2 V6** 10/98 - 03/04 74 -160 kW		**38-130311**	with standard chassis; Heavy Duty Version .
B3	**2.5 TD, 2.5 V6, 3.0 V6** 10/98 - 02/01 96 -155 kW	**36-134045** **36-134489**	**38-130304**	with standard chassis
B4	**2.0, 2.0 16V, 2.0 DTI 16V, 2.2 16V, 2.2 DTI 16V, 2.5 DTI 24V, 2.5 TD, 2.5 V6, 2.6 V6, 3.0 V6, 3.2 V6** 02/94 - 03/04 74 -160 kW	**22-044808** **11-122456** *SP*	**19-028552**	without ride height adjustment
B6 Sport	**2.0, 2.0 16V, 2.0 DTI 16V, 2.2 16V, 2.2 DTI 16V, 2.5 DTI 24V, 2.5 TD, 2.5 V6, 2.6 V6, 3.0 V6, 3.2 V6** 02/94 - 03/04 74 -160 kW	**35-044253**	**24-022590**	without ride height adjustment
B8	**2.0, 2.0 16V, 2.0 DTI 16V, 2.2 16V, 2.2 DTI 16V, 2.5 DTI 24V, 2.5 TD, 2.5 V6, 2.6 V6, 3.0 V6, 3.2 V6** 02/94 - 03/04 74 -160 kW	**35-044260**	**24-022590**	without ride height adjustment

V

VAUXHALL

VAUXHALL OMEGA Estate

B12 PK	**2.0, 2.0 16V, 2.2 16V** 02/94 - 06/03 85 -106 kW	**46-192820**		without ride height adjustment; Conditions see certificates VA: lowering (expertise): 30 mm; axle load to: 990 kg HA: lowering (expertise): 30 mm; axle load to: 1290 kg
B12 PK	**2.0 DTI 16V, 2.2 DTI 16V, 2.5 DTI 24V, 2.5 TD, 2.5 V6, 2.6 V6, 3.0 V6, 3.2 V6** 07/94 - 03/04 74 -160 kW	**46-192837**		without ride height adjustment; Conditions see certificates VA: lowering (expertise): 30 mm; axle load to: 1080 kg HA: lowering (expertise): 30 mm; axle load to: 1290 kg

VAUXHALL SENATOR

B4	**2.5 i, 3.0 i** 09/84 - 08/87 103 -132 kW	*21-030376* **11-101369** SP		
B6 Sport	**2.5 i, 3.0 i** 09/84 - 08/87 103 -132 kW	*34-001417*		VA: Quick Repair Service .; Used part return required .

VAUXHALL SENATOR Mk II

B4	**2.5 i, 2.6 i, 3.0, 3.0 24V, 3.0 i CAT** 09/87 - 09/93 103 -150 kW	**22-031204** **11-122456** SP	**19-020006**	with standard chassis; without electronic suspension control
B6 Sport	**2.5 i, 2.6 i, 3.0, 3.0 24V, 3.0 i CAT** 09/87 - 09/93 103 -150 kW	**35-000945**	**24-011105**	with standard chassis; without electronic suspension control
B8	**2.5 i, 2.6 i, 3.0, 3.0 24V, 3.0 i CAT** 09/87 - 09/93 103 -150 kW	**35-003717**	**24-015288**	with standard chassis; without electronic suspension control

VAUXHALL SIGNUM

B1	**1.8, 1.9 CDTI, 1.9 CDTI 16V, 2.0 DTI, 2.0 i Turbo, 2.2 DTI, 2.2 i, 2.8 V6 Turbo, 3.0 CDTi, 3.0 V6 CDTI, 3.2 V6** 05/03 - 74 -169 kW	**12-224272**		VA: with ball bearing; without sport chassis; without off-road suspension
B3	**1.8, 1.9 CDTI, 1.9 CDTI 16V, 2.0 DTI, 2.0 i Turbo, 2.2 DTI, 2.2 i, 2.8 V6 Turbo, 3.0 CDTi, 3.0 V6 CDTI, 3.2 V6** 05/03 - 74 -169 kW	**37-154608**	**38-154553**	with standard chassis
B3	**1.8, 1.9 CDTI, 1.9 CDTI 16V, 2.0 DTI, 2.0 i Turbo, 2.2 DTI, 2.2 i, 2.8 V6 Turbo, 3.0 CDTi, 3.0 V6 CDTI, 3.2 V6** 05/03 - 74 -169 kW	**37-154585**	**38-163500**	with standard chassis; with ride height adjustment
B3	**1.8, 1.9 CDTI, 1.9 CDTI 16V, 2.0 DTI, 2.0 i Turbo, 2.2 DTI, 2.2 i, 2.8 V6 Turbo, 3.0 CDTi, 3.0 V6 CDTI, 3.2 V6** 05/03 - 74 -169 kW		**38-222412**	with standard chassis; Heavy Duty Version .
B3	**1.8, 1.9 CDTI, 1.9 CDTI 16V, 2.0 DTI, 2.0 i Turbo, 2.2 DTI, 2.2 i, 2.8 V6 Turbo, 3.0 CDTi, 3.0 V6 CDTI, 3.2 V6** 05/03 - 74 -169 kW	**37-163495**	**38-163470**	with sports suspension
B3	**1.8, 1.9 CDTI, 1.9 CDTI 16V, 2.0 DTI, 2.0 i Turbo, 2.2 DTI, 2.2 i, 2.8 V6 Turbo, 3.0 CDTi, 3.0 V6 CDTI, 3.2 V6** 05/03 - 74 -169 kW	**37-154639**		with sports suspension; Heavy Duty Version .
B4	**1.8, 1.9 CDTI, 1.9 CDTI 16V, 2.0 DTI, 2.0 i Turbo, 2.2 DTI, 2.2 i, 3.0 CDTi, 3.2 V6** 05/03 - 09/04 74 -155 kW	**22-118738** **22-118745**	**19-118758**	-> CH.Nr.: 41999999; with standard chassis

V

VAUXHALL

VAUXHALL SIGNUM

B4	**1.8, 1.9 CDTI, 1.9 CDTI 16V, 2.0 DTI, 2.0 i Turbo, 2.2 DTI, 2.2 i, 2.8 V6 Turbo, 3.0 CDTi, 3.0 V6 CDTI, 3.2 V6** 10/04 - 74 -169 kW	**22-168597** **22-168603**	**19-118758**	CH.Nr.: 51000001 ->; with standard chassis; without IDS+ suspension
B6 Sport	**1.8, 1.9 CDTI, 1.9 CDTI 16V, 2.0 DTI, 2.0 i Turbo, 2.2 DTI, 2.2 i, 3.0 CDTi, 3.2 V6** 05/03 - 09/04 74 -155 kW	**35-110651** **35-110668**	**24-069601**	-> CH.Nr.: 41999999; without electronic suspension control
B6 Sport	**1.8, 1.9 CDTI, 1.9 CDTI 16V, 2.0 DTI, 2.0 i Turbo, 2.2 DTI, 2.2 i, 2.8 V6 Turbo, 3.0 CDTi, 3.0 V6 CDTI, 3.2 V6** 10/04 - 74 -169 kW	**35-192954** **35-192961**	**24-069601**	CH.Nr.: 51000001 ->; without IDS+ suspension
B8	**1.8, 1.9 CDTI, 1.9 CDTI 16V, 2.0 DTI, 2.0 i Turbo, 2.2 DTI, 2.2 i, 3.0 CDTi, 3.2 V6** 05/03 - 09/04 74 -155 kW	**35-110675** **35-110682**	**24-069618**	-> CH.Nr.: 41999999; without electronic suspension control
B8	**1.8, 1.9 CDTI, 1.9 CDTI 16V, 2.0 DTI, 2.0 i Turbo, 2.2 DTI, 2.2 i, 2.8 V6 Turbo, 3.0 CDTi, 3.0 V6 CDTI, 3.2 V6** 10/04 - 74 -169 kW	**35-192978** **35-192985**	**24-069618**	CH.Nr.: 51000001 ->; without IDS+ suspension
B12 PK	**1.8, 1.9 CDTI, 1.9 CDTI 16V, 2.0 DTI, 2.0 i Turbo, 2.2 DTI, 2.2 i** 05/03 - 09/04 74 -129 kW	**46-190574**		-> CH.Nr.: 41999999; without electronic suspension control; Conditions see certificates VA: lowering (expertise): 30 mm; axle load to: 1060 kg HA: lowering (expertise): 30 mm; axle load to: 1215 kg
B12 PK	**1.8, 1.9 CDTI, 1.9 CDTI 16V, 2.0 DTI, 2.0 i Turbo, 2.2 DTI, 2.2 i** 10/04 - 74 -129 kW	**46-190604**		CH.Nr.: 51000001 ->; without electronic suspension control; Conditions see certificates VA: lowering (expertise): 30 mm; axle load to: 1060 kg HA: lowering (expertise): 30 mm; axle load to: 1215 kg
B12 PK	**1.9 CDTI, 1.9 CDTI 16V, 2.0 DTI, 2.2 DTI, 3.2 V6** 05/03 - 09/04 74 -155 kW	**46-190581**		-> CH.Nr.: 41999999; without electronic suspension control; Conditions see certificates VA: lowering (expertise): 30 mm; axle load to: 1135 kg HA: lowering (expertise): 30 mm; axle load to: 1215 kg
B12 PK	**1.9 CDTI, 1.9 CDTI 16V, 2.0 DTI, 2.2 DTI, 3.2 V6** 10/04 - 74 -155 kW	**46-190611**		CH.Nr.: 51000001 ->; without electronic suspension control; Conditions see certificates VA: lowering (expertise): 30 mm; axle load to: 1135 kg HA: lowering (expertise): 30 mm; axle load to: 1215 kg
B12 PK	**3.0 V6 CDTI** 04/02 - CH-Nr. 135 kW	**46-190598**		-> CH.Nr.: 41999999; without electronic suspension control; Conditions see certificates VA: lowering (expertise): 30 mm; axle load to: 1230 kg HA: lowering (expertise): 30 mm; axle load to: 1215 kg
B12 PK	**3.0 V6 CDTI** 10/04 - 05/08 135 kW	**46-190628**		CH.Nr.: 51000001 ->; without electronic suspension control; Conditions see certificates VA: lowering (expertise): 30 mm; axle load to: 1230 kg HA: lowering (expertise): 30 mm; axle load to: 1215 kg

VAUXHALL SPEEDSTER (VX220)

B16 PSS10	**2.0** 10/03 - 09/06 162 kW	**48-136723**		Conditions see certificates VA: lowering (expertise): 0-10 mm; axle load to: 485 kg HA: lowering (expertise): 0-20 mm; axle load to: 760 kg

VAUXHALL TIGRA

B1	**1.4 16V, 1.6 16V** 07/94 - 12/00 66 -78 kW	**12-224197**		VA: with ball bearing
B2	**1.4 16V, 1.6 16V** 07/94 - 12/00 66 -78 kW	**17-104104**	**15-126405**	
B3	**1.4 16V, 1.6 16V** 07/94 - 12/00 66 -78 kW	**36-130177**	**38-120008**	with standard chassis
B4	**1.4 16V, 1.6 16V** 07/94 - 12/00 66 -78 kW	**22-040909** **11-101314** SP	**19-126395**	with standard chassis

V

VAUXHALL

VAUXHALL TIGRA

B4	**1.4 16V, 1.6 16V** 07/94 - 12/00 66 -78 kW	**22-040909** **11-101314** SP	**19-019727**	with sports suspension
B6 Sport	**1.4 16V, 1.6 16V** 07/94 - 12/00 66 -78 kW	**35-040590**	**24-000857**	
B8	**1.4 16V, 1.6 16V** 07/94 - 12/00 66 -78 kW	**35-040590**	**24-000857**	
B14	**1.4 16V, 1.6 16V** 07/94 - 12/00 66 -78 kW	**47-080713**		Conditions see certificates VA: lowering (expertise): 30-50 mm HA: lowering (expertise): 30-50 mm
B16 PSS9	**1.4 16V, 1.6 16V** 07/94 - 12/00 66 -78 kW	**48-080767**		Conditions see certificates VA: lowering (expertise): 30-50 mm HA: lowering (expertise): 30-50 mm
MS	**1.4 16V, 1.6 16V** 07/94 - 12/00 66 -78 kW	*35-041757*	**24-023917**	mark: Rallye VA: charakteristic: 230/80 HA: charakteristic: 200/80
MS	**1.4 16V, 1.6 16V** 07/94 - 12/00 66 -78 kW	**35-042136**	**24-023900**	mark: Renen Gruppe N+G VA: charakteristic: 230/80; rebound: 20 mm HA: charakteristic: 200/80; rebound: 20 mm

VAUXHALL TIGRA TwinTop

B1	**1.3 CDTI, 1.4, 1.8** 06/04 - 51 -92 kW	**12-117390**		VA: Soft Version; without ball bearing
B4	**1.3 CDTI, 1.4, 1.8** 06/04 - 51 -92 kW	**22-118714** **22-118721**	**19-108988**	with standard chassis HA: drum Brake; thread: M10
B4	**1.3 CDTI, 1.4, 1.8** 06/04 - 51 -92 kW	**22-118714** **22-118721** **11-101314** SP	**19-108995**	with standard chassis HA: disc Brake; thread: M14
B6 Sport	**1.3 CDTI, 1.4, 1.8** 06/04 - 51 -92 kW	**35-141068** **35-141075**	**24-141086**	with standard chassis HA: drum Brake; thread: M10
B6 Sport	**1.3 CDTI, 1.4, 1.8** 06/04 - 51 -92 kW	**35-141068** **35-141075**	**24-142342**	with sports suspension HA: disc Brake; thread: M14
B8	**1.3 CDTI, 1.4, 1.8** 06/04 - 51 -92 kW	**35-141099** **35-141105**	**24-141116**	with standard chassis HA: drum Brake; thread: M10
B8	**1.3 CDTI, 1.4, 1.8** 06/04 - 51 -92 kW	**35-141099** **35-141105**	**24-142342**	with sports suspension HA: disc Brake; thread: M14
B14	**1.3 CDTI, 1.4, 1.8** 06/04 - 51 -92 kW	**47-167254**		Conditions see certificates VA: lowering (expertise): 30-50 mm; axle load to: 895 kg HA: lowering (expertise): 20-40 mm; axle load to: 680 kg

VAUXHALL VECTRA

B1	**1.6 i, 1.6 i 16V, 1.7 TD, 1.8 i 16V** 08/95 - 55 -92 kW	**12-117390**		VA: Soft Version; without ball bearing
B1	**2.0 DI 16V, 2.0 DTI 16V, 2.0 i 16V, 2.2 DTI 16V, 2.2 i 16V, 2.5 i V6, 2.6 i V6** 08/95 - 03/02 60 -125 kW	**12-117376**		VA: Hard Version; without ball bearing
B3	**1.6 i, 1.6 i 16V** 08/95 - 10/01 55 -74 kW	**36-130146**	**36-130252**	with standard chassis
B3	**1.6 i, 1.6 i 16V** 08/95 - 10/01 55 -74 kW	**36-130153**		with standard chassis; Heavy Duty Version .
B3	**1.6 i, 1.6 i 16V** 08/95 - 10/01 55 -74 kW		**36-162468**	with standard chassis; with ride height adjustment

VAUXHALL				
VAUXHALL VECTRA				
B3	**2.0 i 16V** 10/95 - 01/01 100 kW	**36-130160**	**36-130252**	with standard chassis; without ride height adjustment
B3	**2.0 i 16V** 10/95 - 01/01 100 kW	**36-130214**		with standard chassis; Heavy Duty Version .
B3	**2.0 i 16V** 10/95 - 01/01 100 kW		**36-162468**	with standard chassis; with ride height adjustment
B3	**1.7 TD, 1.8 i 16V** 10/95 - 60 -92 kW	**36-130153**	**36-130252**	with standard chassis; without ride height adjustment
B3	**1.7 TD, 1.8 i 16V** 10/95 - 60 -92 kW	**36-130160**		with standard chassis; Heavy Duty Version .
B3	**1.7 TD, 1.8 i 16V** 10/95 - 60 -92 kW		**36-162468**	with standard chassis; with ride height adjustment
B3	**2.0 DI 16V, 2.0 DTI 16V, 2.5 i GSi, 2.5 i V6, 2.6 i V6** 08/95 - 03/02 60 -143 kW	**36-130214**	**36-130252**	with standard chassis
B3	**2.0 DI 16V, 2.0 DTI 16V, 2.5 i V6, 2.6 i V6** 08/95 - 03/02 60 -125 kW	**36-197880**		with standard chassis; Heavy Duty Version .
B3	**2.0 DI 16V, 2.0 DTI 16V, 2.5 i GSi, 2.5 i V6, 2.6 i V6** 08/95 - 03/02 60 -143 kW		**36-162468**	with standard chassis; with ride height adjustment
B4	**1.6 i, 1.6 i 16V, 1.7 TD, 1.8 i 16V, 2.0 i 16V, 2.5 i V6** 08/95 - 10/01 55 -125 kW	**22-045874** **22-045881**	**19-029344**	HA: -> CH.Nr.: T1086823; -> 12/95
B4	**1.6 i, 1.6 i 16V, 1.7 TD, 1.8 i 16V, 2.0 DI 16V, 2.0 DTI 16V, 2.0 i 16V, 2.2 DTI 16V, 2.2 i 16V, 2.5 i GSi, 2.5 i V6, 2.6 i V6** 08/95 - 03/02 55 -143 kW	**22-045874** **22-045881**	**19-140056**	HA: CH.Nr.: T1086824 ->; 01/96 ->
B6 Sport	**1.6 i, 1.6 i 16V, 1.7 TD, 1.8 i 16V, 2.0 DI 16V, 2.0 DTI 16V, 2.0 i 16V, 2.2 DTI 16V, 2.2 i 16V, 2.5 i GSi, 2.5 i V6, 2.6 i V6** 08/95 - 03/02 55 -143 kW	**35-164432** **35-164449**	**24-025515**	with standard chassis; with off-road suspension HA: without ride height adjustment
B8	**1.6 i, 1.6 i 16V, 1.7 TD, 1.8 i 16V, 2.0 DI 16V, 2.0 DTI 16V, 2.0 i 16V, 2.2 DTI 16V, 2.2 i 16V, 2.5 i GSi, 2.5 i V6, 2.6 i V6** 08/95 - 03/02 55 -143 kW	**35-164456** **35-164463**	**24-025515**	with sports suspension HA: without ride height adjustment
B12 PK	**1.6 i, 1.6 i 16V** 08/95 - 10/01 55 -74 kW	**46-192745**		Conditions see certificates VA: lowering (expertise): 35 mm; axle load to: 975 kg HA: without ride height adjustment; lowering (expertise): 35 mm; axle load to: 945 kg
B12 PK	**1.6 i, 1.6 i 16V, 1.8 i 16V, 2.0 i 16V, 2.2 i 16V, 2.5 i V6** 08/95 - 55 -125 kW	**46-192783**		Conditions see certificates VA: lowering (expertise): 30 mm; axle load to: 870 kg HA: without ride height adjustment; lowering (expertise): 30 mm; axle load to: 945 kg
B12 PK	**2.0 DI 16V, 2.0 DTI 16V, 2.0 i 16V, 2.2 DTI 16V, 2.2 i 16V, 2.5 i V6, 2.6 i V6** 08/95 - 03/02 60 -125 kW	**46-192752**		Conditions see certificates VA: lowering (expertise): 35 mm; axle load to: 1055 kg HA: without ride height adjustment; lowering (expertise): 35 mm; axle load to: 945 kg
VAUXHALL VECTRA Hatchback				
B1	**1.6 i, 1.6 i 16V, 1.7 TD, 1.8 i 16V** 08/95 - 55 -92 kW	**12-117390**		VA: Soft Version; without ball bearing
B1	**1.6 i** 08/95 - 10/01 55 kW	**11-101314** SP		

V

VAUXHALL				
VAUXHALL VECTRA Hatchback				
B1	**2.0 Di 16V, 2.0 DTi 16V, 2.0 i 16V, 2.2 DTI 16V, 2.2 i 16V, 2.5 i V6, 2.6 i V6** 08/95 - 60 -125 kW	**12-117376**		VA: Hard Version; without ball bearing
B3	**1.6 i, 1.6 i 16V** 08/95 - 10/01 55 -74 kW	**36-130146**	**36-130252**	with standard chassis; without ride height adjustment
B3	**1.6 i, 1.6 i 16V** 08/95 - 10/01 55 -74 kW	**36-130153**		with standard chassis; Heavy Duty Version .
B3	**1.6 i, 1.6 i 16V** 08/95 - 10/01 55 -74 kW		**36-162468**	with standard chassis; with ride height adjustment
B3	**2.0 i 16V** 10/95 - 01/01 100 kW	**36-130160**	**36-130252**	with standard chassis; without ride height adjustment
B3	**2.0 i 16V** 10/95 - 01/01 100 kW	**36-130214**		with standard chassis; Heavy Duty Version .
B3	**2.0 i 16V** 10/95 - 01/01 100 kW		**36-162468**	with standard chassis; with ride height adjustment
B3	**1.7 TD, 1.8 i 16V** 10/95 - 60 -92 kW	**36-130153**	**36-130252**	with standard chassis; without ride height adjustment
B3	**1.7 TD, 1.8 i 16V** 10/95 - 60 -92 kW	**36-130160**		with standard chassis; Heavy Duty Version .
B3	**1.7 TD, 1.8 i 16V** 10/95 - 60 -92 kW		**36-162468**	with standard chassis; with ride height adjustment
B3	**2.0 Di 16V, 2.0 DTi 16V, 2.5 i GSi, 2.5 i V6, 2.6 i V6** 08/95 - 60 -143 kW	**36-130214**	**36-130252**	with standard chassis; without ride height adjustment
B3	**2.0 Di 16V, 2.0 DTi 16V, 2.5 i V6, 2.6 i V6** 08/95 - 60 -125 kW		**36-130252**	with standard chassis; Heavy Duty Version .
B3	**2.0 Di 16V, 2.0 DTi 16V, 2.5 i GSi, 2.5 i V6, 2.6 i V6** 08/95 - 60 -143 kW		**36-162468**	with standard chassis; with ride height adjustment
B4	**1.6 i, 1.6 i 16V, 1.7 TD, 1.8 i 16V, 2.0 i 16V, 2.5 i V6** 08/95 - 10/01 55 -125 kW	**22-045874** **22-045881**	**19-029344**	HA: -> CH.Nr.: T1086823; -> 12/95
B4	**1.6 i, 1.6 i 16V, 1.7 TD, 1.8 i 16V, 2.0 Di 16V, 2.0 DTi 16V, 2.0 i 16V, 2.2 DTI 16V, 2.2 i 16V, 2.5 i GSi, 2.5 i V6, 2.6 i V6** 08/95 - 55 -143 kW	**22-045874** **22-045881**	**19-140056**	HA: CH.Nr.: T1086824 ->; 01/96 ->
B6 Sport	**1.6 i, 1.6 i 16V, 1.7 TD, 1.8 i 16V, 2.0 Di 16V, 2.0 DTi 16V, 2.0 i 16V, 2.2 DTI 16V, 2.2 i 16V, 2.5 i GSi, 2.5 i V6, 2.6 i V6** 08/95 - 55 -143 kW	**35-164432** **35-164449**	**24-025515**	with standard chassis; with off-road suspension HA: without ride height adjustment
B8	**1.6 i, 1.6 i 16V, 1.7 TD, 1.8 i 16V, 2.0 Di 16V, 2.0 DTi 16V, 2.0 i 16V, 2.2 DTI 16V, 2.2 i 16V, 2.5 i GSi, 2.5 i V6, 2.6 i V6** 08/95 - 55 -143 kW	**35-164456** **35-164463**	**24-025522**	with sports suspension HA: without ride height adjustment
B12 PK	**1.6 i, 1.6 i 16V** 08/95 - 10/01 55 -74 kW	**46-192745**		Conditions see certificates VA: lowering (expertise): 35 mm; axle load to: 975 kg HA: without ride height adjustment; lowering (expertise): 35 mm; axle load to: 945 kg
B12 PK	**1.6 i, 1.6 i 16V, 1.7 TD, 1.8 i 16V, 2.0 i 16V, 2.2 i 16V, 2.5 i V6** 08/95 - 55 -125 kW	**46-192783**		Conditions see certificates VA: lowering (expertise): 30 mm; axle load to: 870 kg HA: without ride height adjustment; lowering (expertise): 30 mm; axle load to: 945 kg

V

VAUXHALL

VAUXHALL VECTRA Hatchback

B12 PK	**2.0 Di 16V, 2.0 DTi 16V, 2.0 i 16V, 2.2 DTI 16V, 2.2 i 16V, 2.5 i V6, 2.6 i V6** 08/95 - 60 -125 kW	**46-192752**		Conditions see certificates VA: lowering (expertise): 35 mm; axle load to: 1055 kg HA: without ride height adjustment; lowering (expertise): 35 mm; axle load to: 945 kg

VAUXHALL VECTRA Estate

B1	**1.6 i, 1.6 i 16V, 1.8 i 16V** 11/96 - 55 -92 kW	**12-117390**		VA: Soft Version; without ball bearing
B1	**2.0 DI 16V, 2.0 DTI 16V, 2.0 i 16V, 2.2 DTI 16V, 2.2 i 16V, 2.5 i V6, 2.6 i V6** 08/95 - 03/02 60 -125 kW	**12-117376**		VA: Hard Version; without ball bearing
B3	**1.6 i, 1.6 i 16V** 11/96 - 55 -74 kW	**36-130146**	**36-130269**	with standard chassis; without ride height adjustment
B3	**1.6 i, 1.6 i 16V** 11/96 - 55 -74 kW	**36-130153**		with standard chassis; Heavy Duty Version .
B3	**1.6 i, 1.6 i 16V** 11/96 - 55 -74 kW		**36-162451**	with standard chassis; with ride height adjustment
B3	**1.8 i 16V** 11/96 - 85 -92 kW	**36-130153**	**36-130269**	with standard chassis; without ride height adjustment
B3	**1.8 i 16V** 11/96 - 85 -92 kW	**36-130160**		with standard chassis; Heavy Duty Version .
B3	**1.8 i 16V** 11/96 - 85 -92 kW		**36-162451**	with standard chassis; with ride height adjustment
B3	**2.0 i 16V** 10/95 - 01/01 100 kW	**36-130160**	**36-130269**	with standard chassis; without ride height adjustment
B3	**2.0 i 16V** 10/95 - 01/01 100 kW	**36-130214**		with standard chassis; Heavy Duty Version .
B3	**2.0 i 16V** 10/95 - 01/01 100 kW		**36-162451**	with standard chassis; with ride height adjustment
B3	**2.0 DI 16V, 2.0 DTI 16V, 2.5 i V6, 2.6 i V6** 08/95 - 03/02 60 -125 kW	**36-130214**	**36-130269**	with standard chassis; without ride height adjustment
B3	**2.0 DI 16V, 2.0 DTI 16V, 2.5 i V6, 2.6 i V6** 08/95 - 03/02 60 -125 kW	**36-197880**		with standard chassis; Heavy Duty Version .
B3	**2.0 DI 16V, 2.0 DTI 16V, 2.5 i V6, 2.6 i V6** 08/95 - 03/02 60 -125 kW		**36-162451**	with standard chassis; with ride height adjustment
B4	**1.6 i, 1.6 i 16V, 1.8 i 16V, 2.0 DI 16V, 2.0 DTI 16V, 2.0 i 16V, 2.2 DTI 16V, 2.2 i 16V, 2.5 i GSi, 2.5 i V6, 2.6 i V6** 08/95 - 55 -143 kW	**22-045874** **22-045881**	**19-140056**	without ride height adjustment HA: CH.Nr.: T1086824 ->; 01/96 ->
B6 Sport	**1.6 i, 1.6 i 16V, 1.8 i 16V, 2.0 DI 16V, 2.0 DTI 16V, 2.0 i 16V, 2.2 DTI 16V, 2.2 i 16V, 2.5 i V6, 2.6 i V6** 08/95 - 55 -125 kW	**35-164432** **35-164449**	**24-025515**	
B8	**1.6 i, 1.6 i 16V, 1.8 i 16V, 2.0 DI 16V, 2.0 DTI 16V, 2.0 i 16V, 2.2 DTI 16V, 2.2 i 16V, 2.5 i GSi, 2.5 i V6, 2.6 i V6** 08/95 - 55 -143 kW	**35-164456** **35-164463**	**24-025515**	
B12 PK	**1.6 i, 1.6 i 16V** 11/96 - 55 -74 kW	**46-192783**		Conditions see certificates VA: lowering (expertise): 30 mm; axle load to: 870 kg HA: without ride height adjustment; lowering (expertise): 30 mm; axle load to: 1025 kg

V

VAUXHALL

VAUXHALL VECTRA Estate

B12 PK	**1.6 i, 1.6 i 16V, 1.8 i 16V, 2.0 i 16V, 2.2 i 16V, 2.5 i V6** 08/95 - 55 -125 kW	**46-192769**		Conditions see certificates VA: lowering (expertise): 30 mm; axle load to: 975 kg HA: without ride height adjustment; lowering (expertise): 30 mm; axle load to: 1025 kg
B12 PK	**2.0 DI 16V, 2.0 DTI 16V, 2.0 i 16V, 2.2 DTI 16V, 2.2 i 16V, 2.5 i V6, 2.6 i V6** 08/95 - 03/02 60 -125 kW	**46-192776**		Conditions see certificates VA: lowering (expertise): 30 mm; axle load to: 1055 kg HA: without ride height adjustment; lowering (expertise): 30 mm; axle load to: 1025 kg

VAUXHALL VECTRA Mk II GTS

B1	**1.6, 1.6 16V, 1.8, 1.8 16V, 1.8 16V Dualfuel, 1.9 CDTI, 1.9 CDTI 16V, 2.0 16V Turbo, 2.0 DTI 16V, 2.2 16V, 2.2 direct, 2.2 DTI 16V, 2.8 V6 Turbo, 3.0 CDTi, 3.0 V6 CDTI, 3.2 V6** 08/02 - 07/08 74 -188 kW	**12-224272**		VA: with ball bearing; without sport chassis; without off-road suspension
B3	**1.6, 1.6 16V, 1.8, 1.8 16V, 1.8 16V Dualfuel, 1.9 CDTI, 1.9 CDTI 16V, 2.0 16V Turbo, 2.0 DTI 16V, 2.2 16V, 2.2 direct, 2.2 DTI 16V, 3.0 CDTi, 3.0 V6 CDTI, 3.2 V6** 08/02 - 07/08 74 -155 kW	**37-154578**	**38-154546**	with standard chassis; manual transmission
B3	**1.6, 1.6 16V, 1.8, 1.8 16V, 1.8 16V Dualfuel, 1.9 CDTI, 1.9 CDTI 16V, 2.0 16V Turbo, 2.0 DTI 16V, 2.2 16V, 2.2 direct, 2.2 DTI 16V, 3.0 CDTi, 3.0 V6 CDTI, 3.2 V6** 08/02 - 07/08 74 -155 kW	**37-154578**		with standard chassis; with ride height adjustment; manual transmission
B3	**1.6, 1.6 16V, 1.8, 1.8 16V, 1.8 16V Dualfuel, 1.9 CDTI, 1.9 CDTI 16V, 2.0 16V Turbo, 2.0 DTI 16V, 2.2 16V, 2.2 direct, 2.2 DTI 16V, 3.0 CDTi, 3.0 V6 CDTI, 3.2 V6** 08/02 - 07/08 74 -155 kW	**37-154592**	**38-154553**	with standard chassis; Heavy Duty Version .; manual transmission
B3	**1.8, 1.8 16V, 1.8 16V Dualfuel** 08/02 - 07/08 90 -103 kW	**37-154585**	**38-154546**	with standard chassis; automatic transmission
B3	**1.8, 1.8 16V, 1.8 16V Dualfuel** 08/02 - 07/08 90 -103 kW	**37-154585**		with standard chassis; with ride height adjustment; automatic transmission
B3	**1.8, 1.8 16V, 1.8 16V Dualfuel** 08/02 - 07/08 90 -103 kW	**37-154608**	**38-154553**	with standard chassis; Heavy Duty Version .; automatic transmission
B4	**1.6 16V, 1.8 16V, 1.8 16V Dualfuel, 1.9 CDTI, 1.9 CDTI 16V, 2.0 16V Turbo, 2.0 DTI 16V, 2.2 16V, 2.2 direct, 2.2 DTI 16V, 3.0 V6 CDTI, 3.2 V6** 08/02 - 09/04 74 -155 kW	**22-118738** **22-118745**	**19-118758** OIO	-> CH.Nr.: 41999999; with standard chassis; without IDS+ suspension
B4	**1.6, 1.6 16V, 1.8, 1.8 16V, 1.8 16V Dualfuel, 1.9 CDTI, 1.9 CDTI 16V, 2.0 16V Turbo, 2.0 DTI 16V, 2.2 16V, 2.2 direct, 2.2 DTI 16V, 2.8 V6 Turbo, 3.0 CDTi, 3.0 V6 CDTI, 3.2 V6** 10/04 - 07/08 74 -188 kW	**22-168597** **22-168603**	**19-118758** OIO	CH.Nr.: 51000001 ->; with standard chassis; without IDS+ suspension
B6 Sport	**1.6 16V, 1.8 16V, 1.8 16V Dualfuel, 1.9 CDTI, 1.9 CDTI 16V, 2.0 16V Turbo, 2.0 DTI 16V, 2.2 16V, 2.2 direct, 2.2 DTI 16V, 3.0 V6 CDTI, 3.2 V6** 08/02 - 09/04 74 -155 kW	**35-110651** **35-110668**	**24-069601** OIO	-> CH.Nr.: 41999999; without IDS+ suspension
B6 Sport	**1.6, 1.6 16V, 1.8, 1.8 16V, 1.8 16V Dualfuel, 1.9 CDTI, 1.9 CDTI 16V, 2.0 16V Turbo, 2.0 DTI 16V, 2.2 16V, 2.2 direct, 2.2 DTI 16V, 2.8 V6 Turbo, 3.0 CDTi, 3.0 V6 CDTI, 3.2 V6** 10/04 - 07/08 74 -188 kW	**35-192954** **35-192961**	**24-069601** OIO	CH.Nr.: 51000001 ->; without IDS+ suspension

V

VAUXHALL				
VAUXHALL VECTRA Mk II GTS				
B8	**1.6 16V, 1.8 16V, 1.8 16V Dualfuel, 1.9 CDTI, 1.9 CDTI 16V, 2.0 16V Turbo, 2.0 DTI 16V, 2.2 16V, 2.2 direct, 2.2 DTI 16V, 3.0 V6 CDTI, 3.2 V6** 08/02 - 09/04 74 -155 kW	**35-110675** **35-110682**	**24-069618**	-> CH.Nr.: 41999999; without IDS+ suspension
B8	**1.6, 1.6 16V, 1.8, 1.8 16V, 1.8 16V Dualfuel, 1.9 CDTI, 1.9 CDTI 16V, 2.0 16V Turbo, 2.0 DTI 16V, 2.2 16V, 2.2 direct, 2.2 DTI 16V, 2.8 V6 Turbo, 3.0 CDTi, 3.0 V6 CDTI, 3.2 V6** 10/04 - 07/08 74 -188 kW	**35-192978** **35-192985**	**24-069618**	CH.Nr.: 51000001 ->; without IDS+ suspension
B12 PK	**1.6 16V, 1.8 16V, 1.8 16V Dualfuel** 08/02 - 09/04 74 -90 kW	**46-190550**		-> CH.Nr.: 41999999; without IDS+ suspension; Conditions see certificates VA: lowering (expertise): 30 mm; axle load to: 965 kg HA: lowering (expertise): 30 mm; axle load to: 1035 kg
B12 PK	**1.6, 1.8, 1.8 16V, 1.9 CDTI, 1.9 CDTI 16V, 2.0 16V Turbo, 2.0 DTI 16V, 2.2 16V, 2.2 direct, 2.2 DTI 16V, 3.2 V6** 10/04 - 07/08 74 -155 kW	**46-194060**		CH.Nr.: 51000001 ->; without IDS+ suspension; Conditions see certificates VA: lowering (expertise): 30 mm; axle load to: 1060 kg HA: lowering (expertise): 30 mm; axle load to: 1035 kg
B12 PK	**1.6, 1.6 16V, 1.8, 1.8 16V** 10/04 - 07/08 74 -103 kW	**46-194077**		CH.Nr.: 51000001 ->; without IDS+ suspension; Conditions see certificates VA: lowering (expertise): 30 mm; axle load to: 965 kg HA: lowering (expertise): 30 mm; axle load to: 1035 kg
B12 PK	**1.8 16V, 1.8 16V Dualfuel, 1.9 CDTI, 1.9 CDTI 16V, 2.0 16V Turbo, 2.0 DTI 16V, 2.2 16V, 2.2 direct, 2.2 DTI 16V, 3.2 V6** 08/02 - 09/04 74 -155 kW	**46-190536**		-> CH.Nr.: 41999999; without IDS+ suspension; Conditions see certificates VA: lowering (expertise): 30 mm; axle load to: 1060 kg HA: lowering (expertise): 30 mm; axle load to: 1035 kg
B12 PK	**1.9 CDTI, 1.9 CDTI 16V, 2.0 16V Turbo, 2.0 DTI 16V, 2.2 16V, 2.2 direct, 2.2 DTI 16V, 3.2 V6** 10/04 - 07/08 74 -155 kW	**46-194008**		CH.Nr.: 51000001 ->; without IDS+ suspension; Conditions see certificates VA: lowering (expertise): 30 mm; axle load to: 1135 kg HA: lowering (expertise): 30 mm; axle load to: 1035 kg
B12 PK	**1.9 CDTI, 1.9 CDTI 16V, 2.0 16V Turbo, 2.0 DTI 16V, 2.2 16V, 2.2 direct, 2.2 DTI 16V, 3.2 V6** 08/02 - 09/04 74 -155 kW	**46-190543**		-> CH.Nr.: 41999999; without IDS+ suspension; Conditions see certificates VA: lowering (expertise): 30 mm; axle load to: 1135 kg HA: lowering (expertise): 30 mm; axle load to: 1035 kg
B12 PK	**3.0 V6 CDTI** 06/03 - 09/04 130 kW	**46-190567**		-> CH.Nr.: 41999999; without IDS+ suspension; Conditions see certificates VA: lowering (expertise): 30 mm; axle load to: 1230 kg HA: lowering (expertise): 30 mm; axle load to: 1035 kg
B12 PK	**3.0 CDTi** 08/05 - CH-Nr. 135 kW	**46-190567**		-> CH.Nr.: 41999999; without IDS+ suspension; Conditions see certificates VA: lowering (expertise): 30 mm; axle load to: 1230 kg HA: lowering (expertise): 30 mm; axle load to: 1035 kg
B12 PK	**3.0 CDTi** 10/04 - 07/08 135 kW	**46-194084**		CH.Nr.: 51000001 ->; without IDS+ suspension; Conditions see certificates VA: lowering (expertise): 30 mm; axle load to: 1135 kg HA: lowering (expertise): 30 mm; axle load to: 1035 kg
VAUXHALL VECTRA Mk II				
B1	**1.6, 1.6 16V, 1.8, 1.8 16V, 1.8 16V Dualfuel, 1.9 CDTI, 1.9 CDTI 16V, 2.0 16V Turbo, 2.0 DTI 16V, 2.2 16V, 2.2 direct, 2.2 DTI 16V, 2.8 V6 Turbo, 3.0 CDTi, 3.0 V6 CDTI, 3.2 V6** 06/03 - 08/08 74 -206 kW	**12-224272**		VA: with ball bearing; without sport chassis; without off-road suspension
B3	**1.6, 1.6 16V, 1.8, 1.8 16V, 1.8 16V Dualfuel, 1.9 CDTI, 1.9 CDTI 16V, 2.0 16V Turbo, 2.0 DTI 16V, 2.2 16V, 2.2 direct, 2.2 DTI 16V, 3.2 V6** 06/03 - 74 -155 kW	**37-154578**	**38-154546**	with standard chassis; manual transmission
B3	**1.6, 1.6 16V, 1.8, 1.8 16V, 1.8 16V Dualfuel, 1.9 CDTI, 1.9 CDTI 16V, 2.0 16V Turbo, 2.0 DTI 16V, 2.2 16V, 2.2 direct, 2.2 DTI 16V, 3.0 CDTi, 3.0 V6 CDTI, 3.2 V6** 06/03 - 74 -155 kW	**37-154592**	**38-154553**	with standard chassis; Heavy Duty Version .; manual transmission

VAUXHALL

VAUXHALL VECTRA Mk II

B3	**1.6, 1.6 16V, 1.8, 1.8 16V, 1.8 16V Dualfuel, 1.9 CDTI, 1.9 CDTI 16V, 2.0 16V Turbo, 2.0 DTI 16V, 2.2 16V, 2.2 direct, 2.2 DTI 16V, 3.0 CDTi, 3.0 V6 CDTI, 3.2 V6** 06/03 - 74 -155 kW	**37-154578**		with standard chassis; with ride height adjustment; manual transmission
B3	**1.8, 1.8 16V, 1.8 16V Dualfuel** 04/02 - 07/08 81 -103 kW	**37-154585**	**38-154546**	with standard chassis; automatic transmission
B3	**1.8, 1.8 16V, 1.8 16V Dualfuel** 04/02 - 07/08 81 -103 kW	**37-154608**	**38-154553**	with standard chassis; Heavy Duty Version .; automatic transmission
B3	**1.8, 1.8 16V, 1.8 16V Dualfuel** 04/02 - 07/08 81 -103 kW	**37-154585**		with standard chassis; with ride height adjustment; automatic transmission
B3	**3.0 V6 CDTI** 06/03 - 08/05 130 kW	**37-154578**	**38-154546**	with standard chassis; manual transmission
B3	**3.0 CDTi** 08/05 - 07/08 135 kW	**37-154578**	**38-154546**	with standard chassis; manual transmission
B4	**1.6 16V, 1.8, 1.8 16V, 1.8 16V Dualfuel, 1.9 CDTI, 1.9 CDTI 16V, 2.0 16V Turbo, 2.0 DTI 16V, 2.2 16V, 2.2 direct, 2.2 DTI 16V, 3.0 V6 CDTI, 3.2 V6** 06/03 - 09/04 74 -155 kW	**22-118738** **22-118745**	**19-118758** OIO	-> CH.Nr.: 48999999; with standard chassis; without IDS+ suspension
B4	**1.6, 1.6 16V, 1.8, 1.8 16V, 1.8 16V Dualfuel, 1.9 CDTI, 1.9 CDTI 16V, 2.0 16V Turbo, 2.0 DTI 16V, 2.2 16V, 2.2 direct, 2.2 DTI 16V, 2.8 V6 Turbo, 3.0 CDTi, 3.0 V6 CDTI, 3.2 V6** 10/04 - 08/08 74 -206 kW	**22-168597** **22-168603**	**19-118758** OIO	CH.Nr.: 51000001 ->; with standard chassis; without IDS+ suspension
B6 Sport	**1.6 16V, 1.8, 1.8 16V, 1.8 16V Dualfuel, 1.9 CDTI, 1.9 CDTI 16V, 2.0 16V Turbo, 2.0 DTI 16V, 2.2 16V, 2.2 direct, 2.2 DTI 16V, 3.0 V6 CDTI, 3.2 V6** 06/03 - 09/04 74 -155 kW	**35-110651** **35-110668**	**24-069601** OIO	-> CH.Nr.: 48999999; without IDS+ suspension
B6 Sport	**1.6, 1.6 16V, 1.8, 1.8 16V, 1.8 16V Dualfuel, 1.9 CDTI, 1.9 CDTI 16V, 2.0 16V Turbo, 2.0 DTI 16V, 2.2 16V, 2.2 direct, 2.2 DTI 16V, 2.8 V6 Turbo, 3.0 CDTi, 3.0 V6 CDTI, 3.2 V6** 10/04 - 08/08 74 -206 kW	**35-192954** **35-192961**	**24-069601** OIO	CH.Nr.: 51000001 ->; without IDS+ suspension
B8	**1.6 16V, 1.8, 1.8 16V, 1.8 16V Dualfuel, 1.9 CDTI, 1.9 CDTI 16V, 2.0 16V Turbo, 2.0 DTI 16V, 2.2 16V, 2.2 direct, 2.2 DTI 16V, 3.0 V6 CDTI, 3.2 V6** 06/03 - 09/04 74 -155 kW	**35-110675** **35-110682**	**24-069618** OIO	-> CH.Nr.: 48999999; without IDS+ suspension
B8	**1.6, 1.6 16V, 1.8, 1.8 16V, 1.8 16V Dualfuel, 1.9 CDTI, 1.9 CDTI 16V, 2.0 16V Turbo, 2.0 DTI 16V, 2.2 16V, 2.2 direct, 2.2 DTI 16V, 2.8 V6 Turbo, 3.0 CDTi, 3.0 V6 CDTI, 3.2 V6** 10/04 - 08/08 74 -206 kW	**35-192978** **35-192985**	**24-069618** OIO	CH.Nr.: 51000001 ->; without IDS+ suspension
B12 PK	**1.6 16V, 1.8, 1.8 16V, 1.8 16V Dualfuel** 04/02 - 09/04 74 -90 kW	**46-190550**		-> CH.Nr.: 48999999; without IDS+ suspension; Conditions see certificates VA: lowering (expertise): 30 mm; axle load to: 965 kg HA: lowering (expertise): 30 mm; axle load to: 1035 kg
B12 PK	**1.6, 1.6 16V, 1.8, 1.8 16V** 10/04 - 07/08 74 -103 kW	**46-194077**		CH.Nr.: 51000001 ->; without IDS+ suspension; Conditions see certificates VA: lowering (expertise): 30 mm; axle load to: 965 kg HA: lowering (expertise): 30 mm; axle load to: 1035 kg
B12 PK	**1.8, 1.8 16V Dualfuel, 1.9 CDTI, 1.9 CDTI 16V, 2.0 16V Turbo, 2.0 DTI 16V, 2.2 16V, 2.2 direct, 2.2 DTI 16V, 3.2 V6** 01/02 - 09/04 74 -155 kW	**46-190536**		-> CH.Nr.: 48999999; without IDS+ suspension; Conditions see certificates VA: lowering (expertise): 30 mm; axle load to: 1060 kg HA: lowering (expertise): 30 mm; axle load to: 1035 kg

VAUXHALL

VAUXHALL VECTRA Mk II

B12 PK	**1.8, 1.8 16V, 1.9 CDTI, 1.9 CDTI 16V, 2.0 16V Turbo, 2.0 DTI 16V, 2.2 16V, 2.2 direct, 2.2 DTI 16V, 3.2 V6** 10/04 - 74 -155 kW	**46-194060**		CH.Nr.: 51000001 ->; without IDS+ suspension; Conditions see certificates VA: lowering (expertise): 30 mm; axle load to: 1060 kg HA: lowering (expertise): 30 mm; axle load to: 1035 kg
B12 PK	**1.9 CDTI, 1.9 CDTI 16V, 2.0 DTI 16V, 2.2 DTI 16V, 3.2 V6** 10/04 - 74 -155 kW	**46-194008**		CH.Nr.: 51000001 ->; without IDS+ suspension; Conditions see certificates VA: lowering (expertise): 30 mm; axle load to: 1135 kg HA: lowering (expertise): 30 mm; axle load to: 1035 kg
B12 PK	**1.9 CDTI, 1.9 CDTI 16V, 2.0 16V Turbo, 2.0 DTI 16V, 2.2 16V, 2.2 DTI 16V, 3.2 V6** 06/03 - 09/04 74 -155 kW	**46-190543**		-> CH.Nr.: 48999999; without IDS+ suspension; Conditions see certificates VA: lowering (expertise): 30 mm; axle load to: 1135 kg HA: lowering (expertise): 30 mm; axle load to: 1035 kg
B12 PK	**3.0 V6 CDTI** 06/03 - 09/04 130 kW	**46-190567**		-> CH.Nr.: 48999999; without IDS+ suspension; Conditions see certificates VA: lowering (expertise): 30 mm; axle load to: 1230 kg HA: lowering (expertise): 30 mm; axle load to: 1035 kg
B12 PK	**3.0 CDTi** CH-Nr. - 07/08 135 kW	**46-190567**		CH.Nr.: 48999999 ->; without IDS+ suspension; Conditions see certificates VA: lowering (expertise): 30 mm; axle load to: 1230 kg HA: lowering (expertise): 30 mm; axle load to: 1035 kg
B12 PK	**3.0 CDTi** 10/04 - 07/08 135 kW	**46-194084**		CH.Nr.: 51000001 ->; without IDS+ suspension; Conditions see certificates VA: lowering (expertise): 30 mm; axle load to: 1230 kg HA: lowering (expertise): 30 mm; axle load to: 1035 kg

VAUXHALL VECTRA Mk II Estate

B1	**1.6 16V, 1.8, 1.8 16V, 1.9 CDTI, 1.9 CDTI 16V, 2.0 16V Turbo, 2.0 DTI 16V, 2.2 direct, 2.2 DTI 16V, 2.8 V6 Turbo, 3.0 CDTi, 3.0 V6 CDTI, 3.2 V6** 10/03 - 07/08 74 -206 kW	**12-224272**		VA: with ball bearing; without sport chassis; without off-road suspension
B3	**1.6 16V, 1.9 CDTI, 1.9 CDTI 16V, 2.0 16V Turbo, 2.0 DTI 16V, 2.2 direct, 2.2 DTI 16V, 3.0 CDTi, 3.0 V6 CDTI, 3.2 V6** 10/03 - 07/08 74 -155 kW	**37-154578**	**38-163456**	with standard chassis
B3	**1.6 16V, 1.9 CDTI, 1.9 CDTI 16V, 2.0 16V Turbo, 2.0 DTI 16V, 2.2 direct, 2.2 DTI 16V, 3.0 CDTi, 3.0 V6 CDTI, 3.2 V6** 10/03 - 07/08 74 -155 kW	**37-163433**	**38-163425**	with sports suspension
B3	**1.6 16V, 1.9 CDTI, 1.9 CDTI 16V, 2.0 16V Turbo, 2.0 DTI 16V, 2.2 direct, 2.2 DTI 16V, 3.0 CDTi, 3.0 V6 CDTI, 3.2 V6** 10/03 - 07/08 74 -155 kW	**37-154592**	**38-222412**	with standard chassis; Heavy Duty Version .
B3	**1.6 16V, 1.9 CDTI, 1.9 CDTI 16V, 2.0 16V Turbo, 2.0 DTI 16V, 2.2 direct, 2.2 DTI 16V, 3.2 V6** 10/03 - 07/08 74 -155 kW	**37-154622**		with sports suspension; Heavy Duty Version .
B3	**1.8, 1.8 16V** 10/03 - 07/08 90 -103 kW	**37-154578**	**38-163456**	with standard chassis; manual transmission
B3	**1.8, 1.8 16V** 10/03 - 07/08 90 -103 kW	**37-154585**	**38-163456**	with standard chassis; automatic transmission
B3	**1.8, 1.8 16V** 10/03 - 07/08 90 -103 kW	**37-163433**	**38-163425**	with sports suspension; manual transmission
B3	**1.8, 1.8 16V** 10/03 - 07/08 90 -103 kW	**37-163495**	**38-163425**	with sports suspension; automatic transmission
B3	**1.8, 1.8 16V** 10/03 - 07/08 90 -103 kW	**37-154592**	**38-222412**	with standard chassis; Heavy Duty Version .; manual transmission

V

VAUXHALL

VAUXHALL VECTRA Mk II Estate

B3	**1.8, 1.8 16V** 10/03 - 07/08 90 -103 kW	**37-154608**	**38-222412**	with standard chassis; Heavy Duty Version .; automatic transmission
B3	**1.8, 1.8 16V** 10/03 - 07/08 90 -103 kW	**37-154622**		with sports suspension; Heavy Duty Version .; manual transmission
B3	**1.8, 1.8 16V** 10/03 - 07/08 90 -103 kW	**37-154639**		with sports suspension; Heavy Duty Version .; automatic transmission
B4	**1.6 16V, 1.8 16V, 1.9 CDTI, 1.9 CDTI 16V, 2.0 16V Turbo, 2.0 DTI 16V, 2.2 direct, 2.2 DTI 16V, 3.0 V6 CDTI, 3.2 V6** 10/03 - 09/04 74 -155 kW	**22-118738** **22-118745**	**19-118758** OIO	-> CH.Nr.: 41999999; with standard chassis; without IDS+ suspension
B4	**1.6 16V, 1.8, 1.8 16V, 1.9 CDTI, 1.9 CDTI 16V, 2.0 16V Turbo, 2.0 DTI 16V, 2.2 direct, 2.2 DTI 16V, 2.8 V6 Turbo, 3.0 CDTi, 3.0 V6 CDTI, 3.2 V6** 10/04 - 07/08 74 -206 kW	**22-168597** **22-168603**	**19-118758** OIO	CH.Nr.: 51000001 ->; with standard chassis; without IDS+ suspension
B6 Sport	**1.6 16V, 1.8 16V, 1.9 CDTI, 1.9 CDTI 16V, 2.0 16V Turbo, 2.0 DTI 16V, 2.2 direct, 2.2 DTI 16V, 3.0 V6 CDTI, 3.2 V6** 10/03 - 09/04 74 -155 kW	**35-110651** **35-110668**	**24-069601** OIO	-> CH.Nr.: 41999999; without IDS+ suspension
B6 Sport	**1.6 16V, 1.8, 1.8 16V, 1.9 CDTI, 1.9 CDTI 16V, 2.0 16V Turbo, 2.0 DTI 16V, 2.2 direct, 2.2 DTI 16V, 2.8 V6 Turbo, 3.0 CDTi, 3.0 V6 CDTI, 3.2 V6** 10/04 - 07/08 74 -206 kW	**35-192954** **35-192961**	**24-069601** OIO	CH.Nr.: 51000001 ->; without IDS+ suspension
B8	**1.6 16V, 1.8 16V, 1.9 CDTI, 1.9 CDTI 16V, 2.0 16V Turbo, 2.0 DTI 16V, 2.2 direct, 2.2 DTI 16V, 3.0 V6 CDTI, 3.2 V6** 10/03 - 09/04 74 -155 kW	**35-110675** **35-110682**	**24-069618** OIO	-> CH.Nr.: 41999999; without IDS+ suspension
B8	**1.6 16V, 1.8, 1.8 16V, 1.9 CDTI, 1.9 CDTI 16V, 2.0 16V Turbo, 2.0 DTI 16V, 2.2 direct, 2.2 DTI 16V, 2.8 V6 Turbo, 3.0 CDTi, 3.0 V6 CDTI, 3.2 V6** 10/04 - 07/08 74 -206 kW	**35-192978** **35-192985**	**24-069618** OIO	CH.Nr.: 51000001 ->; without IDS+ suspension
B12 PK	**1.6 16V, 1.8 16V, 1.9 CDTI, 1.9 CDTI 16V, 2.0 16V Turbo, 2.0 DTI 16V, 2.2 direct, 2.2 DTI 16V, 3.2 V6** 10/03 - 09/04 74 -155 kW	**46-190574**		-> CH.Nr.: 41999999; without IDS+ suspension; Conditions see certificates VA: lowering (expertise): 30 mm; axle load to: 1060 kg HA: without ride height adjustment; lowering (expertise): 30 mm; axle load to: 1215 kg
B12 PK	**1.6 16V, 1.8, 1.8 16V, 1.9 CDTI, 1.9 CDTI 16V, 2.0 16V Turbo, 2.0 DTI 16V, 2.2 direct, 2.2 DTI 16V, 3.2 V6** 10/04 - 07/08 74 -155 kW	**46-190604**		CH.Nr.: 51000001 ->; without IDS+ suspension; Conditions see certificates VA: lowering (expertise): 30 mm; axle load to: 1060 kg HA: without ride height adjustment; lowering (expertise): 30 mm; axle load to: 1215 kg
B12 PK	**1.9 CDTI, 1.9 CDTI 16V, 2.0 16V Turbo, 2.0 DTI 16V, 2.2 direct, 2.2 DTI 16V, 3.2 V6** 10/04 - 07/08 74 -155 kW	**46-190611**		CH.Nr.: 51000001 ->; without IDS+ suspension; Conditions see certificates VA: lowering (expertise): 30 mm; axle load to: 1135 kg HA: without ride height adjustment; lowering (expertise): 30 mm; axle load to: 1215 kg
B12 PK	**1.9 CDTI, 1.9 CDTI 16V, 2.0 16V Turbo, 2.0 DTI 16V, 2.2 direct, 2.2 DTI 16V, 3.2 V6** 10/03 - 09/04 74 -155 kW	**46-190581**		-> CH.Nr.: 41999999; without IDS+ suspension; Conditions see certificates VA: lowering (expertise): 30 mm; axle load to: 1135 kg HA: without ride height adjustment; lowering (expertise): 30 mm; axle load to: 1215 kg
B12 PK	**3.0 V6 CDTI** 10/03 - 09/04 130 kW	**46-190598**		-> CH.Nr.: 41999999; without IDS+ suspension; Conditions see certificates VA: lowering (expertise): 30 mm; axle load to: 1230 kg HA: without ride height adjustment; lowering (expertise): 30 mm; axle load to: 1215 kg
B12 PK	**3.0 CDTi, 3.0 V6 CDTI** 10/04 - 07/08 130 -135 kW	**46-190628**		CH.Nr.: 51000001 ->; without IDS+ suspension; Conditions see certificates VA: lowering (expertise): 30 mm; axle load to: 1230 kg HA: without ride height adjustment; lowering (expertise): 30 mm; axle load to: 1215 kg

VAUXHALL				
VAUXHALL VICEROY				
B4	**2500** 01/80 - 10/82 85 kW	*21-030376* **11-101369** SP		
B6 Sport	**2500** 01/80 - 10/82 85 kW	*34-001417*	**24-008938** OIO	VA: Quick Repair Service .; Used part return required . HA: charakteristic: 220/80
VAUXHALL VIVARO Combi				
B1	**1.9 DI, 1.9 DTI, 2.0 16V, 2.0 CDTI, 2.5 CDTI 16V, 2.5 DTI** 08/01 - 59 -107 kW	**12-224210**		VA: with ball bearing
B4	**1.9 DI, 1.9 DTI, 2.0 16V, 2.0 CDTI, 2.5 DTI** 08/01 - 59 -99 kW		**19-152615** OIO	
B4	**2.5 CDTI 16V, 1.9 DI, 1.9 DTI, 2.0 16V, 2.0 CDTI, 2.5 CDTI, 2.5 DTI** 04/04 - 59 -107 kW		**19-152615** OIO	
VAUXHALL VIVARO Box				
B1	**1.9 DI, 1.9 DTI, 2.0 16V, 2.0 CDTI, 2.5 CDTI, 2.5 DTI** 08/01 - 59 -107 kW	**12-224210**		VA: with ball bearing
VAUXHALL VIVARO Flatbed / Chassis				
B4	**2.0 CDTI, 2.5 CDTI, 2.5 D** 04/03 - 66 -107 kW		**19-152615** OIO	
VAUXHALL VX220				
B16 PSS10	**2.0 i Turbo, 2.2 i** 09/00 - 108 -147 kW	**48-136723**		Conditions see certificates VA: lowering (expertise): 0-10 mm; axle load to: 485 kg HA: lowering (expertise): 0-20 mm; axle load to: 760 kg
VAUXHALL ZAFIRA				
B1	**1.6 16V, 1.8 16V, 1.9, 2.0 DI 16V, 2.0 DTI 16V, 2.0 GSI Turbo, 2.2 16V, 2.2 D** 11/98 - 60 -147 kW	**12-117376**		VA: Hard Version; without ball bearing
B3	**1.6 16V** 04/99 - 74 kW	**36-130153**	**36-774210**	with standard chassis
B3	**1.6 16V** 04/99 - 74 kW	**36-130160**		with standard chassis; Heavy Duty Version .
B3	**1.8 16V, 1.9** 05/99 - 06/05 85 -147 kW	**36-130160**	**36-774210**	with standard chassis
B3	**1.8 16V, 1.9** 05/99 - 06/05 85 -147 kW	**36-130214**		with standard chassis; Heavy Duty Version .
B3	**2.0 DI 16V, 2.0 DTI 16V, 2.2 16V, 2.2 D** 11/98 - 60 -108 kW	**36-130214**	**36-774210**	with standard chassis
B3	**2.0 DI 16V, 2.0 DTI 16V, 2.2 16V, 2.2 D** 11/98 - 60 -108 kW	**36-197880**	**36-774210**	with standard chassis; Heavy Duty Version .
B4	**1.6 16V, 1.8 16V, 1.9, 2.0 DI 16V, 2.0 DTI 16V, 2.0 GSI Turbo, 2.2 16V, 2.2 D** 11/98 - 60 -147 kW	**22-106605** **22-106612**	**19-106625** OIO	
B6 Sport	**1.6 16V, 1.8 16V, 1.9, 2.0 DI 16V, 2.0 DTI 16V, 2.0 GSI Turbo, 2.2 16V, 2.2 D** 11/98 - 60 -147 kW	**35-045984**	**24-029896** OIO	

V

VAUXHALL				
VAUXHALL ZAFIRA				
B8	**1.6 16V, 1.8 16V, 1.9, 2.0 DI 16V, 2.0 DTI 16V, 2.0 GSI Turbo, 2.2 16V, 2.2 D** 11/98 - 60 -147 kW	**35-045991**	**24-029902**	
B12 PK	**1.6 16V, 1.8 16V, 2.0 DI 16V, 2.0 DTI 16V, 2.2 16V, 2.2 D** 11/98 - 60 -108 kW	**46-194220**		Conditions see certificates VA: lowering (expertise): 30 mm; axle load to: 1075 kg HA: lowering (expertise): 30 mm; axle load to: 1130 kg
VAUXHALL ZAFIRA Mk II				
B3	**1.6, 1.7 CDTI, 1.7 TD, 1.8** 04/05 - 77 -103 kW	**37-161804**	**38-162350**	with standard chassis
B3	**1.6, 1.7 CDTI, 1.7 TD, 1.8** 04/05 - 77 -103 kW	**37-161798**		with standard chassis; Heavy Duty Version .
B3	**1.6, 1.7 CDTI, 1.7 TD, 1.8** 04/05 - 77 -103 kW		**38-162343**	with standard chassis; with ride height adjustment
B3	**1.9 CDTI, 2.0, 2.2** 07/05 - 74 -176 kW	**37-161798**	**38-162350**	with standard chassis
B3	**1.9 CDTI, 2.0, 2.2** 07/05 - 74 -176 kW	**37-161781**		with standard chassis; Heavy Duty Version .
B3	**1.9 CDTI, 2.0, 2.2** 07/05 - 74 -176 kW		**38-162343**	with standard chassis; with ride height adjustment
B4	**1.6, 1.7 CDTI, 1.7 TD, 1.8, 1.9 CDTI, 2.0, 2.2** 04/05 - 74 -176 kW	**22-141590** **22-141606**	**19-141626**	without electronic suspension control; without IDS+ suspension
B6 Sport	**1.6, 1.7 CDTI, 1.7 TD, 1.8, 1.9 CDTI, 2.0, 2.2** 04/05 - 74 -176 kW	**35-114635** **35-114642**	**24-118576**	without IDS+ suspension; without electronic suspension control
B12 PK	**1.6, 1.8** 04/05 - 77 -103 kW	**46-194237**		without IDS+ suspension; without electronic suspension control; Conditions see certificates VA: lowering (expertise): 30 mm; axle load to: 1030 kg HA: lowering (expertise): 30-35 mm; axle load to: 1230 kg
B12 PK	**1.7 CDTI, 1.7 TD, 1.9 CDTI, 2.0, 2.2** 07/05 - 74 -176 kW	**46-194244**		without IDS+ suspension; without electronic suspension control; Conditions see certificates VA: lowering (expertise): 30 mm; axle load to: 1155 kg HA: lowering (expertise): 30-35 mm; axle load to: 1230 kg
VAUXHALL ZAFIRA Mk III (P12)				
B4	**1.4, 1.4 LPG, 1.8, 2.0 CDTi** 10/11 - 81 -121 kW	**22-183644** **22-183651**	**19-183633**	without FlexRide; with standard chassis
B6 Sport	**1.4, 1.4 LPG, 1.8, 2.0 CDTi** 10/11 - 81 -121 kW	**35-171669** **35-171676**	**24-171687**	without FlexRide; with standard chassis
B8	**1.4, 1.4 LPG, 1.8, 2.0 CDTi** 10/11 - 81 -121 kW	**35-171690** **35-171706**	**24-171717**	without FlexRide; with standard chassis
VOLVO				
VOLVO C30				
B1	**1.6, 1.6 D, 1.6 D2, 1.8, 1.8 FlexFuel, 2.0, 2.0 D, 2.0 FlexFuel, 2.4 D5, 2.4 i, D3, D4, D5, T5** 10/06 - 74 -169 kW	**12-224166**		VA: with ball bearing

VOLVO

VOLVO C30

B4	**1.6, 1.6 D, 1.6 D2, 1.8, 1.8 FlexFuel, 2.0, 2.0 D, 2.0 FlexFuel, 2.4 D5, 2.4 i, D3, D4, D5, T5** 10/06 - 74 -169 kW	**22-112811** **22-112880**	**19-119526**	
B6 Sport	**1.6, 1.6 D, 1.6 D2, 1.8, 1.8 FlexFuel, 2.0, 2.0 D, 2.0 FlexFuel, 2.4 D5, 2.4 i, D3, D4, D5, T5** 10/06 - 74 -169 kW	**35-110736** **35-110743**	**24-196529**	
B8	**1.6, 1.6 D, 1.6 D2, 1.8, 1.8 FlexFuel, 2.0, 2.0 D, 2.0 FlexFuel, 2.4 D5, 2.4 i, D3, D4, D5, T5** 10/06 - 74 -169 kW	**35-110767** **35-110774**	**24-196550**	
B12 PK	**1.6, 1.6 D, 1.6 D2, 1.8, 1.8 FlexFuel, 2.0, 2.0 FlexFuel** 10/06 - 74 -107 kW	**46-194367**		Conditions see certificates VA: lowering (expertise): 30 mm; axle load to: 1020 kg HA: lowering (expertise): 30 mm; axle load to: 900 kg
B12 PK	**2.0 D, 2.4 D5, 2.4 i, D3, D4, D5, T5** 10/06 - 100 -169 kW	**46-194350**		Conditions see certificates VA: lowering (expertise): 30 mm; axle load to: 1140 kg HA: lowering (expertise): 30 mm; axle load to: 900 kg
B14	**1.6, 1.6 D, 1.6 D2, 1.8, 1.8 FlexFuel, 2.0, 2.0 D, 2.0 FlexFuel, 2.4 D5, 2.4 i, D3, D4, D5, T5** 10/06 - 74 -169 kW	**47-121225**		Conditions see certificates VA: lowering (expertise): 15-30 mm; axle load to: 1100 kg HA: lowering (expertise): 10-20 mm; axle load to: 1090 kg
B16 PSS9	**1.6, 1.6 D, 1.6 D2, 1.8, 1.8 FlexFuel, 2.0, 2.0 D, 2.0 FlexFuel, 2.4 D5, 2.4 i, D3, D4, D5, T5** 10/06 - 74 -169 kW	**48-121262**		Conditions see certificates VA: lowering (expertise): 15-30 mm; axle load to: 1100 kg HA: lowering (expertise): 10-20 mm; axle load to: 1090 kg

VOLVO S40 I (VS)

B3	**1.6** 03/99 - 05/00 80 kW		**36-163113**	with standard chassis
B3	**1.6** 09/95 - 08/99 77 kW		**36-163113**	with standard chassis
B3	**1.8, 2.0, 2.0 T** 07/95 - 08/99 85 -118 kW	**36-163144**	**36-163113**	with standard chassis
B3	**1.8, 1.8 i** 03/98 - 04/00 90 -92 kW		**36-163113**	with standard chassis
B3	**1.8, 1.8 i** 05/00 - 12/03 90 -92 kW	**36-218097**		with standard chassis
B3	**1.9 TD** 07/95 - 08/99 66 kW	**36-154760**	**36-163113**	with standard chassis
B3	**1.9 DI** 03/99 - 12/03 70 -85 kW	**36-218097**		with standard chassis
B4	**1.6, 1.8, 1.8 i, 1.9 DI, 1.9 T4, 1.9 TD, 2.0, 2.0 T** 10/97 - 05/99 66 -147 kW	**22-046819** **22-046802**	**19-061283**	with standard chassis
B4	**1.6, 1.8, 1.8 i, 1.9 DI, 1.9 T4, 1.9 TD, 2.0, 2.0 T** 06/99 - 04/00 66 -147 kW	**22-118684** **22-118691**	**19-061283**	with standard chassis
B4	**1.6, 1.8, 1.8 i, 1.9 DI, 1.9 T4, 2.0, 2.0 T, 2.0 T4** 05/00 - 12/03 70 -147 kW	**22-120199** **22-120205**	**19-118703**	with standard chassis

VOLVO V40 Estate (VW)

B3	**1.8, 1.8 i, 2.0, 2.0 T** 07/95 - 08/99 85 -118 kW	**36-163144**	**36-154784**	with standard chassis; without ride height adjustment

V

VOLVO				
VOLVO V40 Estate (VW)				
B3	**1.8** 09/99 - 04/00 90 kW		**36-154784**	with standard chassis; without ride height adjustment
B3	**1.8** 05/00 - 06/04 90 kW	**36-218097**	**36-219292**	with standard chassis; without ride height adjustment
B3	**1.8 i** 06/01 - 06/04 90 kW	**36-218097**	**36-219292**	with standard chassis
B3	**1.9 TD** 07/95 - 08/99 66 kW	**36-154760**	**36-154784**	with standard chassis
B3	**1.9 DI** 03/99 - 04/00 70 kW		**36-154784**	with standard chassis; without ride height adjustment
B3	**1.9 DI** 05/00 - 07/00 70 kW	**36-163144**	**36-219292**	with standard chassis; without ride height adjustment
B3	**1.9 DI** 07/00 - 06/04 75 -85 kW	**36-218097**	**36-219292**	with standard chassis
B4	**1.6, 1.8, 1.8 i, 1.9 DI, 1.9 T4, 1.9 TD, 2.0, 2.0 T** 10/97 - 05/99 66 -147 kW	**22-046819** HA **22-046802** VA	**19-061283**	with standard chassis HA: without ride height adjustment
B4	**1.6, 1.8, 1.8 i, 1.9 DI, 1.9 T4, 1.9 TD, 2.0, 2.0 T** 05/99 - 04/00 66 -147 kW	**22-118684** HA **22-118691** VA	**19-118703**	with standard chassis HA: without ride height adjustment
B4	**1.6, 1.8, 1.8 i, 1.9 DI, 2.0, 2.0 T, 2.0 T4** 05/00 - 06/04 70 -147 kW	**22-120199** HA **22-120205** VA	**19-118703**	with standard chassis HA: without ride height adjustment
VOLVO S40 II (MS)				
B1	**1.6, 1.6 D, 1.6 D2, 1.8, 1.8 FlexFuel, 2.0, 2.0 D, 2.0 D4, 2.0 F, 2.4, 2.4 D5, D3, D4, T5** 01/04 - 74 -169 kW	**12-224166**		VA: with ball bearing
B4	**1.6, 1.6 D, 1.6 D2, 1.8, 1.8 FlexFuel, 2.0, 2.0 D, 2.0 D4, 2.0 F, 2.4, 2.4 D5, D3, D4, T5** 01/04 - 74 -169 kW	**22-112811** HA **22-112880** VA	**19-119526**	
B6 Sport	**1.6, 1.6 D, 1.6 D2, 1.8, 1.8 FlexFuel, 2.0, 2.0 D, 2.0 D4, 2.0 F, 2.4, 2.4 D5, D3, D4, T5** 01/04 - 74 -169 kW	**35-110736** HA **35-110743** VA	**24-196529**	
B8	**1.6, 1.6 D, 1.6 D2, 1.8, 1.8 FlexFuel, 2.0, 2.0 D, 2.0 D4, 2.0 F, 2.4, 2.4 D5, D3, D4, T5** 01/04 - 74 -169 kW	**35-110767** HA **35-110774** VA	**24-196550**	
B12 PK	**1.6, 1.6 D, 1.6 D2, 2.0, 2.0 F** 01/05 - 74 -107 kW	**46-182296**		Conditions see certificates VA: lowering (expertise): 25 mm; axle load to: 1020 kg HA: without ride height adjustment; lowering (expertise): 25 mm; axle load to: 1010 kg
B12 PK	**2.0 D, 2.0 D4, 2.4, 2.4 D5, T5** 01/04 - 96 -169 kW	**46-182289**		Conditions see certificates VA: lowering (expertise): 25 mm; axle load to: 1140 kg HA: without ride height adjustment; lowering (expertise): 25 mm; axle load to: 1010 kg
B14	**1.6, 1.6 D, 1.6 D2, 1.8, 1.8 FlexFuel, 2.0, 2.0 D, 2.0 D4, 2.0 F, 2.4, 2.4 D5, D3, D4, T5** 01/04 - 74 -169 kW	**47-121225**		Conditions see certificates VA: lowering (expertise): 35-50 mm; axle load to: 1100 kg HA: lowering (expertise): 35-50 mm; axle load to: 1090 kg

V

VOLVO

VOLVO S40 II (MS)

B16 PSS9	**1.6, 1.6 D, 1.6 D2, 1.8, 1.8 FlexFuel, 2.0, 2.0 D, 2.0 D4, 2.0 F, 2.4, 2.4 D5, D3, D4, T5** 01/04 - 74 -169 kW	**48-121262**		Conditions see certificates VA: lowering (expertise): 35-50 mm; axle load to: 1100 kg HA: lowering (expertise): 35-50 mm; axle load to: 1090 kg

VOLVO V50 (MW)

B1	**1.6, 1.6 D, 1.8, 1.8 FlexFuel, 2.0, 2.0 D, 2.0 FlexFuel, 2.4, 2.4 D5, 2.4 Tdi, D2, D3, D4, T5** 04/04 - 74 -169 kW	**12-224166**		VA: with ball bearing
B4	**1.6, 1.6 D, 1.8, 1.8 FlexFuel, 2.0, 2.0 D, 2.0 FlexFuel, 2.4, 2.4 D5, 2.4 Tdi, D2, D3, D4, T5** 04/04 - 74 -169 kW	**22-112811** ↰ **22-112880** ↱	**19-119526**	
B6 Sport	**1.6, 1.6 D, 1.8, 1.8 FlexFuel, 2.0, 2.0 D, 2.0 FlexFuel, 2.4, 2.4 D5, 2.4 Tdi, D2, D3, D4, T5** 04/04 - 74 -169 kW	**35-110736** ↰ **35-110743** ↱	**24-196529**	
B8	**1.6, 1.6 D, 1.8, 1.8 FlexFuel, 2.0, 2.0 D, 2.0 FlexFuel, 2.4, 2.4 D5, 2.4 Tdi, D2, D3, D4, T5** 04/04 - 74 -169 kW	**35-110767** ↰ **35-110774** ↱	**24-196550**	
B12 PK	**1.6, 1.6 D, 2.0, 2.0 FlexFuel, D2** 01/05 - 74 -107 kW	**46-182296**		Conditions see certificates VA: lowering (expertise): 25 mm; axle load to: 1020 kg HA: without ride height adjustment; lowering (expertise): 25 mm; axle load to: 1010 kg
B12 PK	**2.0 D, 2.4, 2.4 D5, D3, D4, T5** 04/04 - 100 -169 kW	**46-182289**		Conditions see certificates VA: lowering (expertise): 25 mm; axle load to: 1140 kg HA: without ride height adjustment; lowering (expertise): 25 mm; axle load to: 1010 kg
B14	**1.6, 1.6 D, 1.8, 1.8 FlexFuel, 2.0, 2.0 D, 2.0 FlexFuel, 2.4, 2.4 D5, 2.4 Tdi, D2, D3, D4, T5** 04/04 - 74 -169 kW	**47-121225**		Conditions see certificates VA: lowering (expertise): 20-40 mm; axle load to: 1100 kg HA: lowering (expertise): 20-40 mm; axle load to: 1090 kg
B16 PSS9	**1.6, 1.6 D, 1.8, 1.8 FlexFuel, 2.0, 2.0 D, 2.0 FlexFuel, 2.4, 2.4 D5, 2.4 Tdi, D2, D3, D4, T5** 04/04 - 74 -169 kW	**48-121262**		Conditions see certificates VA: lowering (expertise): 20-40 mm; axle load to: 1100 kg HA: lowering (expertise): 20-40 mm; axle load to: 1090 kg

VOLVO S60

B1	**2.0 T, 2.3 T5, 2.4, 2.4 Bifuel, 2.4 D, 2.4 D5, 2.4 T, 2.4 T5, 2.5 T, T5** 11/00 - 93 -195 kW	**12-224111**	**12-224128**	HA: without ride height adjustment
B3	**2.4** 11/00 - 103 -125 kW	**36-198344**	**36-214792**	with standard chassis; manual transmission
B3	**2.4 D5** 07/01 - 120 kW	**36-201082**	**36-214792**	with standard chassis
B4	**2.0 T, 2.3 T5, 2.4, 2.4 Bifuel, 2.4 D, 2.4 D5, 2.4 T, 2.4 T5, 2.5 T, T5** 11/00 - 93 -195 kW	**22-155344**	**24-193276**	without ride height adjustment
B6 Sport	**2.0 T, 2.3 T5, 2.4, 2.4 Bifuel, 2.4 D, 2.4 D5, 2.4 T, 2.4 T5, 2.5 T, T5** 11/00 - 93 -195 kW	**35-052210**	**24-067935**	with standard chassis; without ride height adjustment
B8	**2.0 T, 2.3 T5, 2.4, 2.4 D, 2.4 D5, 2.4 T, 2.4 T5, 2.5 T, T5** 11/00 - 93 -195 kW	**35-052227**	**24-067942**	with sports suspension; without ride height adjustment

V

VOLVO

VOLVO S60

B12 PK	**2.0 T, 2.4, 2.4 T, T5** 11/00 - 103 -184 kW		**46-190727**	without ride height adjustment; Conditions see certificates VA: lowering (expertise): 30 mm; axle load to: 1110 kg HA: lowering (expertise): 30 mm; axle load to: 1120 kg
B12 PK	**2.4 D, 2.4 D5, 2.5 T** 02/04 - 93 -154 kW		**46-190734**	without ride height adjustment; Conditions see certificates VA: lowering (expertise): 30 mm; axle load to: 1110 kg HA: lowering (expertise): 30 mm; axle load to: 1120 kg

VOLVO S70 (P80_)

B3	**2.0, 2.0 Turbo, 2.3, 2.3 T-5, 2.3 Turbo, 2.4, 2.4 Blu-Fuel, 2.4 Turbo, 2.5, 2.5 Bifuel** 01/97 - 11/00 93 -195 kW	**36-218295**	**36-218349**	with standard chassis; with ride height adjustment
B4	**2.0, 2.0 Turbo, 2.3, 2.3 T-5, 2.3 Turbo, 2.4, 2.4 Turbo, 2.5, 2.5 Bifuel, 2.5 TDI** 01/97 - 11/00 93 -195 kW	**22-045799** **11-101314** SP	**19-029450**	with standard chassis; without ride height adjustment
B6 Sport	**2.0, 2.0 Turbo, 2.3, 2.3 T-5, 2.3 Turbo, 2.4, 2.4 Turbo, 2.5, 2.5 Bifuel, 2.5 TDI** 01/97 - 11/00 93 -195 kW	**22-193360** **11-101314** SP	**24-016407**	without ride height adjustment

VOLVO C70 I Coupe

B3	**2.0, 2.0 T, 2.3 T-5, 2.5, 2.5 T** 03/97 - 09/02 120 -176 kW		**36-218219**	with standard chassis; without ride height adjustment
B3	**2.0, 2.0 T, 2.3 T-5, 2.5, 2.5 T** 03/97 - 09/02 120 -176 kW		**36-218080**	with standard chassis; with ride height adjustment
B4	**2.0, 2.0 T, 2.3 T-5, 2.5, 2.5 T** 03/97 - 09/02 120 -176 kW	**22-045799** **11-101314** SP	**19-029450**	
B6 Sport	**2.0, 2.0 T, 2.3 T-5, 2.5, 2.5 T** 03/97 - 09/02 120 -176 kW	**22-193360** **11-101314** SP	**24-016407**	

VOLVO C70 I Convertible

B3	**2.0, 2.0 T, 2.3 T5, 2.3 T-5, 2.4 T, 2.5, 2.5 T** 03/98 - 10/05 120 -180 kW		**36-218219**	with standard chassis; without ride height adjustment
B4	**2.0, 2.0 T, 2.3 T5, 2.3 T-5, 2.4 T, 2.5, 2.5 T** 03/98 - 10/05 120 -180 kW	**22-045799** **11-101314** SP	**19-029450**	
B6 Sport	**2.0, 2.0 T, 2.3 T5, 2.3 T-5, 2.4 T, 2.5, 2.5 T** 03/98 - 10/05 120 -180 kW	**22-193360** **11-101314** SP	**24-016407**	

VOLVO C70 II Convertible

B1	**2.0 D, 2.4, 2.4 i, T5** 03/07 - 100 -169 kW	**12-224166**		VA: with ball bearing
B4	**2.0 D, 2.4, 2.4 i, D5, T5** 03/07 - 100 -169 kW	**22-112811** **22-112880**	**19-147291**	with standard chassis
B6 Sport	**2.0 D, 2.4, 2.4 i, D5, T5** 03/07 - 100 -169 kW	**35-110736** **35-110743**	**24-142182**	
B8	**2.0 D, 2.4, 2.4 i, D5, T5** 03/07 - 100 -169 kW	**35-110767** **35-110774**	**24-142199**	

VOLVO				
VOLVO V70 I Estate (P80_)				
B3	**2.0, 2.0 Turbo, 2.4, 2.4 Bifuel, 2.4 Turbo, 2.5 TDI** 01/97 - 05/00 93 -166 kW	36-218295	**36-218165**	with standard chassis
B3	**2.0, 2.0 Turbo, 2.4, 2.4 Bifuel, 2.4 Turbo, 2.5 TDI** 01/97 - 05/00 93 -166 kW		36-218158	with standard chassis; Heavy Duty Version .
B3	**2.0, 2.0 Turbo, 2.4, 2.4 Bifuel, 2.4 Turbo, 2.5 TDI** 01/97 - 05/00 93 -166 kW		**36-218080**	with standard chassis; with ride height adjustment
B4	**2.0, 2.0 Turbo, 2.3 T-5, 2.3 Turbo, 2.4, 2.4 Bifuel, 2.4 Turbo, 2.5, 2.5 Bifuel, 2.5 TDI** 01/97 - 05/00 93 -184 kW	**22-045799** **11-101314** SP	**19-029450**	without ride height adjustment
B6 Sport	**2.0, 2.0 Turbo, 2.3 T-5, 2.3 Turbo, 2.4, 2.4 Bifuel, 2.4 Turbo, 2.5, 2.5 Bifuel, 2.5 TDI** 01/97 - 05/00 93 -184 kW	**22-193360** **11-101314** SP	**24-016407**	without ride height adjustment
VOLVO V70 II Estate (P80_)				
B3	**2.0 T, 2.4, 2.4 Bifuel** 03/00 - 103 -132 kW	**36-201082**	**36-214792**	with standard chassis; manual transmission
B3	**2.0 T, 2.4, 2.4 Bifuel** 03/00 - 103 -132 kW	**36-201075**	**36-214792**	with standard chassis; automatic transmission
B3	**2.0 T, 2.4, 2.4 Bifuel** 03/00 - 103 -132 kW		**36-218301**	with standard chassis; with ride height adjustment
B3	**2.4 D, 2.4 D5, 2.4 T** 03/00 - 93 -147 kW	**36-201075**	**36-214792**	with standard chassis
B3	**2.4 D, 2.4 D5, 2.4 T** 03/00 - 93 -147 kW		**36-218301**	with standard chassis; with ride height adjustment
B3	**2.5 TDI** 03/00 - 103 kW	**36-201099**	**36-214792**	with standard chassis
B3	**2.5 TDI** 03/00 - 103 kW		**36-218301**	with standard chassis; with ride height adjustment
B4	**2.0 T, 2.3, 2.3 T5, 2.4, 2.4 Bifuel, 2.4 D, 2.4 D5, 2.4 T, 2.4 T5, 2.5 T, 2.5 TDI** 03/00 - 93 -195 kW	**22-155344**	**24-193276**	without ride height adjustment
B6 Sport	**2.0 T, 2.3, 2.3 T5, 2.4, 2.4 Bifuel, 2.4 D, 2.4 D5, 2.4 T, 2.4 T5, 2.5 T, 2.5 TDI** 03/00 - 93 -195 kW	**35-052210**	**24-067935**	without ride height adjustment
B8	**2.0 T, 2.3, 2.3 T5, 2.4, 2.4 Bifuel, 2.4 D, 2.4 D5, 2.4 T, 2.4 T5, 2.5 T, 2.5 TDI** 03/00 - 93 -195 kW	**35-052227**	**24-067942**	without ride height adjustment
B12 PK	**2.0 T, 2.3 T5, 2.4, 2.4 T, 2.4 T5** 03/00 - 103 -191 kW	**46-190703**		without ride height adjustment; Conditions see certificates VA: lowering (expertise): 30 mm; axle load to: 1100 kg HA: lowering (expertise): 30 mm; axle load to: 1170 kg
B12 PK	**2.4 D, 2.4 D5, 2.5 T, 2.5 TDI** 03/00 - 93 -154 kW	**46-190710**		without ride height adjustment; Conditions see certificates VA: lowering (expertise): 30 mm; axle load to: 1120 kg HA: lowering (expertise): 30 mm; axle load to: 1170 kg

V

VOLVO				
VOLVO V70 III Estate				
B4	**1.6 D, 1.6 DRIVe, 2.0, 2.0 D, 2.0 FlexFuel, 2.0 T, 2.4 D, 2.4 D5, 2.5 T, 2.5 T FlexFuel, 2.5 T FlexiFuel, 3.2, D3, D5, T4, T5** 08/07 - 80 -177 kW	**22-182869** **22-182876**	**19-170206**	without electronic suspension control; with standard chassis; with sports suspension; without ride height adjustment
B6 Sport	**1.6 D, 1.6 DRIVe, 2.0, 2.0 D, 2.0 FlexFuel, 2.0 T, 2.4 D, 2.4 D5, 2.5 T, 2.5 T FlexFuel, 2.5 T FlexiFuel, 3.2, D3, D5, T4, T5** 08/07 - 80 -177 kW	**35-144960** **35-144977**	**24-146135**	with standard chassis; without electronic suspension control; without ride height adjustment
B8	**1.6 D, 1.6 DRIVe, 2.0, 2.0 D, 2.0 FlexFuel, 2.0 T, 2.4 D, 2.4 D5, 2.5 T, 2.5 T FlexFuel, 2.5 T FlexiFuel, 3.2, D3, D5, T4, T5** 08/07 - 80 -177 kW	**35-144984** **35-144991**	**24-143639**	without electronic suspension control; without ride height adjustment
VOLVO XC70 CROSS COUNTRY				
B3	**2.4 D5 AWD, 2.4 T XC AWD, 2.5 T XC AWD** 09/02 - 136 -154 kW	**36-201105**		with standard chassis; automatic transmission
VOLVO S80 (TS, XY)				
B1	**2.0, 2.0 T, 2.4, 2.4 D, 2.4 D5, 2.4 T, 2.5 T, 2.5 TDI, 2.8 T6, 2.9, 3.0, 3.0 T6** 05/98 - 07/06 96 -200 kW	**12-224111**	**12-224128**	VA: CH.Nr.: 153440 ->; HA: without ride height adjustment
B4	**2.0, 2.0 T, 2.4, 2.4 D, 2.4 D5, 2.4 T, 2.5 T, 2.5 TDI, 2.8 T6, 2.9, 3.0, 3.0 T6** 05/98 - 07/06 96 -200 kW	**22-155344**	**24-193276**	with standard chassis
B6 Sport	**2.0, 2.0 T, 2.4, 2.4 D, 2.4 D5, 2.4 T, 2.5 T, 2.5 TDI, 2.8 T6, 2.9, 3.0, 3.0 T6** 05/98 - 07/06 96 -200 kW	**35-052210**	**24-067935**	with standard chassis; without ride height adjustment
B8	**2.0, 2.0 T, 2.4, 2.4 D, 2.4 D5, 2.4 T, 2.5 T, 2.5 TDI, 2.8 T6, 2.9, 3.0, 3.0 T6** 05/98 - 07/06 96 -200 kW	**35-052227**	**24-067942**	with sports suspension; without ride height adjustment
VOLVO S80 II				
B4	**2.0, 2.0 FlexFuel, 2.0 T, 2.0 TDi, 2.4 D, 2.4 D5, 2.5 T, 2.5 T FlexFuel, 3.2, D3, D5, T4, T5** 03/06 - 100 -179 kW	**22-182869** **22-182876**	**19-170206**	without electronic suspension control; with standard chassis; with sports suspension; without ride height adjustment
B6 Sport	**2.0, 2.0 FlexFuel, 2.0 T, 2.0 TDi, 2.4 D, 2.4 D5, 2.5 T, 2.5 T FlexFuel, 3.2, D3, D5, T4, T5** 03/06 - 100 -179 kW	**35-144960** **35-144977**	**24-143639**	with standard chassis; without electronic suspension control; without ride height adjustment
B8	**2.0, 2.0 FlexFuel, 2.0 T, 2.0 TDi, 2.4 D, 2.4 D5, 2.5 T, 2.5 T FlexFuel, 3.2, D3, D5, T4, T5** 03/06 - 100 -179 kW	**35-144984** **35-144991**	**24-143646**	without electronic suspension control; without ride height adjustment
B12 PK	**2.4 D, 2.4 D5, 2.5 T, 2.5 T FlexFuel, 3.2, D5** 03/06 - 120 -179 kW	**46-190741**		without ride height adjustment; Conditions see certificates VA: lowering (expertise): 30 mm; axle load to: 1270 kg HA: lowering (expertise): 30 mm; axle load to: 1210 kg
VOLVO XC 90				
B3	**2.5 T** 10/02 - 154 kW	**36-201761**	36-219513	with standard chassis

V

VOLVO				
VOLVO XC 90				
B3	**2.5 T, D5** 10/02 - 120 -154 kW		36-218318	with standard chassis; Heavy Duty Version .
B3	**2.5 T, D5** 10/02 - 120 -154 kW		36-219520	with standard chassis; with ride height adjustment
B3	**D5** 10/02 - 120 -136 kW	**36-201761**	36-219513	with standard chassis
B4	**2.5 T, 3.2, D5, T6, V8** 10/02 - 120 -232 kW	**22-170729**	i.V.	with standard chassis; without ride height adjustment
B6 Sport	**2.5 T, 3.2, D5, T6, V8** 10/02 - 120 -232 kW	**35-146995**	**24-147002**	without ride height adjustment; with coil-spring suspension
B6 Sport	**2.5 T, 3.2, D5, T6, V8** 10/02 - 120 -232 kW	**35-146995**	**24-147002**	with ride height adjustment; with coil-spring suspension HA: Self-levelling inactive after modification
VOLVO 140 (142, 144)				
B3	**1.8, 1.8 S, 2.0, 2.0 S** 08/66 - 08/75 55 -91 kW	**36-163243**	**36-163212**	with standard chassis
B6 Sport	**1.8, 1.8 S, 2.0, 2.0 S** 08/66 - 08/75 55 -91 kW	**24-002899**		
VOLVO 164				
B6 Sport	**2.9, 2.9 E** 08/68 - 07/74 96 -118 kW	**24-002899**		
VOLVO 240 (P242, P244)				
B3	**2.0, 2.1, 2.1 Turbo, 2.3, 2.3 i CAT, 2.4 Diesel, 2.7 GLT6** 08/74 - 07/80 58 -114 kW	**36-163199**	**36-163212**	with standard chassis
B3	**2.0, 2.1, 2.1 Turbo, 2.3, 2.3 i CAT, 2.4 Diesel, 2.7 GLT6** 08/74 - 07/80 58 -114 kW	**36-163182**		with standard chassis; Heavy Duty Version .
B4	**2.0, 2.1, 2.1 Turbo, 2.3, 2.3 i CAT, 2.4 Diesel, 2.7 GLT6** 08/74 - 07/80 58 -114 kW	**21-030314**	**19-019529**	
B6 Sport	**2.0, 2.1, 2.1 Turbo, 2.3, 2.3 i CAT, 2.4 Diesel, 2.7 GLT6** 08/74 - 07/80 58 -114 kW	**34-181539**	**24-002967**	VA: charakteristic: 131/83 HA: charakteristic: 225/107
B6 Sport	**2.0, 2.1, 2.1 Turbo, 2.3, 2.3 i CAT, 2.4 Diesel, 2.7 GLT6** 08/74 - 07/80 58 -114 kW	**34-030837**	**24-022118**	mark: Rallye VA: charakteristic: 350/150 HA: charakteristic: 275/200
B6 Sport	**2.0, 2.1, 2.1 Turbo, 2.3, 2.3 i CAT, 2.4 Diesel, 2.7 GLT6** 08/74 - 07/80 58 -114 kW	**34-031520**		mark: Heavy Duty VA: charakteristic: 300/175
B6 Sport	**2.0, 2.1, 2.1 Turbo, 2.3, 2.3 i CAT, 2.4 Diesel, 2.7 GLT6** 08/74 - 07/80 58 -114 kW	**34-030806**	**33-067230**	mark: Cup VA: charakteristic: 305/206 HA: charakteristic: 225/150
VOLVO 240 Kombi (P245)				
B3	**2.0, 2.1, 2.1 Turbo, 2.3, 2.3 CAT, 2.3 i CAT, 2.4 Diesel, 2.7 GLT6, 2.8** 08/74 - 09/82 50 -114 kW	**36-163199**	**36-163137**	with standard chassis
B3	**2.0, 2.1, 2.1 Turbo, 2.3, 2.3 CAT, 2.3 i CAT, 2.4 Diesel, 2.7 GLT6, 2.8** 08/74 - 09/82 50 -114 kW	**36-163182**	**36-163106**	with standard chassis; Heavy Duty Version .

V

VOLVO				
VOLVO 240 Kombi (P245)				
B4	**2.0, 2.1, 2.1 Turbo, 2.3, 2.3 CAT, 2.3 i CAT, 2.4 Diesel, 2.7 GLT6, 2.8** 08/74 - 09/82 50 -114 kW	**21-030314**	**19-019529**	
B6 Sport	**2.0, 2.1, 2.1 Turbo, 2.3, 2.3 CAT, 2.3 i CAT, 2.4 Diesel, 2.7 GLT6, 2.8** 08/74 - 09/82 50 -114 kW	**34-181539**	**24-002967**	VA: charakteristic: 131/83 HA: charakteristic: 225/107
B6 Sport	**2.0, 2.1, 2.1 Turbo, 2.3, 2.3 CAT, 2.3 i CAT, 2.4 Diesel, 2.7 GLT6, 2.8** 08/74 - 09/82 50 -114 kW	**34-030837**	**24-022118**	mark: Rallye VA: charakteristic: 350/150 HA: charakteristic: 275/200
B6 Sport	**2.0, 2.1, 2.1 Turbo, 2.3, 2.3 CAT, 2.3 i CAT, 2.4 Diesel, 2.7 GLT6, 2.8** 08/74 - 09/82 50 -114 kW	**34-031520**		mark: Heavy Duty VA: charakteristic: 300/175
B6 Sport	**2.0, 2.1, 2.1 Turbo, 2.3, 2.3 CAT, 2.3 i CAT, 2.4 Diesel, 2.7 GLT6, 2.8** 08/74 - 09/82 50 -114 kW	**34-030806**	**33-067230**	mark: Cup VA: charakteristic: 305/206 HA: charakteristic: 225/150
VOLVO 260 (P262, P264)				
B3	**2.7, 2.8** 08/74 - 07/82 92 -114 kW	**36-163199**	**36-163212**	with standard chassis
B3	**2.7, 2.8** 08/74 - 07/82 92 -114 kW	**36-163182**		with standard chassis; Heavy Duty Version .
B4	**2.7, 2.8** 08/74 - 07/82 92 -114 kW	**21-030314**	**19-019529**	
B6 Sport	**2.7, 2.8** 08/74 - 07/82 92 -114 kW	**34-181539**	**24-002967**	VA: charakteristic: 131/83 HA: charakteristic: 225/107
B6 Sport	**2.7, 2.8** 08/74 - 07/82 92 -114 kW	**34-030837**	**24-022118**	mark: Rallye VA: charakteristic: 350/150 HA: charakteristic: 275/200
B6 Sport	**2.7, 2.8** 08/74 - 07/82 92 -114 kW	**34-031520**		mark: Heavy Duty VA: charakteristic: 300/175
B6 Sport	**2.7, 2.8** 08/74 - 07/82 92 -114 kW	**34-030806**	**33-067230**	mark: Cup VA: charakteristic: 305/206 HA: charakteristic: 225/150
VOLVO 260 Coupe (P262)				
B3	**2.7** 08/77 - 07/78 103 kW	**36-163199**	**36-163212**	with standard chassis
B4	**2.7** 08/77 - 07/78 103 kW	**21-030314**	**19-019529**	
B6 Sport	**2.7** 08/77 - 07/78 103 kW	**34-181539**	**24-002967**	VA: charakteristic: 131/83 HA: charakteristic: 225/107
B6 Sport	**2.7** 08/77 - 07/78 103 kW	**34-030837**	**24-022118**	mark: Rallye VA: charakteristic: 350/150 HA: charakteristic: 275/200
B6 Sport	**2.7** 08/77 - 07/78 103 kW	**34-031520**		mark: Heavy Duty VA: charakteristic: 300/175
B6 Sport	**2.7** 08/77 - 07/78 103 kW	**34-030806**	**33-067230**	mark: Cup VA: charakteristic: 305/206 HA: charakteristic: 225/150
VOLVO 260 Estate (P265)				
B3	**2.7, 2.8** 07/75 - 07/82 92 -114 kW	**36-163199**	**36-163137**	with standard chassis
B3	**2.7, 2.8** 07/75 - 07/82 92 -114 kW	**36-163182**	**36-163106**	with standard chassis; Heavy Duty Version .

V

VOLVO				
VOLVO 260 Estate (P265)				
B4	**2.7, 2.8** 07/75 - 07/82 92 -114 kW	**21-030314**	**19-019529** OIO	
B6 Sport	**2.7, 2.8** 07/75 - 07/82 92 -114 kW	**34-181539**	**24-002967** OIO	VA: charakteristic: 131/83 HA: charakteristic: 225/107
B6 Sport	**2.7, 2.8** 07/75 - 07/82 92 -114 kW	**34-030837**	**24-022118** OIO	mark: Rallye VA: charakteristic: 350/150 HA: charakteristic: 275/200
B6 Sport	**2.7, 2.8** 07/75 - 07/82 92 -114 kW	**34-031520**		mark: Heavy Duty VA: charakteristic: 300/175
B6 Sport	**2.7, 2.8** 07/75 - 07/82 92 -114 kW	**34-030806**	**33-067230** OIO	mark: Cup VA: charakteristic: 305/206 HA: charakteristic: 225/150
VOLVO 340-360 (343, 345)				
B3	**1.4** 08/75 - 07/86 46 -52 kW	**36-202690**		with standard chassis
VOLVO 340-360 Saloon (344)				
B3	**1.4** 08/83 - 12/88 50 -53 kW	**36-202690**		with standard chassis
VOLVO 440 K (445)				
B3	**1.6** 09/88 - 12/96 61 kW	**36-163205**	**36-163083**	with standard chassis
B3	**1.8, 1.9 Turbo-Diesel, 2.0** 08/92 - 12/96 66 -81 kW	**36-154791**	**36-163083**	with standard chassis
B4	**1.6, 1.7, 1.7 Turbo, 1.8, 1.9 Turbo-Diesel, 2.0** 08/88 - 12/96 58 -90 kW	**22-041067**	**19-019871** OIO	
VOLVO 460 L (464)				
B3	**1.6** 07/92 - 07/96 61 kW	**36-163205**	**36-163083**	with standard chassis
B3	**1.8, 1.9 Turbo-Diesel, 2.0** 08/91 - 07/96 66 -81 kW	**36-154791**	**36-163083**	with standard chassis
B4	**1.6, 1.7, 1.7 Turbo, 1.8, 1.9 Turbo-Diesel, 2.0** 08/91 - 07/96 58 -90 kW	**22-041067**	**19-019871** OIO	
VOLVO 480 E				
B3	**1.7, 1.7 Turbo, 2.0** 08/86 - 09/95 70 -90 kW	**36-154791**	**36-163083**	with standard chassis
B4	**1.7, 1.7 Turbo, 2.0** 08/86 - 09/95 70 -90 kW	**22-041067**	**19-019871** OIO	
VOLVO 740 (744)				
B3	**2.0, 2.0 GLE, 2.0 Turbo, 2.3, 2.3 GLE, 2.3 Turbo** 08/85 - 08/91 76 -147 kW	**36-163168**	**36-163120**	with standard chassis
B3	**2.0 GLE** 04/83 - 07/84 85 kW		**36-163120**	with standard chassis
B3	**2.4 Diesel, 2.4 TD** 08/84 - 07/92 60 -90 kW	**36-163151**	**36-163120**	with standard chassis

VOLVO

VOLVO 740 (744)

B4	**2.0, 2.0 GLE, 2.3, 2.3 Turbo, 2.4 Diesel, 2.4 TD** 07/88 - 07/92 60 -140 kW	**21-030543** **11-103622** SP	**19-019888** OIO	CH.Nr.: 81680 ->; with standard chassis; without ride height adjustment; rigid axle
B4	**2.0, 2.0 GLE, 2.3, 2.4 Diesel, 2.4 TD** 07/88 - 07/92 60 -118 kW	**21-030543** **11-103622** SP		CH.Nr.: 81680 ->; with ride height adjustment; rigid axle
B4	**2.3 Turbo** 08/86 - 07/90 115 -140 kW	**21-030543** **11-103622** SP		with ride height adjustment; multilink axle; rigid axle
B4	**2.3 Turbo** 08/85 - 12/88 134 kW	**21-030543**	**19-019888** OIO	with standard chassis; with ride height adjustment; rigid axle
B6 Sport	**2.0, 2.3 Turbo, 2.4 Diesel, 2.4 TD** 08/88 - 07/92 60 -140 kW	**34-002926**	**24-016629** OIO	without ride height adjustment
B6 Sport	**2.0, 2.0 GLE, 2.3, 2.4 Diesel, 2.4 TD** 07/88 - 10/88 60 -118 kW	**34-002926**	**24-012744** OIO	CH.Nr.: 81680 ->; without ride height adjustment; rigid axle
B6 Sport	**2.3** 08/83 - 04/84 95 kW		**24-012744** OIO	-> CH.Nr.: 81679; without ride height adjustment
B6 Sport	**2.3 Turbo** CH-Nr. - 07/88 115 -134 kW	**34-002926**	**24-012744** OIO	CH.Nr.: 81680 ->; without ride height adjustment
B8	**2.0, 2.0 GLE, 2.3, 2.3 Turbo, 2.4 Diesel, 2.4 TD** 07/88 - 07/92 60 -140 kW	**34-030677**	**24-022033** OIO	CH.Nr.: 81680 ->; without ride height adjustment; rigid axle
B8	**2.3 Turbo** CH-Nr. - 07/88 115 -134 kW	**34-030677**	**24-022033** OIO	CH.Nr.: 81680 ->; without ride height adjustment

VOLVO 740 Kombi (745)

B3	**2.0, 2.0 16V, 2.0 GLE, 2.0 Turbo, 2.3, 2.3 GL, 2.3 GLE, 2.3 Turbo** 08/85 - 08/91 76 -147 kW	**36-163168**	**36-164301**	with standard chassis
B3	**2.4 Diesel, 2.4 TD Interc., 2.4 Turbo-Diesel** 08/85 - 07/92 60 -90 kW	**36-163151**	**36-164301**	with standard chassis
B4	**2.0, 2.0 16V, 2.0 GLE, 2.0 Turbo, 2.3, 2.3 Turbo, 2.4 Diesel, 2.4 TD Interc., 2.4 Turbo-Diesel** 07/88 - 07/92 60 -147 kW	**21-030543** **11-103622** SP	**19-019888** OIO	CH.Nr.: 81680 ->; without ride height adjustment; rigid axle
B4	**2.0, 2.0 16V, 2.0 GLE, 2.0 Turbo, 2.3, 2.3 Turbo, 2.4 Diesel, 2.4 TD Interc., 2.4 Turbo-Diesel** 07/88 - 07/92 60 -147 kW	**21-030543** **11-103622** SP		CH.Nr.: 81680 ->; with ride height adjustment; rigid axle
B6 Sport	**2.0, 2.0 16V, 2.0 GLE, 2.0 Turbo, 2.3, 2.3 Turbo, 2.4 Diesel, 2.4 TD Interc.** 07/88 - 08/91 60 -147 kW	**34-002926**	**24-012744** OIO	CH.Nr.: 81680 ->; without ride height adjustment; rigid axle
B6 Sport	**2.3 Turbo** CH-Nr. - 07/88 115 kW	**34-002926**	**24-012744** OIO	CH.Nr.: 81680 ->; without ride height adjustment
B6 Sport	**2.3 Turbo, 2.4 Turbo-Diesel** 08/88 - 07/92 80 -140 kW	**34-002926**	**24-016629** OIO	without ride height adjustment
B6 Sport	**2.3 Turbo** CH-Nr. - 07/88 134 kW	**34-002926**	**24-012744** OIO	CH.Nr.: 81680 ->; without ride height adjustment
B8	**2.0, 2.0 16V, 2.0 GLE, 2.0 Turbo, 2.3, 2.3 Turbo, 2.4 Diesel, 2.4 TD Interc., 2.4 Turbo-Diesel** 07/88 - 07/92 60 -147 kW	**34-030677**	**24-022033** OIO	CH.Nr.: 81680 ->; without ride height adjustment; rigid axle

V

VOLVO				
VOLVO 760 (704, 764)				
B3	**2.3 Turbo, 2.4 D, 2.4 Turbo Diesel, 2.8** 08/81 - 07/84 60 -127 kW		**36-163120**	with standard chassis
B3	**2.3, 2.3 Turbo, 2.8** 08/84 - 08/90 84 -134 kW	**36-163168**	**36-163120**	with standard chassis
B3	**2.4 D, 2.4 TD Interc., 2.4 Turbo Diesel** 08/84 - 07/92 60 -85 kW	**36-163151**	**36-163120**	with standard chassis
B4	**2.3 Turbo** 08/82 - 04/84 127 kW	**21-030536**	**19-019888** OIO	without ride height adjustment; rigid axle
B4	**2.3 Turbo, 2.4 Turbo Diesel, 2.8** 05/84 - 07/88 82 -127 kW	**21-030543** **11-103622** SP	**19-019888** OIO	without ride height adjustment; rigid axle
B4	**2.3 Turbo, 2.4 Turbo Diesel, 2.8** 08/81 - 04/84 82 -127 kW	**21-030536**		with ride height adjustment; rigid axle
B4	**2.3 Turbo, 2.4 Turbo Diesel, 2.8** 05/84 - 07/88 82 -127 kW	**21-030543** **11-103622** SP		with ride height adjustment; rigid axle
B4	**2.3, 2.3 Turbo, 2.4 D, 2.4 TD Interc., 2.4 Turbo Diesel, 2.8** 01/82 - 08/90 60 -134 kW	**21-030543** **11-103622** SP	**19-019888** OIO	without ride height adjustment; rigid axle
B4	**2.3, 2.3 Turbo, 2.4 D, 2.4 Turbo Diesel, 2.8** 01/82 - 08/90 60 -134 kW	**21-030543** **11-103622** SP		with ride height adjustment; rigid axle
B4	**2.4 D, 2.4 TD Interc., 2.4 Turbo Diesel, 2.8** 01/82 - 07/92 60 -125 kW	**21-030543** **11-103622** SP		with ride height adjustment; multilink axle
B4	**2.4 Turbo Diesel, 2.8** 08/81 - 04/84 82 -115 kW	**21-030536**	**19-019888** OIO	without ride height adjustment; rigid axle
B6 Sport	**2.3 Turbo, 2.4 Turbo Diesel, 2.8** 08/81 - 04/84 82 -127 kW		**24-012744** OIO	-> CH.Nr.: 81679; without ride height adjustment
B6 Sport	**2.3, 2.3 Turbo, 2.4 D, 2.4 TD Interc., 2.4 Turbo Diesel, 2.8** 05/84 - 07/88 60 -134 kW	**34-002926**	**24-012744** OIO	CH.Nr.: 81680 ->; without ride height adjustment
B6 Sport	**2.4 TD Interc., 2.4 Turbo Diesel** 04/87 - 07/92 80 -85 kW	**34-002926**	**24-016629** OIO	without ride height adjustment
B8	**2.3, 2.3 Turbo, 2.4 D, 2.4 TD Interc., 2.4 Turbo Diesel, 2.8** 05/84 - 07/88 60 -134 kW	**34-030677**	**24-022033** OIO	CH.Nr.: 81680 ->; without ride height adjustment
VOLVO 760 Kombi (704, 765)				
B3	**2.3, 2.3 Turbo, 2.8** 08/84 - 08/90 84 -134 kW	**36-163168**	**36-164301**	with standard chassis
B3	**2.4 D, 2.4 TD Interc.** 01/82 - 07/92 60 -85 kW	**36-163151**	**36-164301**	with standard chassis
B4	**2.3 Turbo, 2.4 D, 2.4 TD Interc., 2.8** 01/82 - 08/91 60 -134 kW	**21-030543** **11-103622** SP	**19-019888** OIO	without ride height adjustment; rigid axle
B4	**2.3 Turbo, 2.4 D, 2.4 TD Interc., 2.8** 01/82 - 08/91 60 -134 kW	**21-030543** **11-103622** SP		
B6 Sport	**2.3 Turbo, 2.4 D, 2.4 TD Interc.** 08/88 - 07/92 60 -134 kW	**34-002926**	**24-016629** OIO	without ride height adjustment
B6 Sport	**2.3 Turbo, 2.4 D, 2.4 TD Interc., 2.8** CH-Nr. - 07/88 60 -134 kW	**34-002926**	**24-012744** OIO	CH.Nr.: 81680 ->; without ride height adjustment

V

VOLVO				
VOLVO 760 Kombi (704, 765)				
B8	**2.3 Turbo, 2.4 D, 2.4 TD Interc., 2.8** 05/84 - 07/88 60 -134 kW	**34-030677**	**24-022033**	CH.Nr.: 81680 ->; without ride height adjustment
VOLVO 780				
B4	**2.4 D, 2.9** 04/86 - 07/90 90 -115 kW	**21-030543** **11-103622** SP	**19-019888**	rigid axle
B4	**2.4 D, 2.9** 04/86 - 07/90 90 -115 kW	**21-030543** **11-103622** SP		with ride height adjustment; multilink axle
VOLVO 850 (LS)				
B4	**2.0, 2.0 Turbo, 2.3, 2.3 T5, 2.3 T5 R, 2.3 T5-R, 2.3 Turbo R, 2.4 GLE, 2.5, 2.5 TDI** 08/91 - 10/97 93 -184 kW	**22-045799** **11-101314** SP	**19-029450**	with standard chassis; without ride height adjustment
B4	**2.0, 2.0 Turbo, 2.3, 2.3 T5, 2.3 T5 R, 2.3 T5-R, 2.3 Turbo R, 2.4 GLE, 2.5, 2.5 TDI** 08/91 - 10/97 93 -184 kW	**22-045799** **11-101314** SP		with standard chassis; with ride height adjustment
B6 Sport	**2.0, 2.0 Turbo, 2.3, 2.3 T5, 2.3 T5 R, 2.3 T5-R, 2.3 Turbo R, 2.4 GLE, 2.5, 2.5 TDI** 08/91 - 10/97 93 -184 kW	**22-193360** **11-101314** SP	**24-016407**	without ride height adjustment
B6 Sport	**2.0, 2.0 Turbo, 2.3 T5, 2.5** 06/91 - 01/94 103 -166 kW	**22-193360**	**24-016407**	without ride height adjustment
VOLVO 850 Estate (LW)				
B3	**2.0, 2.0 Turbo, 2.5** 09/92 - 10/97 93 -155 kW	36-218127	**36-218165**	with standard chassis
B3	**2.0, 2.0 Turbo, 2.5** 09/92 - 10/97 93 -155 kW		36-218158	with standard chassis; Heavy Duty Version .
B3	**2.0, 2.0 Turbo, 2.5** 09/92 - 10/97 93 -155 kW		**36-218080**	with standard chassis; with ride height adjustment
B3	**2.3 T5, 2.3 T5-R** 02/93 - 12/96 166 -184 kW	36-218134	**36-218165**	with standard chassis
B3	**2.3 T5, 2.3 T5-R** 02/93 - 12/96 166 -184 kW		**36-218080**	with standard chassis; with ride height adjustment
B3	**2.5 AWD** 04/96 - 12/96 142 kW	36-218141		with standard chassis
B3	**2.5 AWD** 04/96 - 12/96 142 kW		**36-201044**	with standard chassis; with ride height adjustment
B3	**2.5 TDI** 08/95 - 12/96 103 kW		**36-218165**	with standard chassis
B3	**2.5 TDI** 08/95 - 12/96 103 kW		**36-218080**	with standard chassis; with ride height adjustment
B4	**2.0, 2.0 Turbo, 2.3, 2.3 T5, 2.3 T5 R, 2.3 T5-R, 2.3 Turbo R, 2.4 GLE, 2.5, 2.5 TDI** 09/92 - 10/97 93 -184 kW	**22-045799** **11-101314** SP	**19-029450**	with standard chassis; without ride height adjustment
B4	**2.0, 2.0 Turbo, 2.3, 2.3 T5, 2.3 T5 R, 2.3 T5-R, 2.3 Turbo R, 2.4 GLE, 2.5, 2.5 TDI** 09/92 - 10/97 93 -184 kW	**22-045799** **11-101314** SP		with standard chassis; with ride height adjustment

V

VOLVO

VOLVO 850 Estate (LW)

B6 Sport	**2.0, 2.0 Turbo, 2.3, 2.3 T5, 2.3 T5 R, 2.3 T5-R, 2.3 Turbo R, 2.4 GLE, 2.5, 2.5 TDI** 09/92 - 10/97 93 -184 kW	**22-193360** **11-101314** SP	**24-016407** OIO	without ride height adjustment

VOLVO 940 (944)

B4	**2.0, 2.0 GL, 2.0 Turbo, 2.3, 2.3 Turbo, 2.4 D, 2.4 TD Intercooler, 2.4 Turbo Diesel** 08/90 - 12/94 60 -140 kW	**21-030543** **11-103622** SP	**19-019888** OIO	without ride height adjustment; rigid axle
B4	**2.0, 2.0 GL, 2.0 Turbo, 2.3, 2.3 Turbo, 2.4 D, 2.4 TD Intercooler, 2.4 Turbo Diesel** 08/90 - 12/94 60 -140 kW	**21-030543** **11-103622** SP		with ride height adjustment; rigid axle
B6 Sport	**2.0, 2.0 GL, 2.0 Turbo, 2.3, 2.3 Turbo, 2.4 D, 2.4 TD Intercooler, 2.4 Turbo Diesel** 08/90 - 12/94 60 -140 kW	**34-002926**	**24-012744** OIO	without ride height adjustment; rigid axle
B6 Sport	**2.0, 2.0 GL, 2.0 Turbo, 2.3, 2.3 Turbo, 2.4 D, 2.4 TD Intercooler, 2.4 Turbo Diesel** 08/90 - 12/94 60 -140 kW	**34-002926**	**24-016629** OIO	without ride height adjustment; with independent wheel suspension

VOLVO 940 Kombi (945)

B4	**2.0, 2.0 GL, 2.0 Turbo, 2.3, 2.3 Turbo, 2.4 D, 2.4 TD Intercooler, 2.4 Turbo Diesel** 08/90 - 08/94 60 -140 kW	**21-030543** **11-103622** SP	**19-019888** OIO	without ride height adjustment; rigid axle
B4	**2.0, 2.0 GL, 2.0 Turbo, 2.3, 2.3 Turbo, 2.4 D, 2.4 TD Intercooler, 2.4 Turbo Diesel** 08/90 - 08/94 60 -140 kW	**21-030543** **11-103622** SP		with ride height adjustment; rigid axle
B6 Sport	**2.0, 2.0 GL, 2.0 Turbo, 2.3, 2.3 Turbo, 2.4 D, 2.4 TD Intercooler, 2.4 Turbo Diesel** 08/90 - 12/94 60 -140 kW	**34-002926**	**24-012744** OIO	without ride height adjustment; rigid axle
B6 Sport	**2.0, 2.0 GL, 2.0 Turbo, 2.3, 2.3 Turbo, 2.4 D, 2.4 TD Intercooler, 2.4 Turbo Diesel** 08/90 - 08/94 60 -140 kW	**34-002926**	**24-016629** OIO	without ride height adjustment; with independent wheel suspension

VOLVO 940 II (944)

B4	**2.0, 2.0 GLT, 2.0 Turbo, 2.3, 2.3 ti, 2.3 Turbo, 2.4 TD Interc.** 08/94 - 10/98 85 -139 kW	**21-030543** **11-103622** SP	**19-019888** OIO	without ride height adjustment; rigid axle
B4	**2.0, 2.0 GLT, 2.0 Turbo, 2.3, 2.3 ti, 2.3 Turbo, 2.4 TD Interc.** 08/94 - 10/98 85 -139 kW	**21-030543** **11-103622** SP		with ride height adjustment; rigid axle
B4	**2.3 Turbo** 01/95 - 12/98 126 kW	**21-030543** **11-103622** SP	**19-019888** OIO	without ride height adjustment; rigid axle
B4	**2.3 Turbo** 01/95 - 12/98 126 kW	**21-030543** **11-103622** SP		with ride height adjustment; rigid axle
B6 Sport	**2.0, 2.0 GLT, 2.0 Turbo, 2.3, 2.3 Turbo, 2.4 TD Interc.** 08/94 - 10/98 85 -139 kW	**34-002926**	**24-012744** OIO	without ride height adjustment; rigid axle
B6 Sport	**2.0, 2.0 GLT, 2.0 Turbo, 2.3, 2.3 Turbo** 08/94 - 10/98 85 -139 kW	**34-002926**	**24-016629** OIO	without ride height adjustment; with independent wheel suspension

V

VOLVO				
VOLVO 940 II (944)				
B6 Sport	**2.3 Turbo** 01/95 - 12/98 126 kW	**34-002926**	**24-012744** OIO	without ride height adjustment; rigid axle
VOLVO 940 II Estate (945)				
B4	**2.0, 2.0 GLT, 2.0 Turbo, 2.3, 2.3 ti, 2.3 Turbo, 2.4 TD Interc.** 08/94 - 10/98 85 -139 kW	**21-030543** **11-103622** SP	**19-019888** OIO	without ride height adjustment; rigid axle
B4	**2.0, 2.0 GLT, 2.0 Turbo, 2.3, 2.3 ti, 2.3 Turbo, 2.4 TD Interc.** 08/94 - 10/98 85 -139 kW	**21-030543** **11-103622** SP		with ride height adjustment; rigid axle
B6 Sport	**2.0, 2.0 GLT, 2.0 Turbo, 2.3, 2.3 ti, 2.3 Turbo, 2.4 TD Interc.** 08/94 - 10/98 85 -139 kW	**34-002926**	**24-012744** OIO	without ride height adjustment; rigid axle
B6 Sport	**2.0, 2.0 GLT, 2.0 Turbo, 2.3, 2.3 ti, 2.3 Turbo, 2.4 TD Interc.** 08/94 - 10/98 89 -139 kW	**34-002926**	**24-016629** OIO	without ride height adjustment; with independent wheel suspension
B6 Sport	**2.3** 08/90 - 12/94 85 kW	**34-002926**	**24-016629** OIO	without ride height adjustment; with independent wheel suspension
VOLVO 960 (964)				
B4	**2.0, 2.4 TD Interc., 2.9** 08/90 - 07/94 85 -150 kW	**21-030543** **11-103622** SP		with ride height adjustment; multilink axle
B6 Sport	**2.0, 2.9** 08/90 - 07/94 103 -150 kW	**34-002926**	**24-012744** OIO	without ride height adjustment
B6 Sport	**2.0, 2.9** 08/90 - 07/94 103 -150 kW	**34-002926**	**24-016629** OIO	without ride height adjustment; with independent wheel suspension
VOLVO 960 Kombi (965)				
B3	**2.4 TD Interc., 2.9** 08/90 - 07/94 85 -150 kW		**36-164301**	with standard chassis; without ride height adjustment
B3	**2.4 TD Interc., 2.9** 08/90 - 07/94 85 -150 kW		**36-218844**	with standard chassis; Heavy Duty Version .; without ride height adjustment
B3	**2.4 TD Interc., 2.9** 08/90 - 07/94 85 -150 kW		**36-218837**	with standard chassis; with ride height adjustment
B4	**2.0, 2.4 TD Interc., 2.4 Tdi, 2.8, 2.9** 08/90 - 07/94 85 -150 kW	**21-030543** **11-103622** SP		with ride height adjustment; rigid axle
B4	**2.0, 2.4 TD Interc., 2.4 Tdi, 2.8, 2.9** 08/90 - 07/94 85 -150 kW	**21-030543** **11-103622** SP	**19-019888** OIO	without ride height adjustment; rigid axle
B6 Sport	**2.0, 2.8, 2.9** 08/90 - 07/94 103 -150 kW	**34-002926**	**24-012744** OIO	without ride height adjustment
B6 Sport	**2.0, 2.8, 2.9** 08/90 - 07/94 103 -150 kW	**34-002926**	**24-016629** OIO	without ride height adjustment; with independent wheel suspension
VOLVO DUETT				
B6 Sport	**1.8** 08/61 - 07/67 50 kW	**24-060196** OIO		
VOLVO P 121				
B6 Sport	**1.6, 1.8, 2.0** 05/59 - 01/69 44 -60 kW	**24-002837**	**24-002936**	

V

VOLVO			
VOLVO P 122 S AMAZON			
B6 Sport **1.6, 1.8, 2.0** 05/59 - 05/71 59 -76 kW	**24-002837**	**24-002936**	
VOLVO P 122 S AMAZON Estate			
B6 Sport **1.8** 08/61 - 07/67 59 kW	**24-002837**		
VOLVO P 544			
B6 Sport **1.6, 1.8** 08/61 - 07/67 44 -61 kW	**24-060196**		
VOLVO P 1800			
B6 Sport **1.8, 1.8 S, 2.0 ES** 04/62 - 11/73 66 -91 kW	**24-002837**	**24-002936**	
VOLVO P 2200 Estate			
B6 Sport **1.8** 09/64 - 08/67 50 -63 kW	**24-002837**	**24-002936**	
CHANGAN VOLVO			
CHANGAN VOLVO S40 (MS)			
B4 **2.0, 2.4, 2.5** 06/06 - 107 -162 kW	**22-112811** (↰) **22-112880** (↱)	**19-119526**	
B6 Sport **2.0, 2.4, 2.5** 06/06 - 107 -162 kW	**35-110736** (↰) **35-110743** (↱)	**24-196529**	
B8 **2.0, 2.4, 2.5** 06/06 - 107 -162 kW	**35-110767** (↰) **35-110774** (↱)	**24-196550**	
B14 **2.0, 2.4, 2.5** 06/06 - 107 -162 kW	**47-121225**		Conditions see certificates VA: lowering (expertise): 35-50 mm; axle load to: 1100 kg HA: lowering (expertise): 35-50 mm; axle load to: 1090 kg
B16 PSS9 **2.0, 2.4, 2.5** 06/06 - 107 -162 kW	**48-121262**		Conditions see certificates VA: lowering (expertise): 35-50 mm; axle load to: 1100 kg HA: lowering (expertise): 35-50 mm; axle load to: 1090 kg
CHANGAN VOLVO S80L			
B4 **2.0 T, L 2.5** 03/09 - 147 -149 kW	**22-182869** (↰) **22-182876** (↱)	**19-170206**	without electronic suspension control; with standard chassis; with sports suspension; without ride height adjustment
B6 Sport **2.0 T, L 2.5** 03/09 - 147 -149 kW	**35-144960** (↰) **35-144977** (↱)	**24-143639**	with standard chassis; without electronic suspension control; without ride height adjustment
B8 **2.0 T, L 2.5** 03/09 - 147 -149 kW	**35-144984** (↰) **35-144991** (↱)	**24-143646**	without electronic suspension control; without ride height adjustment
VW			
VW AMAROK			
B6 Offroad **2.0 BiTDI, 2.0 BiTDI 4motion, 2.0 TDI, 2.0 TDI 4motion, 2.0 TSI** 09/10 - 90 -120 kW	**24-195690**	**24-195706**	

VW				
VW BEETLE				
B1	**1.2 TSI, 1.4 TSI, 1.6 TDI, 2.0 TDI, 2.0 TSI** 10/11 - 77 -147 kW		**12-224081**	HA: without ball bearing
B6 Sport	**1.2 TSI, 1.4 TSI, 1.6 TDI, 2.0 TDI, 2.0 TSI** 10/11 - 77 -147 kW	**35-108177**	**24-222181**	mark: 0N9 VA: Øa: 55 mm HA: rigid axle
B6 Sport	**1.2 TSI, 1.4 TSI, 1.6 TDI, 2.0 TDI, 2.0 TSI** 10/11 - 77 -147 kW	**35-108177**	**24-222198**	mark: 04N VA: Øa: 55 mm HA: multilink axle
B8	**1.2 TSI, 1.4 TSI, 1.6 TDI, 2.0 TDI, 2.0 TSI** 10/11 - 77 -147 kW	**35-108191**	**24-222181**	mark: 0N9 VA: Øa: 55 mm HA: rigid axle
B8	**1.2 TSI, 1.4 TSI, 1.6 TDI, 2.0 TDI, 2.0 TSI** 10/11 - 77 -147 kW	**35-108191**	**24-222198**	mark: 04N VA: Øa: 55 mm HA: multilink axle
VW BORA (1J2)				
B1	**1.4 16V, 1.6, 1.6 16V, 1.8, 1.8 T, 1.9 SDI, 1.9 TDI, 2.0, 2.3 V5** 10/98 - 05/05 50 -125 kW	**12-116966**	**12-117079**	VA: with ball bearing HA: -> 12/01; -> CH.Nr.: 1J-Y-530 000; Material: Aluminium
B1	**1.4 16V, 1.6, 1.6 16V, 1.6 FSI, 1.8, 1.8 T, 1.9 SDI, 1.9 TDI, 2.0, 2.3 V5** 10/98 - 05/05 50 -132 kW	**12-116966**	**12-117840**	VA: with ball bearing HA: 12/01 ->; CH.Nr.: 1J-Y-530 001 ->
B1	**1.8 4motion, 1.9 TDI 4motion, 2.0 4motion, 2.3 V5 4motion, 2.8 V6 4motion** 12/98 - 05/05 66 -150 kW	**12-116966**		VA: with ball bearing
B3	**1.4 16V** 03/00 - 05/05 55 kW	**37-131432**		with standard chassis; with AC
B3	**1.6, 1.6 16V, 1.6 FSI, 1.8, 1.8 T, 1.9 SDI, 2.0** 10/98 - 05/05 50 -132 kW	**37-131432**	**36-134137**	with standard chassis
B3	**1.6, 1.6 16V, 1.6 FSI, 1.8, 1.8 T, 1.9 TDI, 2.0, 2.3 V5** 10/98 - 05/05 66 -125 kW		**36-131297**	with standard chassis; Heavy Duty Version .
B3	**2.3 V5** 10/98 - 05/05 110 -125 kW	**37-155155**	**36-134137**	with standard chassis
B3	**1.9 TDI** 10/98 - 05/05 66 -110 kW	**37-131425**	**36-134137**	with standard chassis
B4	**1.4 16V, 1.6, 1.6 16V, 1.6 FSI, 1.8, 1.8 T, 1.9 SDI, 1.9 TDI, 2.0, 2.3 V5** 10/98 - 05/05 50 -132 kW	**22-045744** **11-103455** SP	**19-029429** **11-115755** SP	with standard chassis
B4	**1.4 16V, 1.6, 1.6 16V, 1.6 FSI, 1.8, 1.8 T, 1.9 SDI, 1.9 TDI, 2.0, 2.3 V5** 10/98 - 05/05 50 -132 kW	**22-045751** **11-103455** SP	**19-029177** **11-115755** SP	with sports suspension
B4	**1.4 16V, 1.6, 1.6 16V, 1.6 FSI, 1.8, 1.8 T, 1.9 SDI, 1.9 TDI, 2.0, 2.3 V5** 10/98 - 05/05 50 -132 kW	**22-045744** **11-103455** SP	**19-140032** **11-115755** SP	with off-road suspension
B4	**1.8 4motion, 1.9 TDI 4motion, 2.0 4motion, 2.3 V5 4motion, 2.8 V6 4motion** 12/98 - 05/05 66 -150 kW	**22-145550**		with standard chassis
B6 Sport	**1.4 16V, 1.6, 1.6 16V, 1.6 FSI, 1.8, 1.8 T, 1.9 SDI, 1.9 TDI, 2.0, 2.3 V5** 10/98 - 05/05 50 -132 kW	**35-044079**	**24-026239** **11-115755** SP	VA: Mono Tube Upside Down
B6 Sport	**1.8 4motion, 1.9 TDI 4motion, 2.0 4motion, 2.3 V5 4motion, 2.8 V6 4motion** 12/98 - 05/05 66 -150 kW	**35-046370**	**24-060349**	

VW

VW BORA (1J2)

B8	**1.4 16V, 1.6, 1.6 16V, 1.6 FSI, 1.8, 1.8 T, 1.9 SDI, 1.9 TDI, 2.0, 2.3 V5** 10/98 - 05/05 50 -132 kW	**35-044086**	**24-026246** **11-115755** SP	VA: Mono Tube Upside Down
B8	**1.8 4motion, 1.9 TDI 4motion, 2.0 4motion, 2.3 V5 4motion, 2.8 V6 4motion** 12/98 - 05/05 66 -150 kW	**35-046387**	**24-060356**	
B10	**1.4 16V, 1.6, 1.6 16V, 1.6 FSI, 1.8, 1.8 T, 1.9 SDI, 1.9 TDI, 2.0, 2.3 V5** 10/98 - 05/05 50 -132 kW	**46-111890**		Conditions see certificates VA: lowering (expertise): 55 mm; axle load to: 980 kg HA: lowering (expertise): 40 mm
B10	**1.4 16V, 1.6, 1.6 16V, 1.6 FSI, 1.8, 1.8 T, 1.9 SDI, 1.9 TDI, 2.0, 2.3 V5** 10/98 - 05/05 50 -132 kW	**46-111906**		Conditions see certificates VA: lowering (expertise): 55 mm; axle load from: 981 kg HA: lowering (expertise): 40 mm
B12 PK	**1.4 16V, 1.6, 1.6 16V, 1.6 FSI** 10/98 - 05/05 55 -81 kW	**46-180360**		Conditions see certificates VA: lowering (expertise): 30 mm; axle load to: 930 kg HA: without ride height adjustment; lowering (expertise): 30 mm; axle load to: 960 kg
B12 PK	**1.8, 1.9 SDI, 2.0** 10/98 - 05/05 50 -92 kW	**46-180377**		Conditions see certificates VA: lowering (expertise): 30 mm; axle load to: 970 kg HA: without ride height adjustment; lowering (expertise): 30 mm; axle load to: 960 kg
B12 PK	**1.8 4motion, 1.9 TDI 4motion, 2.0 4motion** 02/99 - 05/05 66 -110 kW	**46-180193**		Conditions see certificates VA: lowering (expertise): 30 mm; axle load to: 1030 kg HA: without ride height adjustment; lowering (expertise): 30 mm; axle load to: 1120 kg
B12 PK	**1.8 T** 05/00 - 05/05 110 -132 kW	**46-180384**		Conditions see certificates VA: lowering (expertise): 30 mm; axle load to: 1000 kg HA: without ride height adjustment; lowering (expertise): 30 mm; axle load to: 960 kg
B12 PK	**1.9 TDI** 10/98 - 06/01 66 -81 kW	**46-180377**		Conditions see certificates; manual transmission VA: lowering (expertise): 30 mm; axle load to: 970 kg HA: without ride height adjustment; lowering (expertise): 30 mm; axle load to: 960 kg
B12 PK	**1.9 TDI** 10/98 - 06/01 66 -81 kW	**46-180384**		Conditions see certificates; automatic transmission VA: lowering (expertise): 30 mm; axle load to: 1000 kg HA: without ride height adjustment; lowering (expertise): 30 mm; axle load to: 960 kg
B12 PK	**1.9 TDI 4motion, 2.3 V5 4motion, 2.8 V6 4motion** 12/98 - 05/05 66 -150 kW	**46-180209**		Conditions see certificates VA: lowering (expertise): 30 mm; axle load to: 1050 kg HA: without ride height adjustment; lowering (expertise): 30 mm; axle load to: 1120 kg
B12 PK	**1.9 TDI, 2.3 V5** 10/98 - 05/05 74 -110 kW	**46-180384**		Conditions see certificates; manual transmission VA: lowering (expertise): 30 mm; axle load to: 1000 kg HA: without ride height adjustment; lowering (expertise): 30 mm; axle load to: 960 kg
B12 PK	**1.9 TDI, 2.3 V5** 10/98 - 05/05 74 -110 kW	**46-180391**		Conditions see certificates; automatic transmission VA: lowering (expertise): 30 mm; axle load to: 1050 kg HA: without ride height adjustment; lowering (expertise): 30 mm; axle load to: 960 kg
B12 PK	**1.9 TDI, 2.3 V5** 10/00 - 05/05 96 -125 kW	**46-180391**		Conditions see certificates; manual transmission VA: lowering (expertise): 30 mm; axle load to: 1050 kg HA: without ride height adjustment; lowering (expertise): 30 mm; axle load to: 960 kg
B12 SL	**1.4 16V, 1.6, 1.6 16V, 1.6 FSI, 1.8, 1.8 T, 1.9 SDI, 1.9 TDI, 2.0** 10/98 - 05/05 50 -132 kW	**46-180308**		Conditions see certificates VA: lowering (expertise): 45-50 mm; axle load to: 950 kg HA: without ride height adjustment; lowering (expertise): 30-35 mm; axle load to: 1000 kg
B12 SL	**1.8, 1.8 T, 1.9 TDI, 2.0, 2.3 V5** 10/98 - 05/05 66 -132 kW	**46-180315**		Conditions see certificates VA: lowering (expertise): 45-50 mm; axle load to: 1000 kg HA: without ride height adjustment; lowering (expertise): 30-35 mm; axle load to: 1000 kg
B14	**1.4 16V, 1.6, 1.6 16V, 1.6 FSI, 1.8, 1.8 T, 1.9 SDI, 1.9 TDI, 2.0, 2.3 V5, 2.8 VR6** 11/98 - 07/05 50 -147 kW	**47-124851**		Spacers required for several wheel/tyre combinations; Conditions see certificates VA: lowering (expertise): 25-45 mm; axle load to: 1060 kg HA: lowering (expertise): 20-40 mm; axle load to: 1010 kg
B14	**1.8 4motion, 1.9 TDI 4motion, 2.0 4motion, 2.3 V5 4motion, 2.8 V6 4motion** 12/98 - 05/05 66 -150 kW	**47-080416**		Spacers required for several wheel/tyre combinations; Conditions see certificates VA: lowering (expertise): 30-50 mm; axle load to: 1110 kg HA: lowering (expertise): 30-50 mm; axle load to: 1080 kg

V

VW

VW BORA (1J2)

B16 PSS9	**1.4 16V, 1.6, 1.6 16V, 1.6 FSI, 1.8, 1.8 T, 1.9 SDI, 1.9 TDI, 2.0, 2.3 V5, 2.8 VR6** 11/98 - 07/05 50 -147 kW	**48-080651**		Spacers required for several wheel/tyre combinations; Conditions see certificates VA: lowering (expertise): 25-45 mm; axle load to: 1060 kg HA: lowering (expertise): 25-45 mm; axle load to: 1010 kg
B16 PSS9	**1.8 4motion, 1.9 TDI 4motion, 2.0 4motion, 2.3 V5 4motion, 2.8 V6 4motion** 12/98 - 05/05 66 -150 kW	**48-080422**		Spacers required for several wheel/tyre combinations; Conditions see certificates VA: lowering (expertise): 30-50 mm; axle load to: 1110 kg HA: lowering (expertise): 30-50 mm; axle load to: 1080 kg

VW BORA Estate (1J6)

B1	**1.4 16V, 1.6, 1.6 16V, 1.8 T, 1.9 TDI, 2.0, 2.3 V5, 2.8 VR6** 03/00 - 12/01 55 -150 kW	**12-116966**	**12-117079**	-> CH.Nr.: 1J-Y-530 000 VA: with ball bearing HA: without ball bearing; Material: Rubber/Metal; Material: Aluminium
B1	**1.4 16V, 1.6, 1.6 16V, 1.6 FSI, 1.8 T, 1.9 TDI, 2.0, 2.3 V5** 12/01 - 05/05 55 -132 kW	**12-116966**	**12-117840**	CH.Nr.: 1J-Y-530 001 -> VA: with ball bearing
B1	**1.8 4motion, 1.9 TDI 4motion, 2.0 4motion, 2.3 V5 4motion, 2.8 V6 4motion** 05/99 - 05/05 74 -150 kW	**12-116966**		VA: with ball bearing
B3	**1.4 16V** 09/01 - 05/05 55 kW	**37-131432**		with standard chassis; with AC
B3	**1.6, 1.6 16V, 1.6 FSI, 2.0** 05/99 - 05/05 74 -85 kW	**37-134129**	**36-131297**	with standard chassis
B3	**1.6, 1.6 16V, 1.6 FSI, 1.8 T, 1.9 TDI, 2.0** 05/99 - 05/05 66 -132 kW		**36-155101**	with standard chassis; Heavy Duty Version .
B3	**1.8 T, 1.9 TDI, 2.3 V5, 2.8 VR6** 03/00 - 05/05 66 -150 kW	**37-131425**	**36-131297**	with standard chassis
B4	**1.4 16V, 1.6, 1.6 16V, 1.6 FSI, 1.8 T, 1.9 TDI, 2.0, 2.3 V5, 2.8 VR6** 03/00 - 05/05 55 -150 kW	**22-045744** **11-103455** SP	**19-068633** **11-115755** SP	with standard chassis
B4	**1.4 16V, 1.6, 1.6 16V, 1.6 FSI, 1.8 T, 1.9 TDI, 2.0, 2.3 V5, 2.8 VR6** 03/00 - 05/05 55 -150 kW	**22-045751** **11-103455** SP		with sports suspension
B4	**1.4 16V, 1.6, 1.6 16V, 1.6 FSI, 1.8 T, 1.9 TDI, 2.0, 2.3 V5, 2.8 VR6** 03/00 - 05/05 55 -150 kW	**22-045744** **11-103455** SP	**19-140032** **11-115755** SP	with off-road suspension
B4	**1.8 4motion, 1.9 TDI 4motion, 2.0 4motion, 2.3 V5 4motion, 2.8 V6 4motion** 05/99 - 05/05 74 -150 kW	**22-145550**		with standard chassis
B6 Sport	**1.4 16V, 1.6, 1.6 16V, 1.6 FSI, 1.8 T, 1.9 TDI, 2.0, 2.3 V5, 2.8 VR6** 03/00 - 05/05 55 -150 kW	**35-044079**	**24-064095** **11-115755** SP	VA: Mono Tube Upside Down
B6 Sport	**1.8 4motion, 1.9 TDI 4motion, 2.0 4motion, 2.3 V5 4motion, 2.8 V6 4motion** 05/99 - 05/05 74 -150 kW	**35-046370**	**24-060349**	
B8	**1.4 16V, 1.6, 1.6 16V, 1.6 FSI, 1.8 T, 1.9 TDI, 2.0, 2.3 V5, 2.8 VR6** 03/00 - 05/05 55 -150 kW	**35-044086**	**24-064101** **11-115755** SP	VA: Mono Tube Upside Down
B8	**1.8 4motion, 1.9 TDI 4motion, 2.0 4motion, 2.3 V5 4motion, 2.8 V6 4motion** 05/99 - 05/05 74 -150 kW	**35-046387**	**24-060356**	
B10	**1.4 16V, 1.6, 1.6 16V, 1.6 FSI, 1.8 T, 1.9 TDI, 2.0, 2.3 V5, 2.8 VR6** 03/00 - 05/05 55 -150 kW	**46-111944**		Conditions see certificates VA: lowering (expertise): 55 mm; axle load to: 980 kg HA: lowering (expertise): 40 mm

V

VW				
VW BORA Estate (1J6)				
B10	**1.4 16V, 1.6, 1.6 16V, 1.6 FSI, 1.8 T, 1.9 TDI, 2.0, 2.3 V5, 2.8 VR6** 03/00 - 05/05 55 -150 kW	**46-111937**		Conditions see certificates VA: lowering (expertise): 55 mm; axle load to: 1020 kg; axle load from: 981 kg HA: lowering (expertise): 40 mm
B12 PK	**1.4 16V, 1.6, 1.6 16V, 1.6 FSI** 02/00 - 05/05 55 -81 kW	**46-180407**		Conditions see certificates VA: lowering (expertise): 30 mm; axle load to: 930 kg HA: without ride height adjustment; lowering (expertise): 30 mm; axle load to: 1020 kg
B12 PK	**1.8 4motion, 1.9 TDI 4motion, 2.0 4motion** 05/99 - 05/05 74 -110 kW	**46-180193**		Conditions see certificates VA: lowering (expertise): 30 mm; axle load to: 1030 kg HA: without ride height adjustment; lowering (expertise): 30 mm; axle load to: 1120 kg
B12 PK	**1.8 T** 05/00 - 05/05 110 -132 kW	**46-180421**		Conditions see certificates VA: lowering (expertise): 30 mm; axle load to: 1000 kg HA: without ride height adjustment; lowering (expertise): 30 mm; axle load to: 1020 kg
B12 PK	**2.0** 05/99 - 05/05 85 kW	**46-180414**		Conditions see certificates VA: lowering (expertise): 30 mm; axle load to: 970 kg HA: without ride height adjustment; lowering (expertise): 30 mm; axle load to: 1020 kg
B12 PK	**1.9 TDI** 05/99 - 05/05 66 -81 kW	**46-180421**		Conditions see certificates; automatic transmission VA: lowering (expertise): 30 mm; axle load to: 1000 kg HA: without ride height adjustment; lowering (expertise): 30 mm; axle load to: 1020 kg
B12 PK	**1.9 TDI** 05/99 - 05/05 66 -81 kW	**46-180414**		Conditions see certificates; manual transmission VA: lowering (expertise): 30 mm; axle load to: 970 kg HA: without ride height adjustment; lowering (expertise): 30 mm; axle load to: 1020 kg
B12 PK	**1.9 TDI, 2.3 V5** 05/99 - 05/05 74 -110 kW	**46-180438**		Conditions see certificates; automatic transmission VA: lowering (expertise): 30 mm; axle load to: 1050 kg HA: without ride height adjustment; lowering (expertise): 30 mm; axle load to: 1020 kg
B12 PK	**1.9 TDI, 2.3 V5** 05/99 - 05/05 74 -110 kW	**46-180421**		Conditions see certificates; manual transmission VA: lowering (expertise): 30 mm; axle load to: 1000 kg HA: without ride height adjustment; lowering (expertise): 30 mm; axle load to: 1020 kg
B12 PK	**1.9 TDI 4motion, 2.3 V5 4motion, 2.8 V6 4motion** 05/99 - 05/05 74 -150 kW	**46-180209**		Conditions see certificates VA: lowering (expertise): 30 mm; axle load to: 1050 kg HA: without ride height adjustment; lowering (expertise): 30 mm; axle load to: 1120 kg
B12 PK	**1.9 TDI, 2.3 V5** 10/00 - 05/05 96 -125 kW	**46-180438**		Conditions see certificates; manual transmission VA: lowering (expertise): 30 mm; axle load to: 1050 kg HA: without ride height adjustment; lowering (expertise): 30 mm; axle load to: 1020 kg
VW CADDY I (14)				
B1	**1.5, 1.6, 1.6 D, 1.8** 08/82 - 07/92 40 -70 kW	**12-117369**		VA: Material: Rubber/Metal; with spacer tube
B3	**1.5, 1.6, 1.8** 08/82 - 07/92 51 -70 kW	**36-160358**		with standard chassis
B3	**1.5, 1.6, 1.8** 08/82 - 07/92 51 -70 kW	**36-134199**		with standard chassis; Heavy Duty Version .
B3	**1.6 D** 08/82 - 07/92 40 kW	**36-134199**		with standard chassis
B4	**1.5, 1.6, 1.6 D, 1.8** 08/82 - 07/92 40 -70 kW	i.V. **21-030338** **11-101291** SP		VA: for bolted struts only
B6 Sport	**1.5, 1.6, 1.6 D, 1.8** 08/82 - 07/92 40 -70 kW	**34-001370**	**24-027618**	VA: for bolted struts only
VW CADDY II Estate (9K9B)				
B1	**1.4, 1.4 16V, 1.6, 1.6 GLS, 1.7 SDI, 1.9 D, 1.9 SDI, 1.9 TDI** 11/95 - 01/04 42 -66 kW	**12-117659**		VA: with ball bearing

V

VW				
VW CADDY II Estate (9K9B)				
B2	**1.4, 1.4 16V, 1.6, 1.6 GLS, 1.7 SDI, 1.9 D, 1.9 SDI, 1.9 TDI** 11/95 - 01/04 42 -66 kW	**17-104029** **11-101307** SP	**15-106384** OIO	
B3	**1.4, 1.4 16V, 1.6, 1.6 GLS, 1.7 SDI, 1.9 D, 1.9 SDI, 1.9 TDI** 11/95 - 01/04 42 -66 kW	**36-203130**		with standard chassis
B4	**1.4, 1.4 16V, 1.6, 1.6 GLS, 1.7 SDI, 1.9 D, 1.9 SDI, 1.9 TDI** 11/95 - 01/04 42 -66 kW	**22-044761** **11-101307** SP	**19-106397** OIO	
VW CADDY II Box (9K9A)				
B1	**1.4, 1.7 SDI, 1.9 D, 1.9 SDI, 1.9 TDI, 60 1.4, 75 1.6** 11/95 - 01/04 42 -66 kW	**12-117659**		VA: with ball bearing
B2	**1.4, 1.7 SDI, 1.9 D, 1.9 SDI, 1.9 TDI, 60 1.4, 75 1.6** 11/95 - 01/04 42 -66 kW	**17-104029** **11-101307** SP	**15-106384** OIO	
B3	**1.4, 75 1.6** 11/95 - 01/04 55 kW	**36-203130**	**36-134250**	with standard chassis
B3	**1.7 SDI, 1.9 D, 1.9 SDI, 1.9 TDI** 11/95 - 01/04 42 -66 kW	**36-203130**	**36-131297**	with standard chassis
B4	**1.4, 1.7 SDI, 1.9 D, 1.9 SDI, 1.9 TDI, 60 1.4, 75 1.6** 11/95 - 01/04 42 -66 kW	**22-044761** **11-101307** SP	**19-106397** OIO	
VW CADDY II Pickup (9U7)				
B1	**1.6, 1.9 D** 06/96 - 12/00 47 -55 kW	**12-117659**		VA: with ball bearing
B2	**1.6, 1.9 D** 06/96 - 12/00 47 -55 kW	**17-104029** **11-101307** SP		
B3	**1.6, 1.9 D** 06/96 - 12/00 47 -55 kW	**36-213962**	**36-213931**	with standard chassis
B4	**1.6, 1.9 D** 06/96 - 12/00 47 -55 kW	**22-044761** **11-101307** SP		
VW CADDY III Estate (2KB, 2KJ)				
B1	**1.2 TSI, 1.4, 1.4 16V, 1.6, 1.6 TDI, 1.9 TDI, 2.0 SDI, 2.0 TDI, 2.0 TDI 16V** 09/07 - 51 -125 kW	**12-224074**		VA: with ball bearing
B3	**1.2 TSI, 1.4, 1.4 16V, 1.6** 04/04 - 55 -77 kW	**37-148102**		with standard chassis
B3	**1.2 TSI, 1.4, 1.4 16V, 1.6** 04/04 - 55 -77 kW	**37-148119**		with standard chassis; Heavy Duty Version .
B3	**1.6 TDI, 1.9 TDI, 2.0 SDI, 2.0 TDI, 2.0 TDI 16V** 09/07 - 51 -125 kW	**37-148119**		with standard chassis
B4	**1.2 TSI, 1.4, 1.4 16V, 1.6, 1.6 TDI, 1.9 TDI, 2.0 SDI, 2.0 TDI, 2.0 TDI 16V** 09/07 - 51 -125 kW	**22-131607** **11-103455** SP	**19-142449** OIO	with standard chassis VA: Øa: 50 mm; mark: G02
B4	**1.2 TSI, 1.4, 1.4 16V, 1.6, 1.6 TDI, 1.9 TDI, 2.0 SDI, 2.0 TDI, 2.0 TDI 16V** 09/07 - 51 -125 kW	**22-131614** **11-103455** SP	**19-142449** OIO	with standard chassis VA: Øa: 55 mm; mark: G07,G08

VW				
VW CADDY III Estate (2KB, 2KJ)				
B4	**1.6 BiFuel, 2.0 EcoFuel** 04/06 - 75 -80 kW	**22-131607** **11-103455** SP		with standard chassis VA: Øa: 50 mm; mark: G02
B4	**1.6 BiFuel, 2.0 EcoFuel** 04/06 - 75 -80 kW	**22-131614** **11-103455** SP		with standard chassis VA: Øa: 55 mm; mark: G07,G08
VW CADDY III Box (2KA, 2KH, 2CA, 2CH)				
B1	**1.4, 1.4 16V, 1.6, 1.6 TDI, 1.9 TDI, 2.0 SDI, 2.0 TDI, 2.0 TDI 16V** 03/04 - 51 -125 kW	**12-224074**		VA: with ball bearing
B3	**1.4, 1.4 16V, 1.6** 03/04 - 55 -75 kW	**37-148102**		with standard chassis
B3	**1.4, 1.4 16V, 1.6** 03/04 - 55 -75 kW	**37-148119**		with standard chassis; Heavy Duty Version .
B3	**1.6 TDI, 1.9 TDI, 2.0 SDI, 2.0 TDI, 2.0 TDI 16V** 09/07 - 51 -125 kW	**37-148119**		with standard chassis
B4	**1.4, 1.4 16V, 1.6, 1.6 TDI, 1.9 TDI, 2.0 SDI, 2.0 TDI, 2.0 TDI 16V** 03/04 - 51 -125 kW	**22-131607** **11-103455** SP	**19-142449**	with standard chassis VA: Øa: 50 mm; mark: G02
B4	**1.4, 1.4 16V, 1.6, 1.6 TDI, 1.9 TDI, 2.0 SDI, 2.0 TDI, 2.0 TDI 16V** 03/04 - 51 -125 kW	**22-131614** **11-103455** SP	**19-142449**	with standard chassis VA: Øa: 55 mm; mark: G07,G08
B4	**1.6 BiFuel, 2.0 EcoFuel** 04/06 - 75 -80 kW	**22-131607** **11-103455** SP		with standard chassis VA: Øa: 50 mm; mark: G02
B4	**1.6 BiFuel, 2.0 EcoFuel** 04/06 - 75 -80 kW	**22-131614** **11-103455** SP		with standard chassis VA: Øa: 55 mm; mark: G07,G08
VW CORRADO (53I)				
B1	**1.8 16V, 1.8 G60, 2.0 i, 2.0 i 16V, 2.9 VR6** 09/88 - 12/95 85 -140 kW	**12-116775**	**12-117239**	VA: Øi: 14 mm; Øa: 126 mm; Material: Rubber/Metal; with ball bearing
B3	**1.8 16V, 1.8 G60, 2.0 i, 2.0 i 16V, 2.9 VR6** 09/88 - 12/95 85 -140 kW	**36-160563**		with standard chassis
B4	**1.8 16V, 1.8 G60, 2.0 i, 2.0 i 16V** 09/88 - 12/95 85 -118 kW	**22-041234** **11-101291** SP	**19-019963** **11-101352** SP	
B4	**2.9 VR6** 08/91 - 12/95 140 kW	**22-045027** **11-101291** SP		
B6 Sport	**1.8 16V, 1.8 G60, 2.0 i 16V** 09/89 - 06/93 100 -118 kW	**35-002147**	**24-014175** **11-101352** SP	for vehicles with "Basisachse" only
B6 Sport	**2.0 i, 2.0 i 16V** 06/93 - 12/95 85 -100 kW	**35-043911** **11-101291** SP	**24-014175**	twin-tube
B6 Sport	**2.0 i, 2.0 i 16V** 06/93 - 12/95 85 -100 kW	**35-043911**	**24-014175**	mono-tube
B6 Sport	**2.9 VR6** 08/91 - 12/95 140 kW	**35-043911**	**24-015295** **11-101352** SP	mono-tube
B6 Sport	**2.9 VR6** 08/91 - 12/95 140 kW	**35-043911** **11-101291** SP	**24-015295** **11-101352** SP	twin-tube
B8	**1.8 16V, 1.8 G60, 2.0 i, 2.0 i 16V** 09/89 - 06/93 85 -118 kW	**35-003878**	**24-015530** **11-101352** SP	for vehicles with "Basisachse" only

V

VW				
VW CORRADO (53I)				
B8	**2.0 i, 2.0 i 16V** 06/93 - 12/95 85 -100 kW	**35-043928**	**24-015530**	for vehicles with "Plusachse" only; mono-tube
B8	**2.9 VR6** 08/91 - 12/95 140 kW	**35-043928**	**24-015530**	for vehicles with "Plusachse" only; mono-tube
B8	**2.9 VR6** 08/91 - 12/95 140 kW	**11-101291** SP	**24-015530**	for vehicles with "Plusachse" only; twin-tube
B12 PK	**1.8 16V, 1.8 G60, 2.0 i, 2.0 i 16V, 2.9 VR6** 09/88 - 12/95 85 -140 kW	**46-190093**		for vehicles with "Basisachse" only; Conditions see certificates VA: lowering (expertise): 25-30 mm; axle load to: 950 kg HA: lowering (expertise): 25 mm; axle load to: 710 kg
B12 PK	**1.8 16V, 1.8 G60, 2.0 i, 2.0 i 16V, 2.9 VR6** 09/88 - 12/95 85 -140 kW	**46-190109**		for vehicles with "Plusachse" only; Conditions see certificates VA: lowering (expertise): 25-30 mm; axle load to: 950 kg HA: lowering (expertise): 25 mm; axle load to: 710 kg
B14	**1.8 16V, 1.8 G60, 2.0 i, 2.0 i 16V, 2.9 VR6** 09/88 - 12/95 85 -140 kW	**47-124844**		Spacers required for several wheel/tyre combinations; Conditions see certificates VA: lowering (expertise): 30-50 mm; axle load to: 950 kg HA: lowering (expertise): 0-10 mm; axle load to: 710 kg
B16 PSS9	**1.8 16V, 1.8 G60, 2.0 i, 2.0 i 16V, 2.9 VR6** 09/88 - 12/95 85 -140 kW	**48-080569**		Spacers required for several wheel/tyre combinations; Conditions see certificates VA: lowering (expertise): 30-50 mm; axle load to: 950 kg HA: lowering (expertise): 0-10 mm; axle load to: 710 kg
MS	**1.8 16V, 1.8 G60, 2.0 i, 2.0 i 16V, 2.9 VR6** 09/88 - 12/95 85 -140 kW	*35-044062*	*24-224024*	HA: charakteristic: 300/120; with unibal joint bearing
VW DERBY (86)				
B1	**0.9, 1.1, 1.3** 02/77 - 09/81 29 -44 kW	**12-117383**		
B3	**0.9, 1.1, 1.3** 02/77 - 09/81 29 -44 kW	*36-134151*	**36-131051**	with standard chassis
B4	**0.9, 1.1, 1.3** 02/77 - 09/81 29 -44 kW	**21-030345**	**19-019642** **11-101390** SP	
B6 Sport	**0.9, 1.1, 1.3** 02/77 - 09/81 29 -44 kW	**34-000175**	**24-181495**	
B8	**0.9, 1.1, 1.3** 02/77 - 09/81 29 -44 kW	**34-030011**	**24-016193**	
VW DERBY (86C, 80)				
B1	**1.0, 1.1, 1.3** 08/81 - 12/84 29 -55 kW	**12-117383**		
B3	**1.0, 1.1, 1.3** 08/81 - 12/84 29 -44 kW	**36-130948**	**36-131051**	with standard chassis
B3	**1.3** 09/82 - 12/84 55 kW	**36-134342**	**36-131051**	with standard chassis
B4	**1.0, 1.1, 1.3** 08/81 - 12/84 29 -55 kW	**21-030345**	**19-019642** **11-101390** SP	
B6 Sport	**1.0, 1.1, 1.3** 08/81 - 12/84 29 -55 kW	**34-000175**	**24-181495**	
B8	**1.0, 1.1, 1.3** 08/81 - 12/84 29 -55 kW	**34-030011**	**24-016193**	

V

VW			
VW EOS (1F7)			
B1 **1.4 TSI, 1.6 FSI, 2.0 FSI, 2.0 TDI, 2.0 TDI 16V, 2.0 TFSI, 2.0 TSI, 3.2 V6, 3.6 V6** 06/06 - 85 -191 kW	**12-224074**	**12-224081**	VA: with ball bearing HA: without ball bearing
B4 **1.4 TSI, 1.6 FSI, 2.0 FSI, 2.0 TDI, 2.0 TDI 16V, 2.0 TFSI, 2.0 TSI, 3.2 V6, 3.6 V6** 06/06 - 85 -191 kW	**22-131614**	**19-164915**	with standard chassis VA: Øa: 55 mm
B6 Sport **1.4 TSI, 1.6 FSI, 2.0 FSI, 2.0 TDI, 2.0 TDI 16V, 2.0 TFSI, 2.0 TSI, 3.2 V6, 3.6 V6** 06/06 - 85 -191 kW	**35-108177**	**24-137867**	VA: Øa: 55 mm
B8 **1.4 TSI, 1.6 FSI, 2.0 FSI, 2.0 TDI, 2.0 TDI 16V, 2.0 TFSI, 2.0 TSI, 3.2 V6, 3.6 V6** 06/06 - 85 -191 kW	**35-108191**	**24-137874**	VA: Øa: 55 mm
B12 PK **1.4 TSI, 1.6 FSI** 06/06 - 85 -118 kW	**46-184351**		Conditions see certificates VA: lowering (expertise): 25 mm; axle load to: 1010 kg HA: without ride height adjustment; lowering (expertise): 25 mm; axle load to: 1000 kg
B12 PK **1.4 TSI, 2.0 FSI, 2.0 TDI, 2.0 TDI 16V, 2.0 TFSI, 2.0 TSI** 03/06 - 90 -155 kW	**46-184368**		Conditions see certificates VA: lowering (expertise): 25 mm; axle load to: 1080 kg HA: without ride height adjustment; lowering (expertise): 25 mm; axle load to: 1000 kg
B12 PK **3.6 V6** 05/09 - 191 kW	**46-184375**		Conditions see certificates VA: lowering (expertise): 25 mm; axle load to: 1130 kg HA: without ride height adjustment; lowering (expertise): 25 mm; axle load to: 1000 kg
B12 PK **2.0 TDI, 2.0 TDI 16V, 2.0 TFSI, 3.2 V6** 06/06 - 100 -184 kW	**46-184375**		with DSG; Conditions see certificates VA: lowering (expertise): 25 mm; axle load to: 1130 kg HA: without ride height adjustment; lowering (expertise): 25 mm; axle load to: 1000 kg
B14 **1.4 TSI, 1.6 FSI, 2.0 FSI, 2.0 TDI, 2.0 TDI 16V, 2.0 TFSI, 2.0 TSI, 3.2 V6, 3.6 V6** 06/06 - 85 -191 kW	**47-140868**		Conditions see certificates VA: lowering (expertise): 30-50 mm; axle load to: 1190 kg HA: lowering (expertise): 30-50 mm; axle load to: 1060 kg
B16 PSS9 **1.4 TSI, 1.6 FSI, 2.0 FSI, 2.0 TDI, 2.0 TDI 16V, 2.0 TFSI, 2.0 TSI, 3.2 V6, 3.6 V6** 06/06 - 85 -191 kW	**48-139137**		Conditions see certificates VA: lowering (expertise): 30-50 mm; axle load to: 1190 kg HA: lowering (expertise): 30-50 mm; axle load to: 1060 kg
VW FOX (5Z1)			
B1 **1.2, 1.4, 1.4 TDI** 04/05 - 40 -55 kW	**12-224395**		VA: with ball bearing; for PR number: G09, G10
B3 **1.2, 1.4, 1.6** 10/03 - 40 -74 kW	**37-160678**	**36-160716**	with standard chassis
B3 **1.2, 1.4, 1.6** 10/03 - 40 -74 kW	**37-160654**	**36-200108**	with standard chassis; Heavy Duty Version .
B3 **1.4 TDI, 1.9 D** 04/05 - 47 -51 kW	**37-160654**	**36-200108**	with standard chassis
B4 **1.0, 1.0 Alcohol, 1.0 Total Flex, 1.2, 1.4, 1.4 TDI, 1.6, 1.6 Alcohol, 1.6 Total Flex, 1.9 D** 10/03 - 40 -76 kW	**22-105813**	**19-156699**	with standard chassis
VW GOLF I (17)			
B1 **1.1, 1.3, 1.5, 1.5 D, 1.6, 1.6 D, 1.6 GTI, 1.6 TD, 1.8 GTI** 04/74 - 12/83 37 -82 kW	**12-117369**		VA: Material: Rubber/Metal; with spacer tube

V

VW				
VW GOLF I (17)				
B3	**1.1, 1.5, 1.6** 04/74 - 02/84 37 -55 kW	**36-131105**	**36-131068**	with standard chassis
B3	**1.1, 1.3, 1.5, 1.5 D, 1.6, 1.6 D, 1.6 GTI, 1.6 TD, 1.8 GTI** 04/74 - 12/83 37 -82 kW		**36-155095**	with standard chassis; Heavy Duty Version .
B3	**1.1, 1.3** 08/79 - 12/83 38 -44 kW	**36-131105**	**36-131068**	with standard chassis
B3	**1.5** 08/77 - 07/83 51 kW		**36-131068**	with standard chassis
B3	**1.5 D** 08/76 - 07/80 37 kW	*36-134175*	**36-131068**	with standard chassis
B3	**1.6 D, 1.6 GTI, 1.6 TD, 1.8 GTI** 08/76 - 12/83 40 -82 kW	**36-131105**	*36-134182*	with standard chassis
B4	**1.1, 1.3, 1.5, 1.5 D, 1.6, 1.6 D, 1.6 GTI, 1.6 TD, 1.8 GTI** 04/74 - 12/83 37 -82 kW	i.V. **21-030338** **11-101307** SP	**19-019550** **11-101345** SP	VA: for bolted struts only
B6 Sport	**1.1, 1.3, 1.5, 1.5 D, 1.6, 1.6 D, 1.6 GTI, 1.6 TD, 1.8 GTI** 04/74 - 12/83 37 -82 kW	**34-001370**	**24-008372** **11-101345** SP	VA: for bolted struts only
B8	**1.1, 1.3, 1.5, 1.5 D, 1.6, 1.6 D, 1.6 GTI, 1.6 TD, 1.8 GTI** 04/74 - 12/83 37 -82 kW	**34-001370**	**24-015141** **11-101345** SP	VA: for bolted struts only
B12 PK	**1.1, 1.3, 1.5, 1.5 D, 1.6, 1.6 D, 1.6 GTI, 1.6 TD, 1.6 TD CL, 1.8 GTI** 04/74 - 12/83 37 -82 kW	**46-189868**		for bolted struts only; Conditions see certificates VA: lowering (expertise): 30-40 mm; axle load to: 785 kg HA: lowering (expertise): 30-35 mm; axle load to: 630 kg
MS	**1.1, 1.3, 1.5, 1.5 D, 1.6, 1.6 D, 1.6 GTI, 1.6 TD, 1.8 GTI** 04/74 - 12/83 37 -82 kW		*24-006576*	mark: Rally Gruppe N HA: charakteristic: 208/73
MS	**1.1, 1.3, 1.5, 1.5 D, 1.6, 1.6 D, 1.6 GTI, 1.6 TD, 1.6 TD CL, 1.8 GTI** 04/74 - 12/83 37 -82 kW	*35-603207*		mark: Rennen Gruppe A
VW GOLF I Cabriolet (155)				
B1	**1.3, 1.5, 1.6, 1.8** 08/82 - 12/89 40 -82 kW	**12-117369**		VA: Material: Rubber/Metal; with spacer tube
B3	**1.5, 1.6, 1.8** 01/79 - 12/89 51 -82 kW	**36-134243**	**36-155095**	with standard chassis
B3	**1.5, 1.6, 1.8** 01/79 - 12/89 51 -82 kW	**36-160358**		with standard chassis; Heavy Duty Version .
B4	**1.3, 1.5, 1.6, 1.8** 08/82 - 12/89 40 -82 kW	i.V. **21-030338** **11-101307** SP	**19-019550** **11-101345** SP	VA: for bolted struts only
B6 Sport	**1.3, 1.5, 1.6, 1.8** 08/82 - 12/89 40 -82 kW	**34-001370**	**24-008372** **11-101345** SP	VA: for bolted struts only
B8	**1.3, 1.5, 1.6, 1.8** 08/82 - 12/89 40 -82 kW	**34-001370**	**24-015141** **11-101345** SP	VA: for bolted struts only
B12 PK	**1.5, 1.6, 1.8** 01/79 - 12/89 51 -82 kW	**46-189943**		for bolted struts only; Conditions see certificates VA: lowering (expertise): 30-40 mm; axle load to: 785 kg HA: lowering (expertise): 30-35 mm; axle load to: 630 kg

V

VW				
VW GOLF II (19E, 1G1)				
B1	**1.0, 1.3, 1.3 CAT, 1.6, 1.6 D, 1.6 G, 1.6 TD, 1.6 TD CL, 1.8, 1.8 Syncro, 1.8 GTI, 1.8 GTI 16V, 1.8 GTI CAT, 1.8 GTI G60, 1.8 GTI G60 Syncro, 1.8 i CAT, 1.8 i Syncro CAT, 2.0** 01/84 - 07/92 33 -118 kW	**12-117963**	**12-117239**	VA: with ball bearing
B2	**1.0, 1.3, 1.3 CAT, 1.6, 1.6 D, 1.6 G, 1.6 TD, 1.6 TD CL, 1.8, 1.8 i CAT, 2.0** 08/83 - 07/92 33 -66 kW	**17-047142** **16-031456** **11-101291** SP	**15-062192** **11-101352** SP	VA: for bolted struts only
B2	**1.8 Syncro, 1.8 i Syncro CAT** 02/86 - 10/91 66 -72 kW	**16-031456** **17-047142** **11-101291** SP		not for: Country VA: for bolted struts only
B3	**1.3, 1.3 CAT, 1.6, 1.6 G, 1.8, 1.8 i CAT** 08/84 - 10/91 37 -66 kW	**36-130665**	**36-130702**	with standard chassis
B3	**1.8 GTI, 1.8 GTI CAT** 08/83 - 10/91 77 -82 kW	**36-134199**	**36-130702**	with standard chassis
B3	**1.6 D, 1.6 TD, 1.6 TD CL** 08/83 - 10/91 37 -59 kW	**36-130696**	**36-130702**	with standard chassis
B4	**1.0, 1.3, 1.3 CAT, 1.6, 1.6 D, 1.6 G, 1.6 TD, 1.6 TD CL, 1.8, 1.8 GTI, 1.8 GTI CAT, 1.8 i CAT, 2.0** 08/83 - 07/92 33 -82 kW	**21-030468** **22-041142** **11-101291** SP	**19-019741** **11-101352** SP	VA: for bolted struts only
B4	**1.0, 1.3, 1.3 CAT, 1.6, 1.6 D, 1.6 G, 1.6 TD, 1.6 TD CL, 1.8, 1.8 i CAT, 2.0** 08/83 - 07/92 33 -66 kW		**19-124681** **11-101352** SP	with off-road suspension
B4	**1.8 Syncro, 1.8 GTI G60 Syncro, 1.8 i Syncro CAT** 02/86 - 10/91 66 -118 kW	**22-041142** **21-030468** **11-101291** SP		not for: Country VA: for bolted struts only
B4	**1.8 GTI 16V, 1.8 GTI G60** 02/86 - 10/91 95 -118 kW	**22-041142** **21-030468** **11-101291** SP	**19-019963** **11-101352** SP	VA: for bolted struts only
B6 Sport	**1.0, 1.3, 1.3 CAT, 1.6, 1.6 D, 1.6 G, 1.6 TD, 1.6 TD CL, 1.8, 1.8 GTI, 1.8 GTI 16V, 1.8 GTI CAT, 1.8 GTI G60, 1.8 i CAT, 2.0** 08/83 - 07/92 33 -118 kW	**35-181590** **34-001028**	**24-006569** **11-101352** SP	VA: for bolted struts only
B6 Sport	**1.8 Syncro, 1.8 GTI G60 Syncro, 1.8 i Syncro CAT** 02/86 - 10/91 66 -118 kW	**35-043911**	**24-629485**	not for: Country
B6 Sport	**1.8 GTI, 1.8 GTI 16V, 1.8 GTI CAT, 1.8 GTI G60** 08/83 - 07/91 77 -118 kW	**35-181590**	**24-006569**	
B8	**1.0, 1.3, 1.3 CAT, 1.6, 1.6 D, 1.6 G, 1.6 TD, 1.6 TD CL, 1.8, 1.8 GTI, 1.8 GTI 16V, 1.8 GTI CAT, 1.8 GTI G60, 1.8 i CAT, 2.0** 08/83 - 07/92 33 -118 kW	**35-003663**	**24-015042** **11-101352** SP	
B8	**1.8 Syncro, 1.8 GTI G60 Syncro, 1.8 i Syncro CAT** 02/86 - 10/91 66 -118 kW	**35-003663**	**24-629485**	not for: Country
B12 PK	**1.0, 1.3, 1.3 CAT, 1.6, 1.6 G, 1.8, 1.8 GTI, 1.8 GTI CAT, 1.8 GTI G60, 1.8 i CAT** 08/83 - 10/91 33 -118 kW	**46-189950**		Conditions see certificates VA: lowering (expertise): 30-40 mm; axle load to: 840 kg HA: lowering (expertise): 30-35 mm; axle load to: 740 kg
B12 PK	**1.6 D, 1.6 TD, 1.6 TD CL, 1.8 GTI 16V** 08/83 - 10/91 37 -102 kW	**46-189967**		Conditions see certificates VA: lowering (expertise): 20 mm; axle load to: 840 kg HA: lowering (expertise): 20 mm; axle load to: 740 kg

V

VW

VW GOLF II (19E, 1G1)

B14	**1.0, 1.3, 1.3 CAT, 1.6, 1.6 D, 1.6 G, 1.6 TD, 1.6 TD CL, 1.8, 1.8 GTI, 1.8 GTI 16V, 1.8 GTI CAT, 1.8 GTI G60, 1.8 i CAT, 2.0** 08/83 - 07/92 33 -118 kW	**47-124844**		Conditions see certificates VA: lowering (expertise): 35-50 mm; axle load to: 840 kg HA: lowering (expertise): 10-30 mm; axle load to: 740 kg
B16 PSS9	**1.0, 1.3, 1.3 CAT, 1.6, 1.6 D, 1.6 G, 1.6 TD, 1.6 TD CL, 1.8, 1.8 GTI, 1.8 GTI 16V, 1.8 GTI CAT, 1.8 GTI G60, 1.8 i CAT, 2.0** 08/83 - 07/92 33 -118 kW	**48-080569**		Conditions see certificates VA: lowering (expertise): 30-50 mm; axle load to: 840 kg HA: lowering (expertise): 10-30 mm; axle load to: 740 kg
MS	**1.0, 1.3, 1.3 CAT, 1.6, 1.6 D, 1.6 G, 1.6 TD, 1.6 TD CL, 1.8, 1.8 GTI, 1.8 GTI 16V, 1.8 GTI CAT, 1.8 GTI G60, 1.8 i CAT, 2.0** 08/83 - 07/92 33 -118 kW	*35-001065*	*24-006552*	mark: Rallye Gruppe N VA: charakteristic: 230/90 HA: charakteristic: 230/90
MS	**1.0, 1.3, 1.3 CAT, 1.6, 1.6 D, 1.6 G, 1.6 TD, 1.6 TD CL, 1.8, 1.8 GTI, 1.8 GTI 16V, 1.8 GTI CAT, 1.8 GTI G60, 1.8 i CAT, 2.0** 08/83 - 07/92 33 -118 kW	*35-604525*	*24-627009*	mark: Rallye G. N+A Tarmac VA: Height Adjustable; charakteristic: 230/145 HA: Height Adjustable; with unibal joint bearing; charakteristic: 200/120
MS	**1.8 GTI, 1.8 GTI 16V, 1.8 GTI CAT, 1.8 GTI G60, 1.8 i CAT** 08/83 - 10/91 66 -118 kW	*35-044062*	*24-224024*	HA: charakteristic: 300/120; with unibal joint bearing

VW GOLF III (1H1)

B1	**1.0, 1.3 CL, 1.4, 1.6, 1.8, 1.8 Syncro, 1.9 D, 1.9 TD,GTD, 1.9 TDI, 1.9 TDI Syncro, 2.0, 2.0 Syncro, 2.0 GTI 16V** 08/92 - CH-Nr. 37 -110 kW	**12-116775**	**12-117239**	-> CH.Nr.: 1H-SW062538; for vehicles with "Basisachse" only VA: Øi: 14 mm; Øa: 126 mm; Material: Rubber/Metal; with ball bearing
B1	**1.0, 1.4, 1.6, 1.8, 1.8 Syncro, 1.9 D, 1.9 SDI, 1.9 TD,GTD, 1.9 TDI, 1.9 TDI Syncro, 2.0, 2.0 Syncro, 2.0 GL, 2.0 GTI 16V** CH-Nr. - 08/97 37 -110 kW	**12-117659**	**12-117239**	CH.Nr.: 1H-SW062539 ->; for vehicles with "Plusachse" only VA: with ball bearing
B2	**1.3 CL, 1.4, 1.6, 1.8, 1.9 D, 1.9 TD,GTD, 1.9 TDI, 2.0** 08/91 - 08/94 40 -85 kW	**17-047142** **11-101291** SP	**15-062192** **11-101352** SP	for vehicles with "Basisachse" only
B2	**1.4, 1.6, 1.8, 1.9 D, 1.9 SDI, 1.9 TD,GTD, 1.9 TDI, 2.0, 2.0 GL** 09/94 - 09/97 40 -85 kW	**17-104029** **11-101291** SP	**15-062192** **11-101352** SP	for vehicles with "Plusachse" only
B3	**1.0, 1.4, 1.6** 09/94 - 08/97 37 -55 kW	**37-131326**	**36-131136**	for vehicles with "Plusachse" only; with standard chassis
B3	**1.3 CL, 1.4, 1.6** 08/91 - 08/94 40 -55 kW	**36-131112**	**36-131136**	for vehicles with "Basisachse" only; with standard chassis
B3	**1.3 CL, 1.4, 1.6** 08/91 - 08/94 40 -55 kW	**36-130818**		for vehicles with "Basisachse" only; with standard chassis; Heavy Duty Version .
B3	**1.6, 1.8, 1.9 D, 1.9 SDI, 1.9 TD,GTD, 1.9 TDI, 2.0, 2.0 GL** 09/94 - 09/97 47 -85 kW	**37-131333**	**36-131136**	for vehicles with "Plusachse" only; with standard chassis
B3	**1.6, 1.8, 1.9 D, 1.9 SDI, 1.9 TD,GTD, 1.9 TDI, 2.0, 2.0 GL** 09/94 - 09/97 47 -85 kW	**36-201372**		for vehicles with "Plusachse" only; with standard chassis; Heavy Duty Version .
B3	**1.8, 1.9 D, 1.9 TD,GTD, 1.9 TDI, 2.0** 11/91 - 08/94 48 -85 kW	**36-130818**	**36-131136**	for vehicles with "Basisachse" only; with standard chassis
B3	**1.8, 1.9 D, 1.9 TD,GTD, 1.9 TDI, 2.0** 11/91 - 08/94 48 -85 kW	**36-130825**		for vehicles with "Basisachse" only; with standard chassis; Heavy Duty Version .

V

VW				
VW GOLF III (1H1)				
B3	**2.0 GTI 16V** 08/92 - 08/94 110 kW	**36-130825**	**36-131143**	with standard chassis
B3	**2.0 GTI 16V** 09/94 - 08/97 110 kW	**37-134211**	**36-131143**	with standard chassis
B3	**2.8 VR6** 01/92 - 08/94 128 kW		**36-131143**	with standard chassis
B3	**2.8 VR6** 09/94 - 09/97 120 -128 kW	**37-134228**	**36-131143**	with standard chassis
B4	**1.0, 1.4, 1.6, 1.8, 1.9 D, 1.9 SDI, 1.9 TD,GTD, 1.9 TDI, 2.0, 2.0 GL** 09/94 - 09/97 37 -85 kW	**22-045010** **11-101291** SP	**19-019741** **11-101352** SP	for vehicles with "Plusachse" only
B4	**1.0, 1.3 CL, 1.4, 1.6, 1.8, 1.9 D, 1.9 SDI, 1.9 TD,GTD, 1.9 TDI, 2.0, 2.0 GL** 11/91 - 09/97 37 -85 kW	**22-045027** **11-101291** SP	**19-124681** **11-101352** SP	with off-road suspension
B4	**1.3 CL, 1.4, 1.6, 1.8, 1.9 D, 1.9 TD,GTD, 1.9 TDI, 2.0** 08/91 - 08/94 40 -85 kW	**22-041142** **11-101291** SP	**19-019741** **11-101352** SP	for vehicles with "Basisachse" only
B4	**1.8 Syncro, 1.9 TDI Syncro, 2.0 Syncro** 01/93 - 08/97 66 -85 kW	**22-045010** **11-101291** SP		
B4	**2.0 GTI 16V** 08/92 - 08/97 110 kW	**22-045010** **11-101291** SP	**19-019963** **11-101352** SP	
B6 Sport	**1.0, 1.3 CL, 1.4, 1.6, 1.8, 1.9 D, 1.9 SDI, 1.9 TD,GTD, 1.9 TDI, 2.0, 2.0 GL, 2.0 GTI 16V, 2.8 VR6** 01/92 - 09/97 37 -128 kW	**35-043911**	**24-015240** **11-101352** SP	for vehicles with "Plusachse" only; mono-tube
B6 Sport	**1.0, 1.3 CL, 1.4, 1.6, 1.8, 1.9 D, 1.9 SDI, 1.9 TD,GTD, 1.9 TDI, 2.0, 2.0 GL, 2.0 GTI 16V, 2.8 VR6** 01/92 - 09/97 37 -128 kW	**35-043911** **11-101291** SP	**24-015240** **11-101352** SP	for vehicles with "Plusachse" only; twin-tube
B6 Sport	**1.0, 1.3 CL, 1.4, 1.6, 1.8, 1.9 D, 1.9 SDI, 1.9 TD,GTD, 1.9 TDI, 2.0, 2.0 GL, 2.0 GTI 16V, 2.8 VR6** 01/92 - 09/97 37 -128 kW	**35-181590**	**24-006569** **11-101352** SP	for vehicles with "Basisachse" only
B6 Sport	**1.3 CL, 1.4, 1.6, 1.8, 1.9 D, 1.9 SDI, 1.9 TD,GTD** 08/91 - 08/97 40 -74 kW	**35-043959**	**24-015240** **11-101352** SP	for vehicles with "Basisachse" only; mono-tube
B6 Sport	**1.3 CL, 1.4, 1.6, 1.8, 1.9 D, 1.9 SDI, 1.9 TD,GTD** 08/91 - 08/97 40 -74 kW	*22-181657* **11-101291** SP	**24-015240** **11-101352** SP	for vehicles with "Basisachse" only; twin-tube
B6 Sport	**1.8 Syncro, 1.9 TDI Syncro, 2.0 Syncro, 2.9 VR6 Syncro** 01/93 - 08/97 66 -140 kW	**35-043911**	**24-629485**	not for: Country
B8	**1.0, 1.3 CL, 1.4, 1.6, 1.8, 1.9 D, 1.9 SDI, 1.9 TDI, 2.0, 2.0 GL, 2.0 GTI 16V, 2.8 VR6** 01/92 - 09/97 37 -128 kW	**35-043928**	**24-015295** **11-101352** SP	for vehicles with "Plusachse" only; mono-tube
B8	**1.3 CL, 1.4, 1.6, 1.8, 1.9 D, 1.9 SDI, 1.9 TD,GTD** 08/91 - 08/97 40 -74 kW	**35-043966**	**24-015295** **11-101352** SP	for vehicles with "Basisachse" only; mono-tube
B8	**1.3 CL, 1.4, 1.6, 1.8, 1.9 D, 1.9 SDI, 1.9 TD,GTD** 08/91 - 08/97 40 -74 kW	*22-003737* **11-101291** SP	**24-015295** **11-101352** SP	for vehicles with "Basisachse" only; twin-tube
B8	**1.8 Syncro, 1.9 TDI Syncro, 2.0 Syncro, 2.9 VR6 Syncro** 01/93 - 08/97 66 -140 kW	**35-003663**	**24-629485**	

V

VW				
VW GOLF III (1H1)				
B10	**1.0, 1.3 CL, 1.4, 1.6, 1.8** 11/91 - 08/97 37 -74 kW	**46-112279**		for vehicles with "Basisachse" only; Conditions see certificates VA: lowering (expertise): 60 mm; Only in connection with 1H0 412 341 HA: lowering (expertise): 40 mm
B10	**1.9 D, 1.9 SDI, 1.9 TD,GTD, 1.9 TDI** 11/91 - 08/97 47 -81 kW	**46-113221**		for vehicles with "Basisachse" only; Conditions see certificates VA: lowering (expertise): 60 mm; Only in connection with 1H0 412 341 HA: lowering (expertise): 40 mm
B12 PK	**1.4, 1.6, 1.8, 1.9 D, 1.9 TD,GTD, 1.9 TDI, 2.0, 2.0 GTI 16V, 2.8 VR6** 10/91 - 08/94 40 -128 kW	**46-189981**		for vehicles with "Basisachse" only; Conditions see certificates VA: lowering (expertise): 30 mm; axle load to: 980 kg HA: lowering (expertise): 30 mm; axle load to: 840 kg
B12 PK	**1.4, 1.6, 1.8, 1.9 D, 1.9 SDI, 1.9 TD,GTD, 1.9 TDI, 1.9 TDI Syncro, 2.0, 2.0 GL, 2.0 GTI 16V, 2.8 VR6** 09/94 - 09/97 40 -128 kW	**46-190000**		for vehicles with "Plusachse" only; Conditions see certificates VA: lowering (expertise): 30 mm; axle load to: 980 kg HA: lowering (expertise): 30 mm; axle load to: 840 kg
B12 SL	**1.4, 1.6, 1.8** 10/91 - 08/94 40 -66 kW	**46-190048**		for vehicles with "Basisachse" only; Conditions see certificates VA: lowering (expertise): 45-50 mm; axle load to: 860 kg HA: lowering (expertise): 30-35 mm; axle load to: 840 kg
B12 SL	**1.4, 1.6, 1.8, 1.9 D, 1.9 SDI, 1.9 TD,GTD, 1.9 TDI, 2.0, 2.0 GL, 2.0 GTI 16V, 2.8 VR6** 09/94 - 09/97 40 -128 kW	**46-190024**		for vehicles with "Plusachse" only; Conditions see certificates VA: lowering (expertise): 45-50 mm; axle load to: 950 kg HA: lowering (expertise): 30-35 mm; axle load to: 840 kg
B12 SL	**1.8, 1.9 D, 1.9 TD,GTD, 1.9 TDI, 2.0, 2.0 GTI 16V, 2.8 VR6** 11/91 - 08/94 48 -128 kW	**46-190017**		for vehicles with "Basisachse" only; Conditions see certificates VA: lowering (expertise): 45-50 mm; axle load to: 950 kg HA: lowering (expertise): 30-35 mm; axle load to: 840 kg
B14	**1.0, 1.3 CL, 1.4, 1.6, 1.8, 1.9 D, 1.9 SDI, 1.9 TD,GTD, 1.9 TDI, 2.0, 2.0 GL, 2.0 GTI 16V, 2.8 VR6** 01/92 - 09/97 37 -128 kW	**47-124844**		Spacers required for several wheel/tyre combinations; Conditions see certificates VA: lowering (expertise): 30-50 mm; axle load to: 980 kg HA: lowering (expertise): 10-30 mm; axle load to: 840 kg
B16 PSS9	**1.0, 1.3 CL, 1.4, 1.6, 1.8, 1.9 D, 1.9 SDI, 1.9 TD,GTD, 1.9 TDI, 2.0, 2.0 GL, 2.0 GTI 16V, 2.8 VR6** 01/92 - 09/97 37 -128 kW	**48-080569**		Spacers required for several wheel/tyre combinations; Conditions see certificates VA: lowering (expertise): 30-50 mm; axle load to: 980 kg HA: lowering (expertise): 10-30 mm; axle load to: 840 kg
MS	**1.0, 1.3 CL, 1.4, 1.6, 1.8, 1.9 D, 1.9 SDI, 1.9 TD,GTD, 1.9 TDI, 2.0, 2.0 GL, 2.0 GTI 16V, 2.8 VR6** 01/92 - 09/97 37 -128 kW	*35-604525*	*24-627009*	mark: Rallye G. N+A Tarmac VA: Height Adjustable; charakteristic: 230/145 HA: Height Adjustable; with unibal joint bearing; charakteristic: 200/120
MS	**2.0 GTI 16V, 2.8 VR6** 01/92 - 09/97 110 -128 kW	*35-044062*	*24-224024*	HA: charakteristic: 300/120; with unibal joint bearing
VW GOLF III Variant (1H5)				
B1	**1.4, 1.6, 1.8, 1.9 D, 1.9 TD, 1.9 TDI, 2.0** 07/93 - CH-Nr. 40 -85 kW	**12-116775**	**12-117239**	-> CH.Nr.: 1H-SW062538 VA: Øi: 14 mm; Øa: 126 mm; Material: Rubber/Metal; with ball bearing
B1	**1.4, 1.6, 1.8, 1.9 D, 1.9 TD, 1.9 TDI, 2.0** CH-Nr. - 04/99 40 -85 kW	**12-117659**	**12-117239**	CH.Nr.: 1H-SW062539 -> VA: with ball bearing
B1	**1.8 Syncro, 1.9 SDI, 1.9 TDI Syncro, 2.0 Syncro** 10/94 - 04/99 47 -85 kW	**12-117659**		VA: with ball bearing
B2	**1.4, 1.6, 1.8, 1.9 D, 1.9 TD, 1.9 TDI, 2.0** 07/93 - 08/94 40 -85 kW	**17-047142** **11-101291** SP	**15-107077** **11-104322** SP	for vehicles with "Basisachse" only; with standard chassis
B2	**1.4, 1.6, 1.8, 1.9 D, 1.9 SDI, 1.9 TD, 1.9 TDI, 2.0** 09/94 - 04/99 40 -85 kW	**17-104029** **11-101291** SP	**15-107077** **11-104322** SP	for vehicles with "Plusachse" only; with standard chassis

V

VW

VW GOLF III Variant (1H5)

B2	**1.4, 1.6, 1.8, 1.9 D, 1.9 SDI, 1.9 TD, 1.9 TDI, 2.0** 09/94 - 04/99 40 -85 kW	**17-107150** **11-101291** SP		with off-road suspension
B3	**1.4, 1.6** 07/93 - 08/94 40 -55 kW	**36-131112**	**36-130887**	with standard chassis
B3	**1.4, 1.6, 1.8, 1.9 D, 1.9 TD, 1.9 TDI, 2.0** 07/93 - 08/94 40 -85 kW	**36-130825**	**36-130894**	for vehicles with "Basisachse" only; with standard chassis; Heavy Duty Version .
B3	**1.4, 1.6** 09/94 - 04/99 40 -55 kW	**37-131326**	**36-130887**	with standard chassis
B3	**1.4, 1.6** 09/94 - 04/99 40 -55 kW	**37-131333**	**36-130894**	with standard chassis; Heavy Duty Version .
B3	**1.6, 1.8, 1.9 D, 1.9 TD, 1.9 TDI, 2.0** 07/93 - 08/94 48 -85 kW	**36-130818**	**36-130887**	for vehicles with "Basisachse" only; with standard chassis
B3	**1.6, 1.8, 1.9 D, 1.9 SDI, 1.9 TD, 1.9 TDI, 2.0** 09/94 - 04/99 47 -85 kW	**37-131333**	**36-130887**	for vehicles with "Plusachse" only; with standard chassis
B3	**1.6, 1.8, 1.9 D, 1.9 SDI, 1.9 TD, 1.9 TDI, 2.0** 09/94 - 04/99 47 -85 kW	**36-201372**	**36-130887**	for vehicles with "Plusachse" only; with standard chassis; Heavy Duty Version .
B3	**2.9 VR6** 09/94 - 04/99 140 kW	**37-134228**	**36-130887**	with standard chassis
B3	**2.9 VR6** 10/94 - 04/99 140 kW		**36-130894**	with standard chassis; Heavy Duty Version .
B4	**1.4, 1.6, 1.8, 1.9 D, 1.9 TD, 1.9 TDI, 2.0** 07/93 - 08/94 40 -85 kW	**22-041142** **11-101291** SP	**19-028491** **11-104322** SP	for vehicles with "Basisachse" only; with standard chassis
B4	**1.4, 1.6, 1.8, 1.9 D, 1.9 SDI, 1.9 TD, 1.9 TDI, 2.0, 2.9 VR6** 09/94 - 04/99 40 -140 kW	**22-045010** **11-101291** SP	**19-028491** **11-104322** SP	for vehicles with "Plusachse" only; with standard chassis
B4	**1.4, 1.6, 1.8, 1.9 D, 1.9 SDI, 1.9 TD, 1.9 TDI, 2.0** 09/94 - 04/99 40 -85 kW	**22-045027** **11-101291** SP		with off-road suspension
B4	**1.8 Syncro** 10/94 - 04/99 66 kW	**22-045010** **11-101291** SP		
B4	**1.9 TDI Syncro, 2.0 Syncro, 2.9 VR6 Syncro** 10/94 - 04/99 66 -140 kW	**22-045027** **11-101291** SP		
B6 Sport	**1.4, 1.6, 1.8, 1.9 D, 1.9 TD, 1.9 TDI, 2.0** 07/93 - 04/99 40 -85 kW	**35-043959**	**24-020473** **11-104322** SP	for vehicles with "Basisachse" only; mono-tube
B6 Sport	**1.4, 1.6, 1.8, 1.9 D, 1.9 TD, 1.9 TDI, 2.0** 07/93 - 04/99 40 -85 kW	*22-181657* **11-101291** SP	**24-020473** **11-104322** SP	for vehicles with "Basisachse" only; twin-tube
B6 Sport	**1.4, 1.6, 1.8, 1.9 D, 1.9 SDI, 1.9 TD, 1.9 TDI, 2.0, 2.9 VR6** 07/93 - 04/99 40 -140 kW	**35-043911**	**24-020473** **11-104322** SP	for vehicles with "Plusachse" only; mono-tube
B6 Sport	**1.4, 1.6, 1.8, 1.9 D, 1.9 SDI, 1.9 TD, 1.9 TDI, 2.0, 2.9 VR6** 07/93 - 04/99 40 -140 kW	**35-043911** **11-101291** SP	**24-020473** **11-104322** SP	for vehicles with "Plusachse" only; twin-tube
B8	**1.4, 1.6, 1.8, 1.9 D, 1.9 TD, 1.9 TDI, 2.0** 07/93 - 04/99 40 -85 kW	**35-043966**	**24-020480** **11-104322** SP	for vehicles with "Basisachse" only; mono-tube

V

VW

VW GOLF III Variant (1H5)

B8	**1.4, 1.6, 1.8, 1.9 D, 1.9 TD, 1.9 TDI, 2.0** 07/93 - 04/99 40 -85 kW	*22-003737* **11-101291** SP	**24-020480** **11-104322** SP	for vehicles with "Basisachse" only; twin-tube
B8	**1.4, 1.6, 1.8, 1.9 D, 1.9 SDI, 1.9 TD, 1.9 TDI, 2.0, 2.9 VR6** 07/93 - 04/99 40 -140 kW	**35-043928**	**24-020480** **11-104322** SP	for vehicles with "Plusachse" only; mono-tube
B12 PK	**1.4, 1.6, 1.8, 1.9 D, 1.9 SDI, 1.9 TD, 1.9 TDI, 2.0, 2.9 VR6** 07/93 - 04/99 40 -140 kW	**46-190086**		for vehicles with "Basisachse" only; Conditions see certificates VA: lowering (expertise): 30 mm; axle load to: 980 kg HA: lowering (expertise): 30 mm; axle load to: 925 kg
B12 PK	**1.4, 1.6, 1.8, 1.9 D, 1.9 SDI, 1.9 TD, 1.9 TDI, 2.0, 2.9 VR6** 07/93 - 04/99 40 -140 kW	**46-190079**		for vehicles with "Plusachse" only; Conditions see certificates VA: lowering (expertise): 30 mm; axle load to: 980 kg HA: lowering (expertise): 30 mm; axle load to: 925 kg

VW GOLF III Cabriolet (1E7)

B1	**1.6, 1.8, 1.9 TDI, 2.0** 07/93 - 05/98 55 -85 kW	**12-117659**	**12-117239**	VA: with ball bearing
B3	**1.6, 1.8, 1.9 TDI, 2.0** 09/94 - 05/98 55 -85 kW	**36-201372**		with standard chassis
B3	**1.8, 2.0** 07/93 - 08/94 55 -85 kW	**36-130825**		with standard chassis
B4	**1.6, 1.8, 1.9 TDI, 2.0** 07/93 - 05/98 55 -85 kW	**22-045010** **11-101291** SP	**19-019741** **11-101352** SP	for vehicles with "Plusachse" only
B6 Sport	**1.6, 1.8, 1.9 TDI, 2.0** 07/93 - 05/98 55 -85 kW	**35-043911**	**24-015240** **11-101352** SP	for vehicles with "Plusachse" only; mono-tube
B6 Sport	**1.6, 1.8, 1.9 TDI, 2.0** 07/93 - 05/98 55 -85 kW	**35-043911** **11-101291** SP	**24-015240** **11-101352** SP	for vehicles with "Plusachse" only; twin-tube
B8	**1.6, 1.8, 1.9 TDI, 2.0** 07/93 - 05/98 55 -85 kW	**35-043928**	**24-015295** **11-101352** SP	for vehicles with "Plusachse" only; mono-tube
B10	**1.6, 1.8, 1.9 TDI, 2.0** 07/93 - 05/98 55 -85 kW	**46-112255**		for vehicles with "Basisachse" only; Conditions see certificates VA: lowering (expertise): 60 mm; Only in connection with 1H0 412 341 HA: lowering (expertise): 40 mm
B12 PK	**1.6, 1.8, 1.9 TDI, 2.0** 07/93 - 05/98 55 -85 kW	**46-190062**		for vehicles with "Plusachse" only; Conditions see certificates VA: lowering (expertise): 30 mm; axle load to: 980 kg HA: lowering (expertise): 30 mm; axle load to: 840 kg
B12 PK	**1.8, 2.0** 07/93 - 08/94 55 -85 kW	**46-193285**		for vehicles with "Basisachse" only; Conditions see certificates VA: lowering (expertise): 30 mm; axle load to: 980 kg HA: lowering (expertise): 30 mm; axle load to: 840 kg
B14	**1.6, 1.8, 1.9 TDI, 2.0** 07/93 - 05/98 55 -85 kW	**47-124844**		Spacers required for several wheel/tyre combinations; Conditions see certificates VA: lowering (expertise): 30-50 mm; axle load to: 980 kg HA: lowering (expertise): 10-30 mm; axle load to: 840 kg
B16 PSS9	**1.6, 1.8, 1.9 TDI, 2.0** 07/93 - 05/98 55 -85 kW	**48-080569**		Conditions see certificates VA: lowering (expertise): 30-50 mm; axle load to: 980 kg HA: lowering (expertise): 10-30 mm; axle load to: 840 kg

VW GOLF IV (1J1)

B1	**1.4 16V, 1.6, 1.6 16V, 1.6 D, 1.8, 1.8 T, 1.8 T GTI, 1.9 SDI, 1.9 TD, 1.9 TDI, 2.0, 2.3 V5** 08/97 - 12/01 40 -132 kW	**12-116966**	**12-117079**	VA: with ball bearing HA: without ball bearing; Material: Rubber/Metal; Material: Aluminium
B1	**1.4 16V, 1.6, 1.6 16V, 1.6 FSI, 1.8, 1.8 T, 1.8 T GTI, 1.9 SDI, 1.9 TDI, 2.0, 2.3 V5** 01/02 - 06/05 50 -132 kW	**12-116966**	**12-117840**	VA: with ball bearing

V

VW				
VW GOLF IV (1J1)				
B1	**1.8 4motion, 1.9 TDI 4motion, 2.0 4motion, 2.3 V5 4motion, 2.8 V6 4motion, 3.2 R32 4motion** 05/98 - 06/05 66 -177 kW	**12-116966**		VA: with ball bearing
B3	**1.4 16V, 1.6, 1.6 16V, 1.6 FSI, 1.8** 08/97 - 06/05 55 -92 kW	**37-131432**	**36-131228**	with standard chassis
B3	**1.4 16V, 1.6, 1.6 16V, 1.6 FSI, 1.8** 08/97 - 06/05 55 -92 kW	**37-131425**	**36-131297**	with standard chassis; Heavy Duty Version .
B3	**1.4 16V, 1.8, 1.8 T, 1.8 T GTI** 08/97 - 06/05 55 -132 kW	**37-155155**	**36-134113**	with sports suspension
B3	**1.6, 1.6 16V, 1.6 FSI** 08/97 - 06/05 68 -81 kW	**37-134211**	**36-134113**	with sports suspension
B3	**1.8 T, 1.8 T GTI** 08/97 - 06/05 110 -132 kW	**37-131432**	**36-131228**	with standard chassis; manual transmission
B3	**1.8 T, 1.8 T GTI** 08/97 - 06/05 110 -132 kW	**37-131425**	**36-131228**	with standard chassis; automatic transmission
B3	**1.8 T, 1.8 T GTI** 08/97 - 06/05 110 -132 kW		**36-131297**	with standard chassis; Heavy Duty Version .
B3	**1.6 D, 1.9 SDI, 1.9 TD, 1.9 TDI, 2.0, 2.3 V5** 08/97 - 06/05 40 -125 kW	**37-131425**	**36-131228**	with standard chassis
B3	**1.6 D, 1.9 SDI, 1.9 TD, 1.9 TDI, 2.0, 2.3 V5** 08/97 - 06/05 40 -125 kW		**36-131297**	with standard chassis; Heavy Duty Version .
B4	**1.4 16V, 1.6, 1.6 16V, 1.6 D, 1.6 FSI, 1.8, 1.8 T, 1.8 T GTI, 1.9 SDI, 1.9 TD, 1.9 TDI, 2.0, 2.3 V5** 08/97 - 06/05 40 -132 kW	**22-045744** **11-103455** SP	**19-029429** **11-115755** SP	with standard chassis
B4	**1.4 16V, 1.6, 1.6 16V, 1.6 D, 1.6 FSI, 1.8, 1.8 T, 1.8 T GTI, 1.9 SDI, 1.9 TD, 1.9 TDI, 2.0, 2.3 V5** 08/97 - 06/05 40 -132 kW	**22-045751** **11-103455** SP	**19-029177** **11-115755** SP	with sports suspension
B4	**1.4 16V, 1.6, 1.6 16V, 1.6 D, 1.6 FSI, 1.8, 1.8 T, 1.8 T GTI, 1.9 SDI, 1.9 TD, 1.9 TDI, 2.0, 2.3 V5** 08/97 - 06/05 40 -132 kW	**22-045744** **11-103455** SP	**19-140032** **11-115755** SP	with off-road suspension
B4	**1.8 4motion, 1.9 TDI 4motion, 2.0 4motion, 2.3 V5 4motion, 2.8 V6 4motion** 05/98 - 06/05 66 -150 kW	**22-145550**	**19-145570**	with standard chassis
B6 Sport	**1.4 16V, 1.6, 1.6 16V, 1.6 D, 1.6 FSI, 1.8, 1.8 T, 1.8 T GTI, 1.9 SDI, 1.9 TD, 1.9 TDI, 2.0, 2.3 V5** 08/97 - 06/05 40 -132 kW	**35-044079**	**24-026239** **11-115755** SP	VA: Mono Tube Upside Down
B6 Sport	**1.8 4motion, 1.9 TDI 4motion, 2.0 4motion, 2.3 V5 4motion, 2.8 V6 4motion** 05/98 - 06/05 66 -150 kW	**35-046370**	**24-060349**	
B8	**1.4 16V, 1.6, 1.6 16V, 1.6 D, 1.6 FSI, 1.8, 1.8 T, 1.8 T GTI, 1.9 SDI, 1.9 TD, 1.9 TDI, 2.0, 2.3 V5** 08/97 - 06/05 40 -132 kW	**35-044086**	**24-026246** **11-115755** SP	VA: Mono Tube Upside Down
B8	**1.8 4motion, 1.9 TDI 4motion, 2.0 4motion, 2.3 V5 4motion, 2.8 V6 4motion** 05/98 - 06/05 66 -150 kW	**35-046387**	**24-060356**	VA: Mono Tube Upside Down

V

		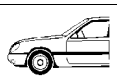	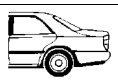	
VW				
VW GOLF IV (1J1)				
B10	**1.4 16V, 1.6, 1.6 16V, 1.6 D, 1.6 FSI, 1.8, 1.8 T, 1.8 T GTI, 1.9 SDI, 1.9 TD, 1.9 TDI, 2.0, 2.3 V5** 08/97 - 06/05 40 -132 kW	**46-111890**		Conditions see certificates VA: lowering (expertise): 55 mm; axle load to: 980 kg HA: lowering (expertise): 40 mm
B10	**1.4 16V, 1.6, 1.6 16V, 1.6 D, 1.6 FSI, 1.8, 1.8 T, 1.8 T GTI, 1.9 SDI, 1.9 TD, 1.9 TDI, 2.0, 2.3 V5** 08/97 - 06/05 40 -132 kW	**46-111906**		Conditions see certificates VA: lowering (expertise): 55 mm; axle load from: 981 kg HA: lowering (expertise): 40 mm
B12 PK	**1.4 16V, 1.6, 1.6 16V, 1.6 FSI** 08/97 - 06/05 55 -81 kW	**46-180353**		Conditions see certificates VA: lowering (expertise): 30 mm; axle load to: 930 kg HA: without ride height adjustment; lowering (expertise): 30 mm; axle load to: 925 kg
B12 PK	**1.8, 1.9 SDI, 2.0** 08/97 - 06/05 50 -92 kW	**46-180346**		Conditions see certificates VA: lowering (expertise): 30 mm; axle load to: 970 kg HA: without ride height adjustment; lowering (expertise): 30 mm; axle load to: 925 kg
B12 PK	**1.8 4motion, 1.9 TDI 4motion, 2.0 4motion** 05/98 - 06/05 66 -110 kW	**46-180193**		Conditions see certificates VA: lowering (expertise): 30 mm; axle load to: 1030 kg HA: without ride height adjustment; lowering (expertise): 30 mm; axle load to: 1120 kg
B12 PK	**1.8 T** 08/97 - 06/05 110 kW	**46-180339**		Conditions see certificates VA: lowering (expertise): 30 mm; axle load to: 1000 kg HA: without ride height adjustment; lowering (expertise): 30 mm; axle load to: 925 kg
B12 PK	**1.8 T GTI** 08/01 - 06/05 132 kW	**46-180339**		Conditions see certificates VA: lowering (expertise): 10 mm; axle load to: 1000 kg HA: without ride height adjustment; lowering (expertise): 10 mm; axle load to: 925 kg
B12 PK	**1.9 TD, 1.9 TDI** 08/97 - 05/04 55 -81 kW	**46-180346**		Conditions see certificates; manual transmission VA: lowering (expertise): 30 mm; axle load to: 970 kg HA: without ride height adjustment; lowering (expertise): 30 mm; axle load to: 925 kg
B12 PK	**1.9 TDI** 08/97 - 05/04 66 -81 kW	**46-180339**		Conditions see certificates; automatic transmission VA: lowering (expertise): 30 mm; axle load to: 1000 kg HA: without ride height adjustment; lowering (expertise): 30 mm; axle load to: 925 kg
B12 PK	**1.9 TDI 4motion, 2.3 V5 4motion, 2.8 V6 4motion** 07/98 - 06/05 66 -150 kW	**46-180209**		Conditions see certificates VA: lowering (expertise): 30 mm; axle load to: 1050 kg HA: without ride height adjustment; lowering (expertise): 30 mm; axle load to: 1120 kg
B12 PK	**1.9 TDI, 2.3 V5** 08/97 - 06/05 74 -110 kW	**46-180339**		Conditions see certificates; manual transmission VA: lowering (expertise): 30 mm; axle load to: 1000 kg HA: without ride height adjustment; lowering (expertise): 30 mm; axle load to: 925 kg
B12 PK	**1.9 TDI, 2.3 V5** 08/97 - 06/05 74 -110 kW	**46-180322**		Conditions see certificates; automatic transmission VA: lowering (expertise): 30 mm; axle load to: 1050 kg HA: without ride height adjustment; lowering (expertise): 30 mm; axle load to: 925 kg
B12 PK	**1.9 TDI, 2.3 V5** 10/00 - 06/05 96 -125 kW	**46-180322**		Conditions see certificates; manual transmission VA: lowering (expertise): 30 mm; axle load to: 1050 kg HA: without ride height adjustment; lowering (expertise): 30 mm; axle load to: 925 kg
B12 SL	**1.0 GX, 1.4 16V, 1.6, 1.6 16V, 1.6 D, 1.6 FSI, 1.8, 1.8 T, 1.9 SDI, 1.9 TD, 1.9 TDI, 2.0** 08/97 - 06/05 40 -110 kW	**46-180308**		Conditions see certificates VA: lowering (expertise): 45-50 mm; axle load to: 950 kg HA: without ride height adjustment; lowering (expertise): 30-35 mm; axle load to: 1000 kg
B12 SL	**1.8, 1.8 T, 1.9 TD, 1.9 TDI, 2.0, 2.3 V5** 08/97 - 06/05 55 -125 kW	**46-180315**		Conditions see certificates VA: lowering (expertise): 45-50 mm; axle load to: 1000 kg HA: without ride height adjustment; lowering (expertise): 30-35 mm; axle load to: 1000 kg
B12 SL	**1.8 T GTI** 08/01 - 06/05 132 kW	**46-180308**		Conditions see certificates VA: lowering (expertise): 25-30 mm; axle load to: 950 kg HA: without ride height adjustment; lowering (expertise): 10-15 mm; axle load to: 1000 kg
B12 SL	**1.8 T GTI** 08/01 - 06/05 132 kW	**46-180315**		Conditions see certificates VA: lowering (expertise): 25-30 mm; axle load to: 1000 kg HA: without ride height adjustment; lowering (expertise): 10-15 mm; axle load to: 1000 kg

VW

VW GOLF IV (1J1)

B14	**1.0 GX, 1.4 16V, 1.6, 1.6 16V, 1.6 D, 1.6 FSI, 1.8, 1.8 T, 1.8 T GTI, 1.9 SDI, 1.9 TD, 1.9 TDI, 2.0, 2.3 V5** 08/97 - 06/05 40 -132 kW	**47-124851**		Spacers required for several wheel/tyre combinations; Conditions see certificates VA: lowering (expertise): 25-45 mm; axle load to: 1060 kg HA: lowering (expertise): 20-40 mm; axle load to: 1010 kg
B14	**1.8 4motion, 1.9 TDI 4motion, 2.0 4motion, 2.3 V5 4motion, 2.8 V6 4motion, 3.2 R32 4motion** 05/98 - 06/05 66 -177 kW	**47-080416**		Spacers required for several wheel/tyre combinations; Conditions see certificates VA: lowering (expertise): 30-50 mm; axle load to: 1110 kg HA: lowering (expertise): 30-50 mm; axle load to: 1080 kg
B16 PSS9	**1.0 GX, 1.4 16V, 1.6, 1.6 16V, 1.6 D, 1.6 FSI, 1.8, 1.8 T, 1.8 T GTI, 1.9 SDI, 1.9 TD, 1.9 TDI, 2.0, 2.3 V5** 08/97 - 06/05 40 -132 kW	**48-080651**		Spacers required for several wheel/tyre combinations; Conditions see certificates VA: lowering (expertise): 25-45 mm; axle load to: 1060 kg HA: lowering (expertise): 20-40 mm; axle load to: 1010 kg
B16 PSS9	**1.8 4motion, 1.9 TDI 4motion, 2.0 4motion, 2.3 V5 4motion, 2.8 V6 4motion, 3.2 R32 4motion** 05/98 - 06/05 66 -177 kW	**48-080422**		Spacers required for several wheel/tyre combinations; Conditions see certificates VA: lowering (expertise): 30-50 mm; axle load to: 1110 kg HA: lowering (expertise): 30-50 mm; axle load to: 1080 kg

VW GOLF IV Variant (1J5)

B1	**1.4 16V, 1.6, 1.6 16V, 1.8 T, 1.9 SDI, 1.9 TDI, 1.9 TDi GTi, 2.0, 2.3 V5** 05/99 - 12/01 50 -125 kW	**12-116966**	**12-117079**	VA: with ball bearing HA: without ball bearing; Material: Rubber/Metal; Material: Aluminium
B1	**1.4 16V, 1.6, 1.6 16V, 1.6 FSI, 1.8 T, 1.9 SDI, 1.9 TDI, 1.9 TDi GTi, 2.0, 2.0 Bi-Fuel, 2.3 V5** 01/02 - 06/06 50 -125 kW	**12-116966**	**12-117840**	VA: with ball bearing
B1	**1.8 4motion, 1.9 TDI 4motion, 2.0 4motion, 2.3 V5 4motion, 2.8 V6 4motion** 05/99 - 06/06 66 -150 kW	**12-116966**		VA: with ball bearing
B3	**1.4 16V, 1.6, 1.6 16V, 1.6 FSI, 1.9 SDI, 2.0 Bi-Fuel** 05/99 - 06/06 50 -85 kW	**37-134129**	**36-131297**	with standard chassis
B3	**1.4 16V, 1.6, 1.6 16V, 1.6 FSI, 1.9 SDI** 05/99 - 06/06 50 -85 kW	**37-131425**	**36-155101**	with standard chassis; Heavy Duty Version .
B3	**1.8 T, 1.9 TDI, 1.9 TDi GTi, 2.0, 2.3 V5** 05/99 - 06/06 66 -125 kW	**37-131425**	**36-131297**	with standard chassis
B3	**1.8 T, 1.9 TDI, 1.9 TDi GTi** 08/99 - 06/06 66 -110 kW		**36-155101**	with standard chassis; Heavy Duty Version .
B4	**1.4 16V, 1.6, 1.6 16V, 1.6 FSI, 1.8 T, 1.9 SDI, 1.9 TDI, 1.9 TDi GTi, 2.0, 2.0 Bi-Fuel, 2.3 V5** 05/99 - 06/06 50 -125 kW	**22-045744** **11-103455** SP	**19-068633** **11-115755** SP	with standard chassis
B4	**1.4 16V, 1.6, 1.6 16V, 1.6 FSI, 1.8 T, 1.9 SDI, 1.9 TDI, 1.9 TDi GTi, 2.0, 2.0 Bi-Fuel, 2.3 V5** 05/99 - 06/06 50 -125 kW	**22-045751** **11-103455** SP		with sports suspension
B4	**1.4 16V, 1.6, 1.6 16V, 1.6 FSI, 1.8 T, 1.9 SDI, 1.9 TDI, 1.9 TDi GTi, 2.0, 2.3 V5** 05/99 - 06/06 50 -125 kW	**22-045744** **11-103455** SP	**19-140032** **11-115755** SP	with off-road suspension
B6 Sport	**1.4 16V, 1.6, 1.6 16V, 1.6 FSI, 1.8 T, 1.9 SDI, 1.9 TDI, 1.9 TDi GTi, 2.0, 2.0 Bi-Fuel, 2.3 V5** 05/99 - 06/06 50 -125 kW	**35-044079**	**24-064095** **11-115755** SP	mono-tube VA: Mono Tube Upside Down
B6 Sport	**1.8 4motion, 1.9 TDI 4motion, 2.0 4motion, 2.3 V5 4motion, 2.8 V6 4motion** 05/99 - 06/06 66 -150 kW	**35-046370**	**24-060349**	

V

VW				
VW GOLF IV Variant (1J5)				
B8	**1.4 16V, 1.6, 1.6 16V, 1.6 FSI, 1.8 T, 1.9 SDI, 1.9 TDI, 1.9 TDi GTi, 2.0, 2.0 Bi-Fuel, 2.3 V5** 05/99 - 06/06 50 -125 kW	**35-044086**	**24-064101**	mono-tube
B8	**1.8 4motion, 1.9 TDI 4motion, 2.0 4motion, 2.3 V5 4motion, 2.8 V6 4motion** 05/99 - 06/06 66 -150 kW	**35-046387**	**24-060356**	
B10	**1.4 16V, 1.6, 1.6 16V, 1.6 FSI, 1.8 T, 1.9 SDI, 1.9 TDI, 1.9 TDi GTi, 2.0, 2.3 V5** 05/99 - 06/06 50 -125 kW	**46-111944**		Conditions see certificates VA: lowering (expertise): 55 mm; axle load to: 980 kg HA: lowering (expertise): 40 mm
B10	**1.4 16V, 1.6, 1.6 16V, 1.6 FSI, 1.8 T, 1.9 SDI, 1.9 TDI, 1.9 TDi GTi, 2.0, 2.3 V5** 05/99 - 06/06 50 -125 kW	**46-111937**		Conditions see certificates VA: lowering (expertise): 55 mm; axle load to: 1020 kg; axle load from: 981 kg HA: lowering (expertise): 40 mm
B12 PK	**1.4 16V, 1.6, 1.6 16V, 1.6 FSI** 05/99 - 06/06 55 -85 kW	**46-180407**		Conditions see certificates VA: lowering (expertise): 30 mm; axle load to: 930 kg HA: without ride height adjustment; lowering (expertise): 30 mm; axle load to: 1020 kg
B12 PK	**1.8 4motion, 1.9 TDI 4motion, 2.0 4motion** 05/99 - 06/06 66 -96 kW	**46-180193**		Conditions see certificates VA: lowering (expertise): 30 mm; axle load to: 1030 kg HA: without ride height adjustment; lowering (expertise): 30 mm; axle load to: 1120 kg
B12 PK	**1.8 T** 05/00 - 06/06 110 kW	**46-180421**		Conditions see certificates VA: lowering (expertise): 30 mm; axle load to: 1000 kg HA: without ride height adjustment; lowering (expertise): 30 mm; axle load to: 1020 kg
B12 PK	**1.9 SDI, 2.0** 05/99 - 06/06 50 -85 kW	**46-180414**		Conditions see certificates VA: lowering (expertise): 30 mm; axle load to: 970 kg HA: without ride height adjustment; lowering (expertise): 30 mm; axle load to: 1020 kg
B12 PK	**1.9 TDI** 05/99 - 05/06 66 -81 kW	**46-180414**		Conditions see certificates; manual transmission VA: lowering (expertise): 30 mm; axle load to: 970 kg HA: without ride height adjustment; lowering (expertise): 30 mm; axle load to: 1020 kg
B12 PK	**1.9 TDI** 05/99 - 05/06 66 -81 kW	**46-180421**		Conditions see certificates; automatic transmission VA: lowering (expertise): 30 mm; axle load to: 1000 kg HA: without ride height adjustment; lowering (expertise): 30 mm; axle load to: 1020 kg
B12 PK	**1.9 TDI 4motion, 2.3 V5 4motion, 2.8 V6 4motion** 05/99 - 06/06 66 -150 kW	**46-180209**		Conditions see certificates VA: lowering (expertise): 30 mm; axle load to: 1050 kg HA: without ride height adjustment; lowering (expertise): 30 mm; axle load to: 1120 kg
B12 PK	**1.9 TDI, 2.3 V5** 05/99 - 06/06 74 -110 kW	**46-180421**		Conditions see certificates; manual transmission VA: lowering (expertise): 30 mm; axle load to: 1000 kg HA: without ride height adjustment; lowering (expertise): 30 mm; axle load to: 1020 kg
B12 PK	**1.9 TDI, 2.3 V5** 05/99 - 06/06 74 -110 kW	**46-180438**		Conditions see certificates; automatic transmission VA: lowering (expertise): 30 mm; axle load to: 1050 kg HA: without ride height adjustment; lowering (expertise): 30 mm; axle load to: 1020 kg
B12 PK	**1.9 TDI, 2.3 V5** 10/00 - 06/06 96 -125 kW	**46-180438**		Conditions see certificates; manual transmission VA: lowering (expertise): 30 mm; axle load to: 1050 kg HA: without ride height adjustment; lowering (expertise): 30 mm; axle load to: 1020 kg
B12 PK	**1.9 TDi GTi** 06/01 - 06/06 110 kW	**46-180438**		Conditions see certificates; manual transmission VA: lowering (expertise): 10 mm; axle load to: 1050 kg HA: without ride height adjustment; lowering (expertise): 10 mm; axle load to: 1020 kg
VW GOLF IV Cabriolet (1E7)				
B1	**1.6, 1.8, 1.9 TDI, 2.0** 06/98 - 06/02 55 -85 kW	**12-117659**		VA: with ball bearing
B3	**1.6, 1.8, 1.9 TDI, 2.0** 06/98 - 06/02 55 -85 kW	**36-201372**		with standard chassis
B4	**1.6, 1.8, 1.9 TDI, 2.0** 06/98 - 06/02 55 -85 kW	**22-045010** **11-101291** SP	**19-019741** **11-101352** SP	for vehicles with "Plusachse" only

V

VW

VW GOLF IV Cabriolet (1E7)

B6 Sport	**1.6, 1.8, 1.9 TDI, 2.0** 06/98 - 06/02 55 -85 kW	**35-043911**	**24-015240** **11-101352** SP	for vehicles with "Plusachse" only; mono-tube
B8	**1.6, 1.8, 1.9 TDI, 2.0** 06/98 - 06/02 55 -85 kW	**35-043928**	**24-015295** **11-101352** SP	for vehicles with "Plusachse" only; mono-tube
B10	**1.6, 1.8, 1.9 TDI, 2.0** 06/98 - 06/02 55 -85 kW	**46-112255**		for vehicles with "Basisachse" only; Conditions see certificates VA: lowering (expertise): 60 mm; Only in connection with 1H0 412 341 HA: lowering (expertise): 40 mm
B12 PK	**1.6, 1.8, 1.9 TDI, 2.0** 06/98 - 06/02 55 -85 kW	**46-190062**		for vehicles with "Plusachse" only; Conditions see certificates VA: lowering (expertise): 30 mm; axle load to: 980 kg HA: lowering (expertise): 30 mm; axle load to: 840 kg
B14	**1.6, 1.8, 1.9 TDI, 2.0** 06/98 - 06/02 55 -85 kW	**47-124844**		Spacers required for several wheel/tyre combinations; Conditions see certificates VA: lowering (expertise): 30-50 mm; axle load to: 980 kg HA: lowering (expertise): 10-30 mm; axle load to: 840 kg
B16 PSS9	**1.6, 1.8, 1.9 TDI, 2.0** 06/98 - 06/02 55 -85 kW	**48-080569**		Conditions see certificates VA: lowering (expertise): 30-50 mm; axle load to: 950 kg HA: lowering (expertise): 10-30 mm; axle load to: 820 kg

VW GOLF V (1K1)

B1	**1.0, 1.0 Touring, 1.4 16V, 1.4 FSI, 1.4 TSI, 1.6, 1.6 FSi, 1.6 MultiFuel, 1.8, 1.8 GTi, 1.9 SDi, 1.9 TDI, 1.9 TDI 4motion, 2.0, 2.0 FSI, 2.0 FSI 4motion, 2.0 GTD, 2.0 GTI, 2.0 SDI, 2.0 TDI, 2.0 TDI 4motion, 2.0 TDI 16V, 2.0 TDI 16V 4motion, 2.5 FSi VR5, 3.2, 3.2 R32 4motion** 01/04 - 47 -184 kW	**12-224074**	**12-224081**	VA: with ball bearing HA: without ball bearing
B3	**1.4 16V, 1.4 FSI, 1.4 TSI, 1.6, 1.6 FSi, 1.6 MultiFuel, 1.8, 1.9 SDi, 2.0 SDI** 10/03 - 47 -125 kW	**37-133030**	**36-133055**	with standard chassis
B3	**2.0 GTI, 2.5 FSi VR5** 10/04 - 110 -169 kW	**37-148126**	**36-148134**	with standard chassis
B3	**1.9 TDI, 2.0 FSI** 01/04 - 66 -110 kW	**37-133498**	**36-134076**	with standard chassis
B3	**2.0 GTD, 2.0 TDI, 2.0 TDI 16V** 10/03 - 100 -125 kW	**37-133757**	**36-134076**	with standard chassis
B4	**1.0, 1.0 Touring, 1.4 16V, 1.4 FSI, 1.4 TSI, 1.6, 1.6 FSi, 1.6 MultiFuel, 1.8, 1.9 SDi, 1.9 TDI, 1.9 TDI 4motion, 2.0, 2.0 FSI, 2.0 FSI 4motion, 2.0 GTD, 2.0 SDI, 2.0 TDI, 2.0 TDI 4motion, 2.0 TDI 16V, 2.0 TDI 16V 4motion** 08/04 - 47 -125 kW	**22-131607**	**19-127439**	with standard chassis; mark: G02 + 2UA VA: Øa: 50 mm
B4	**1.0, 1.0 Touring, 1.4 16V, 1.4 FSI, 1.4 TSI, 1.6, 1.6 FSi, 1.6 MultiFuel, 1.8, 1.9 SDi, 1.9 TDI, 1.9 TDI 4motion, 2.0, 2.0 FSI, 2.0 FSI 4motion, 2.0 GTD, 2.0 SDI, 2.0 TDI, 2.0 TDI 4motion, 2.0 TDI 16V, 2.0 TDI 16V 4motion** 08/04 - 47 -125 kW	**22-131614**	**19-127439**	with standard chassis; mark: G07 + 2UA VA: Øa: 55 mm
B4	**1.0, 1.0 Touring, 1.4 16V, 1.4 FSI, 1.4 TSI, 1.6, 1.6 FSi, 1.6 MultiFuel, 1.8, 1.9 SDi, 1.9 TDI, 1.9 TDI 4motion, 2.0, 2.0 FSI, 2.0 FSI 4motion, 2.0 GTD, 2.0 SDI, 2.0 TDI, 2.0 TDI 4motion, 2.0 TDI 16V, 2.0 TDI 16V 4motion** 08/04 - 47 -125 kW	**22-139184**	**19-127439**	with sports suspension; mark: G02 + 2UC VA: Øa: 50 mm

V

VW

VW GOLF V (1K1)

B4	**1.0, 1.0 Touring, 1.4 16V, 1.4 FSI, 1.4 TSI, 1.6, 1.6 FSi, 1.6 MultiFuel, 1.8, 1.9 SDi, 1.9 TDI, 1.9 TDI 4motion, 2.0, 2.0 FSI, 2.0 FSI 4motion, 2.0 GTD, 2.0 SDI, 2.0 TDI, 2.0 TDI 4motion, 2.0 TDI 16V, 2.0 TDI 16V 4motion** 08/04 - 47 -125 kW	**22-139191**	**19-127439**	with sports suspension; mark: G07,G08,G09,G11 +2UC VA: Øa: 55 mm
B4	**1.8 GTi, 2.0 GTI, 2.5 FSi VR5, 3.2** 09/05 - 110 -184 kW	**22-140012**	**19-140025**	with standard chassis VA: Øa: 55 mm
B6 Sport	**1.0, 1.0 Touring, 1.4 16V, 1.4 FSI, 1.4 TSI, 1.6, 1.6 FSi, 1.6 MultiFuel, 1.8, 1.9 SDi, 1.9 TDI, 1.9 TDI 4motion, 2.0, 2.0 FSI, 2.0 FSI 4motion, 2.0 GTD, 2.0 SDI, 2.0 TDI, 2.0 TDI 4motion, 2.0 TDI 16V, 2.0 TDI 16V 4motion** 08/04 - 47 -125 kW	**35-113751**	**24-172936**	mark: G02 VA: Øa: 50 mm
B6 Sport	**1.0, 1.0 Touring, 1.4 16V, 1.4 FSI, 1.4 TSI, 1.6, 1.6 FSi, 1.6 MultiFuel, 1.8, 1.8 GTi, 1.9 SDi, 1.9 TDI, 1.9 TDI 4motion, 2.0, 2.0 FSI, 2.0 FSI 4motion, 2.0 GTD, 2.0 GTI, 2.0 SDI, 2.0 TDI, 2.0 TDI 4motion, 2.0 TDI 16V, 2.0 TDI 16V 4motion, 2.5 FSi VR5, 3.2, 3.2 R32 4motion** 01/04 - 47 -184 kW	**35-108177**	**24-172936**	mark: G07, G08, G09, G11 VA: Øa: 55 mm
B8	**1.0, 1.0 Touring, 1.4 16V, 1.4 FSI, 1.4 TSI, 1.6, 1.6 FSi, 1.6 MultiFuel, 1.8, 1.9 SDi, 1.9 TDI, 1.9 TDI 4motion, 2.0, 2.0 FSI, 2.0 FSI 4motion, 2.0 GTD, 2.0 SDI, 2.0 TDI, 2.0 TDI 4motion, 2.0 TDI 16V, 2.0 TDI 16V 4motion** 08/04 - 47 -125 kW	**35-113768**	**24-178006**	mark: G02 VA: Øa: 50 mm
B8	**1.0, 1.0 Touring, 1.4 16V, 1.4 FSI, 1.4 TSI, 1.6, 1.6 FSi, 1.6 MultiFuel, 1.8, 1.8 GTi, 1.9 SDi, 1.9 TDI, 1.9 TDI 4motion, 2.0, 2.0 FSI, 2.0 FSI 4motion, 2.0 GTD, 2.0 GTI, 2.0 SDI, 2.0 TDI, 2.0 TDI 4motion, 2.0 TDI 16V, 2.0 TDI 16V 4motion, 2.5 FSi VR5, 3.2, 3.2 R32 4motion** 01/04 - 47 -184 kW	**35-108191**	**24-178006**	mark: G07, G08, G09, G11 VA: Øa: 55 mm
B12 PK	**1.4 16V, 1.4 FSI, 1.6, 1.6 FSi, 1.6 MultiFuel** 10/03 - 55 -85 kW	**46-184047**		outside diameter strut 50 mm; mark: G02; Conditions see certificates VA: lowering (expertise): 30 mm; axle load to: 1010 kg HA: lowering (expertise): 30 mm; axle load to: 1010 kg
B12 PK	**1.4 16V, 1.4 FSI, 1.6, 1.6 FSi, 1.6 MultiFuel** 10/03 - 55 -85 kW	**46-194855**		outside diameter strut 55 mm; mark: G07, G08, G09, G11; Conditions see certificates VA: lowering (expertise): 30 mm; axle load to: 1010 kg HA: lowering (expertise): 30 mm; axle load to: 1010 kg
B12 PK	**1.4 TSI, 1.6, 1.6 MultiFuel, 1.8, 1.9 SDi, 1.9 TDI, 2.0, 2.0 FSI** 01/04 - 47 -125 kW	**46-184115**		outside diameter strut 50 mm; mark: G02; Conditions see certificates VA: lowering (expertise): 30 mm; axle load to: 1080 kg HA: lowering (expertise): 30 mm; axle load to: 1010 kg
B12 PK	**1.4 TSI, 1.6, 1.6 MultiFuel, 1.8, 1.9 SDi, 1.9 TDI, 2.0, 2.0 FSI** 01/04 - 47 -125 kW	**46-194862**		outside diameter strut 55 mm; mark: G07, G08, G09, G11; Conditions see certificates VA: lowering (expertise): 30 mm; axle load to: 1080 kg HA: lowering (expertise): 30 mm; axle load to: 1010 kg
B12 PK	**1.6 FSi** 10/03 - 74 -85 kW	**46-184115**		outside diameter strut 50 mm; mark: G02; Conditions see certificates; automatic transmission VA: lowering (expertise): 30 mm; axle load to: 1080 kg HA: lowering (expertise): 30 mm; axle load to: 1010 kg
B12 PK	**1.6 FSi** 10/03 - 74 -85 kW	**46-194862**		outside diameter strut 55 mm; mark: G07, G08, G09, G11; Conditions see certificates; automatic transmission VA: lowering (expertise): 30 mm; axle load to: 1080 kg HA: lowering (expertise): 30 mm; axle load to: 1010 kg
B12 PK	**1.9 TDI 4motion, 2.0 FSI 4motion, 2.0 TDI 4motion, 2.0 TDI 16V 4motion** 08/04 - 77 -110 kW	**46-184474**		outside diameter strut 50 mm; mark: G02; Conditions see certificates VA: lowering (expertise): 30 mm; axle load to: 1110 kg HA: lowering (expertise): 30 mm; axle load to: 980 kg

V

VW			
VW GOLF V (1K1)			
B12 PK	**1.9 TDI 4motion, 2.0 FSI 4motion, 2.0 TDI 4motion, 2.0 TDI 16V 4motion** 08/04 - 77 -110 kW	**46-194961**	outside diameter strut 55 mm; mark: G07,G08,G09,G011; Conditions see certificates VA: lowering (expertise): 30 mm; axle load to: 1110 kg HA: lowering (expertise): 30 mm; axle load to: 980 kg
B12 PK	**1.9 SDi, 1.9 TDI** 10/03 - 47 -77 kW	**46-184153**	outside diameter strut 50 mm; mark: G02; Conditions see certificates; automatic transmission VA: lowering (expertise): 30 mm; axle load to: 1150 kg HA: lowering (expertise): 30 mm; axle load to: 1010 kg
B12 PK	**1.9 SDi, 1.9 TDI** 10/03 - 47 -77 kW	**46-194879**	outside diameter strut 55 mm; mark: G07; G08; G09;G11; Conditions see certificates; automatic transmission VA: lowering (expertise): 30 mm; axle load to: 1150 kg HA: lowering (expertise): 30 mm; axle load to: 1010 kg
B12 PK	**2.0 GTD, 2.0 SDI, 2.0 TDI, 2.0 TDI 16V** 10/03 - 55 -125 kW	**46-184153**	outside diameter strut 50 mm; mark: G02; Conditions see certificates VA: lowering (expertise): 30 mm; axle load to: 1150 kg HA: lowering (expertise): 30 mm; axle load to: 1010 kg
B12 PK	**2.0 GTD, 2.0 SDI, 2.0 TDI, 2.0 TDI 16V** 10/03 - 55 -125 kW	**46-194879**	outside diameter strut 55 mm; mark: G07; G08; G09;G11; Conditions see certificates VA: lowering (expertise): 30 mm; axle load to: 1150 kg HA: lowering (expertise): 30 mm; axle load to: 1010 kg
B12 SL	**1.4 16V, 1.4 FSI, 1.4 TSI, 1.6, 1.6 FSi, 1.6 MultiFuel, 1.8, 2.0, 2.0 FSI** 10/03 - 55 -125 kW	**46-183767**	outside diameter strut 50 mm; mark: G02; Conditions see certificates VA: lowering (expertise): 45-50 mm; axle load to: 1040 kg HA: lowering (expertise): 30-35 mm; axle load to: 930 kg
B12 SL	**1.4 16V, 1.4 FSI, 1.4 TSI, 1.6, 1.6 FSi, 1.6 MultiFuel, 1.8, 2.0, 2.0 FSI** 10/03 - 55 -125 kW	**46-194909**	outside diameter strut 55 mm; mark: G07, G08,G09,G011; Conditions see certificates VA: lowering (expertise): 45-50 mm; axle load to: 1040 kg HA: lowering (expertise): 30-35 mm; axle load to: 930 kg
B12 SL	**1.4 TSI, 1.8 GTi, 2.0 GTI** 09/06 - 90 -169 kW	**46-183767**	outside diameter strut 50 mm; mark: G02; mark: GT, GTI; Conditions see certificates VA: lowering (expertise): 20-25 mm; axle load to: 1040 kg HA: lowering (expertise): 20 mm; axle load to: 930 kg
B12 SL	**1.4 TSI, 1.8 GTi, 2.0 GTI** 09/06 - 90 -169 kW	**46-194909**	outside diameter strut 55 mm; mark: G07, G08,G09,G011; mark: GT,GTI; Conditions see certificates VA: lowering (expertise): 20-25 mm; axle load to: 1040 kg HA: lowering (expertise): 20 mm; axle load to: 930 kg
B12 SL	**1.9 SDi, 1.9 TDI, 2.0 FSI, 2.0 GTD, 2.0 SDI, 2.0 TDI, 2.0 TDI 16V** 10/03 - 47 -125 kW	**46-183774**	outside diameter strut 50 mm; mark: G02; Conditions see certificates VA: lowering (expertise): 45-50 mm; axle load to: 1130 kg HA: lowering (expertise): 30-35 mm; axle load to: 930 kg
B12 SL	**1.9 SDi, 1.9 TDI, 2.0 GTD, 2.0 GTI, 2.0 SDI, 2.0 TDI, 2.0 TDI 16V** 10/03 - 47 -169 kW	**46-183774**	outside diameter strut 50 mm; mark: G02; mark: GT,GTI; Conditions see certificates VA: lowering (expertise): 20-25 mm; axle load to: 1130 kg HA: lowering (expertise): 20 mm; axle load to: 930 kg
B12 SL	**1.9 SDi, 1.9 TDI, 2.0 FSI, 2.0 GTD, 2.0 SDI, 2.0 TDI, 2.0 TDI 16V** 10/03 - 47 -125 kW	**46-194916**	outside diameter strut 55 mm; mark: G07,G08,G09,G011; Conditions see certificates VA: lowering (expertise): 45-50 mm; axle load to: 1130 kg HA: lowering (expertise): 30-35 mm; axle load to: 930 kg
B12 SL	**1.9 SDi, 1.9 TDI, 2.0 GTD, 2.0 GTI, 2.0 SDI, 2.0 TDI, 2.0 TDI 16V** 10/03 - 47 -169 kW	**46-194916**	outside diameter strut 55 mm; mark: G07,G08,G09,G011; mark: GT,GTI; Conditions see certificates VA: lowering (expertise): 20-25 mm; axle load to: 1130 kg HA: lowering (expertise): 20 mm; axle load to: 930 kg
B14	**1.0, 1.0 Touring, 1.4 16V, 1.4 FSI, 1.4 TSI, 1.6, 1.6 FSi, 1.6 MultiFuel, 1.8, 1.9 SDi, 1.9 TDI, 1.9 TDI 4motion, 2.0, 2.0 FSI, 2.0 FSI 4motion, 2.0 GTD, 2.0 SDI, 2.0 TDI, 2.0 TDI 4motion, 2.0 TDI 16V, 2.0 TDI 16V 4motion** 08/04 - 47 -125 kW	**47-128347**	outside diameter strut 50 mm; mark: G02; Conditions see certificates VA: lowering (expertise): 30-50 mm; axle load to: 1210 kg HA: lowering (expertise): 30-50 mm; axle load to: 1100 kg
B14	**1.0, 1.0 Touring, 1.4 16V, 1.4 FSI, 1.4 TSI, 1.6, 1.6 FSi, 1.6 MultiFuel, 1.8, 1.9 SDi, 1.9 TDI, 1.9 TDI 4motion, 2.0, 2.0 FSI, 2.0 FSI 4motion, 2.0 GTD, 2.0 SDI, 2.0 TDI, 2.0 TDI 4motion, 2.0 TDI 16V, 2.0 TDI 16V 4motion** 08/04 - 47 -125 kW	**47-127708**	outside diameter strut 55 mm; mark: G07, G08, G09, G11; Conditions see certificates VA: lowering (expertise): 30-50 mm; axle load to: 1210 kg HA: lowering (expertise): 30-50 mm; axle load to: 1100 kg
B14	**1.8 GTi, 2.0 GTI, 2.5 FSi VR5, 3.2, 3.2 R32 4motion** 11/05 - 110 -184 kW	**47-127708**	outside diameter strut 55 mm; Conditions see certificates VA: lowering (expertise): 20-30 mm; axle load to: 1210 kg HA: lowering (expertise): 10-30 mm; axle load to: 1100 kg

V

VW

VW GOLF V (1K1)

B16 PSS10	**1.0, 1.0 Touring, 1.4 16V, 1.4 FSI, 1.4 TSI, 1.6, 1.6 FSi, 1.6 MultiFuel, 1.8, 1.9 SDi, 1.9 TDI, 1.9 TDI 4motion, 2.0, 2.0 FSI, 2.0 FSI 4motion, 2.0 GTD, 2.0 SDI, 2.0 TDI, 2.0 TDI 4motion, 2.0 TDI 16V, 2.0 TDI 16V 4motion** 08/04 - 47 -125 kW	**48-135238**		outside diameter strut 50 mm; mark: G02; Conditions see certificates VA: lowering (expertise): 30-50 mm; axle load to: 1210 kg HA: lowering (expertise): 30-50 mm; axle load to: 1100 kg
B16 PSS10	**1.0, 1.0 Touring, 1.4 16V, 1.4 FSI, 1.4 TSI, 1.6, 1.6 FSi, 1.6 MultiFuel, 1.8, 1.9 SDi, 1.9 TDI, 1.9 TDI 4motion, 2.0, 2.0 FSI, 2.0 FSI 4motion, 2.0 GTD, 2.0 SDI, 2.0 TDI, 2.0 TDI 4motion, 2.0 TDI 16V, 2.0 TDI 16V 4motion** 08/04 - 47 -125 kW	**48-135245**		outside diameter strut 55 mm; mark: G07, G08, G09, G11; Conditions see certificates VA: lowering (expertise): 30-50 mm; axle load to: 1210 kg HA: lowering (expertise): 30-50 mm; axle load to: 1100 kg
B16 PSS10	**1.8 GTi, 2.0 GTI, 2.5 FSi VR5, 3.2, 3.2 R32 4motion** 11/05 - 110 -184 kW	**48-135245**		outside diameter strut 55 mm; Conditions see certificates VA: lowering (expertise): 20-30 mm; axle load to: 1210 kg HA: lowering (expertise): 10-30 mm; axle load to: 1100 kg
B16 RC	**1.0, 1.0 Touring, 1.4 16V, 1.4 FSI, 1.4 TSI, 1.6, 1.6 FSi, 1.6 MultiFuel, 1.8, 1.9 SDi, 1.9 TDI, 1.9 TDI 4motion, 2.0, 2.0 FSI, 2.0 FSI 4motion, 2.0 GTD, 2.0 SDI, 2.0 TDI, 2.0 TDI 4motion, 2.0 TDI 16V, 2.0 TDI 16V 4motion** 08/04 - 47 -125 kW	**49-196849**		Øa: 55 mm; disconect DCC; without electronic suspension control; mark: G07, G08, G09, G11; Conditions see certificates VA: lowering (expertise): 20-40 mm; axle load to: 1140 kg HA: lowering (expertise): 20-40 mm; axle load to: 1040 kg
B16 RC	**1.8 GTi, 2.0 GTI, 2.5 FSi VR5, 3.2, 3.2 R32 4motion** 11/05 - 110 -184 kW	**49-196849**		Øa: 55 mm; disconect DCC; without electronic suspension control; mark: G07, G08, G09, G11; Conditions see certificates VA: lowering (expertise): 10-30 mm; axle load to: 1140 kg HA: lowering (expertise): 10-30 mm; axle load to: 1040 kg
B16 BCS	**1.8 GTi, 2.0 GTD, 2.0 GTI, 3.2, 3.2 R32 4motion** 11/05 - 125 -184 kW	**48-215909**		outside diameter strut 55 mm; Conditions see certificates VA: lowering (expertise): 30-40 mm; axle load to: 1210 kg HA: lowering (expertise): 20-40 mm; axle load to: 1100 kg

VW GOLF V Variant (1K5)

B1	**1.4, 1.4 TSI, 1.6, 1.6 MultiFuel, 1.9 TDI, 1.9 TDI 4motion, 2.0, 2.0 TDI, 2.0 TDI 16V, 2.0 TDI 4motion** 06/07 - 59 -147 kW	**12-224074**	**12-224081**	VA: with ball bearing HA: without ball bearing
B3	**1.4** 06/07 - 59 kW	**37-133030**	**36-134076**	with standard chassis
B3	**1.4** 06/07 - 59 kW	**37-133498**	**36-148158**	with standard chassis; Heavy Duty Version .
B3	**1.4 TSI, 1.6** 06/07 - 75 -90 kW	**37-133498**	**36-134076**	with standard chassis
B3	**1.4 TSI, 1.6** 06/07 - 75 -90 kW	**37-133757**	**36-148158**	with standard chassis; Heavy Duty Version .
B3	**1.4 TSI, 1.9 TDI, 2.0** 06/07 - 77 -147 kW	**37-133757**	**36-148158**	with standard chassis
B3	**1.4 TSI, 1.9 TDI, 2.0** 06/07 - 77 -147 kW	**37-148140**	**36-148240**	with standard chassis; Heavy Duty Version .
B3	**2.0 TDI, 2.0 TDI 16V** 06/07 - 100 -103 kW	**37-148140**	**36-148158**	with standard chassis
B3	**2.0 TDI, 2.0 TDI 16V** 06/07 - 100 -103 kW	**37-148102**	**36-148240**	with standard chassis; Heavy Duty Version .
B4	**1.4, 1.4 TSI, 1.6, 1.6 MultiFuel, 1.9 TDI, 2.0, 2.0 TDI, 2.0 TDI 16V** 06/07 - 59 -147 kW	**22-131607**	**19-139333**	with standard chassis VA: Øa: 50 mm; mark: G02

VW

VW GOLF V Variant (1K5)

B4	**1.4, 1.4 TSI, 1.6, 1.6 MultiFuel, 1.9 TDI, 2.0, 2.0 TDI, 2.0 TDI 16V** 06/07 - 59 -147 kW	**22-131614**	**19-139333**	with standard chassis VA: Øa: 55 mm; mark: G07,G08
B6 Sport	**1.4, 1.4 TSI, 1.6, 1.6 MultiFuel, 1.9 TDI, 1.9 TDI 4motion, 2.0, 2.0 TDI, 2.0 TDI 16V, 2.0 TDI 4motion** 06/07 - 59 -147 kW	**35-113751**	**24-172936**	mark: G02 VA: Øa: 50 mm
B6 Sport	**1.4, 1.4 TSI, 1.6, 1.6 MultiFuel, 1.9 TDI, 1.9 TDI 4motion, 2.0, 2.0 TDI, 2.0 TDI 16V, 2.0 TDI 4motion** 06/07 - 59 -147 kW	**35-108177**	**24-172936**	mark: G07,G08 VA: Øa: 55 mm
B8	**1.4, 1.4 TSI, 1.6, 1.6 MultiFuel, 1.9 TDI, 1.9 TDI 4motion, 2.0, 2.0 TDI, 2.0 TDI 16V, 2.0 TDI 4motion** 06/07 - 59 -147 kW	**35-113768**	**24-178006**	mark: G02 VA: Øa: 50 mm
B8	**1.4, 1.4 TSI, 1.6, 1.6 MultiFuel, 1.9 TDI, 1.9 TDI 4motion, 2.0, 2.0 TDI, 2.0 TDI 16V, 2.0 TDI 4motion** 06/07 - 59 -147 kW	**35-108191**	**24-178006**	mark: G07,G08 VA: Øa: 55 mm
B12 PK	**1.4 TSI, 1.9 TDI** 06/07 - 77 -125 kW	**46-184191**		outside diameter strut 50 mm; mark: G02; Conditions see certificates VA: lowering (expertise): 30 mm; axle load to: 1080 kg HA: lowering (expertise): 30 mm; axle load to: 1010 kg
B12 PK	**1.4 TSI, 1.9 TDI** 06/07 - 77 -125 kW	**46-194985**		outside diameter strut 55 mm; mark: G07,G08; Conditions see certificates VA: lowering (expertise): 30 mm; axle load to: 1080 kg HA: lowering (expertise): 30 mm; axle load to: 1010 kg
B12 PK	**1.6** 06/07 - 75 kW	**46-184184**		outside diameter strut 50 mm; mark: G02; Conditions see certificates VA: lowering (expertise): 30 mm; axle load to: 1010 kg HA: lowering (expertise): 30 mm; axle load to: 1010 kg
B12 PK	**1.6** 06/07 - 75 kW	**46-184191**		outside diameter strut 50 mm; mark: G02; Conditions see certificates; automatic transmission VA: lowering (expertise): 30 mm; axle load to: 1080 kg HA: lowering (expertise): 30 mm; axle load to: 1010 kg
B12 PK	**1.6** 06/07 - 75 kW	**46-194978**		outside diameter strut 55 mm; mark: G07,G08; Conditions see certificates VA: lowering (expertise): 30 mm; axle load to: 1010 kg HA: lowering (expertise): 30 mm; axle load to: 1010 kg
B12 PK	**1.6** 06/07 - 75 kW	**46-194985**		outside diameter strut 55 mm; mark: G07,G08; Conditions see certificates; automatic transmission VA: lowering (expertise): 30 mm; axle load to: 1080 kg HA: lowering (expertise): 30 mm; axle load to: 1010 kg
B12 PK	**1.9 TDI** 06/07 - 77 kW	**46-184214**		outside diameter strut 50 mm; mark: G02; with DSG; Conditions see certificates VA: lowering (expertise): 30 mm; axle load to: 1150 kg HA: lowering (expertise): 30 mm; axle load to: 1010 kg
B12 PK	**1.9 TDI** 06/07 - 77 kW	**46-194992**		outside diameter strut 55 mm; mark: G07,G08; with DSG; Conditions see certificates VA: lowering (expertise): 30 mm; axle load to: 1150 kg HA: lowering (expertise): 30 mm; axle load to: 1010 kg
B12 PK	**2.0 TDI, 2.0 TDI 16V** 06/07 - 100 -103 kW	**46-184214**		outside diameter strut 50 mm; mark: G02; Conditions see certificates VA: lowering (expertise): 30 mm; axle load to: 1150 kg HA: lowering (expertise): 30 mm; axle load to: 1010 kg
B12 PK	**2.0 TDI, 2.0 TDI 16V** 06/07 - 100 -103 kW	**46-194992**		outside diameter strut 55 mm; mark: G07,G08; Conditions see certificates VA: lowering (expertise): 30 mm; axle load to: 1150 kg HA: lowering (expertise): 30 mm; axle load to: 1010 kg
B14	**1.4, 1.4 TSI, 1.6, 1.6 MultiFuel, 1.9 TDI, 1.9 TDI 4motion, 2.0, 2.0 TDI, 2.0 TDI 16V, 2.0 TDI 4motion** 06/07 - 59 -147 kW	**47-128347**		outside diameter strut 50 mm; mark: G02; Conditions see certificates VA: lowering (expertise): 35-50 mm; axle load to: 1210 kg HA: lowering (expertise): 30-50 mm; axle load to: 1100 kg
B14	**1.4, 1.4 TSI, 1.6, 1.6 MultiFuel, 1.9 TDI, 1.9 TDI 4motion, 2.0, 2.0 TDI, 2.0 TDI 16V, 2.0 TDI 4motion** 06/07 - 59 -147 kW	**47-127708**		outside diameter strut 55 mm; mark: G07,G08; Conditions see certificates VA: lowering (expertise): 35-40 mm; axle load to: 1210 kg HA: lowering (expertise): 30-50 mm; axle load to: 1100 kg

VW				
VW GOLF V Variant (1K5)				
B16 PSS10	**1.4, 1.4 TSI, 1.6, 1.6 MultiFuel, 1.9 TDI, 1.9 TDI 4motion, 2.0, 2.0 TDI, 2.0 TDI 16V, 2.0 TDI 4motion** 06/07 - 59 -147 kW	**48-135238**		outside diameter strut 50 mm; mark: G02; Conditions see certificates VA: lowering (expertise): 30-50 mm; axle load to: 1210 kg HA: lowering (expertise): 30-50 mm; axle load to: 1100 kg
B16 PSS10	**1.4, 1.4 TSI, 1.6, 1.6 MultiFuel, 1.9 TDI, 1.9 TDI 4motion, 2.0, 2.0 TDI, 2.0 TDI 16V, 2.0 TDI 4motion** 06/07 - 59 -147 kW	**48-135245**		outside diameter strut 55 mm; mark: G07,G08; Conditions see certificates VA: lowering (expertise): 35-50 mm; axle load to: 1210 kg HA: lowering (expertise): 30-50 mm; axle load to: 1100 kg
B16 RC	**1.4, 1.4 TSI, 1.6, 1.6 MultiFuel, 1.9 TDI, 1.9 TDI 4motion, 2.0, 2.0 TDI, 2.0 TDI 16V, 2.0 TDI 4motion** 06/07 - 59 -147 kW	**49-196849**		Øa: 55 mm; disconect DCC; without electronic suspension control; mark: G07, G08, G09, G11; Conditions see certificates VA: lowering (expertise): 20-40 mm; axle load to: 1140 kg HA: lowering (expertise): 20-40 mm; axle load to: 1040 kg
VW GOLF VI (5K1)				
B1	**1.2 TSI, 1.4, 1.4 TSI, 1.6, 1.6 BiFuel, 1.6 MultiFuel, 1.6 TDI, 1.8 TSI, 2.0, 2.0 R 4motion, 2.0 TDI, 2.0 TDI 4motion, 2.0 TSI** 04/09 - 59 -199 kW	**12-224074**	**12-224081**	VA: with ball bearing HA: without ball bearing
B4	**1.2 TSI, 1.4, 1.4 TSI, 1.6, 1.6 BiFuel, 1.6 MultiFuel, 1.6 TDI, 1.8 TSI, 2.0, 2.0 TDI, 2.0 TDI 4motion, 2.0 TSI** 04/09 - 59 -173 kW	**22-183712**	**19-183749**	without electronic suspension control; with standard chassis; mark: G02 VA: outside diameter strut 50 mm
B4	**1.2 TSI, 1.4, 1.4 TSI, 1.6, 1.6 BiFuel, 1.6 MultiFuel, 1.6 TDI, 1.8 TSI, 2.0, 2.0 TDI, 2.0 TDI 4motion, 2.0 TSI** 04/09 - 59 -173 kW	**22-183729**	**19-183749**	without electronic suspension control; with standard chassis; mark: G07, G08, G09, G11 VA: outside diameter strut 55 mm
B6 Sport	**1.2 TSI, 1.4, 1.4 TSI, 1.6, 1.6 BiFuel, 1.6 MultiFuel, 1.6 TDI, 1.8 TSI, 2.0, 2.0 TDI, 2.0 TDI 4motion, 2.0 TSI** 04/09 - 59 -173 kW	**35-158707**	**33-158723**	without electronic suspension control; mark: G02 VA: outside diameter strut 50 mm
B6 Sport	**1.2 TSI, 1.4, 1.4 TSI, 1.6, 1.6 BiFuel, 1.6 MultiFuel, 1.6 TDI, 1.8 TSI, 2.0, 2.0 TDI, 2.0 TDI 4motion, 2.0 TSI** 04/09 - 59 -173 kW	**35-158714**	**33-158723**	without electronic suspension control; mark: G07, G08, G09, G11 VA: outside diameter strut 55 mm
B6 Sport	**2.0 R 4motion** 11/09 - 188 -199 kW	**35-158745**	**24-158756**	disconect DCC; without electronic suspension control VA: outside diameter strut 55 mm
B8	**1.2 TSI, 1.4, 1.4 TSI, 1.6, 1.6 BiFuel, 1.6 MultiFuel, 1.6 TDI, 1.8 TSI, 2.0, 2.0 TDI, 2.0 TDI 4motion, 2.0 TSI** 04/09 - 59 -173 kW	**35-158738**	**24-158756**	without electronic suspension control; mark: G02 VA: outside diameter strut 50 mm
B8	**1.2 TSI, 1.4, 1.4 TSI, 1.6, 1.6 BiFuel, 1.6 MultiFuel, 1.6 TDI, 1.8 TSI, 2.0, 2.0 TDI, 2.0 TDI 4motion, 2.0 TSI** 04/09 - 59 -173 kW	**35-158745**	**24-158756**	without electronic suspension control; mark: G07, G08, G09, G11 VA: outside diameter strut 55 mm
B12 PK	**1.2 TSI, 1.4, 1.4 TSI, 1.6, 1.6 TDI, 2.0 TDI** 04/09 - 59 -125 kW	**46-187949**		disconect DCC; outside diameter strut 55 mm; without electronic suspension control; mark: G07, G08, G09, G11; Conditions see certificates VA: lowering (expertise): 30 mm; axle load to: 1010 kg HA: without ride height adjustment; lowering (expertise): 30 mm; axle load to: 940 kg
B12 PK	**1.2 TSI, 1.4, 1.4 TSI, 1.6, 1.6 TDI, 2.0 TDI** 04/09 - 59 -125 kW	**46-184481**		disconect DCC; outside diameter strut 50 mm; without electronic suspension control; mark: G02; Conditions see certificates VA: lowering (expertise): 30 mm; axle load to: 1010 kg HA: without ride height adjustment; lowering (expertise): 30 mm; axle load to: 940 kg
B12 PK	**1.4 TSI, 1.6 TDI, 2.0 TDI** 10/08 - 66 -125 kW	**46-187956**		disconect DCC; outside diameter strut 55 mm; without electronic suspension control; mark: G07, G08, G09, G11; Conditions see certificates VA: lowering (expertise): 30 mm; axle load to: 1120 kg HA: without ride height adjustment; lowering (expertise): 30 mm; axle load to: 940 kg

VW			
VW GOLF VI (5K1)			
B12 PK	**1.4 TSI, 1.6 TDI, 2.0 TDI** 10/08 - 66 -125 kW	**46-184498**	disconect DCC; outside diameter strut 50 mm; without electronic suspension control; mark: G02; Conditions see certificates VA: lowering (expertise): 30 mm; axle load to: 1120 kg HA: without ride height adjustment; lowering (expertise): 30 mm; axle load to: 940 kg
B12 SL	**1.2 TSI, 1.4, 1.4 TSI, 1.6, 1.6 TDI** 02/09 - 59 -118 kW	**46-183767**	disconect DCC; outside diameter strut 50 mm; without electronic suspension control; mark: G02; Conditions see certificates VA: lowering (expertise): 45-50 mm; axle load to: 1040 kg HA: without ride height adjustment; lowering (expertise): 30-35 mm; axle load to: 930 kg
B12 SL	**1.2 TSI, 1.4, 1.4 TSI, 1.6, 1.6 TDI** 02/09 - 59 -118 kW	**46-188076**	disconect DCC; outside diameter strut 55 mm; without electronic suspension control; mark: G07, G08, G09, G11; Conditions see certificates VA: lowering (expertise): 45-50 mm; axle load to: 1040 kg HA: without ride height adjustment; lowering (expertise): 30-35 mm; axle load to: 930 kg
B12 SL	**1.4 TSI, 1.8 TSI, 2.0, 2.0 TDI, 2.0 TSI** 10/08 - 81 -173 kW	**46-183774**	disconect DCC; outside diameter strut 50 mm; without electronic suspension control; mark: G02; Conditions see certificates VA: lowering (expertise): 45-50 mm; axle load to: 1130 kg HA: without ride height adjustment; lowering (expertise): 30-35 mm; axle load to: 930 kg
B12 SL	**1.4 TSI, 1.8 TSI, 2.0, 2.0 TDI, 2.0 TSI** 10/08 - 81 -173 kW	**46-188069**	disconect DCC; outside diameter strut 55 mm; without electronic suspension control; mark: G07, G08, G09, G11; Conditions see certificates VA: lowering (expertise): 45-50 mm; axle load to: 1130 kg HA: without ride height adjustment; lowering (expertise): 30-35 mm; axle load to: 930 kg
B14	**1.2 TSI, 1.4, 1.4 TSI, 1.6, 1.6 BiFuel, 1.6 MultiFuel, 1.6 TDI, 1.8 TSI, 2.0, 2.0 TDI, 2.0 TDI 4motion, 2.0 TSI** 04/09 - 59 -173 kW	**47-158276**	disconect DCC; outside diameter strut 50 mm; without electronic suspension control; mark: G02; Conditions see certificates VA: lowering (expertise): 20-40 mm; axle load to: 1140 kg HA: lowering (expertise): 20-40 mm; axle load to: 1040 kg
B14	**1.2 TSI, 1.4, 1.4 TSI, 1.6, 1.6 BiFuel, 1.6 MultiFuel, 1.6 TDI, 1.8 TSI, 2.0, 2.0 TDI, 2.0 TDI 4motion, 2.0 TSI** 04/09 - 59 -173 kW	**47-158283**	disconect DCC; outside diameter strut 55 mm; without electronic suspension control; mark: G07, G08, G09, G11; Conditions see certificates VA: lowering (expertise): 20-40 mm; axle load to: 1140 kg HA: lowering (expertise): 20-40 mm; axle load to: 1040 kg
B14	**2.0 R 4motion** 11/09 - 188 -199 kW	**47-158283**	disconect DCC; outside diameter strut 55 mm; without electronic suspension control; mark: G07, G08, G09, G11; Conditions see certificates VA: lowering (expertise): 10-30 mm; axle load to: 1140 kg HA: lowering (expertise): 10-30 mm; axle load to: 1040 kg
B16 PSS10	**1.2 TSI, 1.4, 1.4 TSI, 1.6, 1.6 BiFuel, 1.6 MultiFuel, 1.6 TDI, 1.8 TSI, 2.0, 2.0 TDI, 2.0 TDI 4motion, 2.0 TSI** 04/09 - 59 -173 kW	**48-156745**	disconect DCC; outside diameter strut 50 mm; without electronic suspension control; mark: G02; Conditions see certificates VA: lowering (expertise): 20-40 mm; axle load to: 1140 kg HA: lowering (expertise): 20-40 mm; axle load to: 1040 kg
B16 PSS10	**1.2 TSI, 1.4, 1.4 TSI, 1.6, 1.6 BiFuel, 1.6 MultiFuel, 1.6 TDI, 1.8 TSI, 2.0, 2.0 TDI, 2.0 TDI 4motion, 2.0 TSI** 04/09 - 59 -173 kW	**48-158176**	disconect DCC; outside diameter strut 55 mm; without electronic suspension control; mark: G07, G08, G09, G11; Conditions see certificates VA: lowering (expertise): 20-40 mm; axle load to: 1140 kg HA: lowering (expertise): 20-40 mm; axle load to: 1040 kg
B16 PSS10	**2.0 R 4motion** 11/09 - 188 -199 kW	**48-158176**	disconect DCC; outside diameter strut 55 mm; without electronic suspension control; mark: G07, G08, G09, G11; Conditions see certificates VA: lowering (expertise): 10-30 mm; axle load to: 1140 kg HA: lowering (expertise): 10-30 mm; axle load to: 1040 kg
B16 RC	**1.2 TSI, 1.4, 1.4 TSI, 1.6, 1.6 BiFuel, 1.6 MultiFuel, 1.6 TDI, 1.8 TSI, 2.0, 2.0 TDI, 2.0 TDI 4motion, 2.0 TSI** 04/09 - 59 -173 kW	**49-196849**	Øa: 55 mm; disconect DCC; without electronic suspension control; mark: G07, G08, G09, G11; Conditions see certificates VA: lowering (expertise): 20-40 mm; axle load to: 1140 kg HA: lowering (expertise): 20-40 mm; axle load to: 1040 kg
B16 RC	**2.0 R 4motion** 11/09 - 188 -199 kW	**49-196849**	Øa: 55 mm; disconect DCC; without electronic suspension control; mark: G07, G08, G09, G11; Conditions see certificates VA: lowering (expertise): 10-30 mm; axle load to: 1140 kg HA: lowering (expertise): 10-30 mm; axle load to: 1040 kg
B16 BCS	**2.0, 2.0 TDI, 2.0 TSI** 04/09 - 125 -173 kW	**48-215909**	disconect DCC; outside diameter strut 55 mm; Conditions see certificates VA: lowering (expertise): 30-40 mm; axle load to: 1140 kg HA: lowering (expertise): 20-40 mm; axle load to: 1040 kg

V

VW				
VW GOLF VI (5K1)				
B16 BCS	**2.0 R 4motion** 11/09 - 188 -199 kW		**48-215909**	disconect DCC; outside diameter strut 55 mm; Conditions see certificates VA: lowering (expertise): 20-30 mm; axle load to: 1140 kg HA: lowering (expertise): 10-30 mm; axle load to: 1040 kg
VW GOLF VI Variant (AJ5)				
B1	**1.2 TSI, 1.4, 1.4 TSI, 1.6, 1.6 MultiFuel, 1.6 TDI, 1.6 TDI 4motion, 2.0 TDI** 07/09 - 59 -118 kW		**12-224074**	**12-224081**	VA: with ball bearing HA: without ball bearing
B4	**1.2 TSI, 1.4, 1.4 TSI, 1.6, 1.6 MultiFuel, 1.6 TDI, 1.6 TDI 4motion, 2.0 TDI** 07/09 - 59 -118 kW		**22-183712**	**19-183749**	without electronic suspension control; with standard chassis; mark: G02 VA: outside diameter strut 50 mm
B4	**1.2 TSI, 1.4, 1.4 TSI, 1.6, 1.6 MultiFuel, 1.6 TDI, 1.6 TDI 4motion, 2.0 TDI** 07/09 - 59 -118 kW		**22-183729**	**19-183749**	without electronic suspension control; with standard chassis; mark: G07, G08, G09, G11 VA: outside diameter strut 55 mm
B6 Sport	**1.2 TSI, 1.4, 1.4 TSI, 1.6, 1.6 MultiFuel, 1.6 TDI, 1.6 TDI 4motion, 2.0 TDI** 07/09 - 59 -118 kW		**35-158707**	**33-158723**	without electronic suspension control; mark: G02 VA: outside diameter strut 50 mm
B6 Sport	**1.2 TSI, 1.4, 1.4 TSI, 1.6, 1.6 MultiFuel, 1.6 TDI, 1.6 TDI 4motion, 2.0 TDI** 07/09 - 59 -118 kW		**35-158714**	**33-158723**	without electronic suspension control; mark: G07, G08, G09, G11 VA: outside diameter strut 55 mm
B8	**1.2 TSI, 1.4, 1.4 TSI, 1.6, 1.6 MultiFuel, 1.6 TDI, 1.6 TDI 4motion, 2.0 TDI** 07/09 - 59 -118 kW		**35-158738**	**24-158756**	without electronic suspension control; mark: G02 VA: outside diameter strut 50 mm
B8	**1.2 TSI, 1.4, 1.4 TSI, 1.6, 1.6 MultiFuel, 1.6 TDI, 1.6 TDI 4motion, 2.0 TDI** 07/09 - 59 -118 kW		**35-158745**	**24-158756**	without electronic suspension control; mark: G07, G08, G09, G11 VA: outside diameter strut 55 mm
B12 PK	**1.2 TSI, 1.4, 1.4 TSI, 1.6, 1.6 MultiFuel, 1.6 TDI** 07/09 - 59 -118 kW		**46-187963**	outside diameter strut 55 mm; without electronic suspension control; mark: G07, G08, G09, G11; Conditions see certificates VA: lowering (expertise): 25-30 mm; axle load to: 1010 kg HA: without ride height adjustment; lowering (expertise): 30 mm; axle load to: 1000 kg
B12 PK	**1.2 TSI, 1.4, 1.4 TSI, 1.6, 1.6 MultiFuel, 1.6 TDI** 07/09 - 59 -118 kW		**46-184504**	outside diameter strut 50 mm; without electronic suspension control; mark: G02; Conditions see certificates VA: lowering (expertise): 25-30 mm; axle load to: 1010 kg HA: without ride height adjustment; lowering (expertise): 30 mm; axle load to: 1000 kg
B12 PK	**1.4 TSI, 1.6 TDI, 2.0 TDI** 07/09 - 66 -118 kW		**46-187970**	outside diameter strut 55 mm; without electronic suspension control; mark: G07, G08, G09, G11; Conditions see certificates VA: lowering (expertise): 25-30 mm; axle load to: 1120 kg HA: without ride height adjustment; lowering (expertise): 30 mm; axle load to: 1000 kg
B12 PK	**1.4 TSI, 1.6 TDI, 2.0 TDI** 07/09 - 66 -118 kW		**46-184511**	outside diameter strut 50 mm; without electronic suspension control; mark: G02; Conditions see certificates VA: lowering (expertise): 25-30 mm; axle load to: 1120 kg HA: without ride height adjustment; lowering (expertise): 30 mm; axle load to: 1000 kg
B14	**1.2 TSI, 1.4, 1.4 TSI, 1.6, 1.6 MultiFuel, 1.6 TDI, 1.6 TDI 4motion, 2.0 TDI** 07/09 - 59 -118 kW		**47-128347**	outside diameter strut 50 mm; without electronic suspension control; mark: G02; Conditions see certificates VA: lowering (expertise): 35-50 mm; axle load to: 1210 kg HA: lowering (expertise): 30-50 mm; axle load to: 1100 kg
B14	**1.2 TSI, 1.4, 1.4 TSI, 1.6, 1.6 MultiFuel, 1.6 TDI, 1.6 TDI 4motion, 2.0 TDI** 07/09 - 59 -118 kW		**47-127708**	outside diameter strut 55 mm; without electronic suspension control; mark: G07, G08, G09, G11; Conditions see certificates VA: lowering (expertise): 30-50 mm; axle load to: 1210 kg HA: lowering (expertise): 30-50 mm; axle load to: 1100 kg
B16 PSS10	**1.2 TSI, 1.4, 1.4 TSI, 1.6, 1.6 MultiFuel, 1.6 TDI, 1.6 TDI 4motion, 2.0 TDI** 07/09 - 59 -118 kW		**48-135238**	outside diameter strut 50 mm; without electronic suspension control; mark: G02; Conditions see certificates VA: lowering (expertise): 30-50 mm; axle load to: 1210 kg HA: lowering (expertise): 30-50 mm; axle load to: 1100 kg
B16 PSS10	**1.2 TSI, 1.4, 1.4 TSI, 1.6, 1.6 MultiFuel, 1.6 TDI, 1.6 TDI 4motion, 2.0 TDI** 07/09 - 59 -118 kW		**48-135245**	outside diameter strut 55 mm; without electronic suspension control; mark: G07, G08, G09, G11; Conditions see certificates VA: lowering (expertise): 30-50 mm; axle load to: 1210 kg HA: lowering (expertise): 30-50 mm; axle load to: 1100 kg

V

VW

VW GOLF VI Variant (AJ5)

B16 RC	**1.2 TSI, 1.4, 1.4 TSI, 1.6, 1.6 MultiFuel, 1.6 TDI, 1.6 TDI 4motion, 2.0 TDI** 07/09 - 59 -118 kW	**49-196849**		Øa: 55 mm; disconect DCC; without electronic suspension control; mark: G07, G08, G09, G11; Conditions see certificates VA: lowering (expertise): 10-30 mm; axle load to: 1140 kg HA: lowering (expertise): 10-30 mm; axle load to: 1040 kg

VW GOLF VI Convertible

B1	**1.2 TSI, 1.4 TSI, 1.6 TDI, 2.0 TDI, 2.0 TSI** 03/11 - 77 -155 kW	**12-224074**	**12-224081**	VA: with ball bearing HA: without ball bearing
B4	**1.2 TSI, 1.4 TSI, 1.6 TDI, 2.0 TDI, 2.0 TSI** 03/11 - 77 -155 kW	**22-131607**	**19-172996**	with standard chassis; without electronic suspension control; mark: G02 VA: Øa: 50 mm
B4	**1.2 TSI, 1.4 TSI, 1.6 TDI, 2.0 TDI, 2.0 TSI** 03/11 - 77 -155 kW	**22-131614**	**19-172996**	with standard chassis; without electronic suspension control; mark: G07, G08 VA: Øa: 55 mm
B6 Sport	**1.2 TSI, 1.4 TSI, 1.6 TDI, 2.0 TDI, 2.0 TSI** 03/11 - 77 -155 kW	**35-108177**	**24-172936**	with standard chassis; without electronic suspension control VA: Øa: 55 mm
B8	**1.2 TSI, 1.4 TSI, 1.6 TDI, 2.0 TDI, 2.0 TSI** 03/11 - 77 -155 kW	**35-108191**	**24-178006**	with sports suspension; without electronic suspension control; mark: G07, G08 VA: Øa: 55 mm
B12 PK	**1.2 TSI** 03/11 - 77 kW	**46-184504**		outside diameter strut 50 mm; without electronic suspension control; mark: G02; Conditions see certificates VA: lowering (expertise): 25 mm; axle load to: 1010 kg HA: without ride height adjustment; lowering (expertise): 20 mm; axle load to: 1000 kg
B12 PK	**1.2 TSI** 03/11 - 77 kW	**46-187963**		disconect DCC; outside diameter strut 55 mm; without electronic suspension control; mark: G07, G08; without ride height adjustment; Conditions see certificates VA: lowering (expertise): 25 mm; axle load to: 1010 kg HA: lowering (expertise): 20 mm; axle load to: 1000 kg
B12 PK	**1.4 TSI, 1.6 TDI, 2.0 TDI, 2.0 TSI** 03/11 - 77 -155 kW	**46-187970**		outside diameter strut 55 mm; without electronic suspension control; mark: G07, G08, G09, G11; Conditions see certificates VA: lowering (expertise): 25 mm; axle load to: 1120 kg HA: without ride height adjustment; lowering (expertise): 20 mm; axle load to: 1000 kg
B12 PK	**1.4 TSI, 1.6 TDI, 2.0 TDI, 2.0 TSI** 03/11 - 77 -155 kW	**46-184511**		outside diameter strut 50 mm; without electronic suspension control; mark: G02; Conditions see certificates VA: lowering (expertise): 25 mm; axle load to: 1130 kg HA: without ride height adjustment; lowering (expertise): 20 mm; axle load to: 1000 kg
B12 SL	**1.2 TSI, 1.4 TSI, 1.6 TDI, 2.0 TDI, 2.0 TSI** 03/11 - 77 -155 kW	**46-183446**		outside diameter strut 50 mm; mark: G02; Conditions see certificates VA: lowering (expertise): 45-50 mm; axle load to: 1130 kg HA: lowering (expertise): 35-40 mm; axle load to: 1005 kg
B12 SL	**1.2 TSI, 1.4 TSI, 1.6 TDI, 2.0 TDI, 2.0 TSI** 03/11 - 77 -155 kW	**46-194688**		outside diameter strut 55 mm; mark: G07, G08; Conditions see certificates VA: lowering (expertise): 35 mm; axle load to: 1130 kg HA: lowering (expertise): 30 mm; axle load to: 1005 kg
B14	**1.2 TSI, 1.4 TSI, 1.6 TDI, 2.0 TDI, 2.0 TSI** 03/11 - 77 -155 kW	**47-127708**		disconect DCC; outside diameter strut 55 mm; without electronic suspension control; Conditions see certificates VA: lowering (expertise): 40-50 mm; axle load to: 1210 kg HA: lowering (expertise): 30-50 mm; axle load to: 1100 kg
B16 PSS10	**1.2 TSI, 1.4 TSI, 1.6 TDI, 2.0 TDI, 2.0 TSI** 03/11 - 77 -155 kW	**48-135245**		disconect DCC; outside diameter strut 55 mm; without electronic suspension control; Conditions see certificates VA: lowering (expertise): 40-50 mm; axle load to: 1210 kg HA: lowering (expertise): 30-50 mm; axle load to: 1100 kg
B16 RC	**1.2 TSI, 1.4 TSI, 1.6 TDI, 2.0 TDI, 2.0 TSI** 03/11 - 77 -155 kW	**49-196849**		Øa: 55 mm; disconect DCC; without electronic suspension control; mark: G07, G08, G09, G11; Conditions see certificates VA: lowering (expertise): 10-30 mm; axle load to: 1140 kg HA: lowering (expertise): 10-30 mm; axle load to: 1040 kg

V

VW				
VW GOLF PLUS (5M1, 521)				
B1	**1.0, 1.0 GLS, 1.2 TSI, 1.4 16V, 1.4 FSI, 1.4 TSI, 1.6, 1.6 FSI, 1.6 Multifuel, 1.6 TDI, 1.8, 1.8 Hybrid, 1.9 SDi, 1.9 TDI, 2.0 FSI, 2.0 TDI, 2.0 TDI 16V** 01/05 - 47 -125 kW	**12-224074**	**12-224081**	VA: with ball bearing HA: without ball bearing
B3	**1.4 16V, 1.4 FSI, 1.4 TSI, 1.6, 1.6 FSI** 01/05 - 55 -125 kW	**37-133498**	**36-134076**	with standard chassis
B3	**2.0 TDI, 2.0 TDI 16V** 01/05 - 81 -103 kW	**37-148140**	**36-148158**	with standard chassis
B4	**1.0, 1.0 GLS, 1.2 TSI, 1.4 16V, 1.4 FSI, 1.4 TSI, 1.6, 1.6 FSI, 1.6 Multifuel, 1.6 TDI, 1.8, 1.8 Hybrid, 1.9 SDi, 1.9 TDI, 2.0 FSI, 2.0 TDI, 2.0 TDI 16V** 01/05 - 47 -125 kW	**22-131607**	**19-151069**	mark: G02 VA: Øa: 50 mm; mark: G02
B4	**1.0, 1.0 GLS, 1.2 TSI, 1.4 16V, 1.4 FSI, 1.4 TSI, 1.6, 1.6 FSI, 1.6 Multifuel, 1.6 TDI, 1.8, 1.8 Hybrid, 1.9 SDi, 1.9 TDI, 2.0 FSI, 2.0 TDI, 2.0 TDI 16V** 01/05 - 47 -125 kW	**22-139320**	**19-151069**	mark: G07, G08 VA: Øa: 55 mm; mark: G07
B6 Sport	**1.0, 1.0 GLS, 1.2 TSI, 1.4 16V, 1.4 FSI, 1.4 TSI, 1.6, 1.6 FSI, 1.6 Multifuel, 1.6 TDI, 1.8, 1.8 Hybrid, 1.9 SDi, 1.9 TDI, 2.0 FSI, 2.0 TDI, 2.0 TDI 16V** 01/05 - 47 -125 kW	**35-113751**	**24-172936**	mark: G02 VA: Øa: 50 mm; mark: G02
B6 Sport	**1.0, 1.0 GLS, 1.2 TSI, 1.4 16V, 1.4 FSI, 1.4 TSI, 1.6, 1.6 FSI, 1.6 Multifuel, 1.6 TDI, 1.8, 1.8 Hybrid, 1.9 SDi, 1.9 TDI, 2.0 FSI, 2.0 TDI, 2.0 TDI 16V** 01/05 - 47 -125 kW	**35-108177**	**24-172936**	mark: G07, G08 VA: Øa: 55 mm; mark: G07
B8	**1.0, 1.0 GLS, 1.2 TSI, 1.4 16V, 1.4 FSI, 1.4 TSI, 1.6, 1.6 FSI, 1.6 Multifuel, 1.6 TDI, 1.8, 1.8 Hybrid, 1.9 SDi, 1.9 TDI, 2.0 FSI, 2.0 TDI, 2.0 TDI 16V** 01/05 - 47 -125 kW	**35-113768**	**24-178006**	mark: G02 VA: Øa: 50 mm; mark: G02
B8	**1.0, 1.0 GLS, 1.2 TSI, 1.4 16V, 1.4 FSI, 1.4 TSI, 1.6, 1.6 FSI, 1.6 Multifuel, 1.6 TDI, 1.8, 1.8 Hybrid, 1.9 SDi, 1.9 TDI, 2.0 FSI, 2.0 TDI, 2.0 TDI 16V** 01/05 - 47 -125 kW	**35-108191**	**24-178006**	mark: G07, G08 VA: Øa: 55 mm; mark: G07
B12 PK	**1.2 TSI, 1.4 16V, 1.4 FSI, 1.6, 1.6 FSI** 01/05 - 55 -85 kW	**46-184320**		outside diameter strut 50 mm; mark: G02; Conditions see certificates VA: lowering (expertise): 30 mm; axle load to: 1010 kg HA: lowering (expertise): 30 mm; axle load to: 1010 kg
B12 PK	**1.2 TSI** 11/09 - 63 -77 kW	**46-184337**		outside diameter strut 50 mm; mark: G02; with DSG; Conditions see certificates VA: lowering (expertise): 30 mm; axle load to: 1080 kg HA: lowering (expertise): 30 mm; axle load to: 1010 kg
B12 PK	**1.2 TSI, 1.4 16V, 1.4 FSI, 1.6, 1.6 FSI** 01/05 - 55 -85 kW	**46-194787**		outside diameter strut 55 mm; mark: G07, G08; Conditions see certificates VA: lowering (expertise): 30 mm; axle load to: 1010 kg HA: lowering (expertise): 30 mm; axle load to: 1010 kg
B12 PK	**1.2 TSI** 11/09 - 63 -77 kW	**46-194794**		outside diameter strut 55 mm; mark: G07, G08; with DSG; Conditions see certificates VA: lowering (expertise): 30 mm; axle load to: 1080 kg HA: lowering (expertise): 30 mm; axle load to: 1010 kg
B12 PK	**1.4 TSI, 1.9 TDI, 2.0 FSI** 05/05 - 66 -125 kW	**46-184337**		outside diameter strut 50 mm; mark: G02; Conditions see certificates VA: lowering (expertise): 30 mm; axle load to: 1080 kg HA: lowering (expertise): 30 mm; axle load to: 1010 kg
B12 PK	**1.4 TSI, 1.9 TDI, 2.0 FSI** 05/05 - 66 -125 kW	**46-194794**		outside diameter strut 55 mm; mark: G07, G08; Conditions see certificates VA: lowering (expertise): 30 mm; axle load to: 1080 kg HA: lowering (expertise): 30 mm; axle load to: 1010 kg

VW			
VW GOLF PLUS (5M1, 521)			
B12 PK	**1.6, 1.6 FSI** 01/05 - 67 -85 kW	**46-184337**	outside diameter strut 50 mm; mark: G02; Conditions see certificates; automatic transmission VA: lowering (expertise): 30 mm; axle load to: 1080 kg HA: lowering (expertise): 30 mm; axle load to: 1010 kg
B12 PK	**1.6, 1.6 FSI** 01/05 - 67 -85 kW	**46-194794**	outside diameter strut 55 mm; mark: G07, G08; Conditions see certificates; automatic transmission VA: lowering (expertise): 30 mm; axle load to: 1080 kg HA: lowering (expertise): 30 mm; axle load to: 1010 kg
B12 PK	**1.6 TDI, 2.0 TDI** 12/05 - 66 -103 kW	**46-184344**	outside diameter strut 50 mm; mark: G02; Conditions see certificates VA: lowering (expertise): 30 mm; axle load to: 1150 kg HA: lowering (expertise): 30 mm; axle load to: 1010 kg
B12 PK	**1.6 TDI, 2.0 TDI** 12/05 - 66 -103 kW	**46-194800**	outside diameter strut 55 mm; mark: G07, G08; Conditions see certificates VA: lowering (expertise): 30 mm; axle load to: 1150 kg HA: lowering (expertise): 30 mm; axle load to: 1010 kg
B12 PK	**1.9 TDI** 01/05 - 01/09 66 -77 kW	**46-184344**	outside diameter strut 50 mm; mark: G02; with DSG; Conditions see certificates VA: lowering (expertise): 30 mm; axle load to: 1150 kg HA: lowering (expertise): 30 mm; axle load to: 1010 kg
B12 PK	**1.9 TDI** 01/05 - 01/09 66 -77 kW	**46-194800**	outside diameter strut 55 mm; mark: G07, G08; with DSG; Conditions see certificates VA: lowering (expertise): 30 mm; axle load to: 1150 kg HA: lowering (expertise): 30 mm; axle load to: 1010 kg
B12 SL	**1.2 TSI, 1.4 16V, 1.4 FSI, 1.4 TSI, 1.6, 1.6 FSI, 2.0 TDI** 12/05 - 55 -125 kW	**46-183781**	outside diameter strut 50 mm; mark: G02; Conditions see certificates VA: lowering (expertise): 45-50 mm; axle load to: 1040 kg HA: lowering (expertise): 45-50 mm; axle load to: 1010 kg
B12 SL	**1.2 TSI, 1.4 16V, 1.4 FSI, 1.4 TSI, 1.6, 1.6 FSI** 01/05 - 55 -125 kW	**46-194817**	outside diameter strut 55 mm; mark: G07,08; Conditions see certificates VA: lowering (expertise): 45-50 mm; axle load to: 1040 kg HA: lowering (expertise): 45-50 mm; axle load to: 1010 kg
B12 SL	**1.4 TSI** 05/06 - 90 -125 kW	**46-183798**	outside diameter strut 50 mm; mark: G02; with DSG; Conditions see certificates VA: lowering (expertise): 45-50 mm; axle load to: 1130 kg HA: lowering (expertise): 45-50 mm; axle load to: 1010 kg
B12 SL	**1.4 TSI** 05/06 - 90 -125 kW	**46-194824**	outside diameter strut 55 mm; mark: G07,08; with DSG; Conditions see certificates VA: lowering (expertise): 45-50 mm; axle load to: 1130 kg HA: lowering (expertise): 45-50 mm; axle load to: 1010 kg
B12 SL	**1.6, 1.6 TDI, 1.9 TDI, 2.0 FSI, 2.0 TDI** 05/05 - 66 -110 kW	**46-183798**	outside diameter strut 50 mm; mark: G02; Conditions see certificates VA: lowering (expertise): 45-50 mm; axle load to: 1130 kg HA: lowering (expertise): 45-50 mm; axle load to: 1010 kg
B12 SL	**1.6, 1.6 TDI, 1.9 TDI, 2.0 FSI, 2.0 TDI** 05/05 - 66 -110 kW	**46-194824**	outside diameter strut 55 mm; mark: G07,08; Conditions see certificates VA: lowering (expertise): 45-50 mm; axle load to: 1130 kg HA: lowering (expertise): 45-50 mm; axle load to: 1010 kg
B12 SL	**1.6 FSI** 01/05 - 05/08 85 kW	**46-183798**	outside diameter strut 50 mm; mark: G02; Conditions see certificates; automatic transmission VA: lowering (expertise): 45-50 mm; axle load to: 1130 kg HA: lowering (expertise): 45-50 mm; axle load to: 1010 kg
B12 SL	**1.6 FSI** 01/05 - 05/08 85 kW	**46-194824**	outside diameter strut 55 mm; mark: G07,08; Conditions see certificates; automatic transmission VA: lowering (expertise): 45-50 mm; axle load to: 1130 kg HA: lowering (expertise): 45-50 mm; axle load to: 1010 kg
B14	**1.0, 1.0 GLS, 1.2 TSI, 1.4 16V, 1.4 FSI, 1.4 TSI, 1.6, 1.6 FSI, 1.6 Multifuel, 1.6 TDI, 1.8, 1.8 Hybrid, 1.9 SDi, 1.9 TDI, 2.0 FSI, 2.0 TDI, 2.0 TDI 16V** 01/05 - 47 -125 kW	**47-128347**	outside diameter strut 50 mm; mark: G02; Conditions see certificates VA: mark: G02; lowering (expertise): 30-50 mm; axle load to: 1210 kg HA: lowering (expertise): 30-50 mm; axle load to: 1100 kg
B14	**1.0, 1.0 GLS, 1.2 TSI, 1.4 16V, 1.4 FSI, 1.4 TSI, 1.6, 1.6 FSI, 1.6 Multifuel, 1.6 TDI, 1.8, 1.8 Hybrid, 1.9 SDi, 1.9 TDI, 2.0 FSI, 2.0 TDI, 2.0 TDI 16V** 01/05 - 47 -125 kW	**47-127708**	outside diameter strut 55 mm; mark: G07, G08; Conditions see certificates VA: mark: G07; lowering (expertise): 30-50 mm; axle load to: 1210 kg HA: lowering (expertise): 30-50 mm; axle load to: 1100 kg
B16 PSS10	**1.0, 1.0 GLS, 1.2 TSI, 1.4 16V, 1.4 FSI, 1.4 TSI, 1.6, 1.6 FSI, 1.6 Multifuel, 1.6 TDI, 1.8, 1.8 Hybrid, 1.9 SDi, 1.9 TDI, 2.0 FSI, 2.0 TDI, 2.0 TDI 16V** 01/05 - 47 -125 kW	**48-135238**	outside diameter strut 50 mm; mark: G02; Conditions see certificates VA: mark: G02; lowering (expertise): 30-50 mm; axle load to: 1210 kg HA: lowering (expertise): 30-50 mm; axle load to: 1100 kg

V

VW

VW GOLF PLUS (5M1, 521)

B16 PSS10	**1.0, 1.0 GLS, 1.2 TSI, 1.4 16V, 1.4 FSI, 1.4 TSI, 1.6, 1.6 FSI, 1.6 Multifuel, 1.6 TDI, 1.8, 1.8 Hybrid, 1.9 SDi, 1.9 TDI, 2.0 FSI, 2.0 TDI, 2.0 TDI 16V** 01/05 - 47 -125 kW	**48-135245**		outside diameter strut 55 mm; mark: G07, G08; Conditions see certificates VA: mark: G07; lowering (expertise): 30-50 mm; axle load to: 1210 kg HA: lowering (expertise): 30-50 mm; axle load to: 1100 kg
B16 RC	**1.0, 1.0 GLS, 1.2 TSI, 1.4 16V, 1.4 FSI, 1.4 TSI, 1.6, 1.6 FSI, 1.6 Multifuel, 1.6 TDI, 1.8, 1.8 Hybrid, 1.9 SDi, 1.9 TDI, 2.0 FSI, 2.0 TDI, 2.0 TDI 16V** 01/05 - 47 -125 kW	**49-196849**		Øa: 55 mm; disconect DCC; without electronic suspension control; mark: G07, G08, G09, G11; Conditions see certificates VA: lowering (expertise): 20-40 mm; axle load to: 1140 kg HA: lowering (expertise): 20-40 mm; axle load to: 1040 kg

VW JETTA I (16)

B1	**1.1, 1.3, 1.5, 1.5 D, 1.6, 1.6 D, 1.6 GLI, 1.6 TD, 1.8** 08/78 - 02/84 37 -82 kW	**12-117369**		VA: Material: Rubber/Metal; with spacer tube
B3	**1.1, 1.3, 1.5, 1.5 D, 1.6, 1.6 D, 1.6 GLI, 1.6 TD, 1.8** 08/78 - 02/84 37 -82 kW	**36-134243**	**36-130955**	with standard chassis
B3	**1.1, 1.3, 1.5, 1.5 D, 1.6, 1.6 D, 1.6 GLI, 1.6 TD, 1.8** 08/78 - 02/84 37 -82 kW	**36-160358**		with standard chassis; Heavy Duty Version .
B4	**1.1, 1.3, 1.5, 1.5 D, 1.6, 1.6 D, 1.6 GLI, 1.6 TD, 1.8** 08/78 - 02/84 37 -82 kW	**21-030338** **11-101345** SP	**19-019550** **11-101345** SP	VA: for bolted struts only
B6 Sport	**1.1, 1.3, 1.5, 1.5 D, 1.6, 1.6 D, 1.6 GLI, 1.6 TD, 1.8** 08/78 - 02/84 37 -82 kW	**34-001370** **11-101345** SP	**24-008372** **11-101345** SP	VA: for bolted struts only
B8	**1.1, 1.3, 1.5, 1.5 D, 1.6, 1.6 D, 1.6 GLI, 1.6 TD, 1.8** 08/78 - 02/84 37 -82 kW	**34-001370** **11-101345** SP	**24-015141** **11-101345** SP	VA: for bolted struts only
B12 PK	**1.1, 1.3, 1.5, 1.5 D, 1.6, 1.6 D, 1.6 GLI, 1.6 TD, 1.8** 08/78 - 02/84 37 -82 kW	**46-189868**		for bolted struts only; Conditions see certificates VA: lowering (expertise): 30-40 mm; axle load to: 785 kg HA: lowering (expertise): 30-35 mm; axle load to: 630 kg

VW JETTA II (19E, 1G2)

B1	**1.3, 1.3 CAT, 1.6, 1.6 D, 1.6 TD, 1.8, 1.8 CAT, 1.8 Syncro, 1.8 16V, 2.0** 01/84 - 07/92 40 -102 kW	**12-117963**	**12-117239**	VA: with ball bearing
B2	**1.3, 1.3 CAT, 1.6, 1.6 D, 1.6 TD, 1.8, 1.8 CAT, 1.8 16V, 2.0** 01/84 - 07/92 40 -102 kW	**17-047142** **16-031456** **11-101291** SP	**15-062192** **11-101352** SP	VA: for bolted struts only
B2	**1.8 Syncro** 08/87 - 07/91 62 -72 kW	**17-047142** **11-101291** SP		
B3	**1.3, 1.3 CAT, 1.6, 1.8, 1.8 CAT** 01/84 - 10/91 40 -82 kW	**36-130665**	**36-130702**	with standard chassis
B3	**1.6 D, 1.6 TD, 2.0** 01/84 - 07/92 40 -100 kW	**36-130696**	**36-130702**	with standard chassis
B4	**1.3, 1.3 CAT, 1.6, 1.6 D, 1.6 TD, 1.8, 1.8 CAT, 1.8 16V, 2.0** 01/84 - 07/92 40 -102 kW	**22-041142** **21-030468** **11-101291** SP	**19-019741** **11-101352** SP	VA: for bolted struts only
B4	**1.3, 1.3 CAT, 1.6, 1.6 D, 1.6 TD, 1.8, 1.8 CAT, 1.8 16V, 2.0** 01/84 - 07/92 40 -102 kW		**19-124681** **11-101352** SP	with off-road suspension
B4	**1.8 Syncro** 08/87 - 07/91 62 -72 kW	**22-041142** **11-101291** SP		

V

VW

VW JETTA II (19E, 1G2)

B6 Sport	**1.3, 1.3 CAT, 1.6, 1.6 D, 1.6 TD, 1.8, 1.8 CAT, 1.8 16V, 2.0** 01/84 - 07/92 40 -102 kW	**34-001028** **35-181590**	**24-006569** **11-101352** SP	VA: for bolted struts only
B6 Sport	**1.8 Syncro** 08/87 - 07/91 62 -72 kW	**35-043911**	**24-629485**	
B8	**1.3, 1.3 CAT, 1.6, 1.6 D, 1.6 TD, 1.8, 1.8 CAT, 1.8 16V, 2.0** 01/84 - 07/92 40 -102 kW	**35-003663** **11-101291** SP	**24-015042** **11-101352** SP	
B8	**1.8 Syncro** 08/87 - 07/91 62 -72 kW	**35-003663**	**24-629485**	
B12 PK	**1.3, 1.3 CAT, 1.6, 1.8, 1.8 CAT, 1.8 16V** 01/84 - 12/89 40 -102 kW	**46-189950**		Conditions see certificates VA: lowering (expertise): 30-40 mm; axle load to: 840 kg HA: lowering (expertise): 30-35 mm; axle load to: 740 kg
B12 PK	**1.6 D, 1.6 TD** 01/84 - 10/91 40 -59 kW	**46-189967**		Conditions see certificates VA: lowering (expertise): 20 mm; axle load to: 840 kg HA: lowering (expertise): 20 mm; axle load to: 740 kg
B14	**1.3, 1.3 CAT, 1.6, 1.6 D, 1.6 TD, 1.8, 1.8 CAT, 1.8 16V, 2.0** 01/84 - 07/92 40 -102 kW	**47-124844**		Spacers required for several wheel/tyre combinations; Conditions see certificates VA: lowering (expertise): 30-50 mm; axle load to: 840 kg HA: lowering (expertise): 20-40 mm; axle load to: 740 kg
B16 PSS9	**1.3, 1.3 CAT, 1.6, 1.6 D, 1.6 TD, 1.8, 1.8 CAT, 1.8 16V, 2.0** 01/84 - 07/92 40 -102 kW	**48-080569**		Spacers required for several wheel/tyre combinations; Conditions see certificates VA: lowering (expertise): 30-50 mm; axle load to: 840 kg HA: lowering (expertise): 20-30 mm; axle load to: 740 kg
MS	**1.3, 1.3 CAT, 1.6, 1.6 D, 1.6 TD, 1.8, 1.8 CAT, 1.8 16V, 2.0** 01/84 - 07/92 40 -102 kW	*35-604525*	*24-627009*	mark: Rallye G. N+A Tarmac VA: Height Adjustable; charakteristic: 230/145 HA: Height Adjustable; with unibal joint bearing; charakteristic: 200/120
MS	**1.8, 1.8 CAT, 1.8 16V, 2.0** 01/84 - 07/92 79 -102 kW	*35-044062*	*24-224024*	HA: charakteristic: 300/120; with unibal joint bearing

VW JETTA III (1K2)

B1	**1.4 TSI, 1.6, 1.6 FSI, 1.6 MultiFuel, 1.6 TDI, 1.9 TDI, 2.0, 2.0 FSI, 2.0 TDI, 2.0 TDI 16V, 2.0 TFSI, 2.5, 2.5 FSI** 01/06 - 10/10 66 -147 kW	**12-224074**	**12-224081**	VA: with ball bearing HA: without ball bearing
B4	**1.4 TSI, 1.6, 1.6 FSI, 1.6 MultiFuel, 1.6 TDI, 1.9 TDI, 2.0, 2.0 FSI, 2.0 TDI, 2.0 TDI 16V, 2.0 TFSI, 2.5, 2.5 FSI** 01/06 - 10/10 66 -147 kW	**22-131607**	**19-127439**	with standard chassis VA: Øa: 50 mm
B4	**1.4 TSI, 1.6, 1.6 FSI, 1.6 MultiFuel, 1.6 TDI, 1.9 TDI, 2.0, 2.0 FSI, 2.0 TDI, 2.0 TDI 16V, 2.0 TFSI, 2.5, 2.5 FSI** 01/06 - 10/10 66 -147 kW	**22-131614**	**19-127439**	with standard chassis VA: Øa: 55 mm
B4	**1.4 TSI, 1.6, 1.6 FSI, 1.6 MultiFuel, 1.6 TDI, 1.9 TDI, 2.0, 2.0 FSI, 2.0 TDI, 2.0 TDI 16V, 2.0 TFSI, 2.5, 2.5 FSI** 01/06 - 10/10 66 -147 kW	**22-139184**	**19-127439**	with sports suspension VA: Øa: 50 mm
B4	**1.4 TSI, 1.6, 1.6 FSI, 1.6 MultiFuel, 1.6 TDI, 1.9 TDI, 2.0, 2.0 FSI, 2.0 TDI, 2.0 TDI 16V, 2.0 TFSI, 2.5, 2.5 FSI** 01/06 - 10/10 66 -147 kW	**22-139191**	**19-127439**	with sports suspension VA: Øa: 55 mm
B6 Sport	**1.4 TSI, 1.6, 1.6 FSI, 1.6 MultiFuel, 1.6 TDI, 1.9 TDI, 2.0, 2.0 FSI, 2.0 TDI, 2.0 TDI 16V, 2.0 TFSI, 2.5, 2.5 FSI** 01/06 - 10/10 66 -147 kW	**35-113751**	**24-172936**	mark: G46, G57, G10 VA: Øa: 50 mm
B6 Sport	**1.4 TSI, 1.6, 1.6 FSI, 1.6 MultiFuel, 1.6 TDI, 1.9 TDI, 2.0, 2.0 FSI, 2.0 TDI, 2.0 TDI 16V, 2.0 TFSI, 2.5, 2.5 FSI** 01/06 - 10/10 66 -147 kW	**35-108177**	**24-172936**	mark: G47, G56 VA: Øa: 55 mm

V

VW				
VW JETTA III (1K2)				
B8	**1.4 TSI, 1.6, 1.6 FSI, 1.6 MultiFuel, 1.6 TDI, 1.9 TDI, 2.0, 2.0 FSI, 2.0 TDI, 2.0 TDI 16V, 2.0 TFSI, 2.5, 2.5 FSI** 01/06 - 10/10 66 -147 kW	**35-113768**	**24-178006**	mark: G46, G57, G10 VA: Øa: 50 mm
B8	**1.4 TSI, 1.6, 1.6 FSI, 1.6 MultiFuel, 1.6 TDI, 1.9 TDI, 2.0, 2.0 FSI, 2.0 TDI, 2.0 TDI 16V, 2.0 TFSI, 2.5, 2.5 FSI** 01/06 - 10/10 66 -147 kW	**35-108191**	**24-178006**	mark: G47, G56 VA: Øa: 55 mm
B12 PK	**1.4 TSI, 1.9 TDI, 2.0, 2.0 FSI, 2.0 TFSI** 10/05 - 10/10 77 -147 kW	**46-184290**		outside diameter strut 55 mm; Conditions see certificates VA: lowering (expertise): 30 mm; axle load to: 1080 kg HA: lowering (expertise): 30 mm; axle load to: 1010 kg
B12 PK	**1.6, 1.6 FSI, 1.6 MultiFuel** 09/05 - 10/10 75 -85 kW	**46-184269**		outside diameter strut 55 mm; Conditions see certificates VA: lowering (expertise): 30 mm; axle load to: 1010 kg HA: lowering (expertise): 30 mm; axle load to: 1010 kg
B12 PK	**1.6, 1.6 FSI, 1.6 TDI** 09/05 - 10/10 66 -85 kW	**46-184290**		outside diameter strut 55 mm; Conditions see certificates; automatic transmission VA: lowering (expertise): 30 mm; axle load to: 1080 kg HA: lowering (expertise): 30 mm; axle load to: 1010 kg
B12 PK	**1.9 TDI** 08/05 - 10/10 77 kW	**46-184313**		outside diameter strut 55 mm; with DSG; Conditions see certificates VA: lowering (expertise): 30 mm; axle load to: 1150 kg HA: lowering (expertise): 30 mm; axle load to: 1010 kg
B12 PK	**2.0 TDI** 09/05 - 10/10 100 -125 kW	**46-184313**		outside diameter strut 55 mm; Conditions see certificates VA: lowering (expertise): 30 mm; axle load to: 1150 kg HA: lowering (expertise): 30 mm; axle load to: 1010 kg
B12 SL	**1.4 TSI, 1.6, 1.6 FSI, 1.9 TDI, 2.0, 2.0 FSI, 2.0 TFSI** 10/05 - 10/10 75 -147 kW	**46-183804**		outside diameter strut 55 mm; Conditions see certificates VA: lowering (expertise): 45-50 mm; axle load to: 1040 kg HA: lowering (expertise): 45-50 mm; axle load to: 1005 kg
B12 SL	**1.9 TDI, 2.0 TDI, 2.0 TDI 16V, 2.0 TFSI** 08/05 - 10/10 77 -147 kW	**46-183811**		outside diameter strut 55 mm; Conditions see certificates VA: lowering (expertise): 45-50 mm; axle load to: 1130 kg HA: lowering (expertise): 30-35 mm; axle load to: 1005 kg
B14	**1.4 TSI, 1.6, 1.6 FSI, 1.6 MultiFuel, 1.6 TDI, 1.9 TDI, 2.0, 2.0 FSI, 2.0 TDI, 2.0 TDI 16V, 2.0 TFSI, 2.5, 2.5 FSI** 01/06 - 10/10 66 -147 kW	**47-128347**		outside diameter strut 50 mm; mark: G02; Conditions see certificates VA: lowering (expertise): 30-50 mm; axle load to: 1210 kg HA: lowering (expertise): 30-50 mm; axle load to: 1100 kg
B14	**1.4 TSI, 1.6, 1.6 FSI, 1.6 MultiFuel, 1.6 TDI, 1.9 TDI, 2.0, 2.0 FSI, 2.0 TDI, 2.0 TDI 16V, 2.0 TFSI, 2.5, 2.5 FSI** 01/06 - 10/10 66 -147 kW	**47-127708**		outside diameter strut 55 mm; Conditions see certificates VA: lowering (expertise): 30-50 mm; axle load to: 1210 kg HA: lowering (expertise): 30-50 mm; axle load to: 1100 kg
B16 PSS10	**1.4 TSI, 1.6, 1.6 FSI, 1.6 MultiFuel, 1.6 TDI, 1.9 TDI, 2.0, 2.0 FSI, 2.0 TDI, 2.0 TDI 16V, 2.0 TFSI, 2.5, 2.5 FSI** 01/06 - 10/10 66 -147 kW	**48-135238**		outside diameter strut 50 mm; mark: G02; Conditions see certificates VA: lowering (expertise): 30-50 mm; axle load to: 1210 kg HA: lowering (expertise): 30-50 mm; axle load to: 1100 kg
B16 PSS10	**1.4 TSI, 1.6, 1.6 FSI, 1.6 MultiFuel, 1.6 TDI, 1.9 TDI, 2.0, 2.0 FSI, 2.0 TDI, 2.0 TDI 16V, 2.0 TFSI, 2.5, 2.5 FSI** 01/06 - 10/10 66 -147 kW	**48-135245**		outside diameter strut 55 mm; Conditions see certificates VA: mark: G07, G08; lowering (expertise): 30-50 mm; axle load to: 1210 kg HA: lowering (expertise): 30-50 mm; axle load to: 1100 kg
B16 RC	**1.4 TSI, 1.6, 1.6 FSI, 1.6 MultiFuel, 1.6 TDI, 1.9 TDI, 2.0, 2.0 FSI, 2.0 TDI, 2.0 TDI 16V, 2.0 TFSI, 2.5, 2.5 FSI** 01/06 - 10/10 66 -147 kW	**49-196849**		Øa: 55 mm; disconect DCC; without electronic suspension control; mark: G07, G08, G09, G11; Conditions see certificates VA: lowering (expertise): 20-40 mm; axle load to: 1140 kg HA: lowering (expertise): 20-40 mm; axle load to: 1040 kg
B16 BCS	**2.0 FSI, 2.0 TDI, 2.0 TFSI, 2.5, 2.5 FSI** 08/05 - 10/10 110 -147 kW	**48-215909**		outside diameter strut 55 mm; Conditions see certificates VA: lowering (expertise): 30-40 mm; axle load to: 1210 kg HA: lowering (expertise): 20-40 mm; axle load to: 1095 kg
VW JETTA IV (162)				
B1	**1.2 TSI, 1.4 TSI, 1.6 TDI, 2.0, 2.0 TDI, 2.0 TSI, 2.5 FSI** 04/10 - 77 -147 kW	**12-224074**	**12-224081**	VA: with ball bearing HA: without ball bearing
B4	**1.2 TSI, 1.4 TSI, 1.6 TDI, 2.0, 2.0 TDI, 2.0 TSI, 2.5 FSI** 04/10 - 77 -147 kW	**22-131607**	**19-127439**	with standard chassis; without electronic suspension control; mark: G46, G57, G10 VA: Øa: 50 mm

VW				
VW JETTA IV (162)				
B4	**1.2 TSI, 1.4 TSI, 1.6 TDI, 2.0, 2.0 TDI, 2.0 TSI, 2.5 FSI** 04/10 - 77 -147 kW	**22-131614**	**19-127439**	with standard chassis; without electronic suspension control; mark: G47, G57 VA: Øa: 55 mm
B4	**1.2 TSI, 1.4 TSI, 1.6 TDI, 2.0, 2.0 TDI, 2.0 TSI, 2.5 FSI** 04/10 - 77 -147 kW	**22-139184**	**19-127439**	with sports suspension; without electronic suspension control; mark: G46, G57, G10 VA: Øa: 50 mm
B4	**1.2 TSI, 1.4 TSI, 1.6 TDI, 2.0, 2.0 TDI, 2.0 TSI, 2.5 FSI** 04/10 - 77 -147 kW	**22-139191**	**19-127439**	with sports suspension; without electronic suspension control; mark: G47, G57 VA: Øa: 55 mm
B6 Sport	**1.2 TSI, 1.4 TSI, 1.6 TDI, 2.0, 2.0 TDI, 2.0 TSI, 2.5 FSI** 04/10 - 77 -147 kW	**35-113751**	**24-172936**	without electronic suspension control; mark: G46, G57, G10 VA: Øa: 50 mm
B6 Sport	**1.2 TSI, 1.4 TSI, 1.6 TDI, 2.0, 2.0 TDI, 2.0 TSI, 2.5 FSI** 04/10 - 77 -147 kW	**35-108177**	**24-172936**	without electronic suspension control; mark: G47, G57 VA: Øa: 55 mm
B8	**1.2 TSI, 1.4 TSI, 1.6 TDI, 2.0, 2.0 TDI, 2.0 TSI, 2.5 FSI** 04/10 - 77 -147 kW	**35-113768**	**24-178006**	without electronic suspension control; mark: G46, G57, G10 VA: Øa: 50 mm
B8	**1.2 TSI, 1.4 TSI, 1.6 TDI, 2.0, 2.0 TDI, 2.0 TSI, 2.5 FSI** 04/10 - 77 -147 kW	**35-108191**	**24-178006**	without electronic suspension control; mark: G47, G57 VA: Øa: 55 mm
B14	**1.2 TSI, 1.4 TSI, 1.6 TDI, 2.0, 2.0 TDI, 2.0 TSI, 2.5 FSI** 04/10 - 77 -147 kW	**47-128347**		disconect DCC; outside diameter strut 50 mm; without electronic suspension control; mark: G46, G57, G10; Conditions see certificates VA: lowering (expertise): 30-50 mm; axle load to: 1210 kg HA: lowering (expertise): 30-50 mm; axle load to: 1100 kg
B14	**1.2 TSI, 1.4 TSI, 1.6 TDI, 2.0, 2.0 TDI, 2.0 TSI, 2.5 FSI** 04/10 - 77 -147 kW	**47-127708**		disconect DCC; outside diameter strut 55 mm; without electronic suspension control; mark: G47, G57; Conditions see certificates VA: lowering (expertise): 30-50 mm; axle load to: 1210 kg HA: lowering (expertise): 30-50 mm; axle load to: 1100 kg
B16 PSS10	**1.2 TSI, 1.4 TSI, 1.6 TDI, 2.0, 2.0 TDI, 2.0 TSI, 2.5 FSI** 04/10 - 77 -147 kW	**48-135238**		disconect DCC; outside diameter strut 50 mm; without electronic suspension control; mark: G46, G57, G10; Conditions see certificates VA: lowering (expertise): 30-50 mm; axle load to: 1210 kg HA: lowering (expertise): 30-50 mm; axle load to: 1100 kg
B16 PSS10	**1.2 TSI, 1.4 TSI, 1.6 TDI, 2.0, 2.0 TDI, 2.0 TSI, 2.5 FSI** 04/10 - 77 -147 kW	**48-135245**		disconect DCC; outside diameter strut 55 mm; without electronic suspension control; mark: G47, G57; Conditions see certificates VA: mark: G07, G08; lowering (expertise): 30-50 mm; axle load to: 1210 kg HA: lowering (expertise): 30-50 mm; axle load to: 1100 kg
B16 RC	**1.2 TSI, 1.4 TSI, 1.6 TDI, 2.0, 2.0 TDI, 2.0 TSI, 2.5 FSI** 04/10 - 77 -147 kW	**49-196849**		Øa: 55 mm; disconect DCC; without electronic suspension control; mark: G07, G08, G09, G11; Conditions see certificates VA: lowering (expertise): 20-40 mm; axle load to: 1140 kg HA: lowering (expertise): 20-40 mm; axle load to: 1040 kg
B16 BCS	**2.0 TDI, 2.0 TSI, 2.5 FSI** 04/10 - 103 -147 kW	**48-215909**		disconect DCC; outside diameter strut 55 mm; Conditions see certificates VA: lowering (expertise): 30-40 mm; axle load to: 1210 kg HA: lowering (expertise): 20-40 mm; axle load to: 1095 kg
VW KAEFER				
B3	**1300 1.3, 1302 1.2, 1302 1.3, 1302 1.6, 1303 1.2, 1303 1.3, 1303 1.6, 1303 LS,S 1.6** 08/70 - 12/79 25 -37 kW	**36-160303**		with standard chassis
B6 Sport	**1.1 (Brezel), 1.2, 1200 1.2** 04/49 - 07/65 18 -25 kW		**24-000321**	HA: charakteristic: 280/100
B6 Sport	**1.1 (Brezel), 1.2, 1200 1.2** 04/49 - 07/65 18 -25 kW		**24-181488**	mark: Rennen HA: charakteristic: 330/130
B6 Sport	**1.2** 01/54 - 12/65 22 kW		**24-000338**	mark: Rallye HA: charakteristic: 365/130; with unibal joint bearing

V

VW

VW KAEFER

B6 Sport	**1200 1.2, 1300 1.3, 1500 1.5, 1500 1.6, 1600 (Mexico), 1600 i (Mexico)** 08/65 - 07/03 25 -37 kW	**24-006200**	**24-000321**	manual transmission VA: Only in connection with 131 413 441; Only in connection with 131 413 449 B HA: charakteristic: 280/100
B6 Sport	**1200 1.2, 1300 1.3, 1500 1.5, 1500 1.6, 1600 (Mexico), 1600 i (Mexico)** 08/65 - 07/03 25 -37 kW	**24-006200**	**24-181488**	mark: Rennen; manual transmission VA: Only in connection with 131 413 441; Only in connection with 131 413 449 B HA: charakteristic: 330/130
B6 Sport	**1302 1.2, 1302 1.3, 1302 1.6, 1303 1.2, 1303 1.3, 1303 1.6** 01/70 - 08/73 25 -37 kW	**34-181515**	**24-006347**	
B6 Sport	**1302 1.2, 1302 1.3, 1302 1.6, 1303 1.2, 1303 1.3, 1303 1.6** 01/70 - 08/73 25 -37 kW	**34-181515**	**24-000345**	firmer setting HA: charakteristic: 350/160
B6 Sport	**1303 1.2, 1303 1.3, 1303 1.6, 1303 LS,S 1.6** 09/73 - 12/79 25 -37 kW	**34-000403**	**24-006347**	VA: Suspension Strut Manufacturer Boge; for bolted struts only
B6 Sport	**1303 1.2, 1303 1.3, 1303 1.6, 1303 LS,S 1.6** 09/73 - 12/79 25 -37 kW	**34-000403**	**24-000345**	firmer setting VA: Suspension Strut Manufacturer Boge; for bolted struts only HA: charakteristic: 350/160
B6 Sport	**1300 1.3, 1500 1.5, 1500 1.6** 08/67 - 01/73 27 -37 kW	**24-006200**	**24-000345**	automatic transmission VA: Only in connection with 131 413 441; Only in connection with 131 413 449 B HA: charakteristic: 350/160

VW KAEFER Convertible (15)

B6 Sport	**1302 1.3, 1302 1.6, 1302,1303 1.6, 1303 1.3, 1303 1.6, 1500 1.5, 1500 1.6** 01/70 - 08/73 29 -37 kW	**34-181515**	**24-006347**	
B6 Sport	**1302 1.3, 1302 1.6, 1302,1303 1.6, 1303 1.3, 1303 1.6, 1500 1.5, 1500 1.6** 01/70 - 08/73 29 -37 kW	**34-181515**	**24-000345**	firmer setting HA: charakteristic: 350/160
B6 Sport	**1302 1.3, 1302 1.6, 1302,1303 1.6, 1303 1.2, 1303 1.3, 1303 1.6** 09/73 - 03/81 25 -37 kW	**34-000403**	**24-006347**	VA: Suspension Strut Manufacturer Boge; for bolted struts only
B6 Sport	**1302 1.3, 1302 1.6, 1302,1303 1.6, 1303 1.2, 1303 1.3, 1303 1.6** 09/73 - 03/81 25 -37 kW	**34-000403**	**24-000345**	firmer setting VA: Suspension Strut Manufacturer Boge; for bolted struts only HA: charakteristic: 350/160

VW LUPO (6X1, 6E1)

B1	**1.0, 1.4, 1.4 16V, 1.4 FSI, 1.4 TDI, 1.6 GTI, 1.7 SDI** 09/98 - 07/05 37 -92 kW	**12-116959**		VA: with ball bearing
B2	**1.0, 1.4, 1.4 16V, 1.4 TDI, 1.7 SDI** 09/98 - 07/05 37 -74 kW	**17-106405** **11-101307** SP	**11-149828** SP	
B3	**1.0, 1.4** 09/98 - 07/05 37 -44 kW	*37-155131*	**36-134250**	with standard chassis
B3	**1.0, 1.4, 1.4 16V, 1.4 TDI, 1.7 SDI** 09/98 - 07/05 37 -55 kW	*36-134267*		with standard chassis; Heavy Duty Version .
B3	**1.4 16V, 1.4 TDI, 1.7 SDI** 09/98 - 07/05 44 -55 kW	**37-131425**	**36-134250**	with standard chassis
B3	**1.4 FSI** 02/01 - 07/05 77 kW	**37-131425**	**36-160631**	with standard chassis
B3	**1.6 GTI** 09/00 - 07/05 92 kW	**37-134211**	**36-160631**	with standard chassis
B3	**1.2 TDI 3L, 1.4 16V** 07/99 - 07/05 45 -74 kW	*37-155131*	**36-160631**	with standard chassis

V

VW

VW LUPO (6X1, 6E1)

B3	**1.2 TDI 3L, 1.4 16V, 1.4 FSI, 1.6 GTI** 07/99 - 07/05 45 -92 kW	*36-134267*	**36-134250**	with standard chassis; Heavy Duty Version .
B4	**1.0, 1.4, 1.4 16V, 1.4 FSI, 1.4 TDI, 1.7 SDI** 09/98 - 07/05 37 -77 kW	**22-044761** **11-101307** SP	**19-067803** **11-149828** SP	
B6 Sport	**1.0, 1.4, 1.4 16V, 1.4 TDI, 1.7 SDI** 09/98 - 07/05 37 -74 kW	**35-046196**	**24-028066**	
B8	**1.0, 1.4, 1.4 16V, 1.4 FSI, 1.4 TDI, 1.7 SDI** 09/98 - 07/05 37 -77 kW	**35-046202**	**24-028073**	
B8	**1.6 GTI** 09/00 - 07/05 92 kW	**35-051442**	**24-028073**	
B10	**1.0, 1.4, 1.4 16V, 1.4 FSI, 1.4 TDI, 1.7 SDI** 09/98 - 07/05 37 -77 kW	**46-112019**		Conditions see certificates VA: lowering (expertise): 60 mm; axle load to: 790 kg HA: lowering (expertise): 40 mm
B10	**1.0, 1.4, 1.4 16V, 1.4 FSI, 1.4 TDI, 1.7 SDI** 09/98 - 07/05 37 -77 kW	**46-112002**		Conditions see certificates VA: lowering (expertise): 60 mm; axle load from: 791 kg HA: lowering (expertise): 40 mm
B12 PK	**1.0, 1.4, 1.4 16V, 1.4 FSI, 1.4 TDI, 1.6 GTI, 1.7 SDI** 09/98 - 07/05 37 -92 kW	**46-190833**		Conditions see certificates VA: lowering (expertise): 30 mm; axle load to: 820 kg HA: lowering (expertise): 30 mm; axle load to: 690 kg
MS	**1.0, 1.4, 1.4 16V, 1.4 FSI, 1.4 TDI, 1.7 SDI** 09/98 - 07/05 37 -77 kW	*35-607885*	*24-607896*	mark: Lupo Cup; Without roadworthy certificate VA: Height Adjustable HA: with unibal joint bearing; rebound: 50 mm

VW NEW BEETLE (9C1, 1C1)

B1	**1.4, 1.6, 1.8 T, 1.9 TDI, 2.0, 2.3 V5, 2.5 Turbo, RSI 3.2** 04/00 - CH-Nr. 55 -165 kW		**12-117079**	-> CH.Nr.: 1C-1-405 000; -> CH.Nr.: 9C-1-603 000 HA: without ball bearing; Material: Rubber/Metal; Material: Aluminium
B1	**1.4, 1.6, 1.8 T, 1.9 TDI, 2.0, 2.3 V5, 2.5 Turbo** CH-Nr. - 55 -132 kW		**12-117840**	CH.Nr.: 1C-1-405 001 ->; CH.Nr.: 9C-1-603 001 ->
B3	**1.4, 1.6, 1.8 T** 10/99 - 55 -132 kW	**37-163075**	**36-134113**	with standard chassis
B3	**1.4, 1.6, 1.8 T, 1.9 TDI, 2.0, 2.5 Turbo** 01/98 - 55 -132 kW		**36-131297**	with standard chassis; Heavy Duty Version .
B3	**1.9 TDI, 2.0, 2.5 Turbo** 01/98 - 66 -110 kW	**37-134211**	**36-134113**	with standard chassis
B4	**1.4, 1.6, 1.8 T, 1.9 TDI, 2.0, 2.3 V5, 2.5 Turbo** 10/00 - 55 -132 kW	**22-045744** **11-103455** SP	**19-029429** **11-115755** SP	with standard chassis
B4	**1.4, 1.6, 1.8 T, 1.9 TDI, 2.0, 2.3 V5, 2.5 Turbo** 10/00 - 55 -132 kW	**22-045751** **11-103455** SP	**19-029177** **11-115755** SP	with sports suspension
B4	**1.4, 1.6, 1.8 T, 1.9 TDI, 2.0, 2.3 V5, 2.5 Turbo** 10/00 - 55 -132 kW	**22-045744** **11-103455** SP	**19-140032** **11-115755** SP	with off-road suspension
B6 Sport	**1.4, 1.6, 1.8 T, 1.9 TDI, 2.0, 2.3 V5, 2.5 Turbo** 10/00 - 55 -132 kW	**35-044079**	**24-026239** **11-115755** SP	mono-tube VA: Mono Tube Upside Down
B8	**1.4, 1.6, 1.8 T, 1.9 TDI, 2.0, 2.3 V5, 2.5 Turbo** 10/00 - 55 -132 kW	**35-044086**	**24-026246** **11-115755** SP	mono-tube

V

VW

VW NEW BEETLE (9C1, 1C1)

B12 PK	**1.4, 1.6, 1.8 T, 1.9 TDI, 2.0** 01/98 - 55 -132 kW	**46-000378**		Conditions see certificates VA: lowering (expertise): 30 mm; axle load to: 1010 kg HA: lowering (expertise): 30 mm; axle load to: 850 kg
B12 PK	**1.8 T, 1.9 TDI, 2.3 V5** 01/98 - 66 -132 kW	**46-000361**		Conditions see certificates VA: lowering (expertise): 30 mm; axle load to: 1050 kg HA: lowering (expertise): 30 mm; axle load to: 850 kg
B14	**1.4, 1.6, 1.8 T, 1.9 TDI, 2.0, 2.3 V5, 2.5 Turbo** 10/00 - 55 -132 kW	**47-124851**		Spacers required for several wheel/tyre combinations; Conditions see certificates VA: lowering (expertise): 25-45 mm; axle load to: 1060 kg HA: lowering (expertise): 20-40 mm; axle load to: 1010 kg
B14	**RSI 3.2** 04/00 - 05/01 165 kW	**47-080416**		Conditions see certificates VA: lowering (expertise): 10-30 mm; axle load to: 1110 kg HA: lowering (expertise): 10-30 mm; axle load to: 1080 kg
B16 PSS9	**1.4, 1.6, 1.8 T, 1.9 TDI, 2.0, 2.3 V5, 2.5 Turbo** 10/00 - 55 -132 kW	**48-080651**		Spacers required for several wheel/tyre combinations; Conditions see certificates VA: lowering (expertise): 25-45 mm; axle load to: 1060 kg HA: lowering (expertise): 20-40 mm; axle load to: 1010 kg
B16 PSS9	**RSI 3.2** 04/00 - 05/01 165 kW	**48-080422**		Conditions see certificates VA: lowering (expertise): 10-30 mm; axle load to: 1110 kg HA: lowering (expertise): 10-30 mm; axle load to: 1080 kg

VW NEW BEETLE Convertible (1Y7)

B4	**1.4, 1.6, 1.8 T, 1.9 TDI, 2.0, 2.5 Turbo** 09/02 - 55 -110 kW	**22-045744** **11-103455** SP	**19-029429** **11-115755** SP	with standard chassis
B4	**1.4, 1.6, 1.8 T, 1.9 TDI, 2.0, 2.5 Turbo** 09/02 - 55 -110 kW	**22-045751** **11-103455** SP	**19-029177** **11-115755** SP	with sports suspension
B4	**1.4, 1.6, 1.8 T, 1.9 TDI, 2.0, 2.5 Turbo** 09/02 - 55 -110 kW	**22-045744** **11-103455** SP	**19-140032** **11-115755** SP	with off-road suspension
B6 Sport	**1.4, 1.6, 1.8 T, 1.9 TDI, 2.0, 2.5 Turbo** 09/02 - 55 -110 kW	**35-044079**	**24-026239** **11-115755** SP	VA: Mono Tube Upside Down
B8	**1.4, 1.6, 1.8 T, 1.9 TDI, 2.0, 2.5 Turbo** 09/02 - 55 -110 kW	**35-044086**	**24-026246** **11-115755** SP	VA: Mono Tube Upside Down
B12 PK	**1.4, 1.6, 1.9 TDI, 2.0** 09/02 - 55 -85 kW	**46-184023**		Conditions see certificates VA: lowering (expertise): 25 mm; axle load to: 1010 kg HA: lowering (expertise): 25 mm; axle load to: 870 kg
B12 PK	**1.8 T, 1.9 TDI, 2.0** 09/02 - 74 -110 kW	**46-184030**		Conditions see certificates VA: lowering (expertise): 25 mm; axle load to: 1050 kg HA: lowering (expertise): 25 mm; axle load to: 870 kg
B14	**1.4, 1.6, 1.8 T, 1.9 TDI, 2.0, 2.5 Turbo** 09/02 - 55 -110 kW	**47-124851**		Spacers required for several wheel/tyre combinations; Conditions see certificates VA: lowering (expertise): 25-45 mm; axle load to: 1060 kg HA: lowering (expertise): 20-40 mm; axle load to: 1010 kg
B16 PSS9	**1.4, 1.6, 1.8 T, 1.9 TDI, 2.0, 2.5 Turbo** 09/02 - 55 -110 kW	**48-080651**		Spacers required for several wheel/tyre combinations; Conditions see certificates VA: lowering (expertise): 25-45 mm; axle load to: 1060 kg HA: lowering (expertise): 20-40 mm; axle load to: 1010 kg

VW PASSAT (32)

B3	**1.3, 1.5, 1.6** 05/73 - 07/80 40 -63 kW	*36-160372*		with standard chassis
B4	**1.3, 1.5, 1.5 D, 1.6, 1.6 GLi** 05/73 - 07/80 37 -81 kW	**21-030406** **11-101307** SP	*19-019512*	VA: Øa: 50 mm
B6 Sport	**1.3, 1.5, 1.5 D, 1.6, 1.6 GLi** 05/73 - 07/80 37 -81 kW	*34-000144*		VA: Quick Repair Service .; Used part return required .

VW PASSAT Variant (33)

B3	**1.3, 1.5, 1.6, 1.6 i** 05/73 - 07/80 40 -81 kW	*36-160372*	*36-134281*	with standard chassis

VW				
VW PASSAT Variant (33)				
B3	**1.5 D, 1.6 D** 02/77 - 07/80 37 -40 kW		*36-134281*	with standard chassis
B4	**1.3, 1.5, 1.5 D, 1.6, 1.6 D, 1.6 i** 05/73 - 07/80 37 -81 kW	**21-030406** **11-101307** SP		VA: Øa: 50 mm
B6 Sport	**1.3, 1.5, 1.5 D, 1.6, 1.6 D, 1.6 i** 05/73 - 07/80 37 -81 kW	*34-000144*		VA: Quick Repair Service .; Used part return required .
VW PASSAT (32B)				
B1	**1.3, 1.6, 1.6 D, 1.6 TD, 1.8, 1.9, 2.0, 2.1, 2.2** 08/80 - 03/88 40 -100 kW	**12-116768**		VA: Thickness: 37 mm; Øi: 14 mm; with ball bearing
B1	**1.3, 1.6, 1.6 D, 1.6 TD, 1.8, 1.9, 2.0, 2.1, 2.2** 08/80 - 03/88 40 -100 kW	**12-117475**		VA: Thickness: 41 mm; Øi: 14 mm
B2	**1.3, 1.6, 1.6 D, 1.6 TD, 1.8** 04/83 - 03/88 40 -66 kW	**16-031296** **11-101307** SP	**15-069122** **11-101352** SP	VA: Øa: 50 mm
B2	**1.3, 1.6, 1.9, 2.1** 08/80 - 04/83 40 -85 kW	**16-031296** **11-101307** SP		VA: Øa: 50 mm
B2	**1.6, 1.6 TD, 1.8, 2.0, 2.2** 01/85 - 03/88 51 -100 kW	**16-031296** **11-101307** SP	**15-069122** **11-101352** SP	VA: Øa: 50 mm
B2	**1.6** 01/81 - 02/83 63 kW	**16-031296** **11-101307** SP		VA: Øa: 50 mm
B3	**1.3, 1.6, 1.8, 1.9** 08/82 - 03/88 40 -85 kW	*36-134298*	**36-131075**	with standard chassis
B3	**1.3, 1.6, 1.6 D, 1.6 TD, 1.8, 1.9, 2.0, 2.1, 2.2** 08/82 - 03/88 40 -85 kW		**36-131082**	with standard chassis; Heavy Duty Version .
B3	**1.6** 08/87 - 08/87 51 kW	*36-134298*	**36-131075**	with standard chassis
B3	**1.6** 08/84 - 08/87 53 kW	*36-134298*	**36-131075**	with standard chassis
B3	**2.0** 08/82 - 07/84 85 kW	*36-134298*	**36-131075**	with standard chassis
B3	**2.0** 08/84 - 03/88 85 kW		**36-131075**	with standard chassis
B3	**2.1** 01/81 - 07/82 85 kW	**36-130962**		with standard chassis
B3	**2.1** 08/82 - 07/83 85 kW	*36-134397*	**36-131075**	with standard chassis
B3	**1.6 D, 1.6 TD** 08/84 - 03/88 40 -59 kW	**36-134311**	**36-131075**	with standard chassis
B3	**1.6 D** 08/80 - 07/84 40 kW	*36-134397*	**36-131075**	with standard chassis
B4	**1.3, 1.6, 1.9, 2.1** 08/80 - 04/83 40 -85 kW	**21-030406** **11-101307** SP	*19-019932* **11-101352** SP	VA: Øa: 50 mm
B4	**1.3, 1.6, 1.6 D, 1.6 TD, 1.8** 04/83 - 03/88 40 -66 kW	**21-030406** **11-101307** SP	*19-019659* **11-101352** SP	VA: Øa: 50 mm
B4	**1.6, 1.6 TD, 1.8, 2.0, 2.2** 01/85 - 03/88 51 -100 kW	**21-030406** **11-101307** SP	*19-019659* **11-101352** SP	VA: Øa: 50 mm

V

VW				
VW PASSAT (32B)				
B4	**1.6** 01/81 - 02/83 63 kW	**21-030406** **11-101307** SP	*19-019932*	VA: Øa: 50 mm
B6 Sport	**1.3, 1.6, 1.6 D, 1.6 TD, 1.9, 2.1** 08/80 - CH-Nr. 40 -85 kW	**34-030059**		-> CH.Nr.: 32D155757; without off-road suspension VA: Øa: 50 mm
B6 Sport	**1.3, 1.6, 1.6 D, 1.6 TD, 1.8, 2.0, 2.2** 01/85 - 03/88 40 -100 kW	**34-030059**	*24-000307* **11-101352** SP	without off-road suspension VA: Øa: 50 mm
B6 Sport	**1.3, 1.6, 1.6 D, 1.6 TD, 1.8, 2.0, 2.2** CH-Nr. - 03/88 40 -100 kW	**34-030059**	*24-000307* **11-101352** SP	CH.Nr.: 312513031 ->; without off-road suspension VA: Øa: 50 mm
VW PASSAT Saloon (32B)				
B1	**1.6, 1.6 TD, 1.8, 2.0, 2.2** 01/85 - 03/88 51 -85 kW	**12-116768**		VA: Thickness: 37 mm; Øi: 14 mm; with ball bearing
B1	**1.6, 1.6 TD, 1.8, 2.0, 2.2** 01/85 - 03/88 51 -85 kW	**12-117475**		VA: Thickness: 41 mm; Øi: 14 mm
B2	**1.6, 1.6 TD, 1.8, 2.0, 2.2** 01/85 - 03/88 51 -85 kW	**16-031296** **11-101307** SP	**15-069122** **11-101352** SP	VA: Øa: 50 mm
B3	**1.6** 01/85 - 03/88 51 -55 kW	*36-134298*	**36-131075**	with standard chassis
B3	**1.6, 1.6 TD, 1.8, 2.0, 2.2** 08/82 - 03/88 51 -85 kW		**36-131082**	with standard chassis; Heavy Duty Version .
B3	**1.6 TD, 1.8, 2.0, 2.2** 08/84 - 03/88 51 -85 kW	**36-134311**	**36-131075**	with standard chassis
B4	**1.6, 1.6 TD, 1.8, 2.0, 2.2** 01/85 - 03/88 51 -85 kW	**21-030406** **11-101307** SP	*19-019659* **11-101352** SP	VA: Øa: 50 mm
B6 Sport	**1.6, 1.6 TD, 1.8, 2.0, 2.2** 01/85 - 03/88 51 -85 kW	**34-030059**	*24-000307* **11-101352** SP	without off-road suspension VA: Øa: 50 mm
VW PASSAT Variant (32B)				
B1	**1.3, 1.6, 1.6 D, 1.6 TD, 1.8, 1.8 Syncro, 1.9, 2.0, 2.0 Syncro, 2.1, 2.2, 2.2 Syncro** 08/80 - 03/88 40 -100 kW	**12-116768**		VA: Thickness: 37 mm; Øi: 14 mm; with ball bearing
B1	**1.3, 1.6, 1.6 D, 1.6 TD, 1.8, 1.8 Syncro, 1.9, 2.0, 2.0 Syncro, 2.1, 2.2, 2.2 Syncro** 08/80 - 03/88 40 -100 kW	**12-117475**		VA: Thickness: 41 mm; Øi: 14 mm
B2	**1.3, 1.6, 1.6 D, 1.6 TD, 1.8, 1.9, 2.1** 08/80 - 04/83 40 -85 kW	**16-031296** **11-101307** SP		VA: Øa: 50 mm
B2	**1.3, 1.6, 1.6 D, 1.6 TD, 1.8, 1.9, 2.1** 05/83 - 03/88 40 -85 kW	**16-031296** **11-101307** SP	**15-069122** **11-101352** SP	VA: Øa: 50 mm
B2	**1.6, 1.8, 2.0, 2.2** 01/85 - 03/88 51 -100 kW	**16-031296** **11-101307** SP	**15-069122**	VA: Øa: 50 mm
B2	**1.6** 01/81 - 02/83 63 kW	**16-031296** **11-101307** SP		VA: Øa: 50 mm
B3	**1.3, 1.6, 1.8, 1.9** 08/82 - 07/84 40 -85 kW	*36-134298*	**36-131082**	with standard chassis
B3	**1.3, 1.6, 1.6 D, 1.6 TD, 1.8, 1.9, 2.0, 2.1, 2.2** 08/82 - 03/88 40 -100 kW		**36-155088**	with standard chassis; Heavy Duty Version .

V

VW				
VW PASSAT Variant (32B)				
B3	**1.6** 08/84 - 03/88 51 -53 kW	*36-134298*	**36-131082**	with standard chassis
B3	**1.9** 07/82 - 07/83 85 kW	*36-134397*	*36-134281*	with standard chassis
B3	**2.0** 08/83 - 07/84 85 kW	*36-134298*	**36-131082**	with standard chassis
B3	**2.0** 08/84 - 03/88 85 kW		**36-131082**	with standard chassis
B3	**2.1** 01/81 - 07/82 85 kW	**36-130962**	*36-134281*	with standard chassis
B4	**1.3, 1.6, 1.6 D, 1.6 TD, 1.8, 1.9, 2.1** 08/80 - 04/83 40 -85 kW	**21-030406** **11-101307** SP	*19-019932* **11-101352** SP	VA: Øa: 50 mm
B4	**1.3, 1.6, 1.6 D, 1.6 TD, 1.8, 1.9, 2.1** 05/83 - 03/88 40 -85 kW	**21-030406** **11-101307** SP	*19-019659* **11-101352** SP	VA: Øa: 50 mm
B4	**1.6, 1.8, 2.0, 2.2** 01/85 - 03/88 51 -100 kW	**21-030406** **11-101307** SP	*19-019659* **11-101352** SP	VA: Øa: 50 mm
B4	**1.6** 01/81 - 02/83 63 kW	**21-030406** **11-101307** SP	*19-019932*	VA: Øa: 50 mm
B4	**1.8 Syncro, 2.0 Syncro, 2.2 Syncro** 08/85 - 03/88 66 -88 kW	**21-030406** **11-101307** SP		VA: Øa: 50 mm
B6 Sport	**1.3, 1.6, 1.6 D, 1.6 TD, 1.9, 2.1** 08/80 - 07/83 40 -85 kW	**34-030059**	*24-000307* **11-101352** SP	-> CH.Nr.: 32D155757; without off-road suspension VA: Øa: 50 mm
B6 Sport	**1.3, 1.6, 1.6 D, 1.6 TD, 1.8, 2.0, 2.2** 01/83 - 03/88 40 -100 kW	**34-030059**	*24-000307*	CH.Nr.: 312513031 ->; without off-road suspension VA: Øa: 50 mm
VW PASSAT (3A2, 35I)				
B1	**1.6, 1.6 TD, 1.8, 1.8 16V, 1.8 G60 Syncro, 1.8 GL, 1.9 D, 1.9 TD, 2.0, 2.0 Syncro, 2.0 16V** 02/88 - CH-Nr. 50 -118 kW	**12-116775**		-> CH.Nr.: 31-P-026435 VA: Øi: 14 mm; Øa: 126 mm; Material: Rubber/Metal; with ball bearing
B1	**1.6, 1.6 TD, 1.8, 1.8 16V, 1.8 G60 Syncro, 1.8 GL, 1.9 D, 1.9 TD, 2.0 Syncro, 2.0 16V** CH-Nr. - 09/93 50 -118 kW	**12-117659**		CH.Nr.: 31-P-026436 ->; VA: with ball bearing
B1	**1.6, 1.9 TDI, 2.0, 2.0 16V, 2.4, 2.8 VR6** 06/91 - 08/96 66 -128 kW	**12-117659**		VA: with ball bearing
B2	**1.6, 1.8, 1.8 16V, 1.8 GL** 02/88 - 09/93 53 -102 kW	**17-047166** **11-101291** SP	**15-062208** **11-101352** SP	with standard chassis
B2	**1.6, 1.9 TDI, 2.0, 2.0 16V, 2.4** 08/88 - 08/96 66 -125 kW	**17-047166** **11-101291** SP	**15-062208** **11-101352** SP	with standard chassis
B2	**1.6** 10/94 - 08/96 74 kW	**17-105248** **11-101291** SP	**15-105257** **11-101352** SP	with off-road suspension
B2	**1.8 16V, 1.8 GL** 04/88 - 09/93 100 -102 kW	**17-105248** **11-101291** SP	**15-105257** **11-101352** SP	with off-road suspension
B2	**1.6 TD, 1.8, 1.9 D, 1.9 TD, 2.0, 2.0 16V** 04/88 - CH-Nr. 50 -100 kW	**17-047166** **11-101291** SP	**15-062208** **11-101352** SP	-> CH.Nr.: 31-P-026 435; with standard chassis
B2	**1.6 TD, 1.8, 1.9 D, 1.9 TD, 2.0 16V** CH-Nr. - 08/96 50 -100 kW		**15-062208** **11-101352** SP	CH.Nr.: 31-P-026 436 ->; with standard chassis

V

VW

VW PASSAT (3A2, 35I)

B2	**1.6 TD, 1.8, 1.9 D, 1.9 TD, 2.0, 2.0 16V** CH-Nr. - 08/96 50 -100 kW	**17-105248** **11-101291** SP	**15-105257** **11-101352** SP	CH.Nr.: 31-P-026 436 ->; with off-road suspension
B3	**1.6, 1.6 TD, 1.8, 1.8 GL, 1.9 D, 1.9 TD, 2.0, 2.0 16V** 02/88 - 07/93 50 -102 kW	**36-130801**	**36-130788**	with standard chassis
B3	**1.6, 1.6 TD, 1.8, 1.8 16V, 1.8 GL, 1.9 D, 1.9 TD, 1.9 TDI, 2.0, 2.0 16V, 2.8 VR6** 02/88 - 08/96 50 -128 kW		**36-130795**	with standard chassis; Heavy Duty Version .
B3	**1.6, 1.8** 09/93 - 08/96 55 -74 kW	**36-130832**	**36-130788**	with standard chassis
B3	**2.8 VR6** 06/91 - 08/96 128 kW	**36-130856**	**36-130788**	with standard chassis
B3	**1.9 TD, 1.9 TDI, 2.0, 2.0 16V** 10/93 - 08/96 55 -110 kW	**36-130849**	**36-130788**	with standard chassis
B4	**1.6, 1.8, 1.8 16V, 1.8 GL** 02/88 - 09/93 53 -102 kW	**21-031502** **11-101291** SP	**19-019949** **11-101352** SP	with standard chassis VA: for bolted struts only
B4	**1.6, 1.8, 1.8 16V, 1.8 GL** 02/88 - 09/93 53 -102 kW	**22-041234** **11-101291** SP	**19-019949** **11-101352** SP	with standard chassis
B4	**1.6, 1.9 TDI, 2.0, 2.0 16V, 2.4** 08/88 - 08/96 66 -125 kW	**22-045768** **11-101291** SP	**19-019949** **11-101352** SP	with standard chassis
B4	**1.8, 1.9 TD, 2.0** 01/94 - 08/96 55 -85 kW	**22-045768** **11-101291** SP	**19-019949** **11-101352** SP	CH.Nr.: 31-P-026 436 ->; with standard chassis
B4	**1.8 G60 Syncro, 2.0 Syncro** 08/88 - CH-Nr. 81 -118 kW	**21-031502** **11-101291** SP	**19-216973**	-> CH.Nr.: 31-P-026 435; with standard chassis VA: for bolted struts only
B4	**1.8 G60 Syncro, 2.0 Syncro** 08/88 - CH-Nr. 81 -118 kW	**22-041234** **11-101291** SP	**19-216973**	-> CH.Nr.: 31-P-026 435; with standard chassis
B4	**2.8 VR6** 06/91 - 07/93 128 kW	**22-041234** **11-101291** SP	**19-019949** **11-101352** SP	for vehicles with "Basisachse" only; with standard chassis
B4	**2.8 VR6** 06/91 - 07/93 128 kW	**22-045768** **11-101291** SP	**19-019949** **11-101352** SP	for vehicles with "Plusachse" only; with standard chassis
B4	**1.6 TD, 1.8, 1.9 D, 1.9 TD, 2.0, 2.0 16V** 04/88 - 12/93 50 -100 kW	**21-031502** **11-101291** SP	**19-019949** **11-101352** SP	-> CH.Nr.: 31-P-026 435; with standard chassis VA: for bolted struts only
B4	**1.6 TD, 1.8, 1.9 D, 1.9 TD, 2.0, 2.0 16V** 04/88 - 12/93 50 -100 kW	**22-041234** **11-101291** SP	**19-019949** **11-101352** SP	-> CH.Nr.: 31-P-026 435; with standard chassis
B6 Sport	**1.6, 1.8, 1.8 16V, 1.8 GL, 2.0, 2.0 16V, 2.4** 02/88 - 09/93 53 -125 kW	**22-004062** **11-101291** SP	**24-015974** **11-101352** SP	for vehicles with "Basisachse" only; without off-road suspension
B6 Sport	**1.6, 1.8, 1.9 TD, 1.9 TDI, 2.0** 01/94 - 08/96 55 -79 kW	**22-040589** **11-101291** SP	**24-015974** **11-101352** SP	CH.Nr.: 3AR000001 ->; for vehicles with "Plusachse" only; without off-road suspension
B6 Sport	**2.8 VR6** CH-Nr. - CH-Nr. 128 kW	**22-004062** **11-101291** SP	**24-015974** **11-101352** SP	CH.Nr.: 31M320488-> 31M400000; without off-road suspension
B6 Sport	**2.8 VR6** 01/92 - CH-Nr. 128 kW	**22-040589** **11-101291** SP	**24-015974** **11-101352** SP	-> CH.Nr.: 31N000001; for vehicles with "Plusachse" only; without off-road suspension
B6 Sport	**1.6 TD, 1.8, 1.9 D, 1.9 TD, 1.9 TDI** 02/88 - 12/93 50 -66 kW	**22-004062** **11-101291** SP	**24-015974** **11-101352** SP	-> CH.Nr.: 31P400000; for vehicles with "Basisachse" only; without off-road suspension
B6 Sport	**1.9 TDI, 2.0, 2.0 16V** 01/93 - CH-Nr. 81 -110 kW	**22-004062** **11-101291** SP	**24-015974** **11-101352** SP	-> CH.Nr.: 31P026435; for vehicles with "Basisachse" only; without off-road suspension
B6 Sport	**1.9 TDI, 2.0, 2.0 16V** 01/93 - CH-Nr. 81 -110 kW	**22-040589** **11-101291** SP	**24-015974** **11-101352** SP	-> CH.Nr.: 31P026436; for vehicles with "Plusachse" only; without off-road suspension

VW

VW PASSAT (3A2, 35I)

B8	**1.6, 1.8, 1.9 TD, 1.9 TDI, 2.0** 01/94 - 08/96 55 -79 kW	*22-043092* **11-101291** SP	**24-026017** **11-101352** SP	CH.Nr.: 3AR000001 ->; for vehicles with "Plusachse" only; without off-road suspension
B8	**2.8 VR6** CH-Nr. - CH-Nr. 128 kW	**22-043085** **11-101291** SP	**24-026017** **11-101352** SP	CH.Nr.: 31M320488-> 31M400000; without off-road suspension
B8	**2.8 VR6** 01/92 - CH-Nr. 128 kW	*22-043092* **11-101291** SP	**24-026017** **11-101352** SP	-> CH.Nr.: 31N000001; for vehicles with "Plusachse" only; without off-road suspension
B8	**1.6 TD, 1.8, 1.9 D, 1.9 TD, 1.9 TDI** 02/88 - 12/93 50 -66 kW	**22-043085** **11-101291** SP	**24-026017** **11-101352** SP	-> CH.Nr.: 31P400000; for vehicles with "Basisachse" only; without off-road suspension
B8	**1.9 TDI, 2.0, 2.0 16V** 01/93 - CH-Nr. 81 -110 kW	**22-043085** **11-101291** SP	**24-026017** **11-101352** SP	-> CH.Nr.: 31-P-026 436; for vehicles with "Basisachse" only; without off-road suspension
B8	**1.9 TDI, 2.0, 2.0 16V** 01/93 - CH-Nr. 81 -110 kW	*22-043092* **11-101291** SP	**24-026017** **11-101352** SP	-> CH.Nr.: 31P026436; for vehicles with "Plusachse" only; without off-road suspension

VW PASSAT Variant (3A5, 35I)

B1	**1.6, 1.6 TD, 1.8, 1.8 16V, 1.8 G60 Syncro, 1.9 D, 1.9 TD, 2.0, 2.0 Syncro, 2.0 16V** 02/88 - 07/93 50 -125 kW	**12-116775**		-> CH.Nr.: 31-P-026435 VA: Øi: 14 mm; Øa: 126 mm; Material: Rubber/Metal; with ball bearing
B1	**1.6, 1.9 TDI, 2.0, 2.0 16V, 2.8 VR6** 06/91 - 05/97 66 -128 kW	**12-117659**		VA: with ball bearing
B1	**1.6 TD, 1.8, 1.8 G60 Syncro, 1.9 D, 1.9 TD, 2.0, 2.0 Syncro, 2.0 16V** 08/93 - 05/97 50 -118 kW	**12-117659**		CH.Nr.: 31-P-026436 ->; VA: with ball bearing
B2	**1.6** 04/88 - 07/91 53 -55 kW	**17-047166** **11-101291** SP	**15-062208** **11-101352** SP	with standard chassis
B2	**1.6** 07/94 - 12/95 74 kW		**15-062208** **11-101352** SP	with standard chassis
B2	**1.6** 07/94 - 12/95 74 kW	**17-105248** **11-101291** SP	**15-105257** **11-101352** SP	with off-road suspension
B2	**1.6 TD, 1.8, 1.9 D, 1.9 TD, 2.0, 2.0 16V** 04/88 - 07/93 50 -125 kW	**17-047166** **11-101291** SP	**15-062208** **11-101352** SP	-> CH.Nr.: 31-P-026 435; with standard chassis
B2	**1.6 TD, 1.8, 1.9 D, 1.9 TD, 1.9 TDI, 2.0, 2.0 16V** 08/93 - 10/96 50 -100 kW		**15-062208** **11-101352** SP	CH.Nr.: 31-P-026 436 ->; with standard chassis
B2	**1.6 TD, 1.8, 1.9 D, 1.9 TD, 1.9 TDI, 2.0, 2.0 16V** 08/93 - 05/97 50 -110 kW	**17-105248** **11-101291** SP	**15-105257** **11-101352** SP	CH.Nr.: 31-P-026 436 ->; with off-road suspension
B3	**1.6, 1.6 TD, 1.8, 1.8 16V, 1.9 D, 1.9 TD, 2.0, 2.0 16V** 02/88 - 07/93 50 -125 kW	**36-130801**	**36-130795**	-> CH.Nr.: 31-P-026435; with standard chassis
B3	**1.6, 1.6 TD, 1.8, 1.8 16V, 1.9 D, 1.9 TD, 2.0, 2.0 16V, 2.8 VR6** 02/88 - 07/93 50 -128 kW		**36-130870**	-> CH.Nr.: 31-P-026435; with standard chassis; Heavy Duty Version .
B3	**1.6, 1.8** 08/93 - 05/97 55 -74 kW	**36-130832**	**36-130917**	CH.Nr.: 31-P-026 435 ->; with standard chassis
B3	**1.6, 1.8, 1.9 D, 1.9 TD, 1.9 TDI, 2.0, 2.0 16V** 10/93 - 05/97 50 -110 kW	**36-130863**	**36-130924**	with standard chassis
B3	**2.8 VR6** 06/91 - 08/93 128 kW	**36-130856**	**36-130795**	with standard chassis
B3	**2.8 VR6** 10/93 - 05/97 128 kW	**36-130856**	**36-130924**	with standard chassis

V

VW

VW PASSAT Variant (3A5, 35I)

B3	**1.9 D, 1.9 TD, 1.9 TDI, 2.0, 2.0 16V** 10/93 - 05/97 50 -110 kW	**36-130849**	**36-130917**	CH.Nr.: 31-P-026436 ->; with standard chassis
B4	**1.6** 04/88 - 07/91 53 kW	**21-031502** **11-101291** SP	**19-019949** **11-101352** SP	with standard chassis VA: for bolted struts only
B4	**1.6** 04/88 - 07/91 53 kW	**22-041234** **11-101291** SP	**19-019949** **11-101352** SP	with standard chassis
B4	**1.6, 1.8, 1.8 16V** 04/88 - 12/89 55 -102 kW	**21-031502** **11-101291** SP	**19-019949**	with standard chassis VA: for bolted struts only
B4	**1.6, 1.8, 1.8 16V** 04/88 - 12/89 55 -102 kW	**22-041234** **11-101291** SP	**19-019949** **11-101352** SP	with standard chassis
B4	**1.6** 07/94 - 12/95 74 kW	**22-045768** **11-101291** SP	**19-019949** **11-101352** SP	with standard chassis
B4	**1.8 G60 Syncro, 2.0 Syncro** 08/88 - CH-Nr. 85 -118 kW	**22-041234** **11-101291** SP	**19-216973**	-> CH.Nr.: 31-P-026 435; with standard chassis
B4	**1.8 G60 Syncro, 2.0 Syncro** 08/88 - CH-Nr. 85 -118 kW	**21-031502** **11-101291** SP	**19-216973**	-> CH.Nr.: 31-P-026 435; with standard chassis VA: for bolted struts only
B4	**1.8 G60 Syncro, 2.0 Syncro** CH-Nr. - 05/97 85 -118 kW	**22-045768** **11-101291** SP	**19-216973**	CH.Nr.: 31-P-026 436 ->; with standard chassis
B4	**2.8 VR6** 06/91 - 05/97 128 kW	**22-041234** **11-101291** SP	**19-019949**	for vehicles with "Basisachse" only; with standard chassis
B4	**2.8 VR6** 06/91 - 05/97 128 kW	**22-045768** **11-101291** SP	**19-019949** **11-101390** SP	for vehicles with "Plusachse" only; with standard chassis
B4	**1.6 TD, 1.8, 1.9 D, 1.9 TD, 2.0, 2.0 16V** 04/88 - 07/93 50 -125 kW	**21-031502** **11-101291** SP	**19-019949** **11-101352** SP	-> CH.Nr.: 31-P-026 435; with standard chassis VA: for bolted struts only
B4	**1.6 TD, 1.8, 1.9 D, 1.9 TD, 2.0, 2.0 16V** 04/88 - 07/93 50 -125 kW	**22-041234** **11-101291** SP	**19-019949** **11-101352** SP	-> CH.Nr.: 31-P-026 435; with standard chassis
B4	**1.6 TD, 1.8, 1.9 D, 1.9 TD, 1.9 TDI, 2.0, 2.0 16V** 08/93 - 05/97 50 -110 kW	**22-045768** **11-101291** SP	**19-019949** **11-101352** SP	CH.Nr.: 31-P-026 436 ->; with standard chassis
B6 Sport	**1.6, 1.8, 1.8 16V** 04/88 - 09/93 53 -102 kW	**22-004062** **11-101291** SP	**24-015974** **11-101352** SP	for vehicles with "Basisachse" only
B6 Sport	**1.6, 2.8 VR6** 04/88 - 12/93 55 -128 kW	**22-004062** **11-101291** SP	**24-015974** **11-101352** SP	-> CH.Nr.: 31-P-026 435; for vehicles with "Basisachse" only
B6 Sport	**1.6, 1.8, 1.9 TD, 1.9 TDI, 2.0** 08/93 - 10/96 55 -85 kW	**22-040589** **11-101291** SP	**24-015974** **11-101352** SP	CH.Nr.: 31-P-026 436 ->; for vehicles with "Plusachse" only
B6 Sport	**2.0, 2.0 16V** 08/88 - 12/93 85 -125 kW	**22-004062** **11-101291** SP	**24-015974** **11-101352** SP	-> CH.Nr.: 31-P-026 435; for vehicles with "Basisachse" only; without off-road suspension
B6 Sport	**1.6 TD, 1.8, 1.9 D, 1.9 TD** 02/88 - 07/93 50 -66 kW	**22-004062** **11-101291** SP	**24-015974** **11-101352** SP	-> CH.Nr.: 31-P-026 435; for vehicles with "Basisachse" only
B6 Sport	**1.9 TDI, 2.0, 2.0 16V, 2.8 VR6** 01/94 - 05/97 81 -128 kW	**22-040589** **11-101291** SP	**24-015974** **11-101352** SP	CH.Nr.: 31-P-026436 ->; for vehicles with "Plusachse" only; without off-road suspension
B8	**1.6, 1.8, 1.9 D, 1.9 TD, 1.9 TDI, 2.0** 08/93 - 10/96 50 -85 kW	*22-043092* **11-101291** SP	**24-026017** **11-101352** SP	CH.Nr.: 31-P-026 436 ->; for vehicles with "Plusachse" only
B8	**1.6 TD, 1.8, 1.9 D, 1.9 TD** 02/88 - 07/93 50 -66 kW	**22-043085** **11-101291** SP	**24-026017** **11-101352** SP	-> CH.Nr.: 31-P-026 435; for vehicles with "Basisachse" only
B8	**1.9 TDI, 2.0, 2.0 16V, 2.8 VR6** 06/91 - CH-Nr. 81 -128 kW	**22-043085** **11-101291** SP	**24-026017** **11-101352** SP	-> CH.Nr.: 31-P-026 435; for vehicles with "Basisachse" only; without off-road suspension

V

VW				
VW PASSAT Variant (3A5, 35I)				
B8	**1.9 TDI, 2.0, 2.0 16V, 2.8 VR6** 12/93 - 05/97 81 -128 kW	*22-043092* **11-101291** SP	**24-026017** **11-101352** SP	CH.Nr.: 31-P-026436 ->; for vehicles with "Plusachse" only; without off-road suspension
VW PASSAT (3B2)				
B1	**1.6, 1.8, 1.8 Syncro/4motion, 1.8 T, 1.8 T Syncro, 1.9 TDI, 1.9 TDI 4motion, 1.9 TDI Syncro/4motion, 2.0, 2.0 4motion, 2.3 VR5, 2.3 VR5 Syncro/4motion, 2.5 TDI, 2.5 TDI Syncro/4motion, 2.8 Syncro, 2.8 V6, 2.8 V6 4motion, 2.8 V6 Syncro/4motion** 08/96 - 11/00 66 -143 kW	**12-117642**		VA: Material: Rubber/Metal; without ball bearing
B3	**1.6** 10/96 - 11/00 74 kW	**37-131371**	**38-134401**	with standard chassis
B3	**1.6** 10/96 - 11/00 74 kW	**37-131388**		with standard chassis; Heavy Duty Version .
B3	**1.8, 1.8 T, 1.9 TDI, 2.5 TDI** 10/96 - 11/00 66 -110 kW	**37-131302**	**38-131097**	with standard chassis
B3	**1.8, 1.8 T, 1.9 TDI, 2.3 VR5, 2.5 TDI** 10/96 - 11/00 66 -110 kW	**37-131449**		with standard chassis; Heavy Duty Version .
B3	**1.8 Syncro/4motion, 1.9 TDI 4motion, 1.9 TDI Syncro/4motion, 2.5 TDI Syncro/4motion** 10/96 - 11/00 81 -110 kW	**37-131302**	**36-134410**	with standard chassis
B3	**1.8 Syncro/4motion, 1.8 T Syncro, 2.3 VR5 Syncro/4motion, 2.8 Syncro, 2.8 V6 Syncro/4motion** 10/96 - 11/00 92 -142 kW	**37-131449**	**36-131167**	with standard chassis; Heavy Duty Version .
B3	**1.8 T Syncro, 2.3 VR5 Syncro/4motion, 2.8 Syncro** 11/96 - 11/00 110 -132 kW	**37-131395**	**36-134427**	with standard chassis
B3	**2.3 VR5** 10/96 - 11/00 110 kW	**37-131395**	**38-131158**	with standard chassis
B3	**2.8 V6** 08/96 - 11/00 132 -142 kW	**37-131449**		with standard chassis; Heavy Duty Version .
B3	**2.8 V6 Syncro/4motion** 10/96 - 11/00 142 kW	**37-131388**	**36-134427**	with standard chassis
B3	**2.8 Syncro, 2.8 V6** 08/96 - 11/00 132 -143 kW	**37-131388**		with standard chassis
B4	**1.6, 1.8** 10/96 - 11/00 74 -92 kW	**22-031167** **19-029443** **11-149835** SP		-> CH.Nr.: 3B- YE-121 221; with standard chassis; with sports suspension
B4	**1.8 Syncro/4motion, 1.8 T Syncro, 2.3 VR5 Syncro/4motion, 2.8 Syncro, 2.8 V6 Syncro/4motion** 10/96 - CH-Nr. 92 -142 kW	**22-031167**		-> CH.Nr.: 3B-WE-113 561; with standard chassis
B4	**1.8 Syncro/4motion, 1.8 T Syncro, 1.9 TDI Syncro/4motion, 2.3 VR5 Syncro/4motion, 2.8 Syncro, 2.8 V6 Syncro/4motion** 10/96 - CH-Nr. 81 -142 kW	**19-045771**		-> CH.Nr.: 3B-WE-113 561; with sports suspension
B4	**1.8 T, 1.9 TDI, 2.3 VR5, 2.5 TDI, 2.8 Syncro, 2.8 V6** 08/96 - CH-Nr. 66 -143 kW	**22-031167** **19-029443** **11-149835** SP		-> CH.Nr.: 3B_YE-121 221; with standard chassis

V

VW				
VW PASSAT (3B2)				
B4	**1.8 T, 1.9 TDI, 2.3 VR5, 2.5 TDI, 2.8 Syncro, 2.8 V6** 08/96 - CH-Nr. 66 -143 kW	**19-045771**	**19-140049** **11-149835** SP	-> CH.Nr.: 3B_YE-121 221; with sports suspension
B4	**1.8 T, 1.9 TDI, 2.3 VR5, 2.5 TDI, 2.8 Syncro, 2.8 V6** CH-Nr. - 11/00 66 -143 kW	**19-119939**	**19-029443** **11-149835** SP	CH.Nr.: 3B_YE-121 222 ->; with standard chassis; with sports suspension
B4	**1.9 TDI, 2.0** 02/00 - 11/00 74 -88 kW	**19-119939**	**19-029443**	with standard chassis; with sports suspension
B6 Sport	**1.6, 1.8, 1.8 T, 1.9 TDI, 2.3 VR5, 2.5 TDI, 2.8 Syncro, 2.8 V6** 08/96 - 11/00 66 -143 kW	**24-020794**	**24-025324**	-> CH.Nr.: 3B_YE121221; without off-road suspension VA: serie production spring seat must be used
B8	**1.6, 1.8, 1.8 T, 1.9 TDI, 2.3 VR5, 2.5 TDI, 2.8 Syncro, 2.8 V6** 08/96 - 11/00 66 -143 kW	**24-020817**	**24-025331**	-> CH.Nr.: 3B _YE121221; without off-road suspension VA: serie production spring seat must be used
B12 PK	**1.6, 1.8, 1.8 T** 10/96 - 11/00 74 -110 kW	**46-188694**		-> CH.Nr.: 3B_YE121221; Conditions see certificates VA: lowering (expertise): 30 mm; axle load to: 1020 kg HA: lowering (expertise): 30 mm; axle load to: 1010 kg
B12 PK	**1.8, 1.8 T, 1.9 TDI, 2.3 VR5** 10/96 - 11/00 66 -110 kW	**46-188700**		-> CH.Nr.: 3B_YE121221; Conditions see certificates VA: lowering (expertise): 30 mm; axle load to: 1090 kg HA: lowering (expertise): 30 mm; axle load to: 1010 kg
B12 PK	**2.5 TDI** 07/98 - 11/00 110 kW	**46-188717**		-> CH.Nr.: 3B_YE121221; Conditions see certificates VA: lowering (expertise): 30 mm; axle load to: 1190 kg HA: lowering (expertise): 30 mm; axle load to: 1010 kg
B14	**1.6, 1.8, 1.8 T, 1.9 TDI, 2.0, 2.3 VR5, 2.5 TDI, 2.8 Syncro, 2.8 V6** 08/96 - 11/00 66 -143 kW	**47-124806**		Conditions see certificates VA: lowering (expertise): 35-55 mm; axle load to: 1230 kg HA: lowering (expertise): 35-55 mm; axle load to: 1200 kg
B14	**1.8 Syncro/4motion, 1.8 T Syncro, 1.9 TDI 4motion, 1.9 TDI Syncro/4motion, 2.0 4motion, 2.3 VR5 Syncro/4motion, 2.5 TDI Syncro/4motion, 2.8 Syncro, 2.8 V6 4motion, 2.8 V6 Syncro/4motion** 10/96 - 11/00 81 -142 kW	**47-086937**		Conditions see certificates VA: lowering (expertise): 25-45 mm; axle load to: 1260 kg HA: lowering (expertise): 20-40 mm; axle load to: 1200 kg
B16 PSS9	**1.6, 1.8, 1.8 T, 1.9 TDI, 2.0, 2.3 VR5, 2.5 TDI, 2.8 Syncro, 2.8 V6** 08/96 - 11/00 66 -143 kW	**48-088749**		Conditions see certificates VA: lowering (expertise): 35-55 mm; axle load to: 1230 kg HA: lowering (expertise): 35-55 mm; axle load to: 1200 kg
B16 PSS9	**1.8 Syncro/4motion, 1.8 T Syncro, 1.9 TDI 4motion, 1.9 TDI Syncro/4motion, 2.0 4motion, 2.3 VR5 Syncro/4motion, 2.5 TDI Syncro/4motion, 2.8 Syncro, 2.8 V6 4motion, 2.8 V6 Syncro/4motion** 10/96 - 11/00 81 -142 kW	**48-088688**		Conditions see certificates VA: lowering (expertise): 25-45 mm; axle load to: 1260 kg HA: lowering (expertise): 20-40 mm; axle load to: 1200 kg
VW PASSAT Variant (3B5)				
B1	**1.6, 1.8, 1.8 Syncro/4motion, 1.8 T, 1.9 TDI, 1.9 TDI 4motion, 1.9 TDI Syncro/4motion, 2.0, 2.0 4motion, 2.3 VR5, 2.3 VR5 Syncro/4motion, 2.5 TDI, 2.5 TDI Syncro/4motion, 2.8 V6, 2.8 V6 4motion, 2.8 V6 Syncro/4motion** 06/97 - 11/00 66 -142 kW	**12-117642**		VA: Material: Rubber/Metal; without ball bearing
B3	**1.6** 06/97 - 11/00 74 kW	**37-131371**	**38-131097**	with standard chassis
B3	**1.6** 06/97 - 11/00 74 kW	**37-131388**		with standard chassis; Heavy Duty Version .
B3	**1.6, 1.8, 1.8 T, 1.9 TDI, 2.0, 2.3 VR5, 2.5 TDI, 2.8 V6** 06/97 - 11/00 66 -142 kW		**38-131349**	with off-road suspension
B3	**1.8, 1.8 T, 1.9 TDI, 2.5 TDI** 06/97 - 11/00 66 -110 kW	**37-131302**	**38-131158**	with standard chassis

VW				
VW PASSAT Variant (3B5)				
B3	**1.8, 1.8 T, 1.9 TDI, 2.3 VR5, 2.5 TDI, 2.8 V6** 06/97 - 11/00 66 -142 kW	**37-131449**		with standard chassis; Heavy Duty Version .
B3	**1.8 Syncro/4motion, 1.9 TDI 4motion, 1.9 TDI Syncro/4motion, 2.5 TDI Syncro/4motion** 06/97 - 11/00 81 -110 kW	**37-131302**	**36-131167**	with standard chassis
B3	**2.3 VR5** 06/97 - 11/00 110 kW	**37-131395**	**38-131158**	with standard chassis
B3	**2.3 VR5 Syncro/4motion** 10/97 - 11/00 110 kW	**37-131395**	**36-131167**	with standard chassis
B3	**2.8 V6** 06/97 - 11/00 132 -142 kW	**37-131388**	**38-131158**	with standard chassis
B3	**2.8 V6 Syncro/4motion** 06/97 - 11/00 142 kW	**37-131388**	**36-131167**	with standard chassis
B4	**1.6, 1.8** 06/97 - 11/00 74 -92 kW	**22-031167**	**19-029443** **11-149835** SP	-> CH.Nr.: 3B_YE-121 221; with standard chassis; with sports suspension
B4	**1.8 Syncro/4motion, 1.9 TDI Syncro/4motion, 2.3 VR5 Syncro/4motion, 2.8 V6 Syncro/4motion** 06/97 - CH-Nr. 81 -142 kW	**22-031167**		-> CH.Nr.: 3B-WE-113 561; with standard chassis
B4	**1.8 T, 1.9 TDI, 2.3 VR5, 2.5 TDI, 2.8 V6** 06/97 - CH-Nr. 66 -142 kW	**22-031167**	**19-029443** **11-149835** SP	-> CH.Nr.: 3B-YE-121 221; with standard chassis
B4	**1.8 T, 1.9 TDI, 2.3 VR5, 2.5 TDI, 2.8 V6** 06/97 - CH-Nr. 66 -142 kW	**19-045771**	**19-029443** **11-149835** SP	-> CH.Nr.: 3B-YE-121 221; with sports suspension
B4	**2.3 VR5 Syncro/4motion** 10/97 - CH-Nr. 110 kW	**19-045771**		-> CH.Nr.: 3B-WE-113 561; with sports suspension
B4	**1.9 TDI, 2.3 VR5, 2.5 TDI, 2.8 V6** CH-Nr. - 11/00 66 -142 kW	**19-119939**	**19-029443** **11-149835** SP	CH.Nr.: 3B- YE-121 222 ->; with standard chassis; with sports suspension
B4	**1.9 TDI, 2.0** 02/00 - 11/00 74 -88 kW	**19-119939**	**19-029443** **11-149835** SP	with standard chassis; with sports suspension
B4	**1.9 TDI Syncro/4motion, 2.8 V6 Syncro/4motion** 06/97 - CH-Nr. 81 -142 kW	**19-045771**		-> CH.Nr.: 3B-WE-113 561; with sports suspension
B6 Sport	**1.6, 1.8, 1.8 T, 1.9 TDI, 2.3 VR5, 2.5 TDI, 2.8 V6** 06/97 - 11/00 66 -142 kW	**24-020794**	**24-025324**	-> CH.Nr.: 3B_YE121221; without off-road suspension VA: serie production spring seat must be used
B6 Sport	**1.8 Syncro/4motion, 1.9 TDI 4motion, 1.9 TDI Syncro/4motion, 2.0 4motion, 2.3 VR5 Syncro/4motion, 2.5 TDI Syncro/4motion, 2.8 V6 4motion, 2.8 V6 Syncro/4motion** 12/99 - 11/00 81 -142 kW	**24-065122**	**24-065092**	CH.Nr.: 3BYE121222 ->; without off-road suspension
B8	**1.6, 1.8, 1.8 T, 1.9 TDI, 2.3 VR5, 2.5 TDI, 2.8 V6** 06/97 - 11/00 66 -142 kW	**24-020817**	**24-025331**	-> CH.Nr.: 3B_YE121221; without off-road suspension VA: serie production spring seat must be used
B8	**1.8 Syncro/4motion, 1.9 TDI 4motion, 1.9 TDI Syncro/4motion, 2.0 4motion, 2.3 VR5 Syncro/4motion, 2.5 TDI Syncro/4motion, 2.8 V6 4motion, 2.8 V6 Syncro/4motion** 12/99 - 11/00 81 -142 kW	**24-065139**	**24-065115**	CH.Nr.: 3BYE121222 ->; without off-road suspension

V

VW

VW PASSAT Variant (3B5)

B12 PK	**1.6, 1.8, 1.8 T** 06/97 - CH-Nr. 74 -110 kW	**46-183958**		-> CH.Nr.: 200011; -> CH.Nr.: 3B-YE121222; serie production spring seat must be used; without off-road suspension; Conditions see certificates VA: lowering (expertise): 30 mm; axle load to: 1020 kg HA: without ride height adjustment; lowering (expertise): 30 mm; axle load to: 1080 kg
B12 PK	**1.8, 1.8 T, 1.9 TDI, 2.3 VR5** 06/97 - 11/00 66 -110 kW	**46-183965**		-> CH.Nr.: 3B-YE121222; serie production spring seat must be used; without off-road suspension; Conditions see certificates VA: lowering (expertise): 30 mm; axle load to: 1090 kg HA: without ride height adjustment; lowering (expertise): 30 mm; axle load to: 1080 kg
B12 PK	**1.8 Syncro/4motion, 1.9 TDI 4motion, 1.9 TDI Syncro/4motion, 2.0 4motion, 2.3 VR5 Syncro/4motion** 12/99 - 11/00 81 -110 kW	**46-183972**		CH.Nr.: 3B-YE121222 ->; without off-road suspension; Conditions see certificates VA: lowering (expertise): 30 mm; axle load to: 1090 kg HA: without ride height adjustment; lowering (expertise): 30 mm; axle load to: 1190 kg
B12 PK	**2.8 V6 4motion, 2.8 V6 Syncro/4motion** 12/99 - 11/00 140 -142 kW	**46-183989**		CH.Nr.: 3B-YE121222 ->; without off-road suspension; Conditions see certificates VA: lowering (expertise): 30 mm; axle load to: 1140 kg HA: without ride height adjustment; lowering (expertise): 30 mm; axle load to: 1190 kg
B12 PK	**2.5 TDI** 07/98 - 11/00 110 kW	**46-183996**		-> CH.Nr.: 3B-YE121222; serie production spring seat must be used; without off-road suspension; Conditions see certificates VA: lowering (expertise): 30 mm; axle load to: 1190 kg HA: without ride height adjustment; lowering (expertise): 30 mm; axle load to: 1080 kg
B12 PK	**2.5 TDI Syncro/4motion** 12/99 - 11/00 110 kW	**46-183941**		CH.Nr.: 3B-YE121222 ->; without off-road suspension; Conditions see certificates VA: lowering (expertise): 30 mm; axle load to: 1200 kg HA: without ride height adjustment; lowering (expertise): 30 mm; axle load to: 1190 kg
B14	**1.6, 1.8, 1.8 T, 1.9 TDI, 2.0, 2.3 VR5, 2.5 TDI, 2.8 V6** 06/97 - 11/00 66 -142 kW	**47-124806**		Conditions see certificates VA: lowering (expertise): 35-55 mm; axle load to: 1230 kg HA: lowering (expertise): 35-55 mm; axle load to: 1200 kg
B14	**1.8 Syncro/4motion, 1.9 TDI 4motion, 1.9 TDI Syncro/4motion, 2.0 4motion, 2.3 VR5 Syncro/4motion, 2.5 TDI Syncro/4motion, 2.8 V6 4motion, 2.8 V6 Syncro/4motion** 06/97 - 11/00 81 -142 kW	**47-086937**		Conditions see certificates VA: lowering (expertise): 20-45 mm; axle load to: 1260 kg HA: lowering (expertise): 20-40 mm; axle load to: 1200 kg
B16 PSS9	**1.6, 1.8, 1.8 T, 1.9 TDI, 2.0, 2.3 VR5, 2.5 TDI, 2.8 V6** 06/97 - 11/00 66 -142 kW	**48-088749**		with standard chassis; Conditions see certificates VA: lowering (expertise): 35-55 mm; axle load to: 1230 kg HA: lowering (expertise): 35-55 mm; axle load to: 1200 kg
B16 PSS9	**1.8 Syncro/4motion, 1.9 TDI 4motion, 1.9 TDI Syncro/4motion, 2.0 4motion, 2.3 VR5 Syncro/4motion, 2.5 TDI Syncro/4motion, 2.8 V6 4motion, 2.8 V6 Syncro/4motion** 06/97 - 11/00 81 -142 kW	**48-088688**		Conditions see certificates VA: lowering (expertise): 20-45 mm; axle load to: 1260 kg HA: lowering (expertise): 20-40 mm; axle load to: 1200 kg

VW PASSAT (3B3)

B1	**1.6, 1.8, 1.8 4motion, 1.8 T, 1.8 T 20V, 1.9 TDI, 1.9 TDI 4motion, 2.0, 2.0 4motion, 2.0 TDI, 2.3 V5, 2.3 V5 4motion, 2.5 TDI, 2.5 TDI 4motion, 2.8 4motion, 4.0 W8 4motion** 11/00 - 05/05 74 -202 kW	**12-117642**		VA: Material: Rubber/Metal; without ball bearing
B3	**1.6** 11/00 - 05/05 75 kW	**37-134440**	**38-134401**	with standard chassis
B3	**1.6** 11/00 - 05/05 75 kW	**37-131388**		with standard chassis; Heavy Duty Version .
B3	**1.8 T 20V** 11/00 - 05/05 110 kW	**37-131302**	**38-134401**	with standard chassis; manual transmission

V

VW				
VW PASSAT (3B3)				
B3	**1.8 T 20V** 11/00 - 05/05 110 kW	**37-131371**	**38-134401**	with standard chassis; automatic transmission
B3	**1.8 T** 02/01 - 05/05 125 kW	**37-131371**	**38-134401**	with standard chassis
B3	**1.8 4motion, 2.0 4motion** 11/00 - 05/05 85 -125 kW	**37-131302**	**38-131097**	with standard chassis
B3	**1.8 4motion, 1.8 T, 1.8 T 20V, 2.0, 2.0 4motion, 2.3 V5, 2.3 V5 4motion** 11/00 - 05/05 85 -125 kW	**37-131449**		with standard chassis; Heavy Duty Version .
B3	**2.0** 11/00 - 05/05 85 -96 kW	**37-131302**	**38-134401**	with standard chassis
B3	**2.3 V5** 11/00 - 05/05 125 kW	**37-131371**	**38-134401**	with standard chassis; manual transmission
B3	**2.3 V5** 11/00 - 05/05 125 kW	**37-131388**	**38-134401**	with standard chassis; automatic transmission
B3	**2.3 V5 4motion** 11/00 - 05/05 125 kW	**37-131388**	**38-131097**	with standard chassis
B3	**2.8 4motion** 11/00 - 05/05 142 kW	**37-131388**	**38-131097**	with standard chassis; manual transmission
B3	**2.8 4motion** 11/00 - 05/05 142 kW	**37-131449**	**38-131097**	with standard chassis; automatic transmission
B3	**2.8 4motion** 11/00 - 05/05 142 kW	**37-131449**		with standard chassis; Heavy Duty Version .
B3	**1.9 TDI** 11/00 - 05/05 74 -96 kW	**37-131371**	**38-134401**	with standard chassis; manual transmission
B3	**1.9 TDI** 11/00 - 05/05 74 -96 kW	**37-131388**	**38-134401**	with standard chassis; automatic transmission
B3	**1.9 TDI** 11/00 - 05/05 74 -96 kW	**37-131449**		with standard chassis; Heavy Duty Version .
B3	**1.9 TDI 4motion** 11/00 - 05/05 96 kW	**37-131371**	**38-131097**	with standard chassis
B3	**1.9 TDI 4motion** 11/00 - 05/05 96 kW	**37-131449**		with standard chassis; Heavy Duty Version .
B3	**2.5 TDI, 2.5 TDI 4motion** 11/00 - 05/05 110 -132 kW	**37-131449**	**38-134401**	with standard chassis
B4	**1.6, 1.8, 2.0** CH-Nr. - 05/05 75 -92 kW	**19-119922**	**19-029443** **11-149835** SP	CH.Nr.: 3B_YE121 222 ->; with standard chassis
B4	**1.6, 1.8, 1.8 T, 1.8 T 20V, 1.9 TDI, 2.0, 2.0 TDI, 2.3 V5, 2.5 TDI** 12/00 - 05/05 74 -125 kW	**19-119939**	**19-140049** **11-149835** SP	CH.Nr.: 3B_YE121 222 ->; with sports suspension
B4	**1.8 T, 1.8 T 20V, 1.9 TDI, 2.0, 2.0 TDI, 2.3 V5, 2.5 TDI** 12/00 - 05/05 74 -125 kW	**19-119939**	**19-029443** **11-149835** SP	CH.Nr.: 3B_YE121 222 ->; with standard chassis
B4	**1.8 4motion, 1.9 TDI 4motion, 2.0 4motion, 2.3 V5 4motion, 2.5 TDI 4motion, 2.8 4motion** 11/00 - 05/05 85 -142 kW	**19-119939**		with sports suspension; with standard chassis
B6 Sport	**1.6, 1.8, 1.8 T, 1.8 T 20V, 1.9 TDI, 2.0, 2.0 TDI, 2.3 V5, 2.5 TDI** 12/00 - 05/05 74 -125 kW	**24-065122**	**24-065429**	CH.Nr.: 3B_YE121 222 ->; without off-road suspension

V

VW				
VW PASSAT (3B3)				
B6 Sport	**1.8 4motion, 1.9 TDI 4motion, 2.0 4motion, 2.3 V5 4motion, 2.5 TDI 4motion, 2.8 4motion, 4.0 W8 4motion** 11/00 - 05/05 85 -202 kW	**24-065122** HA	**24-065092** VA	without off-road suspension
B8	**1.6, 1.8, 1.8 T, 1.8 T 20V, 1.9 TDI, 2.0, 2.0 TDI, 2.3 V5, 2.5 TDI** 12/00 - 05/05 74 -125 kW	**24-065139** HA	**24-065436** VA	CH.Nr.: 3B_YE121 222 ->; without off-road suspension
B8	**1.8 4motion, 1.9 TDI 4motion, 2.0 4motion, 2.3 V5 4motion, 2.5 TDI 4motion, 2.8 4motion, 4.0 W8 4motion** 11/00 - 05/05 85 -202 kW	**24-065139** HA	**24-065115** VA	without off-road suspension
B12 PK	**1.6, 1.8, 1.8 T, 1.8 T 20V, 2.0** 12/00 - 05/05 75 -125 kW	**46-000439**		CH.Nr.: 3B-YE121 222 ->; without off-road suspension; Conditions see certificates VA: lowering (expertise): 30 mm; axle load to: 1070 kg HA: without ride height adjustment; lowering (expertise): 30 mm; axle load to: 1070 kg
B12 PK	**1.8, 1.8 T, 1.8 T 20V, 1.9 TDI, 2.0 TDI, 2.3 V5** 12/00 - 05/05 74 -125 kW	**46-000446**		CH.Nr.: 3B-YE121 222 ->; without off-road suspension; Conditions see certificates VA: lowering (expertise): 30 mm; axle load to: 1175 kg HA: without ride height adjustment; lowering (expertise): 30 mm; axle load to: 1070 kg
B12 PK	**2.3 V5, 2.5 TDI** 12/00 - 05/05 110 -125 kW	**46-000453**		CH.Nr.: 3B-YE121 222 ->; without off-road suspension; Conditions see certificates VA: lowering (expertise): 30 mm; axle load to: 1250 kg HA: without ride height adjustment; lowering (expertise): 30 mm; axle load to: 1070 kg
B14	**1.6, 1.8, 1.8 T, 1.8 T 20V, 1.9 TDI, 2.0, 2.0 TDI, 2.3 V5, 2.5 TDI** 11/00 - 05/05 74 -125 kW	**47-124806**		Conditions see certificates VA: lowering (expertise): 35-55 mm; axle load to: 1230 kg HA: lowering (expertise): 35-55 mm; axle load to: 1200 kg
B14	**1.8 4motion, 1.9 TDI 4motion, 2.0 4motion, 2.3 V5 4motion, 2.5 TDI 4motion, 2.8 4motion, 4.0 W8 4motion** 11/00 - 05/05 85 -202 kW	**47-086937**		without off-road suspension; Conditions see certificates VA: lowering (expertise): 20-45 mm; axle load to: 1260 kg HA: lowering (expertise): 20-40 mm; axle load to: 1200 kg
B16 PSS9	**1.6, 1.8, 1.8 T, 1.8 T 20V, 1.9 TDI, 2.0, 2.0 TDI, 2.3 V5, 2.5 TDI** 11/00 - 05/05 74 -125 kW	**48-088749**		without off-road suspension; Conditions see certificates VA: lowering (expertise): 35-55 mm; axle load to: 1230 kg HA: lowering (expertise): 35-55 mm; axle load to: 1200 kg
B16 PSS9	**1.8 4motion, 1.9 TDI 4motion, 2.0 4motion, 2.3 V5 4motion, 2.5 TDI 4motion, 2.8 4motion, 4.0 W8 4motion** 11/00 - 05/05 85 -202 kW	**48-088688**		without off-road suspension; Conditions see certificates VA: lowering (expertise): 25-45 mm; axle load to: 1260 kg HA: lowering (expertise): 20-40 mm; axle load to: 1200 kg
VW PASSAT Variant (3B6)				
B1	**1.6, 1.8 4motion, 1.8 T, 1.8 T 20V, 1.9 TDI, 1.9 TDI 4motion, 2.0, 2.0 4motion, 2.0 TDI, 2.3 VR5, 2.3 VR5 4motion, 2.5 TDI, 2.5 TDI 4motion, 2.8 4motion, 4.0 W8 4motion** 11/00 - 08/05 74 -202 kW	**12-117642**		VA: Material: Rubber/Metal; without ball bearing
B3	**1.6** 11/00 - 05/05 75 kW	**37-134440**	**38-131097**	with standard chassis
B3	**1.6** 11/00 - 05/05 75 kW	**37-131388**		with standard chassis; Heavy Duty Version .
B3	**1.8 T, 1.8 T 20V** 11/00 - 08/05 110 -125 kW	**37-131302**	**38-131097**	with standard chassis; manual transmission
B3	**1.8 T, 1.8 T 20V** 11/00 - 08/05 110 -125 kW	**37-131371**	**38-131097**	with standard chassis; automatic transmission
B3	**1.8 T, 1.8 T 20V** 11/00 - 08/05 110 -125 kW	**37-131449**		with standard chassis; Heavy Duty Version .

V

VW				
VW PASSAT Variant (3B6)				
B3	**1.8 4motion** 03/01 - 05/05 125 kW	**37-131302**	**38-131349**	with standard chassis
B3	**1.8 4motion, 2.0 4motion** 11/00 - 05/05 85 -125 kW	**37-131449**		with standard chassis; Heavy Duty Version .
B3	**2.0, 2.0 4motion** 11/00 - 05/05 85 -96 kW	**37-131302**		with standard chassis
B3	**2.0** 11/00 - 05/05 85 -96 kW	**37-131449**		with standard chassis; Heavy Duty Version .
B3	**2.3 VR5** 11/00 - 05/05 125 kW	**37-131371**	**38-131097**	with standard chassis; manual transmission
B3	**2.3 VR5** 11/00 - 05/05 125 kW	**37-131388**	**38-131097**	with standard chassis; automatic transmission
B3	**2.3 VR5** 11/00 - 05/05 125 kW	**37-131449**		with standard chassis; Heavy Duty Version .
B3	**2.3 VR5 4motion** 11/00 - 05/05 125 kW	**37-131388**		with standard chassis
B3	**2.3 VR5 4motion** 11/00 - 05/05 125 kW	**37-131449**		with standard chassis; Heavy Duty Version .
B3	**2.8 4motion** 11/00 - 05/05 142 kW	**37-131388**		with standard chassis; manual transmission
B3	**2.8 4motion** 11/00 - 05/05 142 kW	**37-131449**		with standard chassis; automatic transmission
B3	**2.8 4motion** 11/00 - 05/05 142 kW	**37-131449**		with standard chassis; Heavy Duty Version .; manual transmission
B3	**1.9 TDI** 11/00 - 05/05 96 kW	**37-131371**	**38-134401**	with standard chassis; manual transmission; Not for 6 speed manual transmission
B3	**1.9 TDI** 11/00 - 05/05 96 kW	**37-131388**	**38-131097**	with standard chassis; automatic transmission
B3	**1.9 TDI** 11/00 - 05/05 96 kW	**37-131449**		with standard chassis; Heavy Duty Version .; automatic transmission
B3	**1.9 TDI** 11/00 - 05/05 96 kW	**37-131449**		with standard chassis; Heavy Duty Version .; manual transmission; Not for 6 speed manual transmission
B3	**2.5 TDI** 11/00 - 05/05 110 kW	**37-131449**	**38-134401**	with standard chassis
B3	**2.5 TDI 4motion** 11/00 - 05/05 110 kW	**37-131449**		with standard chassis
B4	**1.6, 2.0** CH-Nr. - 05/05 75 -85 kW	**19-119922**	**19-029443** **11-149835** SP	CH.Nr.: 3B_YE121 222 ->; with standard chassis
B4	**1.6, 1.8 T, 1.8 T 20V, 1.9 TDI, 2.0, 2.0 TDI, 2.3 VR5, 2.5 TDI** 12/00 - 08/05 74 -125 kW	**19-119939**	**19-140049** **11-149835** SP	CH.Nr.: 3B_YE121 222 ->; with sports suspension
B4	**1.8 T, 1.8 T 20V, 1.9 TDI, 2.0, 2.0 TDI, 2.3 VR5, 2.5 TDI** 12/00 - 08/05 74 -125 kW	**19-119939**	**19-029443** **11-149835** SP	CH.Nr.: 3B_YE121 222 ->; with standard chassis
B4	**1.8 4motion, 1.9 TDI 4motion, 2.0 4motion, 2.3 VR5 4motion, 2.5 TDI 4motion, 2.8 4motion** 11/00 - 05/05 85 -142 kW	**19-119939**		with sports suspension; with standard chassis

V

VW

VW PASSAT Variant (3B6)

B6 Sport	**1.6, 1.8 T, 1.8 T 20V, 1.9 TDI, 2.0, 2.0 TDI, 2.3 VR5, 2.5 TDI** 12/00 - 08/05 74 -125 kW	**24-065122** HA	**24-065443** VO	CH.Nr.: 3B_YE121 222 ->; without off-road suspension
B6 Sport	**1.8 4motion, 1.9 TDI 4motion, 2.0 4motion, 2.3 VR5 4motion, 2.5 TDI 4motion, 2.8 4motion, 4.0 W8 4motion** 11/00 - 05/05 85 -202 kW	**24-065122** HA	**24-065092** VO	without off-road suspension
B6 Sport	**1.8 4motion, 1.9 TDI 4motion, 2.0 4motion, 2.3 VR5 4motion, 2.5 TDI 4motion, 2.8 4motion, 4.0 W8 4motion** 11/00 - 05/05 85 -202 kW	*24-069533* HA	*24-069540* VO	without off-road suspension; charakteristic: W8
B8	**1.6, 1.8 T, 1.8 T 20V, 1.9 TDI, 2.0, 2.0 TDI, 2.3 VR5, 2.5 TDI** 12/00 - 08/05 74 -125 kW	**24-065139** HA	**24-065450** VO	CH.Nr.: 3B_YE121 222 ->; without off-road suspension
B8	**1.8 4motion, 1.9 TDI 4motion, 2.0 4motion, 2.3 VR5 4motion, 2.5 TDI 4motion, 2.8 4motion, 4.0 W8 4motion** 11/00 - 05/05 85 -202 kW	**24-065139** HA	**24-065115** VO	with sports suspension
B12 PK	**1.6, 1.8 T, 1.8 T 20V, 2.0** 11/00 - 08/05 75 -125 kW	**46-000491**		Conditions see certificates VA: lowering (expertise): 30 mm; axle load to: 1070 kg HA: without ride height adjustment; lowering (expertise): 30 mm; axle load to: 1200 kg
B12 PK	**1.8 T, 1.8 T 20V, 1.9 TDI, 2.0 TDI, 2.3 VR5** 11/00 - 08/05 74 -125 kW	**46-000507**		Conditions see certificates VA: lowering (expertise): 30 mm; axle load to: 1175 kg HA: without ride height adjustment; lowering (expertise): 30 mm; axle load to: 1200 kg
B12 PK	**2.3 VR5, 2.5 TDI** 11/00 - 05/05 110 -125 kW	**46-000514**		Conditions see certificates VA: lowering (expertise): 30 mm; axle load to: 1250 kg HA: without ride height adjustment; lowering (expertise): 30 mm; axle load to: 1200 kg
B12 PK	**2.8 4motion** 11/00 - 05/05 142 kW	**46-183989**		Conditions see certificates VA: lowering (expertise): 30 mm; axle load to: 1140 kg HA: without ride height adjustment; lowering (expertise): 30 mm; axle load to: 1190 kg
B12 PK	**1.9 TDI 4motion, 2.0 4motion, 2.3 VR5 4motion** 11/00 - 05/05 85 -125 kW	**46-183972**		Conditions see certificates VA: lowering (expertise): 30 mm; axle load to: 1090 kg HA: without ride height adjustment; lowering (expertise): 30 mm; axle load to: 1190 kg
B12 PK	**2.5 TDI 4motion** 11/00 - 05/05 110 -132 kW	**46-183941**		Conditions see certificates VA: lowering (expertise): 30 mm; axle load to: 1200 kg HA: without ride height adjustment; lowering (expertise): 30 mm; axle load to: 1190 kg
B14	**1.6, 1.8 T, 1.8 T 20V, 1.9 TDI, 2.0, 2.0 TDI, 2.3 VR5, 2.5 TDI** 11/00 - 08/05 74 -125 kW	**47-124806**		Conditions see certificates VA: lowering (expertise): 35-55 mm; axle load to: 1230 kg HA: lowering (expertise): 35-55 mm; axle load to: 1200 kg
B14	**1.8 4motion, 1.9 TDI 4motion, 2.0 4motion, 2.3 VR5 4motion, 2.5 TDI 4motion, 2.8 4motion, 4.0 W8 4motion** 11/00 - 05/05 85 -202 kW	**47-086937**		without off-road suspension; Conditions see certificates VA: lowering (expertise): 25-45 mm; axle load to: 1260 kg HA: lowering (expertise): 20-40 mm; axle load to: 1200 kg
B16 PSS9	**1.6, 1.8 T, 1.8 T 20V, 1.9 TDI, 2.0, 2.0 TDI, 2.3 VR5, 2.5 TDI** 11/00 - 08/05 74 -125 kW	**48-088749**		without off-road suspension; Conditions see certificates VA: lowering (expertise): 35-55 mm; axle load to: 1230 kg HA: lowering (expertise): 35-55 mm; axle load to: 1200 kg
B16 PSS9	**1.8 4motion, 1.9 TDI 4motion, 2.0 4motion, 2.3 VR5 4motion, 2.5 TDI 4motion, 2.8 4motion, 4.0 W8 4motion** 11/00 - 05/05 85 -202 kW	**48-088688**		without off-road suspension; Conditions see certificates VA: lowering (expertise): 25-45 mm; axle load to: 1260 kg HA: lowering (expertise): 20-40 mm; axle load to: 1200 kg

VW			
VW PASSAT (3C2)			
B1 **1.4 TSI, 1.4 TSI EcoFuel, 1.6, 1.6 FSI, 1.6 TDI, 1.8 TSI, 1.9 TDI, 2.0 BlueTDI, 2.0 FSI, 2.0 FSI 4motion, 2.0 TDI, 2.0 TDI 4motion, 2.0 TDI 16V, 2.0 TDI 16V 4motion, 2.0 TDI 4motion, 2.0 TFSI, 3.2 FSI 4motion, 3.6 FSI 4motion, 3.6 R36 4motion** 04/07 - 75 -220 kW	**12-224074**	**12-224081**	VA: with ball bearing HA: without ball bearing
B3 **1.4 TSI, 1.4 TSI EcoFuel, 1.6, 1.6 FSI, 1.6 TDI** 03/05 - 75 -110 kW	**36-199815**	**36-199846**	with standard chassis
B3 **1.8 TSI, 2.0 FSI** 03/05 - 110 -118 kW	**36-199839**	**36-199846**	with standard chassis
B3 **2.0 FSI 4motion** 09/05 - 110 kW	**36-199563**	**36-199662**	with standard chassis
B3 **2.0 FSI, 2.0 TFSI** 07/05 - 125 -147 kW	**36-199563**	**36-199846**	with standard chassis
B3 **1.9 TDI, 2.0 BlueTDI, 2.0 TDI, 2.0 TDI 16V** 03/05 - 77 -125 kW	**36-199556**	**36-199846**	with standard chassis
B3 **2.0 TDI 4motion, 2.0 TDI 16V 4motion, 2.0 TDI 4motion** 03/05 - 103 -125 kW	**36-199556**	**36-199662**	with standard chassis
B4 **1.4 TSI, 1.4 TSI EcoFuel, 1.6, 1.6 FSI, 1.6 TDI, 1.8 TSI, 1.9 TDI, 2.0 BlueTDI, 2.0 FSI, 2.0 FSI 4motion, 2.0 TDI, 2.0 TDI 4motion, 2.0 TDI 16V, 2.0 TDI 16V 4motion, 2.0 TDI 4motion, 2.0 TFSI, 3.2 FSI 4motion, 3.6 FSI 4motion, 3.6 R36 4motion** 04/07 - 75 -220 kW	**22-151056**	**19-151069**	with standard chassis VA: Øa: 55 mm
B4 **1.4 TSI, 1.4 TSI EcoFuel, 1.6, 1.6 FSI, 1.6 TDI, 1.8 TSI, 1.9 TDI, 2.0 BlueTDI, 2.0 FSI, 2.0 FSI 4motion, 2.0 TDI, 2.0 TDI 4motion, 2.0 TDI 16V, 2.0 TDI 16V 4motion, 2.0 TDI 4motion, 2.0 TFSI, 3.2 FSI 4motion, 3.6 FSI 4motion, 3.6 R36 4motion** 04/07 - 75 -220 kW	**22-151070**	**19-151083**	with sports suspension VA: Øa: 55 mm
B6 Sport **1.4 TSI, 1.4 TSI EcoFuel, 1.6, 1.6 FSI, 1.6 TDI, 1.8 TSI, 1.9 TDI, 2.0 BlueTDI, 2.0 FSI, 2.0 FSI 4motion, 2.0 TDI, 2.0 TDI 4motion, 2.0 TDI 16V, 2.0 TDI 16V 4motion, 2.0 TDI 4motion, 2.0 TFSI, 3.2 FSI 4motion, 3.6 FSI 4motion, 3.6 R36 4motion** 04/07 - 75 -220 kW	**35-122074**	**24-172936**	VA: Øa: 55 mm
B8 **1.4 TSI, 1.4 TSI EcoFuel, 1.6, 1.6 FSI, 1.6 TDI, 1.8 TSI, 1.9 TDI, 2.0 BlueTDI, 2.0 FSI, 2.0 FSI 4motion, 2.0 TDI, 2.0 TDI 4motion, 2.0 TDI 16V, 2.0 TDI 16V 4motion, 2.0 TDI 4motion, 2.0 TFSI, 3.2 FSI 4motion, 3.6 FSI 4motion, 3.6 R36 4motion** 04/07 - 75 -220 kW	**35-122081**	**24-178006**	VA: Øa: 55 mm
B12 PK **1.4 TSI, 1.8 TSI, 1.9 TDI, 2.0 FSI, 2.0 TDI, 2.0 TDI 16V, 2.0 TFSI** 07/05 - 77 -147 kW	**46-184412**		outside diameter strut 55 mm; without electronic suspension control; Conditions see certificates VA: lowering (expertise): 30 mm; axle load to: 1180 kg HA: without ride height adjustment; lowering (expertise): 30 mm; axle load to: 1130 kg

V

VW			
VW PASSAT (3C2)			
B12 PK **1.6, 1.6 FSI, 2.0 FSI** 03/05 - 75 -125 kW	**46-184405**		outside diameter strut 55 mm; without electronic suspension control; Conditions see certificates VA: lowering (expertise): 30 mm; axle load to: 1040 kg HA: without ride height adjustment; lowering (expertise): 30 mm; axle load to: 1130 kg
B12 PK **2.0 FSI 4motion, 2.0 TDI 16V 4motion, 2.0 TDI 4motion, 3.6 FSI 4motion** 03/05 - 103 -206 kW	**46-184443**		outside diameter strut 55 mm; without electronic suspension control; Conditions see certificates VA: lowering (expertise): 30 mm; axle load to: 1180 kg HA: without ride height adjustment; lowering (expertise): 30 mm; axle load to: 1230 kg
B14 **1.4 TSI, 1.4 TSI EcoFuel, 1.6, 1.6 FSI, 1.6 TDI, 1.8 TSI, 1.9 TDI, 2.0 BlueTDI, 2.0 FSI, 2.0 FSI 4motion, 2.0 TDI, 2.0 TDI 4motion, 2.0 TDI 16V, 2.0 TDI 16V 4motion, 2.0 TDI 4motion, 2.0 TFSI, 3.2 FSI 4motion, 3.6 FSI 4motion, 3.6 R36 4motion** 04/07 - 75 -220 kW	**47-127708**		outside diameter strut 55 mm; Conditions see certificates VA: lowering (expertise): 30-50 mm; axle load to: 1210 kg HA: lowering (expertise): 30-50 mm; axle load to: 1250 kg
B16 PSS10 **1.4 TSI, 1.4 TSI EcoFuel, 1.6, 1.6 FSI, 1.6 TDI, 1.8 TSI, 1.9 TDI, 2.0 BlueTDI, 2.0 FSI, 2.0 FSI 4motion, 2.0 TDI, 2.0 TDI 4motion, 2.0 TDI 16V, 2.0 TDI 16V 4motion, 2.0 TDI 4motion, 2.0 TFSI, 3.2 FSI 4motion, 3.6 FSI 4motion, 3.6 R36 4motion** 04/07 - 75 -220 kW	**48-135245**		outside diameter strut 55 mm; Conditions see certificates VA: lowering (expertise): 30-50 mm; axle load to: 1210 kg HA: lowering (expertise): 30-50 mm; axle load to: 1250 kg
B16 RC **1.4 TSI, 1.4 TSI EcoFuel, 1.6, 1.6 FSI, 1.6 TDI, 1.8 TSI, 1.9 TDI, 2.0 BlueTDI, 2.0 FSI, 2.0 FSI 4motion, 2.0 TDI, 2.0 TDI 4motion, 2.0 TDI 16V, 2.0 TDI 16V 4motion, 2.0 TDI 4motion, 2.0 TFSI, 3.2 FSI 4motion, 3.6 FSI 4motion, 3.6 R36 4motion** 04/07 - 75 -220 kW	**49-196849**		Øa: 55 mm; disconect DCC; without electronic suspension control; mark: G07, G08, G09, G11; Conditions see certificates VA: lowering (expertise): 20-40 mm; axle load to: 1140 kg HA: lowering (expertise): 20-40 mm; axle load to: 1040 kg
VW PASSAT Variant (3C5)			
B1 **1.4 TSI, 1.4 TSI EcoFuel, 1.6, 1.6 FSI, 1.6 TDI, 1.8 TSI, 1.9 TDI, 2.0 BlueTDI, 2.0 FSI, 2.0 FSI 4motion, 2.0 TDI, 2.0 TDI 4motion, 2.0 TDI 16V, 2.0 TDI 16V 4motion, 2.0 TDI 4motion, 2.0 TFSI, 3.2 FSI 4motion** 11/05 - 75 -184 kW	**12-224074**	**12-224081**	VA: with ball bearing HA: without ball bearing
B3 **1.4 TSI, 1.4 TSI EcoFuel, 1.6, 1.6 FSI** 08/05 - 75 -110 kW	**36-199815**	**36-199662**	with standard chassis
B3 **2.0 FSI 4motion** 09/05 - 110 kW	**36-199563**	**36-199679**	with standard chassis
B3 **2.0 FSI, 2.0 TFSI** 08/05 - 125 -147 kW	**36-199563**	**36-199662**	with standard chassis
B3 **1.6 TDI, 1.8 TSI, 2.0 FSI** 08/05 - 77 -118 kW	**36-199839**	**36-199662**	with standard chassis
B3 **1.9 TDI, 2.0 BlueTDI, 2.0 TDI, 2.0 TDI 16V** 08/05 - 77 -125 kW	**36-199556**	**36-199662**	with standard chassis
B3 **2.0 TDI 4motion, 2.0 TDI 16V 4motion, 2.0 TDI 4motion** 08/05 - 103 -125 kW	**36-199556**	**36-199679**	with standard chassis

VW				
VW PASSAT Variant (3C5)				
B4	**1.4 TSI, 1.4 TSI EcoFuel, 1.6, 1.6 FSI, 1.6 TDI, 1.8 TSI, 1.9 TDI, 2.0 BlueTDI, 2.0 FSI, 2.0 FSI 4motion, 2.0 TDI, 2.0 TDI 4motion, 2.0 TDI 16V, 2.0 TDI 16V 4motion, 2.0 TDI 4motion, 2.0 TFSI, 3.2 FSI 4motion** 11/05 - 75 -184 kW	**22-151056**	**19-151069**	VA: Øa: 55 mm
B4	**1.4 TSI, 1.4 TSI EcoFuel, 1.6, 1.6 FSI, 1.6 TDI, 1.8 TSI, 1.9 TDI, 2.0 BlueTDI, 2.0 FSI, 2.0 FSI 4motion, 2.0 TDI, 2.0 TDI 4motion, 2.0 TDI 16V, 2.0 TDI 16V 4motion, 2.0 TDI 4motion, 2.0 TFSI, 3.2 FSI 4motion** 11/05 - 75 -184 kW	**22-151070**	**19-151083**	with sports suspension VA: Øa: 55 mm
B6 Sport	**1.4 TSI, 1.4 TSI EcoFuel, 1.6, 1.6 FSI, 1.6 TDI, 1.8 TSI, 1.9 TDI, 2.0 BlueTDI, 2.0 FSI, 2.0 FSI 4motion, 2.0 TDI, 2.0 TDI 4motion, 2.0 TDI 16V, 2.0 TDI 16V 4motion, 2.0 TDI 4motion, 2.0 TFSI, 3.2 FSI 4motion** 11/05 - 75 -184 kW	**35-122074**	**24-172936**	VA: Øa: 55 mm
B8	**1.4 TSI, 1.4 TSI EcoFuel, 1.6, 1.6 FSI, 1.6 TDI, 1.8 TSI, 1.9 TDI, 2.0 BlueTDI, 2.0 FSI, 2.0 FSI 4motion, 2.0 TDI, 2.0 TDI 4motion, 2.0 TDI 16V, 2.0 TDI 16V 4motion, 2.0 TDI 4motion, 2.0 TFSI, 3.2 FSI 4motion, 3.6 R36 4motion** 04/07 - 75 -220 kW	**35-122081**	**24-178006**	VA: Øa: 55 mm
B12 PK	**1.4 TSI, 1.8 TSI, 1.9 TDI, 2.0 FSI, 2.0 TDI, 2.0 TDI 16V, 2.0 TFSI** 08/05 - 77 -147 kW	**46-184436**		outside diameter strut 55 mm; without electronic suspension control; Conditions see certificates VA: lowering (expertise): 30 mm; axle load to: 1180 kg HA: without ride height adjustment; lowering (expertise): 30 mm; axle load to: 1130 kg
B12 PK	**1.6, 1.6 FSI, 2.0 FSI** 08/05 - 75 -110 kW	**46-184429**		outside diameter strut 55 mm; without electronic suspension control; Conditions see certificates VA: lowering (expertise): 30 mm; axle load to: 1040 kg HA: without ride height adjustment; lowering (expertise): 30 mm; axle load to: 1130 kg
B12 PK	**2.0 FSI 4motion, 2.0 TDI 4motion, 2.0 TDI 16V 4motion, 3.2 FSI 4motion** 08/05 - 103 -184 kW	**46-184443**		outside diameter strut 55 mm; without electronic suspension control; Conditions see certificates VA: lowering (expertise): 30 mm; axle load to: 1180 kg HA: without ride height adjustment; lowering (expertise): 30 mm; axle load to: 1230 kg
B14	**1.4 TSI, 1.4 TSI EcoFuel, 1.6, 1.6 FSI, 1.6 TDI, 1.8 TSI, 1.9 TDI, 2.0 BlueTDI, 2.0 FSI, 2.0 TDI, 2.0 TDI 16V, 2.0 TFSI** 08/05 - 75 -147 kW	**47-127708**		outside diameter strut 55 mm; Conditions see certificates VA: lowering (expertise): 30-50 mm; axle load to: 1210 kg HA: lowering (expertise): 30-50 mm; axle load to: 1250 kg
B16 PSS10	**1.4 TSI, 1.4 TSI EcoFuel, 1.6, 1.6 FSI, 1.6 TDI, 1.8 TSI, 1.9 TDI, 2.0 BlueTDI, 2.0 FSI, 2.0 TDI, 2.0 TDI 16V, 2.0 TFSI** 08/05 - 75 -147 kW	**48-135245**		outside diameter strut 55 mm; Conditions see certificates VA: lowering (expertise): 30-50 mm; axle load to: 1210 kg HA: lowering (expertise): 30-50 mm; axle load to: 1250 kg
B16 RC	**1.4 TSI, 1.4 TSI EcoFuel, 1.6, 1.6 FSI, 1.6 TDI, 1.8 TSI, 1.9 TDI, 2.0 BlueTDI, 2.0 FSI, 2.0 TDI, 2.0 TDI 16V, 2.0 TFSI** 08/05 - 75 -147 kW	**49-196849**		Øa: 55 mm; disconect DCC; without electronic suspension control; mark: G07, G08, G09, G11; Conditions see certificates VA: lowering (expertise): 20-40 mm; axle load to: 1140 kg HA: lowering (expertise): 20-40 mm; axle load to: 1040 kg
VW PASSAT CC				
B1	**1.4 TSI MultiFuel, 1.8 TSI, 2.0 BlueTDI, 2.0 TDI, 2.0 TDI 4motion, 2.0 TSI, 3.6 4motion** 06/08 - 100 -220 kW	**12-224074**	**12-224081**	VA: with ball bearing HA: without ball bearing

V

VW				
VW PASSAT CC				
B4	**1.4 TSI MultiFuel, 1.8 TSI, 2.0 BlueTDI, 2.0 TDI, 2.0 TDI 4motion, 2.0 TSI, 3.6 4motion** 06/08 - 100 -220 kW	**22-151056**	**19-151069**	with standard chassis VA: Øa: 55 mm
B4	**1.4 TSI MultiFuel, 1.8 TSI, 2.0 BlueTDI, 2.0 TDI, 2.0 TDI 4motion, 2.0 TSI, 3.6 4motion** 06/08 - 100 -220 kW	**22-151070**	**19-151083**	with sports suspension VA: Øa: 55 mm
B6 Sport	**1.4 TSI MultiFuel, 1.8 TSI, 2.0 BlueTDI, 2.0 TDI, 2.0 TDI 4motion, 2.0 TSI, 3.6 4motion** 06/08 - 100 -220 kW	**35-122074**	**24-172936**	VA: Øa: 55 mm
B8	**1.4 TSI MultiFuel, 1.8 TSI, 2.0 BlueTDI, 2.0 TDI, 2.0 TDI 4motion, 2.0 TSI, 3.6 4motion** 06/08 - 100 -220 kW	**35-122081**	**24-178006**	VA: Øa: 55 mm
B12 PK	**2.0 TDI 4motion, 3.6 4motion** 06/08 - 103 -220 kW	**46-184399**		outside diameter strut 55 mm; without electronic suspension control; Conditions see certificates VA: lowering (expertise): 25 mm; axle load to: 1170 kg HA: without ride height adjustment; lowering (expertise): 25 mm; axle load to: 1100 kg
B14	**1.4 TSI MultiFuel, 1.8 TSI, 2.0 BlueTDI, 2.0 TDI, 2.0 TSI** 11/10 - 100 -155 kW	**47-127708**		disconect DCC; outside diameter strut 55 mm; without electronic suspension control; Conditions see certificates VA: lowering (expertise): 30-50 mm; axle load to: 1210 kg HA: lowering (expertise): 30-50 mm; axle load to: 1250 kg
B16 PSS10	**1.4 TSI MultiFuel, 1.8 TSI, 2.0 BlueTDI, 2.0 TDI, 2.0 TSI** 11/10 - 100 -155 kW	**48-135245**		disconect DCC; outside diameter strut 55 mm; without electronic suspension control; Conditions see certificates VA: lowering (expertise): 30-50 mm; axle load to: 1210 kg HA: lowering (expertise): 30-50 mm; axle load to: 1250 kg
B16 RC	**1.4 TSI MultiFuel, 1.8 TSI, 2.0 BlueTDI, 2.0 TDI, 2.0 TSI** 11/10 - 100 -155 kW	**49-196849**		Øa: 55 mm; disconect DCC; without electronic suspension control; mark: G07, G08, G09, G11; Conditions see certificates VA: lowering (expertise): 20-40 mm; axle load to: 1140 kg HA: lowering (expertise): 20-40 mm; axle load to: 1040 kg
VW PASSAT (362)				
B1	**1.4 TSI, 1.4 TSI EcoFuel, 1.4 TSI MultiFuel, 1.6 TDI, 1.8 TSI, 2.0 TDI, 2.0 TDI 4motion, 2.0 TSI, 3.6 FSI 4motion** 08/10 - 77 -220 kW	**12-224074**	**12-224081**	VA: with ball bearing HA: without ball bearing
B4	**1.4 TSI, 1.4 TSI EcoFuel, 1.4 TSI MultiFuel, 1.6 TDI, 1.8 TSI, 2.0 TDI, 2.0 TDI 4motion, 2.0 TSI, 3.6 FSI 4motion** 08/10 - 77 -220 kW	**22-151056**	**19-151069**	with standard chassis; without electronic suspension control VA: Øa: 55 mm
B4	**1.4 TSI, 1.4 TSI EcoFuel, 1.4 TSI MultiFuel, 1.6 TDI, 1.8 TSI, 2.0 TDI, 2.0 TDI 4motion, 2.0 TSI, 3.6 FSI 4motion** 08/10 - 77 -220 kW	**22-151070**	**19-151083**	with sports suspension; without electronic suspension control VA: Øa: 55 mm
B6 Sport	**1.4 TSI, 1.4 TSI EcoFuel, 1.4 TSI MultiFuel, 1.6 TDI, 1.8 TSI, 2.0 TDI, 2.0 TDI 4motion, 2.0 TSI, 3.6 FSI 4motion** 08/10 - 77 -220 kW	**35-122074**	**24-172936**	without electronic suspension control VA: Øa: 55 mm
B8	**1.4 TSI, 1.4 TSI EcoFuel, 1.4 TSI MultiFuel, 1.6 TDI, 1.8 TSI, 2.0 TDI, 2.0 TDI 4motion, 2.0 TSI, 3.6 FSI 4motion** 08/10 - 77 -220 kW	**35-122081**	**24-178006**	without electronic suspension control VA: Øa: 55 mm
B14	**1.4 TSI, 1.4 TSI EcoFuel, 1.4 TSI MultiFuel, 1.6 TDI, 1.8 TSI, 2.0 TDI, 2.0 TDI 4motion, 2.0 TSI, 3.6 FSI 4motion** 08/10 - 77 -220 kW	**47-127708**		disconect DCC; outside diameter strut 55 mm; without electronic suspension control; Conditions see certificates VA: lowering (expertise): 30-50 mm; axle load to: 1210 kg HA: lowering (expertise): 30-50 mm; axle load to: 1240 kg

VW

VW PASSAT (362)

B16 PSS10	**1.4 TSI, 1.4 TSI EcoFuel, 1.4 TSI MultiFuel, 1.6 TDI, 1.8 TSI, 2.0 TDI, 2.0 TDI 4motion, 2.0 TSI, 3.6 FSI 4motion** 08/10 - 77 -220 kW	**48-135245**		disconect DCC; outside diameter strut 55 mm; without electronic suspension control; Conditions see certificates VA: lowering (expertise): 30-50 mm; axle load to: 1210 kg HA: lowering (expertise): 30-50 mm; axle load to: 1250 kg
B16 RC	**1.4 TSI, 1.4 TSI EcoFuel, 1.4 TSI MultiFuel, 1.6 TDI, 1.8 TSI, 2.0 TDI, 2.0 TDI 4motion, 2.0 TSI, 3.6 FSI 4motion** 08/10 - 77 -220 kW	**49-196849**		Øa: 55 mm; disconect DCC; without electronic suspension control; mark: G07, G08, G09, G11; Conditions see certificates VA: lowering (expertise): 20-40 mm; axle load to: 1140 kg HA: lowering (expertise): 20-40 mm; axle load to: 1040 kg

VW PASSAT Variant (365)

B1	**1.4 TSI, 1.4 TSI EcoFuel, 1.4 TSI MultiFuel, 1.6 TDI, 1.8 TSI, 2.0 TDI, 2.0 TDI 4motion, 2.0 TSI, 2.0 TSI 4motion, 3.6 FSI 4motion** 08/10 - 77 -220 kW	**12-224074**	**12-224081**	VA: with ball bearing HA: without ball bearing
B4	**1.4 TSI, 1.4 TSI EcoFuel, 1.4 TSI MultiFuel, 1.6 TDI, 1.8 TSI, 2.0 TDI, 2.0 TDI 4motion, 2.0 TSI, 2.0 TSI 4motion, 3.6 FSI 4motion** 08/10 - 77 -220 kW	**22-151056**	**19-151069**	with standard chassis; without electronic suspension control VA: Øa: 55 mm
B4	**1.4 TSI, 1.4 TSI EcoFuel, 1.4 TSI MultiFuel, 1.6 TDI, 1.8 TSI, 2.0 TDI, 2.0 TDI 4motion, 2.0 TSI, 2.0 TSI 4motion, 3.6 FSI 4motion** 08/10 - 77 -220 kW	**22-151070**	**19-151083**	with sports suspension; without electronic suspension control VA: Øa: 55 mm
B6 Sport	**1.4 TSI, 1.4 TSI EcoFuel, 1.4 TSI MultiFuel, 1.6 TDI, 1.8 TSI, 2.0 TDI, 2.0 TDI 4motion, 2.0 TSI, 2.0 TSI 4motion, 3.6 FSI 4motion** 08/10 - 77 -220 kW	**35-122074**	**24-172936**	without electronic suspension control VA: Øa: 55 mm
B8	**1.4 TSI, 1.4 TSI EcoFuel, 1.4 TSI MultiFuel, 1.6 TDI, 1.8 TSI, 2.0 TDI, 2.0 TDI 4motion, 2.0 TSI, 2.0 TSI 4motion, 3.6 FSI 4motion** 08/10 - 77 -220 kW	**35-122081**	**24-178006**	with sports suspension; without electronic suspension control VA: Øa: 55 mm
B14	**1.4 TSI, 1.4 TSI EcoFuel, 1.4 TSI MultiFuel, 1.6 TDI, 1.8 TSI, 2.0 TDI, 2.0 TSI** 08/10 - 77 -155 kW	**47-127708**		disconect DCC; outside diameter strut 55 mm; without electronic suspension control; Conditions see certificates VA: lowering (expertise): 30-50 mm; axle load to: 1210 kg HA: lowering (expertise): 30-50 mm; axle load to: 1240 kg
B16 PSS10	**1.4 TSI, 1.4 TSI EcoFuel, 1.4 TSI MultiFuel, 1.6 TDI, 1.8 TSI, 2.0 TDI, 2.0 TSI** 08/10 - 77 -155 kW	**48-135245**		disconect DCC; outside diameter strut 55 mm; without electronic suspension control; Conditions see certificates VA: lowering (expertise): 30-50 mm; axle load to: 1210 kg HA: lowering (expertise): 30-50 mm; axle load to: 1250 kg
B16 RC	**1.4 TSI, 1.4 TSI EcoFuel, 1.4 TSI MultiFuel, 1.6 TDI, 1.8 TSI, 2.0 TDI, 2.0 TSI** 08/10 - 77 -155 kW	**49-196849**		Øa: 55 mm; disconect DCC; without electronic suspension control; mark: G07, G08, G09, G11; Conditions see certificates VA: lowering (expertise): 20-40 mm; axle load to: 1140 kg HA: lowering (expertise): 20-40 mm; axle load to: 1040 kg

VW POLO (86)

B1	**0.8, 0.9, 1.1, 1.3** 03/75 - 09/81 25 -44 kW	**12-117383**		
B3	**0.8, 0.9, 1.1, 1.3** 03/75 - 09/81 25 -44 kW	*36-134151*	**36-131051**	with standard chassis
B4	**0.8, 0.9, 1.1, 1.3** 03/75 - 09/81 25 -44 kW	**21-030345**	**19-019642** **11-101390** SP	
B6 Sport	**0.8, 0.9, 1.1, 1.3** 03/75 - 09/81 25 -44 kW	**34-000175**	**24-181495** **11-101390** SP	

V

VW				
VW POLO (86)				
B8	**0.8, 0.9, 1.1, 1.3** 03/75 - 09/81 25 -44 kW	**34-030011**	**24-016193** **11-101390** SP	
VW POLO (86C, 80)				
B1	**0.9, 1.0, 1.0 CAT, 1.1, 1.3, 1.3 CAT, 1.3 D, 1.4 D** 10/81 - 09/94 29 -56 kW	**12-117383**		
B3	**0.9, 1.0, 1.0 CAT, 1.1, 1.3, 1.3 CAT** 10/81 - 09/94 29 -44 kW	**36-130948**	**36-131051**	with standard chassis
B3	**1.3, 1.3 CAT** 09/82 - 03/91 55 -56 kW	**36-134342**	**36-131051**	with standard chassis
B4	**0.9, 1.0, 1.0 CAT, 1.1, 1.3, 1.3 CAT, 1.3 D, 1.4 D** 10/81 - 09/94 29 -56 kW	**21-030345**	**19-019642** **11-101390** SP	
B6 Sport	**0.9, 1.0, 1.0 CAT, 1.1, 1.3, 1.3 CAT, 1.3 D, 1.4 D** 10/81 - 09/94 29 -56 kW	**34-000175**	**24-181495** **11-101390** SP	
B8	**0.9, 1.0, 1.0 CAT, 1.1, 1.3, 1.3 CAT, 1.3 D, 1.4 D** 10/81 - 09/94 29 -56 kW	**34-030011**	**24-016193** **11-101390** SP	
B12 PK	**0.9, 1.0, 1.0 CAT, 1.1, 1.3, 1.3 CAT, 1.3 D, 1.4 D** 10/81 - 09/94 29 -56 kW	**46-192189**		Conditions see certificates VA: lowering (expertise): 30-40 mm; axle load to: 640 kg HA: lowering (expertise): 30-35 mm; axle load to: 630 kg
VW POLO CLASSIC (86C, 80)				
B1	**1.0, 1.3, 1.3 CAT, 1.3 D, 1.4 D** 01/85 - 09/94 29 -40 kW	**12-117383**		
B3	**1.0, 1.3, 1.3 CAT** 01/85 - 09/94 29 -40 kW	**36-130948**	**36-131051**	with standard chassis
B4	**1.0, 1.3, 1.3 CAT, 1.3 D, 1.4 D** 01/85 - 09/94 29 -40 kW	**21-030345**	**19-019642** **11-101390** SP	
B6 Sport	**1.0, 1.3, 1.3 CAT, 1.3 D, 1.4 D** 01/85 - 09/94 29 -40 kW	**34-000175**	**24-181495** **11-101390** SP	
B8	**1.0, 1.3, 1.3 CAT, 1.3 D, 1.4 D** 01/85 - 09/94 29 -40 kW	**34-030011**	**24-016193** **11-101390** SP	
B12 PK	**1.0, 1.3, 1.3 CAT, 1.3 D, 1.4 D** 01/85 - 09/94 29 -40 kW	**46-192189**		Conditions see certificates VA: lowering (expertise): 30-40 mm; axle load to: 640 kg HA: lowering (expertise): 30-35 mm; axle load to: 630 kg
VW POLO Coupe (86C, 80)				
B1	**1.0, 1.0 CAT, 1.1, 1.3, 1.3 CAT, 1.3 D, 1.4 D** 10/81 - 09/94 29 -57 kW	**12-117383**		
B3	**1.0, 1.0 CAT, 1.1, 1.3, 1.3 CAT** 10/81 - 08/94 29 -44 kW	**36-130948**	**36-131051**	with standard chassis
B3	**1.3, 1.3 CAT** 09/82 - 09/94 55 -57 kW	**36-134342**	**36-131051**	with standard chassis
B4	**1.0, 1.0 CAT, 1.1, 1.3, 1.3 CAT, 1.3 D, 1.4 D** 10/81 - 09/94 29 -57 kW	**21-030345**	**19-019642** **11-101390** SP	

V

VW			
VW POLO Coupe (86C, 80)			
B6 Sport **1.0, 1.0 CAT, 1.1, 1.3, 1.3 CAT, 1.3 D, 1.3 G40, 1.4 D** 10/81 - 09/94 29 -85 kW	**34-000175**	**24-181495** **11-101390** SP	
B8 **1.0, 1.0 CAT, 1.1, 1.3, 1.3 CAT, 1.3 D, 1.3 G40, 1.4 D** 10/81 - 09/94 29 -85 kW	**34-030011**	**24-016193** **11-101390** SP	
B12 PK **1.0, 1.0 CAT, 1.1, 1.3, 1.3 CAT, 1.3 D, 1.3 G40, 1.4 D** 10/81 - 09/94 29 -85 kW	**46-192189**		Conditions see certificates VA: lowering (expertise): 30-40 mm; axle load to: 640 kg HA: lowering (expertise): 30-35 mm; axle load to: 630 kg
VW POLO Box (86CF)			
B3 **1.0, 1.3, 1.4 D** 08/92 - 07/94 33 -40 kW	**36-130948**	**36-131051**	with standard chassis
VW POLO (6N1)			
B1 **1.7 SDI, 100 1.4 16V, 120 1.6 16V GTI, 45 1.0, 50 1.0, 55 1.3, 55 1.4, 60 1.4, 60 1.7 SDI, 64 1.9 D, 64 1.9 SDI, 75 1.6** 10/94 - 10/99 33 -88 kW	**12-116959**	**12-117239**	VA: with ball bearing
B2 **1.7 SDI, 100 1.4 16V, 45 1.0, 50 1.0, 55 1.3, 55 1.4, 60 1.4, 60 1.7 SDI, 64 1.9 D, 64 1.9 SDI, 75 1.6** 10/94 - 10/99 33 -74 kW	**17-104029** **11-101291** SP	**15-104311** **11-106470** SP	
B3 **1.7 SDI, 100 1.4 16V, 120 1.6 16V GTI, 45 1.0, 50 1.0, 55 1.3, 55 1.4, 60 1.4, 60 1.7 SDI, 64 1.9 D, 64 1.9 SDI, 75 1.6** 10/94 - 10/99 33 -88 kW	**37-130930**	**36-130900**	with standard chassis
B4 **1.7 SDI, 100 1.4 16V, 45 1.0, 50 1.0, 55 1.3, 55 1.4, 60 1.4, 60 1.7 SDI, 64 1.9 D, 64 1.9 SDI, 75 1.6** 10/94 - 10/99 33 -74 kW	**22-045010** **11-101291** SP	**19-128863** **11-106470** SP	
B6 Sport **1.7 SDI, 100 1.4 16V, 120 1.6 16V GTI, 45 1.0, 50 1.0, 55 1.3, 55 1.4, 60 1.4, 60 1.7 SDI, 64 1.9 D, 64 1.9 SDI, 75 1.6** 10/94 - 10/99 33 -88 kW	**22-041371** **11-101291** SP	**24-021227** **11-106470** SP	
B8 **1.7 SDI, 100 1.4 16V, 120 1.6 16V GTI, 45 1.0, 50 1.0, 55 1.3, 55 1.4, 60 1.4, 60 1.7 SDI, 64 1.9 D, 64 1.9 SDI, 75 1.6** 10/94 - 10/99 33 -88 kW	**22-041364** **11-101291** SP	**24-021197** **11-106470** SP	
B10 **1.7 SDI, 100 1.4 16V, 45 1.0, 50 1.0, 55 1.3, 55 1.4, 60 1.4, 60 1.7 SDI, 64 1.9 D, 64 1.9 SDI, 75 1.6** 10/94 - 10/99 33 -74 kW	**46-111999**		Conditions see certificates VA: lowering (expertise): 60 mm HA: lowering (expertise): 40 mm
B12 PK **1.7 SDI, 100 1.4 16V, 120 1.6 16V GTI, 45 1.0, 50 1.0, 55 1.3, 55 1.4, 60 1.4, 60 1.7 SDI, 64 1.9 D, 64 1.9 SDI, 75 1.6** 10/94 - 10/99 33 -88 kW	**46-190789**		Conditions see certificates VA: lowering (expertise): 30 mm; axle load to: 820 kg HA: lowering (expertise): 30 mm; axle load to: 750 kg
B12 SL **1.7 SDI, 100 1.4 16V, 120 1.6 16V GTI, 45 1.0, 50 1.0, 55 1.3, 55 1.4, 60 1.4, 60 1.7 SDI, 64 1.9 D, 64 1.9 SDI, 75 1.6** 10/94 - 10/99 33 -88 kW	**46-190765**		Conditions see certificates VA: lowering (expertise): 45-50 mm; axle load to: 800 kg HA: lowering (expertise): 30-35 mm; axle load to: 750 kg
B14 **1.7 SDI, 100 1.4 16V, 120 1.6 16V GTI, 45 1.0, 50 1.0, 55 1.3, 55 1.4, 60 1.4, 60 1.7 SDI, 64 1.9 D, 64 1.9 SDI, 75 1.6** 10/94 - 10/99 33 -88 kW	**47-080720**		Conditions see certificates VA: lowering (expertise): 30-50 mm; axle load to: 870 kg HA: lowering (expertise): 20-40 mm; axle load to: 780 kg

VW

VW POLO (6N1)

B16 PSS9	**1.7 SDI, 100 1.4 16V, 120 1.6 16V GTI, 45 1.0, 50 1.0, 55 1.3, 55 1.4, 60 1.4, 60 1.7 SDI, 64 1.9 D, 64 1.9 SDI, 75 1.6** 10/94 - 10/99 33 -88 kW	**48-080736**		Conditions see certificates VA: lowering (expertise): 30-50 mm; axle load to: 870 kg HA: lowering (expertise): 20-40 mm; axle load to: 780 kg

VW POLO Box (6NF)

B2	**1.0, 1.4, 1.7 SDI, 1.9 D, 1.9 SDI** 10/94 - 12/99 33 -47 kW	**17-104029** **11-101307** SP	**15-106384**	
B3	**1.0, 1.4, 1.7 SDI, 1.9 D, 1.9 SDI** 10/94 - 10/99 33 -47 kW	**37-130930**	**36-130900**	with standard chassis
B4	**1.0, 1.4, 1.7 SDI, 1.9 D, 1.9 SDI** 10/94 - 12/99 33 -47 kW	**22-044761** **11-101307** SP	**19-106397**	

VW POLO CLASSIC (6KV2)

B1	**1.0, 1.4, 1.6 L, 1.8, 1.8 GDi LS, 1.8 LE, 1.8 SEi Limited, 1.9 D, 100 1.6, 110 1.9 TDI, 2.0, 54 1.4, 57 1.7 SDI, 60 1.4, 64 1,9 D, 64 1.9 SDI, 68 1.9 SDI, 75 1.4 16V, 75 1.6, 90 1.8, 90 1.9 TDI** 11/95 - 07/05 37 -85 kW	**12-117659**	**12-117239**	VA: with ball bearing
B2	**1.0, 1.4, 1.6 L, 1.8, 1.8 GDi LS, 1.8 LE, 1.8 SEi Limited, 1.9 D, 100 1.6, 110 1.9 TDI, 2.0, 54 1.4, 57 1.7 SDI, 60 1.4, 64 1,9 D, 64 1.9 SDI, 68 1.9 SDI, 75 1.4 16V, 75 1.6, 90 1.8, 90 1.9 TDI** 11/95 - 07/05 37 -85 kW	**17-107150** **11-101291** SP	**15-104311** **11-106487** SP	
B3	**1.0, 1.4, 1.6 L, 100 1.6, 54 1.4, 60 1.4, 75 1.6** 11/95 - 10/99 37 -74 kW	**37-130930**	**36-130641**	with standard chassis
B3	**1.0, 1.4, 1.6 L, 100 1.6, 54 1.4, 60 1.4, 75 1.6** 11/95 - 09/99 37 -74 kW		**36-134106**	with standard chassis; Heavy Duty Version .
B3	**1.0, 1.4, 1.6 L, 100 1.6, 60 1.4, 75 1.4 16V, 75 1.6** 10/99 - 07/02 37 -74 kW	**36-197965**	**36-130641**	with standard chassis
B3	**1.4, 1.6 L, 1.8, 1.8 GDi LS, 1.8 LE, 1.8 SEi Limited, 1.9 D, 100 1.6, 110 1.9 TDI, 2.0, 57 1.7 SDI, 60 1.4, 64 1,9 D, 64 1.9 SDI, 68 1.9 SDI, 75 1.4 16V, 75 1.6, 90 1.8, 90 1.9 TDI** 11/95 - 07/05 42 -85 kW		**36-203109**	with standard chassis; Heavy Duty Version .
B3	**1.8, 1.8 LE, 1.8 SEi Limited, 2.0, 90 1.8** 05/96 - 09/99 66 -85 kW		**36-130641**	with standard chassis
B3	**1.8, 1.8 GDi LS, 1.8 SEi Limited, 2.0, 90 1.8** 10/99 - 07/05 66 -82 kW	**36-201884**	**36-130641**	with standard chassis
B3	**57 1.7 SDI** 07/97 - 09/99 42 kW	**36-203123**	**36-130641**	with standard chassis
B3	**57 1.7 SDI** 10/99 - 09/01 42 kW		**36-130641**	with standard chassis
B3	**57 1.7 SDI** 10/99 - 09/01 42 kW	**36-201884**		with standard chassis; Heavy Duty Version .
B3	**1.9 D, 64 1,9 D, 64 1.9 SDI** 12/95 - 09/99 47 -48 kW	**36-203130**	**36-130641**	with standard chassis
B3	**1.9 D, 68 1.9 SDI** 10/99 - 09/01 48 -50 kW	**36-197965**	**36-130641**	with standard chassis

V

VW				
VW POLO CLASSIC (6KV2)				
B3	**110 1.9 TDI, 90 1.9 TDI** 09/96 - 09/99 66 -81 kW	36-203130	**36-130641**	with standard chassis
B3	**110 1.9 TDI, 90 1.9 TDI** 10/99 - 09/01 66 -81 kW	**36-201884**	**36-130641**	with standard chassis
B4	**1.0, 1.4, 1.6 L, 1.8, 1.8 GDi LS, 1.8 LE, 1.8 SEi Limited, 1.9 D, 100 1.6, 110 1.9 TDI, 2.0, 54 1.4, 57 1.7 SDI, 60 1.4, 64 1,9 D, 64 1.9 SDI, 68 1.9 SDI, 75 1.4 16V, 75 1.6, 90 1.8, 90 1.9 TDI** 11/95 - 07/05 37 -85 kW	**22-045027** **11-101291** SP	**19-028484** **11-106487** SP	
B6 Sport	**1.0, 1.4, 1.6 L, 1.8, 1.8 GDi LS, 1.8 LE, 1.8 SEi Limited, 1.9 D, 100 1.6, 110 1.9 TDI, 2.0, 54 1.4, 57 1.7 SDI, 60 1.4, 64 1,9 D, 64 1.9 SDI, 68 1.9 SDI, 75 1.4 16V, 75 1.6, 90 1.8, 90 1.9 TDI** 11/95 - 07/05 37 -85 kW	**22-041371** **11-101291** SP	**24-021227** **11-106470** SP	
B8	**1.0, 100 1.6, 110 1.9 TDI, 54 1.4, 57 1.7 SDI, 60 1.4, 64 1,9 D, 64 1.9 SDI, 68 1.9 SDI, 75 1.4 16V, 75 1.6, 90 1.8, 90 1.9 TDI** 11/95 - 12/01 37 -81 kW	**22-041364** **11-101291** SP	**24-021197** **11-106470** SP	
B12 PK	**1.4, 1.6 L, 1.8, 1.8 GDi LS, 1.8 LE, 1.8 SEi Limited, 100 1.6, 2.0, 54 1.4, 60 1.4, 75 1.4 16V, 75 1.6, 90 1.8** 11/95 - 07/05 40 -85 kW	**46-190819**		Conditions see certificates VA: lowering (expertise): 30 mm; axle load to: 865 kg HA: lowering (expertise): 30 mm; axle load to: 790 kg
B12 PK	**1.9 D, 110 1.9 TDI, 57 1.7 SDI, 64 1,9 D, 64 1.9 SDI, 68 1.9 SDI, 90 1.9 TDI** 12/95 - 09/01 42 -81 kW	**46-190840**		Conditions see certificates VA: lowering (expertise): 30 mm; axle load to: 900 kg HA: lowering (expertise): 30 mm; axle load to: 790 kg
VW POLO Variant (6KV5)				
B1	**1.4, 1.4 16V, 1.6, 1.7 SDI, 1.8, 1.9 SDI, 1.9 TDI** 06/98 - 09/01 40 -81 kW	**12-117659**	**12-117239**	VA: with ball bearing
B2	**1.4, 1.4 16V, 1.6, 1.7 SDI, 1.8, 1.9 SDI, 1.9 TDI** 06/98 - 09/01 40 -81 kW	**17-104029** **11-101291** SP		
B3	**1.4, 1.6** 05/97 - 09/99 40 -74 kW	**37-130930**	**36-134106**	with standard chassis
B3	**1.4, 1.4 16V, 1.6** 10/99 - 09/01 40 -74 kW	**36-197965**	36-203109	with standard chassis
B3	**1.4, 1.4 16V, 1.6, 1.7 SDI, 1.8, 1.9 SDI, 1.9 TDI** 10/99 - 09/01 40 -81 kW		**36-200825**	with standard chassis; Heavy Duty Version .
B3	**1.8, 1.9 TDI** 05/97 - 09/99 66 -81 kW	36-203130	**36-134106**	with standard chassis
B3	**1.8, 1.9 TDI** 10/99 - 09/01 66 -81 kW	**36-201884**	36-203109	with standard chassis
B3	**1.7 SDI** 08/97 - 09/99 42 kW	36-203123	**36-134106**	with standard chassis
B3	**1.7 SDI** 10/99 - 09/01 42 kW	**36-201884**	36-203109	with standard chassis
B3	**1.9 SDI** 06/97 - 09/99 47 kW	36-203130	**36-134106**	with standard chassis

V

VW				
VW POLO Variant (6KV5)				
B3	**1.9 SDI** 10/99 - 09/01 47 -50 kW	**36-197965**	36-203109	with standard chassis
B4	**1.4, 1.4 16V, 1.6, 1.7 SDI, 1.8, 1.9 SDI, 1.9 TDI** 06/98 - 09/01 40 -81 kW	**22-045010** **11-101291** SP		
B6 Sport	**1.4, 1.4 16V, 1.6, 1.7 SDI, 1.8, 1.9 SDI, 1.9 TDI** 06/98 - 09/01 40 -81 kW	**35-043911** **11-101291** SP	**24-026192** **11-101352** SP	
B8	**1.4, 1.4 16V, 1.6, 1.7 SDI, 1.8, 1.9 SDI, 1.9 TDI** 06/98 - 09/01 40 -81 kW	**35-043911**	**24-026208** **11-101352** SP	
VW POLO (6N2)				
B1	**1.0, 1.4, 1.4 16V, 1.4 TDI, 1.6 16V GTI, 1.7 SDI, 1.9 D, 1.9 SDI** 10/99 - 12/00 37 -92 kW	**12-116959**		with standard chassis VA: with ball bearing
B1	**1.0, 1.2, 1.4, 1.4 16V, 1.4 TDI, 1.6 16V GTI, 1.7 SDI, 1.9 D, 1.9 SDI** 01/01 - 10/01 37 -92 kW	**12-117741**		VA: without ball bearing
B2	**1.0, 1.2, 1.4, 1.4 16V, 1.4 TDI, 1.7 SDI, 1.9 D, 1.9 SDI** 10/99 - 10/01 37 -74 kW	**17-106405** **11-101307** SP	**15-104311** **11-106470** SP	
B3	**1.4, 1.4 16V** 10/99 - 09/01 40 -74 kW	**37-131401**	**36-130900**	with standard chassis
B3	**1.4 TDI, 1.7 SDI, 1.9 D, 1.9 SDI** 10/99 - 09/01 44 -66 kW	**37-131418**	**36-130900**	with standard chassis
B4	**1.0, 1.2, 1.4, 1.4 16V, 1.4 TDI, 1.7 SDI, 1.9 D, 1.9 SDI** 10/99 - 10/01 37 -74 kW	**22-044761** **11-101307** SP	**19-128863** **11-106470** SP	
B6 Sport	**1.0, 1.2, 1.4, 1.4 16V, 1.4 TDI, 1.6 16V GTI, 1.7 SDI, 1.9 D, 1.9 SDI** 10/99 - 10/01 37 -92 kW	**22-041371** **11-101307** SP	**24-021227** **11-106470** SP	
B8	**1.0, 1.2, 1.4, 1.4 16V, 1.4 TDI, 1.6 16V GTI, 1.7 SDI, 1.9 D, 1.9 SDI** 10/99 - 10/01 37 -92 kW	**22-041364** **11-101307** SP	**24-021197** **11-106470** SP	
B12 PK	**1.0, 1.2, 1.4, 1.4 16V** 10/99 - 10/01 37 -74 kW	**46-190802**		Conditions see certificates VA: lowering (expertise): 30 mm; axle load to: 800 kg HA: lowering (expertise): 30 mm; axle load to: 780 kg
B12 PK	**1.4, 1.4 16V, 1.4 TDI, 1.6 16V GTI, 1.7 SDI, 1.9 D, 1.9 SDI** 10/99 - 09/01 40 -92 kW	**46-190796**		Conditions see certificates VA: lowering (expertise): 30 mm; axle load to: 850 kg HA: lowering (expertise): 30 mm; axle load to: 780 kg
B12 SL	**1.0, 1.2, 1.4, 1.4 16V, 1.6 16V GTI** 10/99 - 10/01 37 -92 kW	**46-190772**		Conditions see certificates; manual transmission VA: lowering (expertise): 45-50 mm; axle load to: 830 kg HA: lowering (expertise): 30-35 mm; axle load to: 780 kg
B14	**1.0, 1.2, 1.4, 1.4 16V, 1.4 TDI, 1.6 16V GTI, 1.7 SDI, 1.9 D, 1.9 SDI** 10/99 - 10/01 37 -92 kW	**47-081888**		Conditions see certificates VA: lowering (expertise): 30-50 mm; axle load to: 900 kg HA: lowering (expertise): 20-40 mm; axle load to: 780 kg
B16 PSS9	**1.0, 1.2, 1.4, 1.4 16V, 1.4 TDI, 1.6 16V GTI, 1.7 SDI, 1.9 D, 1.9 SDI** 10/99 - 10/01 37 -92 kW	**48-081894**		Conditions see certificates VA: lowering (expertise): 30-50 mm; axle load to: 900 kg HA: lowering (expertise): 20-40 mm; axle load to: 780 kg

VW

VW POLO (9N_)

B1	**1.2, 1.4, 1.4 16V, 1.4 FSI, 1.4 TDI, 1.6 16V, 1.6 Sportline, 1.6 Total Flex, 1.8 GTI, 1.9 SDI, 1.9 TDI, 2.0** 10/01 - 40 -110 kW	**12-224395**		VA: with ball bearing; for PR number: G11/G12/G29/G30
B1	**1.2, 1.4, 1.4 16V, 1.4 FSI, 1.4 TDI, 1.6 16V, 1.6 Sportline, 1.6 Total Flex, 1.8 GTI, 1.9 SDI, 1.9 TDI, 2.0** 10/01 - 40 -110 kW	**12-225323**	**12-117079**	VA: with ball bearing; without sport chassis; without off-road suspension HA: without ball bearing; Material: Rubber/Metal; Material: Aluminium
B3	**1.2** 10/01 - 40 -51 kW	**37-160692**	**36-160716**	with standard chassis
B3	**1.4, 1.4 16V, 1.4 FSI** 02/02 - 55 -74 kW	**37-160678**	**36-160716**	with standard chassis
B3	**1.4 TDI, 1.6 16V, 1.9 SDI, 1.9 TDI** 11/03 - 47 -96 kW	**37-160654**	**36-160716**	with standard chassis
B4	**1.2, 1.4, 1.4 16V, 1.4 FSI, 1.4 TDI, 1.6 16V, 1.6 Sportline, 1.6 Total Flex, 1.9 SDI, 1.9 TDI, 2.0** 10/01 - 40 -96 kW	**22-105813** **11-101321** SP	**19-109572** **11-106470** SP	with standard chassis; with off-road suspension; mark: G27;G11
B6 Sport	**1.2, 1.4, 1.4 16V, 1.4 FSI, 1.4 TDI, 1.6 16V, 1.6 Sportline, 1.6 Total Flex, 1.9 SDI, 1.9 TDI, 2.0** 10/01 - 40 -96 kW	**35-052173**	**24-067898** **11-106470** SP	with standard chassis; with off-road suspension; mark: G27;G11
B8	**1.2, 1.4, 1.4 16V, 1.4 FSI, 1.4 TDI, 1.6 16V, 1.6 Sportline, 1.6 Total Flex, 1.8 GTI, 1.8 GTi Cup Edition, 1.9 SDI, 1.9 TDI, 2.0** 10/01 - 40 -132 kW	**35-052180**	**24-067904** **11-106470** SP	with sports suspension; mark: G29;G30
B12 PK	**1.2, 1.4 16V, 1.4 FSI, 1.6 16V, 1.6 Sportline, 1.6 Total Flex** 10/01 - 04/09 40 -77 kW	**46-183927**		mark: G29,G30; Conditions see certificates; manual transmission VA: lowering (expertise): 30 mm; axle load to: 870 kg HA: lowering (expertise): 30 mm; axle load to: 840 kg
B12 PK	**1.8 GTI, 1.8 GTi Cup Edition** 09/05 - 110 -132 kW	**46-183934**		mark: G29,G30; Conditions see certificates VA: lowering (expertise): 20 mm; axle load to: 960 kg HA: lowering (expertise): 20 mm; axle load to: 840 kg
B12 PK	**1.4 TDI, 1.9 SDI, 1.9 TDI** 11/03 - 47 -96 kW	**46-183934**		mark: G29,G30; Conditions see certificates VA: lowering (expertise): 30 mm; axle load to: 960 kg HA: lowering (expertise): 30 mm; axle load to: 840 kg
B12 SL	**1.2, 1.4 16V, 1.4 FSI, 1.6 16V, 1.6 Sportline, 1.6 Total Flex** 10/01 - 04/09 40 -77 kW	**46-183736**		mark: G29,G30; Conditions see certificates; manual transmission VA: lowering (expertise): 45-50 mm; axle load to: 870 kg HA: lowering (expertise): 30-35 mm; axle load to: 800 kg
B14	**1.2, 1.4, 1.4 16V, 1.4 FSI, 1.4 TDI, 1.6 16V, 1.6 Sportline, 1.6 Total Flex, 1.9 SDI, 1.9 TDI, 2.0** 10/01 - 40 -96 kW	**47-146914**		with standard chassis; Conditions see certificates VA: lowering (expertise): 30-50 mm; axle load to: 960 kg HA: lowering (expertise): 30-45 mm; axle load to: 835 kg
B14	**1.2, 1.4, 1.4 16V, 1.4 FSI, 1.4 TDI, 1.6 16V, 1.6 Sportline, 1.6 Total Flex, 1.8 GTI, 1.8 GTi Cup Edition, 1.9 SDI, 1.9 TDI, 2.0** 10/01 - 40 -132 kW	**47-146914**		with sports suspension; Conditions see certificates VA: lowering (expertise): 15-35 mm; axle load to: 960 kg HA: lowering (expertise): 15-30 mm; axle load to: 835 kg
B14	**1.2, 1.4, 1.4 16V, 1.4 FSI, 1.4 TDI, 1.6 16V, 1.6 Sportline, 1.6 Total Flex, 1.9 SDI, 1.9 TDI, 2.0** 10/01 - 40 -96 kW	**47-146914**		with off-road suspension; mark: Cross, Fun; Conditions see certificates VA: lowering (expertise): 45-65 mm; axle load to: 960 kg HA: lowering (expertise): 45-60 mm; axle load to: 835 kg
B16 PSS9	**1.2, 1.4, 1.4 16V, 1.4 FSI, 1.4 TDI, 1.6 16V, 1.6 Sportline, 1.6 Total Flex, 1.9 SDI, 1.9 TDI, 2.0** 10/01 - 40 -96 kW	**48-146852**		with standard chassis; Conditions see certificates VA: lowering (expertise): 30-50 mm; axle load to: 960 kg HA: lowering (expertise): 30-45 mm; axle load to: 835 kg

V

VW				
VW POLO (9N_)				
B16 PSS9	**1.2, 1.4, 1.4 16V, 1.4 FSI, 1.4 TDI, 1.6 16V, 1.6 Sportline, 1.6 Total Flex, 1.8 GTI, 1.8 GTi Cup Edition, 1.9 SDI, 1.9 TDI, 2.0** 10/01 - 40 -132 kW	**48-146852**		with sports suspension; Conditions see certificates VA: lowering (expertise): 15-35 mm; axle load to: 960 kg HA: lowering (expertise): 15-30 mm; axle load to: 835 kg
B16 PSS9	**1.2, 1.4, 1.4 16V, 1.4 FSI, 1.4 TDI, 1.6 16V, 1.6 Sportline, 1.6 Total Flex, 1.9 SDI, 1.9 TDI, 2.0** 10/01 - 40 -96 kW	**48-146852**		with off-road suspension; mark: Cross; Fun; Conditions see certificates VA: lowering (expertise): 45-65 mm; axle load to: 960 kg HA: lowering (expertise): 45-60 mm; axle load to: 835 kg
VW POLO Saloon				
B3	**1.4** 07/03 - 55 -74 kW	**37-160692**	**36-160716**	with standard chassis
B4	**1.0, 1.4, 1.4 TDI, 1.6, 1.9 SDI, 1.9 TDi, 2.0** 09/02 - 47 -85 kW	**22-105813** **11-101321** SP	**19-109589** **11-106470** SP	
B6 Sport	**1.0, 1.4, 1.4 TDI, 1.6, 1.9 SDI, 1.9 TDi, 2.0** 09/02 - 47 -85 kW	**35-052173**	**24-067898** **11-106470** SP	
B8	**1.0, 1.4, 1.4 TDI, 1.6, 1.9 SDI, 1.9 TDi, 2.0** 09/02 - 47 -85 kW	**35-052180**	**24-067904** **11-106470** SP	
B12 PK	**1.4** 07/03 - 55 -74 kW	**46-183927**		Conditions see certificates; manual transmission VA: lowering (expertise): 30 mm; axle load to: 870 kg HA: lowering (expertise): 30 mm; axle load to: 840 kg
B12 PK	**1.4 TDI, 1.9 SDI** 09/02 - 47 -55 kW	**46-183934**		Conditions see certificates VA: lowering (expertise): 30 mm; axle load to: 960 kg HA: lowering (expertise): 30 mm; axle load to: 840 kg
B14	**1.0, 1.4, 1.4 TDI, 1.6, 1.9 SDI, 1.9 TDi, 2.0** 09/02 - 47 -85 kW	**47-146914**		Conditions see certificates VA: lowering (expertise): 30-50 mm; axle load to: 960 kg HA: lowering (expertise): 30-45 mm; axle load to: 900 kg
B16 PSS9	**1.0, 1.4, 1.4 TDI, 1.6, 1.9 SDI, 1.9 TDi, 2.0** 09/02 - 47 -85 kW	**48-146852**		Conditions see certificates VA: lowering (expertise): 30-50 mm; axle load to: 960 kg HA: lowering (expertise): 30-45 mm; axle load to: 835 kg
VW POLO (6R_)				
B1	**1.2, 1.2 TDI, 1.2 TSI, 1.6 TDI** 06/09 - 44 -77 kW	**12-116966**	**12-226429**	VA: with ball bearing HA: 08/10 ->; for PR number: 1JP/1JS
B1	**1.2 TSI, 1.6 BiFuel** 01/11 - 60 -66 kW		**12-226429**	HA: for PR number: 1JP/1JS
B1	**1.4** 06/09 - 63 kW	**12-116966**	**12-226429**	Engine Code: CGGB VA: with ball bearing HA: 08/01 ->; for PR number: 1JP/1JS
B1	**1.4 GTI** 05/10 - 132 kW	**12-116966**	**12-226429**	VA: with ball bearing HA: 08/10 ->; for PR number: 1JK
B4	**1.2, 1.2 TDI, 1.2 TSI, 1.4, 1.6 BiFuel, 1.6 TDI** 06/09 - 44 -77 kW	**22-183705**	**19-109572**	
B6 Sport	**1.2, 1.2 TDI, 1.2 TSI, 1.4, 1.6 BiFuel, 1.6 TDI** 06/09 - 44 -77 kW	**35-168560**	**24-067898**	
B8	**1.2, 1.2 TDI, 1.2 TSI, 1.4, 1.6 BiFuel, 1.6 TDI** 06/09 - 44 -77 kW	**35-168577**	**24-067904**	
B8	**1.4 GTI** 05/10 - 132 kW	**35-168577**	**24-067904**	

V

VW				
VW POLO (6R_)				
B12 PK	**1.2, 1.4, 1.6 BiFuel** 06/09 - 44 -63 kW	**46-184450**		Conditions see certificates VA: lowering (expertise): 25 mm; axle load to: 860 kg HA: lowering (expertise): 30 mm; axle load to: 820 kg
B12 PK	**1.2 TSI** 11/09 - 77 kW	**46-184450**		Conditions see certificates; manual transmission VA: lowering (expertise): 25 mm; axle load to: 860 kg HA: lowering (expertise): 30 mm; axle load to: 820 kg
B12 PK	**1.2 TSI** 11/09 - 77 kW	**46-184467**		Conditions see certificates; automatic transmission VA: lowering (expertise): 25 mm; axle load to: 940 kg HA: lowering (expertise): 30 mm; axle load to: 820 kg
B12 PK	**1.4 GTI** 05/10 - 132 kW	**46-184467**		Conditions see certificates VA: lowering (expertise): 15 mm; axle load to: 940 kg HA: lowering (expertise): 20 mm; axle load to: 820 kg
B12 PK	**1.2 TDI, 1.6 BiFuel, 1.6 TDI** 06/09 - 55 -77 kW	**46-184467**		Conditions see certificates VA: lowering (expertise): 25 mm; axle load to: 940 kg HA: lowering (expertise): 30 mm; axle load to: 820 kg
B14	**1.2, 1.2 TDI, 1.2 TSI, 1.4, 1.6 BiFuel, 1.6 TDI** 06/09 - 44 -77 kW	**47-168091**		Conditions see certificates VA: lowering (expertise): 35-50 mm; axle load to: 960 kg HA: lowering (expertise): 30-45 mm; axle load to: 800 kg
B14	**1.4 GTI** 05/10 - 132 kW	**47-168091**		Conditions see certificates VA: lowering (expertise): 20-35 mm; axle load to: 960 kg HA: lowering (expertise): 15-30 mm; axle load to: 800 kg
B16 PSS9	**1.2, 1.2 TDI, 1.2 TSI, 1.4, 1.6 BiFuel, 1.6 TDI** 06/09 - 44 -77 kW	**48-168229**		Conditions see certificates VA: lowering (expertise): 35-50 mm; axle load to: 960 kg HA: lowering (expertise): 30-45 mm; axle load to: 800 kg
B16 PSS9	**1.4 GTI** 05/10 - 132 kW	**48-168229**		Conditions see certificates VA: lowering (expertise): 20-35 mm; axle load to: 960 kg HA: lowering (expertise): 15-30 mm; axle load to: 800 kg
VW SANTANA (32B)				
B1	**1.3, 1.3 CX, 1.6, 1.6 D, 1.6 TD, 1.8, 1.9, 2.0, 2.1** 08/81 - 12/83 40 -85 kW	**12-116768**		VA: Thickness: 37 mm; Øi: 14 mm; with ball bearing
B1	**1.3, 1.3 CX, 1.6, 1.6 D, 1.6 TD, 1.8, 1.9, 2.0, 2.1** 08/81 - 12/83 40 -85 kW	**12-117475**		VA: Thickness: 41 mm; Øi: 14 mm
B2	**1.3, 1.6, 1.6 D, 1.6 TD, 1.8, 1.9, 2.1** 08/81 - 03/83 40 -85 kW	**16-031296** **11-101307** SP		-> CH.Nr.: 32-D-155 157 VA: Øa: 50 mm
B2	**1.3, 1.3 CX, 1.6, 1.6 D, 1.6 TD, 1.8, 1.9, 2.1** 04/83 - 12/83 40 -85 kW	**16-031296** **11-101307** SP	**15-069122** **11-101352** SP	CH.Nr.: 32-D-155 158 -> VA: Øa: 50 mm
B2	**1.6** 08/81 - 12/82 63 kW	**16-031296** **11-101307** SP		VA: Øa: 50 mm
B2	**2.0** 08/83 - 12/84 85 kW	**16-031296** **11-101307** SP	**15-069122** **11-101352** SP	VA: Øa: 50 mm
B3	**1.3, 1.3 CX, 1.6, 1.8** 08/82 - 12/84 44 -66 kW	*36-134298*	**36-131075**	with standard chassis
B3	**1.6 D, 1.6 TD, 1.9, 2.0, 2.1** 08/81 - 12/84 40 -85 kW	*36-134397*	**36-131075**	with standard chassis
B4	**1.3, 1.6, 1.6 D, 1.6 TD, 1.8, 1.9, 2.1** 08/81 - 03/83 40 -85 kW	**21-030406** **11-101307** SP	*19-019932* **11-101352** SP	-> CH.Nr.: 32-D-155 157 VA: Øa: 50 mm
B4	**1.3, 1.3 CX, 1.6, 1.6 D, 1.6 TD, 1.8, 1.9, 2.1** 04/83 - 12/83 40 -85 kW	**21-030406** **11-101307** SP	*19-019659* **11-101352** SP	CH.Nr.: 32-D-155 158 -> VA: Øa: 50 mm
B4	**1.6** 08/81 - 12/82 63 kW	**21-030406** **11-101307** SP	*19-019932* **11-101352** SP	VA: Øa: 50 mm
B4	**2.0** 08/83 - 12/84 85 kW	**21-030406** **11-101307** SP	*19-019659* **11-101352** SP	VA: Øa: 50 mm

V

VW				
VW SANTANA (32B)				
B6 Sport	**1.3, 1.3 CX, 1.6, 1.6 D, 1.6 TD, 1.8, 1.9, 2.0, 2.1** 08/81 - 12/83 40 -85 kW	**34-030059**	*24-000307* **11-101352** SP	VA: Øa: 50 mm
VW SANTANA				
B1	**1.8, 1.8 GL** 08/84 - 07/94 66 -71 kW	**12-116768**		VA: Thickness: 37 mm; Øi: 14 mm; with ball bearing
B1	**1.8, 1.8 GL** 08/84 - 07/94 66 -71 kW	**12-117475**		VA: Thickness: 41 mm; Øi: 14 mm
B2	**1.8, 1.8 GL** 08/84 - 07/94 66 -71 kW	**16-031296** **11-101307** SP	**15-069122** **11-101352** SP	VA: Øa: 50 mm
B3	**1.8, 1.8 GL** 08/84 - 07/94 66 -71 kW	*36-134298*	**36-131075**	with standard chassis
B4	**1.8, 1.8 GL** 08/84 - 07/94 66 -71 kW	**21-030406** **11-101307** SP	*19-019659* **11-101352** SP	VA: Øa: 50 mm
B6 Sport	**1.8, 1.8 GL** 08/84 - 07/94 66 -71 kW	**34-030059**	*24-000307* **11-101352** SP	VA: Øa: 50 mm
VW SANTANA				
B2	**1.8** 01/95 - 63 kW		**15-062208** **11-101352** SP	with standard chassis
B2	**1.8, 1.8 GLS, 1.8 i, 2.0 GLS** 08/94 - 66 -82 kW		**15-062208** **11-101352** SP	with standard chassis
B4	**1.8, 1.8 GLS, 1.8 i, 2.0 GLS** 08/94 - 63 -82 kW	**22-045768** **11-101291** SP	**19-019949** **11-101352** SP	with standard chassis
B6 Sport	**1.8, 1.8 GLS, 1.8 i, 2.0 GLS** 08/94 - 63 -82 kW	**22-040589** **11-101291** SP	**24-015974** **11-101352** SP	
B8	**1.8, 1.8 GLS, 1.8 i, 2.0 GLS** 08/94 - 63 -82 kW	*22-043092* **11-101291** SP	**24-026017** **11-101352** SP	
VW SANTANA Variant				
B1	**1.8** 04/85 - 02/88 66 -71 kW	**12-117475**		VA: Thickness: 41 mm; Øi: 14 mm
B1	**1.8** 04/85 - 02/88 66 -71 kW	**12-116768**		VA: Thickness: 37 mm; Øi: 14 mm; with ball bearing
B2	**1.8** 04/85 - 02/88 66 -71 kW	**16-031296** **11-101307** SP	**15-069122**	with standard chassis VA: Øa: 50 mm
B4	**1.8** 04/85 - 02/88 66 -71 kW	**21-030406** **11-101307** SP	*19-019659* **11-101352** SP	with standard chassis VA: Øa: 50 mm
B6 Sport	**1.8** 04/85 - 02/88 66 -71 kW	**34-030059**	*24-000307*	without off-road suspension VA: Øa: 50 mm
VW SANTANA Variant				
B1	**1.8** 03/88 - 07/93 66 -71 kW	**12-116775**		-> CH.Nr.: 31-P-026435 VA: Øi: 14 mm; Øa: 126 mm; Material: Rubber/Metal; with ball bearing
B1	**1.8** 03/88 - 07/96 63 -72 kW	**12-117659**		VA: with ball bearing

V

VW				
VW SANTANA Variant				
B2	**1.8** 03/88 - 07/93 66 -71 kW	**17-047166** **11-101291** SP	**15-062208** **11-101352** SP	-> CH.Nr.: 31-P-026 435; with standard chassis
B2	**1.8** 03/88 - 07/96 63 -72 kW	**17-105248** **11-101291** SP	**15-105257** **11-101352** SP	for vehicles with "Plusachse" only; with off-road suspension
B2	**1.8** 08/93 - 07/96 63 -72 kW		**15-062208** **11-101352** SP	CH.Nr.: 31-P-026 436 ->; for vehicles with "Plusachse" only; with standard chassis
B3	**1.8** 03/88 - 07/93 68 -71 kW	**36-130801**	**36-130795**	-> CH.Nr.: 31-P-026435; with standard chassis
B3	**1.8** 03/88 - 07/93 68 -71 kW		**36-130870**	-> CH.Nr.: 31-P-026435; with standard chassis; Heavy Duty Version .
B3	**1.8** 08/93 - 07/96 63 -72 kW	**36-130832**	**36-130917**	CH.Nr.: 31-P-026436 ->; with standard chassis
B4	**1.8** 03/88 - 07/93 66 -71 kW	**21-031502** **11-101291** SP	**19-019949** **11-101352** SP	-> CH.Nr.: 31-P-026 435; with standard chassis VA: for bolted struts only
B4	**1.8** 03/88 - 07/93 66 -71 kW	**22-041234** **11-101291** SP	**19-019949** **11-101352** SP	-> CH.Nr.: 31-P-026 435; with standard chassis
B4	**1.8** 03/88 - 07/96 63 -72 kW	**22-045768** **11-101291** SP	**19-019949** **11-101352** SP	for vehicles with "Plusachse" only; with standard chassis
B6 Sport	**1.8** 03/88 - 07/93 66 -71 kW	**22-004062** **11-101291** SP	**24-015974** **11-101352** SP	-> CH.Nr.: 31-P-026 435; for vehicles with "Basisachse" only
B6 Sport	**1.8** 03/88 - 07/96 63 -72 kW	**22-040589** **11-101291** SP	**24-015974** **11-101352** SP	for vehicles with "Plusachse" only
B8	**1.8** 03/88 - 07/93 66 -71 kW	**22-043085** **11-101291** SP	**24-026017** **11-101352** SP	-> CH.Nr.: 31-P-026 435; for vehicles with "Basisachse" only
B8	**1.8** 03/88 - 07/96 63 -72 kW	*22-043092* **11-101291** SP	**24-026017** **11-101352** SP	for vehicles with "Plusachse" only
VW SCIROCCO (53)				
B1	**1.1, 1.3, 1.5, 1.6** 02/74 - 07/80 37 -81 kW	**12-117369**		VA: Material: Rubber/Metal; with spacer tube
B3	**1.1, 1.3, 1.5, 1.6** 02/74 - 07/80 37 -81 kW		*36-134182*	with standard chassis
B4	**1.1, 1.3, 1.5, 1.6** 02/74 - 07/80 37 -81 kW	**i.V.** **21-030338**	**19-019550** **11-101345** SP	VA: for bolted struts only
B6 Sport	**1.1, 1.3, 1.5, 1.6** 02/74 - 07/80 37 -81 kW	**34-001370**	**24-008372**	VA: for bolted struts only
B8	**1.1, 1.3, 1.5, 1.6** 02/74 - 07/80 37 -81 kW	**34-001370**	**24-015141**	VA: for bolted struts only
B12 PK	**1.3, 1.5, 1.6** 06/76 - 07/80 44 -81 kW	**46-189868**		for bolted struts only; Conditions see certificates VA: lowering (expertise): 30-40 mm; axle load to: 785 kg HA: lowering (expertise): 30 mm; axle load to: 630 kg
VW SCIROCCO (53B)				
B1	**1.3, 1.5, 1.6, 1.8, 1.8 16V** 08/80 - 07/89 44 -102 kW	**12-117369**		VA: Material: Rubber/Metal; with spacer tube
B3	**1.3, 1.5, 1.6, 1.8, 1.8 16V** 08/80 - 07/89 44 -102 kW	**36-131105**	*36-134182*	with standard chassis

V

VW				
VW SCIROCCO (53B)				
B3	**1.3, 1.5, 1.6, 1.8, 1.8 16V** 08/80 - 07/89 44 -102 kW		**36-155095**	with standard chassis; Heavy Duty Version .
B4	**1.3, 1.5, 1.6, 1.8, 1.8 16V** 08/80 - 07/89 44 -102 kW	**21-030338**	**19-019550** **11-101345** SP	VA: for bolted struts only
B6 Sport	**1.3, 1.5, 1.6, 1.8, 1.8 16V** 08/80 - 07/89 44 -102 kW	**34-001370**	**24-008372**	VA: for bolted struts only
B8	**1.3, 1.5, 1.6, 1.8, 1.8 16V** 08/80 - 07/89 44 -102 kW	**34-001370**	**24-015141**	VA: for bolted struts only
B12 PK	**1.3, 1.5, 1.6, 1.8, 1.8 16V** 08/80 - 07/89 44 -102 kW	**46-189868**		for bolted struts only; Conditions see certificates VA: lowering (expertise): 30-40 mm; axle load to: 785 kg HA: lowering (expertise): 30 mm; axle load to: 630 kg
VW SCIROCCO (137)				
B1	**1.4 TSI, 2.0 R, 2.0 TDI, 2.0 TSI** 05/08 - 90 -195 kW	**12-224074**	**12-224081**	VA: with ball bearing HA: without ball bearing
B4	**1.4 TSI, 2.0 TDI, 2.0 TSI** 05/08 - 90 -155 kW	**22-131614**	**19-127439**	with standard chassis VA: Øa: 55 mm
B4	**1.4 TSI, 2.0 TDI, 2.0 TSI** 05/08 - 90 -155 kW	**22-139191**	**19-127439**	with sports suspension VA: Øa: 55 mm
B6 Sport	**1.4 TSI, 2.0 TDI, 2.0 TSI** 05/08 - 90 -155 kW	**35-108177**	**24-172936**	VA: Øa: 55 mm
B6 Sport	**2.0 R** 11/09 - 188 -195 kW	**35-108191**	**24-178006**	without electronic suspension control VA: Øa: 55 mm
B8	**1.4 TSI, 2.0 TDI, 2.0 TSI** 05/08 - 90 -155 kW	**35-108191**	**24-178006**	VA: Øa: 55 mm
B12 PK	**1.4 TSI, 2.0 TDI, 2.0 TSI** 05/08 - 90 -155 kW	**46-184382**		disconect DCC; outside diameter strut 55 mm; without electronic suspension control; Conditions see certificates VA: lowering (expertise): 25-30 mm; axle load to: 1050 kg HA: lowering (expertise): 20 mm; axle load to: 770 kg
B12 PK	**2.0 R** 11/09 - 188 -195 kW	**46-184382**		disconect DCC; outside diameter strut 55 mm; without electronic suspension control; Conditions see certificates VA: lowering (expertise): 15 mm; axle load to: 1050 kg HA: lowering (expertise): 10 mm; axle load to: 770 kg
B14	**1.4 TSI, 2.0 TDI, 2.0 TSI** 05/08 - 90 -155 kW	**47-158283**		disconect DCC; outside diameter strut 55 mm; without electronic suspension control; Conditions see certificates VA: lowering (expertise): 20-40 mm; axle load to: 1110 kg HA: lowering (expertise): 20-40 mm; axle load to: 800 kg
B14	**2.0 R** 11/09 - 188 -195 kW	**47-158283**		disconect DCC; outside diameter strut 55 mm; without electronic suspension control; Conditions see certificates VA: lowering (expertise): 10-30 mm; axle load to: 1110 kg HA: lowering (expertise): 10-30 mm; axle load to: 800 kg
B16 PSS10	**1.4 TSI, 2.0 TDI, 2.0 TSI** 05/08 - 90 -155 kW	**48-158176**		disconect DCC; outside diameter strut 55 mm; without electronic suspension control; Conditions see certificates VA: lowering (expertise): 20-40 mm; axle load to: 1110 kg HA: lowering (expertise): 20-40 mm; axle load to: 800 kg
B16 PSS10	**2.0 R** 11/09 - 188 -195 kW	**48-158176**		disconect DCC; outside diameter strut 55 mm; without electronic suspension control; Conditions see certificates VA: lowering (expertise): 10-30 mm; axle load to: 1110 kg HA: lowering (expertise): 10-30 mm; axle load to: 800 kg
B16 RC	**1.4 TSI, 2.0 TDI, 2.0 TSI** 05/08 - 90 -155 kW	**49-196849**		Øa: 55 mm; disconect DCC; without electronic suspension control; mark: G07, G08, G09, G11; Conditions see certificates VA: lowering (expertise): 20-40 mm; axle load to: 1110 kg HA: lowering (expertise): 20-40 mm; axle load to: 1040 kg
B16 RC	**2.0 R** 11/09 - 188 -195 kW	**49-196849**		Øa: 55 mm; disconect DCC; without electronic suspension control; mark: G07, G08, G09, G11; Conditions see certificates VA: lowering (expertise): 10-30 mm; axle load to: 1140 kg HA: lowering (expertise): 10-30 mm; axle load to: 1040 kg

V

VW

VW SCIROCCO (137)

B16 BCS	**2.0 R** 11/09 - 188 -195 kW	**48-215909**		disconect DCC; outside diameter strut 55 mm; Conditions see certificates VA: lowering (expertise): 20-30 mm; axle load to: 1140 kg HA: lowering (expertise): 10-30 mm; axle load to: 1040 kg
B16 BCS	**2.0 TDI, 2.0 TSI** 05/08 - 125 -155 kW	**48-215909**		disconect DCC; outside diameter strut 55 mm; Conditions see certificates VA: lowering (expertise): 30-40 mm; axle load to: 1140 kg HA: lowering (expertise): 20-40 mm; axle load to: 1040 kg

VW SHARAN (7M8, 7M9, 7M6)

B1	**1.8 T 20V, 1.9 TDI, 1.9 TDI 4motion, 2.0, 2.0 CL, 2.0 TDI, 2.8 V6 24V, 2.8 V6 24V 4motion, 2.8 VR6, 2.8 VR6 Syncro** 11/96 - 03/10 66 -150 kW	**12-117659**		VA: with ball bearing
B3	**1.8 T 20V, 1.9 TDI, 2.0, 2.0 CL** 09/95 - 03/10 66 -110 kW	**37-134051**	**38-131257**	with standard chassis
B3	**1.8 T 20V, 1.9 TDI, 2.0, 2.0 CL** 09/95 - 03/10 66 -110 kW	**37-134327**	**38-131264**	with standard chassis; Heavy Duty Version .
B3	**1.9 TDI 4motion, 2.8 V6 24V 4motion, 2.8 VR6 Syncro** 11/96 - 03/10 85 -150 kW	**37-134457**	**38-131271**	with standard chassis
B3	**2.0 TDI, 2.8 V6 24V, 2.8 VR6** 09/95 - 03/10 103 -150 kW	**37-134327**	**38-131264**	with standard chassis
B3	**2.0 TDI, 2.8 V6 24V, 2.8 VR6** 09/95 - 03/10 103 -150 kW	**37-134457**	**38-131271**	with standard chassis; Heavy Duty Version .
B4	**1.8 T 20V, 1.9 TDI, 2.0, 2.0 CL, 2.0 TDI, 2.8 V6 24V, 2.8 VR6** 09/95 - 03/10 66 -150 kW	**22-046796**	**19-061078** OIO	with standard chassis
B4	**1.9 TDI 4motion, 2.8 V6 24V 4motion, 2.8 VR6 Syncro** 11/96 - 03/10 85 -150 kW	**22-046796**	**19-061078** OIO	
B6 Sport	**1.8 T 20V, 1.9 TDI, 1.9 TDI 4motion, 2.0, 2.0 CL, 2.0 TDI, 2.8 V6 24V, 2.8 V6 24V 4motion, 2.8 VR6, 2.8 VR6 Syncro** 11/96 - 03/10 66 -150 kW	**35-103509**	**24-103527** OIO	with standard chassis
B8	**1.8 T 20V, 1.9 TDI, 1.9 TDI 4motion, 2.0, 2.0 CL, 2.0 TDI, 2.8 V6 24V, 2.8 V6 24V 4motion, 2.8 VR6, 2.8 VR6 Syncro** 11/96 - 03/10 66 -150 kW	**35-103516**	**24-103534** OIO	with sports suspension
B12 PK	**1.8 T 20V, 2.0, 2.0 CL** 09/95 - 03/10 85 -110 kW	**46-192172**		Conditions see certificates VA: lowering (expertise): 30 mm; axle load to: 1240 kg HA: lowering (expertise): 30 mm; axle load to: 1355 kg
B12 PK	**1.9 TDI, 2.0 TDI, 2.8 V6 24V, 2.8 VR6** 09/95 - 03/10 66 -150 kW	**46-192165**		Conditions see certificates VA: lowering (expertise): 30 mm; axle load to: 1260 kg HA: lowering (expertise): 30 mm; axle load to: 1355 kg

VW SHARAN (7N)

B1	**1.4 TSI, 2.0 TDI, 2.0 TDI 4motion, 2.0 TSI** 05/10 - 85 -147 kW	**12-226580**	**12-226535**	HA: for PR number: F4E/F4F/F5Z; for PR number: 1JA/1JC
B4	**1.4 TSI, 2.0 TDI, 2.0 TDI 4motion, 2.0 TSI** 05/10 - 85 -147 kW	**22-196859**	**19-196862**	with standard chassis; without electronic suspension control HA: without ride height adjustment
B6 Sport	**1.4 TSI, 2.0 TDI, 2.0 TDI 4motion, 2.0 TSI** 05/10 - 85 -147 kW	**35-108177**	**24-172936**	without electronic suspension control VA: Øa: 55 mm HA: without ride height adjustment

V

VW				
VW TARO				
B6 Offroad	**2.4 D 4x4, 2.4 i 4x4** 06/89 - 03/97 58 -84 kW	**24-014687**	**24-021289** **24-026758**	
VW TIGUAN (5N_)				
B1	**1.4 TSI, 1.4 TSI FWD, 2.0 TDI, 2.0 TDI 4motion, 2.0 TDI FWD, 2.0 TFSI** 09/07 - 81 -147 kW	**12-224074**	**12-224081**	VA: with ball bearing HA: without ball bearing
B4	**1.4 TSI, 1.4 TSI FWD, 2.0 TDI, 2.0 TDI 4motion, 2.0 TDI FWD, 2.0 TFSI** 09/07 - 81 -147 kW	**22-183750**	**19-170732**	with standard chassis; without electronic suspension control
B6 Offroad	**1.4 TSI, 1.4 TSI FWD, 2.0 TDI, 2.0 TDI 4motion, 2.0 TDI FWD, 2.0 TFSI** 09/07 - 81 -147 kW	**35-108177**	**24-146944**	without electronic suspension control VA: Øa: 55 mm
VW TOUAREG (7LA, 7L6, 7L7)				
B3	**2.5 R5 TDI, 3.2 V6** 10/02 - 05/10 120 -177 kW	**36-199358**	**36-199372**	with standard chassis
B3	**2.5 R5 TDI, 3.0 TDI, 3.0 V6 TDI, 3.2 V6, 3.6 V6 FSI, 4.2 V8, 4.2 V8 FSI** 12/02 - 05/10 120 -257 kW		**36-199389**	with standard chassis; Heavy Duty Version .
B3	**3.0 TDI, 3.0 V6 TDI, 3.6 V6 FSI, 4.2 V8, 4.2 V8 FSI** 12/02 - 05/10 155 -257 kW	**36-199365**	**36-199372**	with standard chassis
B4	**2.5 R5 TDI, 3.0 TDI, 3.0 V6 TDI, 3.2 V6, 3.6 V6 FSI, 4.2 V8, 4.2 V8 FSI, 5.0 R50 TDI, 5.0 V10 TDI, 6.0 W12** 10/02 - 05/10 120 -331 kW	**i.V.** **i.V.**	**19-194486**	with standard chassis; without pneumatic suspension
B6 Offroad	**2.5 R5 TDI, 3.0 TDI, 3.0 V6 TDI, 3.2 V6, 3.6 V6 FSI, 4.2 V8, 4.2 V8 FSI, 5.0 R50 TDI, 5.0 V10 TDI, 6.0 W12** 10/02 - 12/09 120 -331 kW	**35-110552** **35-110569**	**24-110570**	-> CH.Nr.: 7L-9-045000; without pneumatic suspension
B8	**2.5 R5 TDI, 3.0 TDI, 3.0 V6 TDI, 3.2 V6, 3.6 V6 FSI, 4.2 V8, 4.2 V8 FSI, 5.0 R50 TDI, 5.0 V10 TDI, 6.0 W12** 10/02 - CH-Nr. 120 -331 kW	**35-110583** **35-110590**	**24-110600**	-> CH.Nr.: 7L-9-045000; without pneumatic suspension
B12 PK	**2.5 R5 TDI, 3.0 TDI, 3.0 V6 TDI, 3.2 V6, 3.6 V6 FSI, 4.2 V8, 4.2 V8 FSI** 12/02 - CH-Nr. 128 -257 kW	**46-187901**		-> CH.Nr.: 7L-9-045000; without ride height adjustment; Conditions see certificates; without pneumatic suspension VA: lowering (expertise): 30 mm; axle load to: 1510 kg HA: lowering (expertise): 30 mm; axle load to: 1670 kg
VW TOUAREG (7P5)				
B3	**3.0 V6 TDI, 3.0 V6 TSI Hybrid, 3.6 V6 FSI** 01/10 - 150 -245 kW	**i.V**		VA: with standard chassis
B4	**3.0 V6 TDI, 3.0 V6 TSI, 3.0 V6 TSI Hybrid, 3.6 V6 FSI, 4.2 V8 FSI, 4.2 V8 TDI** 01/10 - 150 -265 kW	**19-189666** **19-189673**	**19-189680**	with standard chassis; without electronic suspension control; without pneumatic suspension
B4	**3.0 V6 TDI, 3.0 V6 TSI, 3.0 V6 TSI Hybrid, 3.6 V6 FSI, 4.2 V8 FSI, 4.2 V8 TDI** 01/10 - 150 -265 kW	**19-189697** **19-189703**	**19-189710**	with sports suspension; with off-road suspension; without electronic suspension control; without pneumatic suspension
B6 Offroad	**3.0 V6 TDI, 3.0 V6 TSI, 3.0 V6 TSI Hybrid, 3.6 V6 FSI, 4.2 V8 FSI, 4.2 V8 TDI** 01/10 - 150 -265 kW	**24-197069** **24-197076**	**24-197083**	without electronic suspension control; without pneumatic suspension

V

VW

VW TOURAN (1T1, 1T2, 1T3)

B1	**1.2 TSI, 1.4 Fsi, 1.4 TSI, 1.4 TSI EcoFuel, 1.6, 1.6 FSI, 1.6 TDI, 1.9 TDI, 2.0 EcoFuel, 2.0 FSI, 2.0 TDI, 2.0 TDI 16V** 08/03 - 66 -125 kW	**12-224074**		VA: with ball bearing
B3	**1.4 Fsi, 1.4 TSI, 1.4 TSI EcoFuel, 1.6, 1.6 FSI, 1.6 TDI** 02/03 - 66 -125 kW	**37-148140**		with standard chassis
B3	**1.4 Fsi, 1.4 TSI, 1.4 TSI EcoFuel, 1.6, 1.6 FSI, 1.6 TDI** 02/03 - 66 -125 kW	**36-202287**		with standard chassis; Heavy Duty Version .
B3	**2.0 FSI, 2.0 TDI, 2.0 TDI 16V** 08/03 - 81 -125 kW	**36-202287**	**36-148257**	with standard chassis
B3	**1.9 TDI** 08/03 - 66 -77 kW	**36-202287**	**36-148240**	with standard chassis
B3	**1.9 TDI** 08/03 - 66 -77 kW		**36-148257**	with standard chassis; Heavy Duty Version .
B4	**1.2 TSI, 1.4 Fsi, 1.4 TSI, 1.4 TSI EcoFuel, 1.6, 1.6 FSI, 1.6 TDI, 1.9 TDI, 2.0 EcoFuel, 2.0 FSI, 2.0 TDI, 2.0 TDI 16V** 08/03 - 66 -125 kW	**22-139320**	**19-139333**	with standard chassis; with sports suspension; without electronic suspension control VA: Øa: 55 mm; mark: G07
B6 Sport	**1.2 TSI, 1.4 Fsi, 1.4 TSI, 1.4 TSI EcoFuel, 1.6, 1.6 FSI, 1.6 TDI, 1.9 TDI, 2.0 EcoFuel, 2.0 FSI, 2.0 TDI, 2.0 TDI 16V** 08/03 - 66 -125 kW	**35-108177**	**24-172936**	with standard chassis; without electronic suspension control VA: Øa: 55 mm
B8	**1.2 TSI, 1.4 Fsi, 1.4 TSI, 1.4 TSI EcoFuel, 1.6, 1.6 FSI, 1.6 TDI, 1.9 TDI, 2.0 EcoFuel, 2.0 FSI, 2.0 TDI, 2.0 TDI 16V** 08/03 - 66 -125 kW	**35-108191**	**24-178006**	with sports suspension; without electronic suspension control VA: Øa: 55 mm
B12 PK	**1.9 TDI** 08/03 - 66 -77 kW	**46-184009**		Conditions see certificates; manual transmission VA: lowering (expertise): 30 mm; axle load to: 1160 kg HA: without ride height adjustment; lowering (expertise): 30 mm; axle load to: 1190 kg
B12 PK	**1.9 TDI** 08/03 - 66 -77 kW	**46-184016**		Conditions see certificates; automatic transmission VA: lowering (expertise): 30 mm; axle load to: 1200 kg HA: without ride height adjustment; lowering (expertise): 30 mm; axle load to: 1190 kg
B12 PK	**2.0 TDI, 2.0 TDI 16V** 08/03 - 81 -125 kW	**46-184016**		Conditions see certificates VA: lowering (expertise): 30 mm; axle load to: 1200 kg HA: without ride height adjustment; lowering (expertise): 30 mm; axle load to: 1190 kg
B14	**1.2 TSI, 1.4 Fsi, 1.4 TSI, 1.4 TSI EcoFuel, 1.6, 1.6 FSI, 1.6 TDI, 1.9 TDI, 2.0 EcoFuel, 2.0 FSI, 2.0 TDI, 2.0 TDI 16V** 08/03 - 66 -125 kW	**47-127708**		outside diameter strut 55 mm; without electronic suspension control; Conditions see certificates VA: lowering (expertise): 30-50 mm; axle load to: 1210 kg HA: lowering (expertise): 30-50 mm; axle load to: 1250 kg
B16 PSS10	**1.2 TSI, 1.4 Fsi, 1.4 TSI, 1.4 TSI EcoFuel, 1.6, 1.6 FSI, 1.6 TDI, 1.9 TDI, 2.0 EcoFuel, 2.0 FSI, 2.0 TDI, 2.0 TDI 16V** 08/03 - 66 -125 kW	**48-135245**		outside diameter strut 55 mm; without electronic suspension control; Conditions see certificates VA: lowering (expertise): 30-50 mm; axle load to: 1210 kg HA: lowering (expertise): 30-50 mm; axle load to: 1250 kg
B16 RC	**1.2 TSI, 1.4 Fsi, 1.4 TSI, 1.4 TSI EcoFuel, 1.6, 1.6 FSI, 1.6 TDI, 1.9 TDI, 2.0 EcoFuel, 2.0 FSI, 2.0 TDI, 2.0 TDI 16V** 08/03 - 66 -125 kW	**49-196849**		Øa: 55 mm; disconect DCC; without electronic suspension control; mark: G07, G08, G09, G11; Conditions see certificates VA: lowering (expertise): 20-40 mm; axle load to: 1140 kg HA: lowering (expertise): 20-40 mm; axle load to: 1040 kg

V

VW				
VW VENTO (1H2)				
B1	**1.4, 1.6, 1.8, 1.9 D, 1.9 TD, 1.9 TDI, 2.0, 2.0 GL, 2.8 VR6** 11/91 - CH-Nr. 40 -128 kW	**12-116775**	**12-117239**	-> CH.Nr.: 1-H-SW026538 VA: Øi: 14 mm; Øa: 126 mm; Material: Rubber/Metal; with ball bearing
B1	**1.4, 1.6, 1.8, 1.9 D, 1.9 TD, 1.9 TDI, 2.0, 2.0 GL, 2.8 VR6** CH-Nr. - 09/98 40 -128 kW	**12-117659**	**12-117239**	CH.Nr.: 1-H-SW026539 -> VA: with ball bearing
B1	**1.9 SDI** 04/97 - 09/98 47 kW	**12-117659**		VA: with ball bearing
B2	**1.4, 1.6** 11/91 - 08/94 40 -55 kW	**17-047142** **11-101291** SP	**15-062192** **11-101352** SP	with standard chassis
B2	**1.4, 1.6** 09/94 - 09/98 40 -74 kW	**17-104029** **11-101291** SP	**15-062192** **11-101352** SP	with standard chassis
B2	**1.4, 1.6, 1.8, 1.9 D, 1.9 SDI, 1.9 TD, 1.9 TDI, 2.0, 2.0 GL** 09/94 - 09/98 40 -85 kW	**17-107150** **11-101291** SP		with off-road suspension
B2	**1.8, 1.9 D, 1.9 TD, 1.9 TDI, 2.0, 2.0 GL** 11/91 - 08/94 48 -85 kW	**17-047142** **11-101291** SP	**15-062192** **11-101352** SP	equipment: ex. GT
B2	**1.8, 1.9 D, 1.9 SDI, 1.9 TD, 1.9 TDI, 2.0, 2.0 GL** 09/94 - 09/98 47 -85 kW	**17-104029** **11-101291** SP	**15-062192** **11-101352** SP	equipment: ex. GT
B3	**1.4** 11/91 - 08/94 40 -44 kW	**36-131112**	**36-131136**	with standard chassis
B3	**1.6** 09/93 - 09/98 55 -74 kW	**37-131333**	**36-131136**	with standard chassis
B3	**1.8** 11/91 - 08/94 55 -66 kW	**36-130818**	**36-131136**	with standard chassis
B3	**1.8** 09/94 - 09/98 55 -66 kW	**37-131333**	**36-131136**	with standard chassis
B3	**2.0, 2.0 GL** 11/91 - 09/93 62 -85 kW	**36-130825**	**36-131143**	with standard chassis
B3	**2.0, 2.0 GL** 09/93 - 09/98 62 -85 kW	**37-134211**	**36-131143**	with standard chassis
B3	**2.8 VR6** 01/92 - 08/94 128 kW		**36-131143**	with standard chassis
B3	**2.8 VR6** 09/94 - 09/98 120 -128 kW	**37-134228**	**36-131143**	with standard chassis
B3	**1.9 SDI, 1.9 TD, 1.9 TDI** 09/93 - 09/98 47 -81 kW	**37-131333**	**36-131136**	with standard chassis
B3	**1.9 D** 11/91 - 09/94 48 kW	**36-130818**	**36-131136**	with standard chassis
B3	**1.9 D** 09/94 - 09/98 48 kW	**37-131333**	**36-131136**	with standard chassis
B3	**1.9 TD** 11/91 - 09/94 55 kW	**36-130818**	**36-131136**	with standard chassis
B4	**1.4, 1.6** 11/91 - 08/94 40 -55 kW	**22-041142** **11-101291** SP	**19-019741** **11-101352** SP	with standard chassis
B4	**1.4, 1.6, 1.8, 1.9 D, 1.9 SDI, 1.9 TD, 1.9 TDI, 2.0, 2.0 GL** 11/91 - 09/98 40 -85 kW	**22-045027** **11-101291** SP	**19-124681** **11-101352** SP	for vehicles with "Plusachse" only; with off-road suspension

VW

VW VENTO (1H2)

B4	**1.4, 1.6** 09/94 - 09/98 40 -74 kW	**22-045010** **11-101291** SP	**19-019741** **11-101352** SP	with standard chassis
B4	**1.8, 1.9 D, 1.9 SDI, 1.9 TD, 1.9 TDI, 2.0, 2.0 GL** 11/91 - 09/98 47 -85 kW	**22-045010** **11-101291** SP	**19-019741** **11-101352** SP	for vehicles with "Plusachse" only; with standard chassis; equipment: ex. GT
B4	**1.8, 1.9 TD, 2.0, 2.0 GL** 11/91 - 09/98 55 -85 kW	**22-045010** **11-101291** SP	**19-019963** **11-101352** SP	for vehicles with "Plusachse" only; with sports suspension; equipment: GT
B6 Sport	**1.4, 1.6, 1.8, 1.9 D, 1.9 SDI, 1.9 TD, 1.9 TDI, 2.0, 2.0 GL, 2.8 VR6** 11/91 - 09/98 40 -128 kW	*22-181657* **11-101291** SP	**24-015240** **11-101352** SP	for vehicles with "Basisachse" only VA: twin-tube
B6 Sport	**1.4, 1.6, 1.8, 1.9 D, 1.9 SDI, 1.9 TD, 1.9 TDI, 2.0, 2.0 GL, 2.8 VR6** 11/91 - 09/98 40 -128 kW	**35-043959**	**24-015240** **11-101352** SP	for vehicles with "Basisachse" only VA: mono-tube
B6 Sport	**1.4, 1.6, 1.8, 1.9 D, 1.9 SDI, 1.9 TD, 1.9 TDI, 2.0, 2.0 GL, 2.8 VR6** 11/91 - 09/98 40 -128 kW	**35-043911**	**24-015240** **11-101352** SP	for vehicles with "Plusachse" only VA: mono-tube
B6 Sport	**1.4, 1.6, 1.8, 1.9 D, 1.9 SDI, 1.9 TD, 1.9 TDI, 2.0, 2.0 GL, 2.8 VR6** 11/91 - 09/98 40 -128 kW	**35-043911** **11-101291** SP	**24-015240** **11-101352** SP	for vehicles with "Plusachse" only VA: twin-tube
B8	**1.4, 1.6, 1.8, 1.9 D, 1.9 SDI, 1.9 TD, 1.9 TDI, 2.0, 2.0 GL, 2.8 VR6** 11/91 - 09/98 40 -128 kW	*22-003737* **11-101291** SP	**24-015295** **11-101352** SP	for vehicles with "Basisachse" only VA: twin-tube
B8	**1.4, 1.6, 1.8, 1.9 D, 1.9 SDI, 1.9 TD, 1.9 TDI, 2.0, 2.0 GL, 2.8 VR6** 11/91 - 09/98 40 -128 kW	**35-043966**	**24-015295** **11-101352** SP	for vehicles with "Basisachse" only VA: mono-tube
B8	**1.4, 1.6, 1.8, 1.9 D, 1.9 SDI, 1.9 TD, 1.9 TDI, 2.0, 2.0 GL, 2.8 VR6** 11/91 - 09/98 40 -128 kW	**35-043928**	**24-015295** **11-101352** SP	for vehicles with "Plusachse" only VA: mono-tube
B10	**1.4, 1.6, 1.8** 11/91 - 09/98 40 -74 kW	**46-112279**		for vehicles with "Basisachse" only; Conditions see certificates VA: lowering (expertise): 60 mm; Only in connection with 1H0 412 341 HA: lowering (expertise): 40 mm
B10	**1.9 D, 1.9 SDI, 1.9 TD, 1.9 TDI** 11/91 - 09/98 47 -81 kW	**46-113221**		for vehicles with "Basisachse" only; Conditions see certificates VA: lowering (expertise): 60 mm; Only in connection with 1H0 412 341 HA: lowering (expertise): 40 mm
B12 PK	**1.4, 1.6, 1.8, 1.9 D, 1.9 TD, 1.9 TDI, 2.0, 2.0 GL, 2.8 VR6** 11/91 - 08/94 40 -128 kW	**46-189981**		for vehicles with "Basisachse" only; Conditions see certificates VA: lowering (expertise): 30 mm; axle load to: 980 kg HA: lowering (expertise): 30 mm; axle load to: 840 kg
B12 PK	**1.4, 1.6, 1.8, 1.9 D, 1.9 TD, 1.9 TDI, 2.0, 2.0 GL, 2.8 VR6** CH-Nr. - 09/98 40 -128 kW	**46-190000**		CH.Nr.: 199409 ->; for vehicles with "Plusachse" only; Conditions see certificates VA: lowering (expertise): 30 mm; axle load to: 980 kg HA: lowering (expertise): 30 mm; axle load to: 840 kg
B12 SL	**1.4, 1.6, 1.8, 2.0, 2.0 GL** 11/91 - 09/98 40 -85 kW	**46-190048**		for vehicles with "Basisachse" only; Conditions see certificates VA: lowering (expertise): 45-50 mm; axle load to: 860 kg HA: lowering (expertise): 30-35 mm; axle load to: 840 kg
B12 SL	**1.4, 1.6, 1.8, 1.9 D, 1.9 SDI, 1.9 TD, 1.9 TDI, 2.0, 2.0 GL, 2.8 VR6** 11/91 - 09/98 40 -128 kW	**46-190017**		for vehicles with "Basisachse" only; Conditions see certificates VA: lowering (expertise): 45-50 mm; axle load to: 950 kg HA: lowering (expertise): 30-35 mm; axle load to: 840 kg
B12 SL	**1.4, 1.6, 1.8, 1.9 D, 1.9 SDI, 1.9 TD, 1.9 TDI, 2.0, 2.0 GL, 2.8 VR6** 11/91 - 09/98 40 -128 kW	**46-190024**		for vehicles with "Plusachse" only; Conditions see certificates VA: lowering (expertise): 45-50 mm; axle load to: 950 kg HA: lowering (expertise): 30-35 mm; axle load to: 840 kg
B14	**1.4, 1.6, 1.8, 1.9 D, 1.9 SDI, 1.9 TD, 1.9 TDI, 2.0, 2.0 GL, 2.8 VR6** 11/91 - 09/98 40 -128 kW	**47-124844**		Spacers required for several wheel/tyre combinations; Conditions see certificates VA: lowering (expertise): 30-50 mm; axle load to: 980 kg HA: lowering (expertise): 10-30 mm; axle load to: 840 kg

V

VW

VW VENTO (1H2)

B16 PSS9	**1.4, 1.6, 1.8, 1.9 D, 1.9 SDI, 1.9 TD, 1.9 TDI, 2.0, 2.0 GL, 2.8 VR6** 11/91 - 09/98 40 -128 kW	**48-080569**		Spacers required for several wheel/tyre combinations; Conditions see certificates VA: lowering (expertise): 30-50 mm; axle load to: 980 kg HA: lowering (expertise): 10-30 mm; axle load to: 840 kg
MS	**2.0, 2.8 VR6** 11/91 - 09/98 85 -128 kW	*35-044062*	*24-224024* OIO	HA: charakteristic: 300/120; with unibal joint bearing

VW 411,412

B6 Sport	**1.7, 1.8** 07/68 - 03/75 50 -63 kW	*34-000311*		VA: Quick Repair Service .; Used part return required .

VW 412 Variant

B6 Sport	**1.7, 1.8 E,LE** 01/72 - 03/75 55 -63 kW	*34-000311*		VA: Quick Repair Service .; Used part return required .

VW 1500,1600 Hatchback (31)

B6 Sport	**1.5 L, 1.6 TL** 07/68 - 07/73 33 -40 kW	**24-632188** OIO	**24-006347** OIO	with double wishbone axle
B6 Sport	**1.6 TL** 01/64 - 01/68 40 kW	**24-632188** OIO	**24-000321** OIO	swing axle HA: charakteristic: 280/100

VW 1500,1600 (31)

B6 Sport	**1.5, 1.5 S, 1.6, 1.6 L, 1.6 TL** 01/64 - 01/68 33 -40 kW	**24-632188** OIO	**24-000321** OIO	swing axle HA: charakteristic: 280/100
B6 Sport	**1.5, 1.6, 1.6 L, 1.6 TL** 07/68 - 07/73 33 -40 kW	**24-632188** OIO	**24-006347** OIO	with double wishbone axle

VW 1500,1600 Variant (36)

B6 Sport	**1.5, 1.5 S, 1.6 L** 01/64 - 01/68 33 -40 kW	**24-632188** OIO	**24-000321** OIO	swing axle HA: charakteristic: 280/100
B6 Sport	**1.5, 1.6 L** 07/68 - 07/73 33 -40 kW	**24-632188** OIO	**24-006347** OIO	with double wishbone axle

VW CRAFTER 30-35 Bus (2E)

B1	**2.5 TDI** 04/06 - 65 -120 kW	**12-224265**		VA: without ball bearing
B4	**2.5 TDI** 04/06 - 65 -120 kW	**22-184238**	**19-171579** OIO	with standard chassis; mark: 30-35
B4	**2.5 TDI** 04/06 - 65 -120 kW	**22-184245**	**19-169279** OIO	Heavy Duty Version .; mark: 30-35

VW CRAFTER 30-50 Box (2E)

B1	**2.5 TDI** 04/06 - 65 -120 kW	**12-224265**		VA: without ball bearing
B4	**2.5 TDI** 04/06 - 65 -120 kW	**22-184238**	**19-171579** OIO	with standard chassis; mark: 30-35
B4	**2.5 TDI** 04/06 - 65 -120 kW	**22-184245**	**19-169279** OIO	Heavy Duty Version .; mark: 30-35
B4	**2.5 TDI** 04/06 - 65 -120 kW	**22-184245**	**19-169163** OIO	with standard chassis; mark: 30-50

V

VW				
VW CRAFTER 30-50 Flatbed / Chassis (2E)				
B1	**2.5 TDI** 04/06 - 65 -120 kW	**12-224265**		VA: without ball bearing
B4	**2.5 TDI** 04/06 - 65 -120 kW	**22-184238**	**19-171579** OIO	with standard chassis; mark: 30-35
B4	**2.5 TDI** 04/06 - 65 -120 kW	**22-184245**	**19-169279** OIO	Heavy Duty Version .; mark: 30-35
B4	**2.5 TDI** 04/06 - 65 -120 kW	**22-184245**	**19-169163** OIO	with standard chassis; mark: 30-50
VW LT 28-35 I Bus (281-363)				
B2	**2.0, 2.4 D** 04/75 - 11/82 55 kW		**15-100078** OIO	
B2	**2.4, 2.4 D, 2.4 i, 2.4 TD** 12/82 - 06/96 51 -75 kW		**15-107282** OIO	
B2	**2.4 D** 12/82 - 07/92 55 kW		**15-107282** OIO	
B3	**2.0, 2.4, 2.4 D, 2.4 i, 2.4 TD** 04/75 - 07/89 51 -75 kW	**36-155125**		with standard chassis
B3	**2.0, 2.4, 2.4 D, 2.4 i, 2.4 TD** 04/75 - 07/89 51 -75 kW	**36-131310**		with standard chassis; Heavy Duty Version .
B3	**2.0, 2.4, 2.4 D, 2.4 i, 2.4 TD** 04/75 - 07/89 51 -75 kW	**36-155118**		with standard chassis; mark: Komfort
B4	**2.4, 2.4 D, 2.4 i, 2.4 TD** 01/79 - 06/96 51 -75 kW		**19-104300** OIO	
VW LT 28-35 I Box (281-363)				
B2	**2.0, 2.4 D, 2.7 D** 04/75 - 11/82 48 -55 kW		**15-100078** OIO	
B2	**2.4, 2.4 D, 2.4 i, 2.4 TD** 12/82 - 08/92 51 -75 kW		**15-107282** OIO	
B2	**2.4 D** 12/82 - 07/92 55 kW		**15-107282** OIO	
B3	**2.0, 2.4, 2.4 D, 2.4 i, 2.4 TD, 2.7 D** 04/75 - 08/92 48 -75 kW	**36-155125**		with standard chassis
B3	**2.0, 2.4, 2.4 D, 2.4 i, 2.4 TD, 2.7 D** 04/75 - 08/92 48 -75 kW	**36-131310**		with standard chassis; Heavy Duty Version .
B3	**2.0, 2.4, 2.4 D, 2.4 i, 2.4 TD, 2.7 D** 04/75 - 08/92 48 -75 kW	**36-155118**		with standard chassis; mark: Komfort
B4	**2.4, 2.4 D, 2.4 i, 2.4 TD** 12/82 - 08/92 51 -75 kW		**19-104300** OIO	
VW LT 28-35 I Flatbed / Chassis (281-363)				
B2	**2.0, 2.4 D, 2.7 D** 04/75 - 11/82 48 -55 kW		**15-100078** OIO	
B2	**2.0, 2.4, 2.4 D, 2.4 i, 2.4 TD** 12/82 - 09/93 51 -75 kW		**15-107282** OIO	
B3	**2.0, 2.4, 2.4 D, 2.4 i, 2.4 TD, 2.7 D** 04/75 - 09/93 48 -75 kW	**36-155125**		with standard chassis

V

VW				
VW LT 28-35 I Flatbed / Chassis (281-363)				
B3	**2.0, 2.4, 2.4 D, 2.4 i, 2.4 TD, 2.7 D** 04/75 - 09/93 48 -75 kW	**36-131310**		with standard chassis; Heavy Duty Version .
B3	**2.0, 2.4, 2.4 D, 2.4 i, 2.4 TD, 2.7 D** 04/75 - 09/93 48 -75 kW	**36-155118**		with standard chassis; mark: Komfort
B4	**2.4, 2.4 D, 2.4 i, 2.4 TD** 12/82 - 09/93 51 -75 kW		**19-104300** OIO	
VW LT 40-55 I Box (291-512)				
B2	**2.0, 2.4 D** 04/75 - 11/82 55 kW		**15-100078** OIO	
B2	**2.0, 2.4 D** 12/82 - 07/92 55 kW			
B2	**2.4, 2.4 D, 2.4 i, 2.4 TD** 12/82 - 08/92 51 -75 kW			
B3	**2.0, 2.4, 2.4 D, 2.4 i, 2.4 TD, 2.0, 2.4, 2.4 D, 2.4 i, 2.4 TD** 04/75 - 09/93 51 -75 kW	**36-155118**		with standard chassis
VW LT 40-55 I Flatbed / Chassis (293-909)				
B2	**2.0, 2.4 D** 04/75 - 12/82 55 kW		**15-100078** OIO	
B2	**2.0, 2.4, 2.4 D, 2.4 TD** 12/82 - 09/93 55 -75 kW			
B2	**2.4 D, 2.4 i, 2.4 TD** 08/90 - 06/96 51 -70 kW			
VW LT 28-35 II Bus (2DM)				
B1	**2.3, 2.5 SDI, 2.5 TDI, 2.8 TDi** 05/96 - 07/06 55 -116 kW	**12-224104**		VA: with ball bearing
B3	**2.3, 2.5 SDI, 2.5 TDI, 2.8 TDi, 2.3, 2.5 SDI, 2.5 TDI, 2.8 TDI, 2.3, 2.5 SDI, 2.5 TDI, 2.8 TDI** 05/96 - 07/06 55 -116 kW	**39-207999**	**39-208002**	with standard chassis; To Payload 2500 kg
B3	**2.3, 2.5 SDI, 2.5 TDI, 2.8 TDi, 2.3, 2.5 SDI, 2.5 TDI, 2.8 TDI, 2.3, 2.5 SDI, 2.5 TDI, 2.8 TDI** 05/96 - 07/06 55 -116 kW	**39-208088**	**39-208071**	with standard chassis; To Payload 2800 kg
B3	**2.3, 2.5 SDI, 2.5 TDI, 2.8 TDi, 2.3, 2.5 SDI, 2.5 TDI, 2.8 TDI, 2.3, 2.5 SDI, 2.5 TDI, 2.8 TDI** 05/96 - 07/06 55 -116 kW	**39-208088**	**39-203359**	with standard chassis; To Payload 2950 kg
B4	**2.3, 2.5 SDI, 2.5 TDI, 2.8 TDi** 05/96 - 07/06 55 -116 kW	**22-214751**	**19-100180** OIO	with standard chassis
VW LT 28-46 II Box (2DX0AE)				
B1	**2.3, 2.5 SDI, 2.5 TDI, 2.8 TDI** 05/96 - 07/06 55 -116 kW	**12-224104**		VA: with ball bearing
B4	**2.3, 2.5 SDI, 2.5 TDI, 2.8 TDI** 05/96 - 07/06 55 -116 kW	**22-214751**	**19-100180** OIO	with standard chassis; mark: LT28, LT35
B4	**2.3, 2.5 SDI, 2.5 TDI, 2.8 TDI** 05/96 - 07/06 55 -116 kW	**22-214768**	**19-167985** OIO	with standard chassis; mark: LT 46

V

VW

VW LT 28-46 II Flatbed / Chassis (2DX0FE)

B1	**2.3, 2.5 SDI, 2.5 TDI, 2.8 TDI** 06/96 - 07/06 55 -116 kW	**12-224104**		VA: with ball bearing
B4	**2.3, 2.5 SDI, 2.5 TDI, 2.8 TDI** 06/96 - 07/06 55 -116 kW	**22-214751**	**19-100180** OIO	with standard chassis; mark: LT28, LT35
B4	**2.3, 2.5 SDI, 2.5 TDI, 2.8 TDI** 06/96 - 07/06 55 -116 kW	**22-214768**	**19-167985** OIO	with standard chassis; mark: LT 46

VW TRANSPORTER I Bus (22, 24, 25, 28)

B6 Sport	**1.1, 1.2, 1.5, 1.6** 01/55 - 07/67 18 -35 kW		**24-000321** OIO	HA: charakteristic: 280/100

VW TRANSPORTER I Box (21, 23)

B6 Sport	**1.2, 1.5, 1.6** 01/55 - 12/68 25 -35 kW		**24-000321** OIO	HA: charakteristic: 280/100

VW TRANSPORTER II Bus

B6 Sport	**1.6** 08/67 - 07/70 34 kW	*24-632799* OIO	*24-632805* OIO	
B6 Sport	**1.6, 1.7** 08/70 - 08/73 37 -49 kW	*24-632799* OIO	*24-632805* OIO	
B6 Sport	**1.6, 1.7** 09/73 - 04/79 37 -49 kW	*24-632799* OIO	*24-634649* OIO	
B6 Sport	**1.8, 2.0** 11/73 - 04/79 50 -51 kW	*24-632799* OIO	*24-634649* OIO	

VW TRANSPORTER II Box

B6 Sport	**1.6** 08/70 - 08/73 37 kW	*24-632799* OIO	*24-632805* OIO	
B6 Sport	**1.7** 08/71 - 08/73 49 kW	*24-632799* OIO	*24-632805* OIO	
B6 Sport	**1.8, 2.0** 11/73 - 07/79 50 -51 kW	*24-632799* OIO	*24-634649* OIO	

VW TRANSPORTER II Flatbed / Chassis

B6 Sport	**1.6** 08/68 - 08/73 37 kW	*24-632799* OIO	*24-632805* OIO	
B6 Sport	**1.6** 09/73 - 07/79 37 kW	*24-632799* OIO	*24-634649* OIO	

VW TRANSPORTER III Bus

B3	**1.6, 1.6 D, 1.6 TD, 1.7 D, 1.9, 2.0, 2.1, 2.1 i** 05/79 - 07/92 37 -82 kW	**36-134465**	**38-131172**	with standard chassis
B3	**1.6, 1.6 D, 1.6 TD, 1.7 D, 1.9, 2.0, 2.1, 2.1 i** 05/79 - 07/92 37 -82 kW	**36-134472**	**38-131172**	with standard chassis; Heavy Duty Version . HA: Only in connection with Dämpfer 24-008303
B3	**1.6 TD Syncro, 1.9 Syncro, 2.1 Syncro** 01/86 - 07/92 51 -82 kW		**38-131219**	with standard chassis
B4	**1.6, 1.6 D, 1.6 TD, 1.7 D, 1.9, 2.0, 2.1, 2.1 i** 05/79 - 07/92 37 -82 kW	**19-020198** OIO	**19-020075** OIO	

V

VW				
VW TRANSPORTER III Bus				
B4	**1.6 TD Syncro, 1.9 Syncro, 2.1 Syncro** 01/86 - 07/92 51 -82 kW	19-217468	**19-216966**	Spacers required for several wheel/tyre combinations
B6 Sport	**1.6, 1.6 D, 1.6 TD, 1.7 D, 1.9, 2.0, 2.1, 2.1 i** 05/79 - 07/92 37 -82 kW	**24-008204**	**24-008303**	
VW TRANSPORTER III Box				
B3	**1.6, 1.6 D, 1.6 TD, 1.7 D, 1.9, 2.0, 2.1, 2.1 i** 05/79 - 07/92 37 -82 kW	**36-134465**	**38-131172**	with standard chassis
B3	**1.6, 1.6 D, 1.6 TD, 1.7 D, 1.9, 2.0, 2.1, 2.1 i** 05/79 - 07/92 37 -82 kW	**36-134472**	**38-131172**	with standard chassis; Heavy Duty Version . HA: Only in connection with Dämpfer 24-008303
B3	**1.6 TD Syncro, 1.9 Syncro, 2.1 Syncro** 08/85 - 07/92 51 -82 kW		**38-131219**	with standard chassis
B4	**1.6, 1.6 D, 1.6 TD, 1.7 D, 1.9, 2.0, 2.1, 2.1 i** 05/79 - 07/92 37 -82 kW	**19-020198**	**19-020075**	
B4	**1.6 TD Syncro, 1.9 Syncro, 2.1 Syncro** 08/85 - 07/92 51 -82 kW	19-217468	**19-216966**	
B6 Sport	**1.6, 1.6 D, 1.6 TD, 1.7 D, 1.9, 2.0, 2.1, 2.1 i** 05/79 - 07/92 37 -82 kW	**24-008204**	**24-008303**	
VW TRANSPORTER III Flatbed / Chassis				
B3	**1.6 D, 1.6 TD, 1.7 D, 1.9, 2.0, 2.1, 2.1 i** 05/79 - 07/92 37 -82 kW	**36-134465**	**38-131172**	with standard chassis
B3	**1.6 D, 1.6 TD, 1.7 D, 1.9, 2.0, 2.1, 2.1 i** 05/79 - 07/92 37 -82 kW	**36-134472**	**38-131172**	with standard chassis; Heavy Duty Version . HA: Only in connection with Dämpfer 24-008303
B3	**1.6 TD Syncro, 1.9 Syncro, 2.1 Syncro** 08/85 - 07/92 51 -82 kW		**38-131219**	with standard chassis
B4	**1.6 D, 1.6 TD, 1.7 D, 1.9, 2.0, 2.1, 2.1 i** 05/79 - 07/92 37 -82 kW	**19-020198**	**19-020075**	
B4	**1.6 TD Syncro, 1.9 Syncro, 2.1 Syncro** 08/85 - 07/92 51 -82 kW	19-217468	**19-216966**	
B6 Sport	**1.6 D, 1.6 TD, 1.7 D, 1.9, 2.0, 2.1, 2.1 i** 05/79 - 07/92 37 -82 kW	**24-008204**	**24-008303**	
VW TRANSPORTER IV Bus (70XB, 70XC, 7DB, 7DW)				
B3	**1.6, 1.8, 1.9, 1.9 D, 1.9 TD, 2.0, 2.4 D, 2.4 D Syncro, 2.5, 2.5 Syncro, 2.5 TDI, 2.5 TDI Syncro, 2.8 Syncro, 2.8 V6, 2.8 VR 6** 11/90 - 04/03 44 -150 kW		**38-131233**	with standard chassis
B3	**1.6, 1.8, 1.9, 1.9 D, 1.9 TD, 2.0, 2.4 D, 2.4 D Syncro, 2.5, 2.5 Syncro, 2.5 TDI, 2.5 TDI Syncro, 2.8 Syncro, 2.8 V6, 2.8 VR 6** 11/90 - 04/03 44 -150 kW		**38-131240**	with standard chassis; Heavy Duty Version .

V

VW				
VW TRANSPORTER IV Bus (70XB, 70XC, 7DB, 7DW)				
B4	**1.6, 1.8, 1.9, 1.9 D, 1.9 TD, 2.0, 2.4 D, 2.4 D Syncro, 2.5, 2.5 Syncro, 2.5 TDI, 2.5 TDI Syncro, 2.8 Syncro, 2.8 V6, 2.8 VR 6** 11/90 - 04/03 44 -150 kW	**19-028514**	**19-028521**	HA: To Payload 1000 kg
B6 Sport	**1.6, 1.8, 1.9, 1.9 D, 1.9 TD, 2.0, 2.4 D, 2.4 D Syncro, 2.5, 2.5 Syncro, 2.5 TDI, 2.5 TDI Syncro, 2.8 Syncro, 2.8 V6, 2.8 VR 6** 11/90 - 04/03 44 -150 kW	**24-019118**	**24-214230**	
B12 PK	**1.8, 1.9, 1.9 D, 1.9 TD, 2.0, 2.4 D, 2.4 D Syncro, 2.5, 2.5 Syncro, 2.5 TDI, 2.5 TDI Syncro, 2.8 Syncro, 2.8 V6, 2.8 VR 6** 11/90 - 04/00 44 -150 kW	**46-192134**		Conditions see certificates VA: lowering (expertise): 40-45 mm; axle load to: 1600 kg HA: lowering (expertise): 45 mm; axle load to: 1490 kg
VW TRANSPORTER IV Box (70XA)				
B3	**1.6, 1.8, 1.9, 1.9 D, 1.9 TD, 2.0, 2.4 D, 2.4 D Syncro, 2.5, 2.5 Syncro, 2.5 TDI, 2.5 TDI Syncro** 11/90 - 04/03 45 -111 kW		**38-131233**	with standard chassis
B3	**1.6, 1.8, 1.9, 1.9 D, 1.9 TD, 2.0, 2.4 D, 2.4 D Syncro, 2.5, 2.5 Syncro, 2.5 TDI, 2.5 TDI Syncro** 11/90 - 04/03 45 -111 kW		**38-131240**	with standard chassis; Heavy Duty Version .
B4	**1.6, 1.8, 1.9, 1.9 D, 1.9 TD, 2.0, 2.4 D, 2.4 D Syncro, 2.5, 2.5 Syncro, 2.5 TDI, 2.5 TDI Syncro, 2.8 VR6** 11/90 - 04/03 45 -150 kW	**19-028514**	**19-028521**	HA: To Payload 1000 kg
B6 Sport	**1.6, 1.8, 1.9, 1.9 D, 1.9 TD, 2.0, 2.4 D, 2.4 D Syncro, 2.5, 2.5 Syncro, 2.5 TDI, 2.5 TDI Syncro, 2.8 VR6** 11/90 - 04/03 45 -150 kW	**24-019118**	**24-214230**	
B12 PK	**1.8, 1.9, 1.9 D, 1.9 TD, 2.0, 2.4 D, 2.4 D Syncro, 2.5, 2.5 Syncro, 2.5 TDI, 2.5 TDI Syncro, 2.8 VR6** 11/90 - 04/03 45 -150 kW	**46-192134**		Conditions see certificates VA: lowering (expertise): 40-45 mm; axle load to: 1600 kg HA: lowering (expertise): 45 mm; axle load to: 1490 kg
VW TRANSPORTER IV Flatbed / Chassis (70XD)				
B3	**1.8, 1.9 D, 1.9 TD, 2.0, 2.4 D, 2.4 D Syncro, 2.5, 2.5 Syncro, 2.5 TDI, 2.5 TDI Syncro, 2.8 VR6** 11/90 - 04/03 45 -150 kW		**38-131233**	with standard chassis
B3	**1.8, 1.9 D, 1.9 TD, 2.0, 2.4 D, 2.4 D Syncro, 2.5, 2.5 Syncro, 2.5 TDI, 2.5 TDI Syncro, 2.8 VR6** 11/90 - 04/03 45 -150 kW		**38-131240**	with standard chassis; Heavy Duty Version .
B4	**1.8, 1.9 D, 1.9 TD, 2.0, 2.4 D, 2.4 D Syncro, 2.5, 2.5 Syncro, 2.5 TDI, 2.5 TDI Syncro, 2.8 VR6** 11/90 - 04/03 45 -150 kW	**19-028514**	**19-028521**	HA: To Payload 1000 kg
B6 Sport	**1.8, 1.9 D, 1.9 TD, 2.0, 2.4 D, 2.4 D Syncro, 2.5, 2.5 Syncro, 2.5 TDI, 2.5 TDI Syncro, 2.8 VR6** 11/90 - 04/03 45 -150 kW	**24-019118**	**24-214230**	
B12 PK	**1.8, 1.9 D, 1.9 TD, 2.0, 2.4 D, 2.4 D Syncro, 2.5, 2.5 Syncro, 2.5 TDI, 2.5 TDI Syncro, 2.8, 2.8 VR6** 11/90 - 04/03 45 -150 kW	**46-192134**		Conditions see certificates VA: lowering (expertise): 40-45 mm; axle load to: 1600 kg HA: lowering (expertise): 45 mm; axle load to: 1490 kg

V

VW

VW MULTIVAN V (7HM, 7HF, 7HN, 7EF, 7EM, 7EN)

B1	**1.9 TDI, 2.0, 2.0 BiTDI, 2.0 BiTDI 4motion, 2.0 TDI, 2.0 TDI 4motion, 2.0 TSI, 2.0 TSI 4motion, 2.5 TDI, 2.5 TDI 4motion, 3.2 4motion, 3.2 V6, 3.2 V6 4motion** 07/04 - 62 -173 kW	**12-224371**		VA: with ball bearing
B3	**1.9 TDI, 2.0, 2.0 TSI** 11/03 - 62 -150 kW	**37-148164**	**38-148194**	with standard chassis
B3	**1.9 TDI, 2.0, 2.0 TSI** 11/03 - 62 -150 kW	**37-148171**	**38-148200**	with standard chassis; Heavy Duty Version .
B3	**1.9 TDI, 2.0, 2.0 TSI** 11/03 - 62 -150 kW	**37-148164**	**38-148200**	with standard chassis; for campers
B3	**1.9 TDI, 2.0, 2.0 TSI** 11/03 - 62 -150 kW	**37-148171**	**38-163067**	with standard chassis; Heavy Duty Version .; for campers
B3	**2.5 TDI, 3.2 V6** 04/03 - 11/09 96 -173 kW	**37-148171**	**38-148194**	with standard chassis
B3	**2.5 TDI, 3.2 V6** 04/03 - 11/09 96 -173 kW		**38-148200**	with standard chassis; Heavy Duty Version .
B3	**2.5 TDI, 3.2 V6** 04/03 - 11/09 96 -173 kW	**37-148171**	**38-148200**	with standard chassis; for campers
B3	**2.5 TDI, 3.2 V6** 04/03 - 11/09 96 -173 kW		**38-163067**	with standard chassis; Heavy Duty Version .; for campers
B4	**1.9 TDI, 2.0, 2.0 BiTDI, 2.0 BiTDI 4motion, 2.0 TDI, 2.0 TDI 4motion, 2.0 TSI, 2.0 TSI 4motion, 2.5 TDI, 2.5 TDI 4motion, 3.2 4motion, 3.2 V6, 3.2 V6 4motion** 07/04 - 62 -173 kW	**22-140098**	**19-140100** OIO	without sport chassis; not for: 1BV VA: not for: 1BH
B4	**1.9 TDI, 2.0, 2.0 BiTDI, 2.0 BiTDI 4motion, 2.0 TDI, 2.0 TDI 4motion, 2.0 TSI, 2.0 TSI 4motion, 2.5 TDI, 2.5 TDI 4motion, 3.2 4motion, 3.2 V6, 3.2 V6 4motion** 07/04 - 62 -173 kW	**22-193032**	**19-140100** OIO	with off-road suspension; equipment: 1BH
B6 Sport	**1.9 TDI, 2.0, 2.0 BiTDI, 2.0 BiTDI 4motion, 2.0 TDI, 2.0 TDI 4motion, 2.0 TSI, 2.0 TSI 4motion, 2.5 TDI, 2.5 TDI 4motion, 3.2 4motion, 3.2 V6, 3.2 V6 4motion** 07/04 - 62 -173 kW	**22-142429**	**24-109116** OIO	without sport chassis; not for: 1BH; not for: 1BV
B6 Sport	**1.9 TDI, 2.0, 2.0 BiTDI, 2.0 BiTDI 4motion, 2.0 TDI, 2.0 TDI 4motion, 2.0 TSI, 2.0 TSI 4motion, 2.5 TDI, 2.5 TDI 4motion, 3.2 4motion, 3.2 V6, 3.2 V6 4motion** 07/04 - 62 -173 kW	**22-197320**	**24-109116** OIO	equipment: 1BH
B8	**1.9 TDI, 2.0, 2.0 BiTDI, 2.0 BiTDI 4motion, 2.0 TDI, 2.0 TDI 4motion, 2.0 TSI, 2.0 TSI 4motion, 2.5 TDI, 2.5 TDI 4motion, 3.2 4motion, 3.2 V6, 3.2 V6 4motion** 07/04 - 62 -173 kW	**22-142436**	**24-109130** OIO	with sports suspension; equipment: 1BV; not for: 1BH
B8	**1.9 TDI, 2.0, 2.0 BiTDI, 2.0 BiTDI 4motion, 2.0 TDI, 2.0 TDI 4motion, 2.0 TSI, 2.0 TSI 4motion, 2.5 TDI, 2.5 TDI 4motion, 3.2 4motion, 3.2 V6, 3.2 V6 4motion** 07/04 - 62 -173 kW	**22-197337**	**24-109116** OIO	equipment: 1BH
B12 PK	**1.9 TDI, 2.0, 2.0 BiTDI, 2.0 BiTDI 4motion, 2.0 TDI, 2.0 TDI 4motion, 2.0 TSI, 2.0 TSI 4motion** 11/03 - 62 -150 kW	**46-192141**		not for: 1BH; Conditions see certificates VA: lowering (expertise): 30 mm; axle load to: 1550 kg HA: lowering (expertise): 30 mm; axle load to: 1720 kg

V

VW

VW MULTIVAN V (7HM, 7HF, 7HN, 7EF, 7EM, 7EN)

B12 PK	**2.0 BiTDI, 2.0 BiTDI 4motion, 2.0 TDI, 2.0 TDI 4motion, 2.5 TDI, 2.5 TDI 4motion, 3.2 4motion, 3.2 V6, 3.2 V6 4motion** 07/04 - 62 -173 kW	**46-192158**		not for: 1BH; Conditions see certificates VA: lowering (expertise): 30 mm; axle load to: 1710 kg HA: lowering (expertise): 30 mm; axle load to: 1720 kg

VW TRANSPORTER V Bus (7HB, 7HJ, 7EB, 7EJ)

B3	**1.9 TDI, 2.0, 2.0 TSI, 2.0 TSI 4motion** 11/03 - 62 -150 kW	**37-148164**	**38-148194**	with standard chassis
B3	**1.9 TDI, 2.0, 2.0 TSI, 2.0 TSI 4motion** 11/03 - 62 -150 kW	**37-148171**	**38-148200**	with standard chassis; Heavy Duty Version .
B3	**1.9 TDI, 2.0, 2.0 TSI, 2.0 TSI 4motion** 11/03 - 62 -150 kW	**37-148164**	**38-163067**	with standard chassis; for campers
B3	**2.5 TDI, 3.2 V6** 04/03 - 11/09 96 -173 kW	**37-148171**	**38-148200**	with standard chassis
B3	**2.5 TDI, 3.2 V6** 04/03 - 11/09 96 -173 kW		**38-163067**	with standard chassis; Heavy Duty Version .
B3	**2.5 TDI, 3.2 V6** 04/03 - 11/09 96 -173 kW	**37-148171**	**38-163067**	with standard chassis; for campers
B4	**1.9 TDI, 2.0, 2.0 BiTDI, 2.0 BiTDI 4motion, 2.0 TDI, 2.0 TDI 4motion, 2.0 TSI, 2.0 TSI 4motion, 2.5 TDI, 2.5 TDI 4motion, 3.2 4motion, 3.2 V6** 02/04 - 62 -173 kW	**22-140098**	**19-140100** OIO	without sport chassis; not for: 1BV VA: not for: 1BH
B4	**1.9 TDI, 2.0, 2.0 BiTDI, 2.0 BiTDI 4motion, 2.0 TDI, 2.0 TDI 4motion, 2.0 TSI, 2.0 TSI 4motion, 2.5 TDI, 2.5 TDI 4motion, 3.2 4motion, 3.2 V6** 02/04 - 62 -173 kW	**22-193032**	**19-140100** OIO	with off-road suspension; equipment: 1BH
B6 Sport	**1.9 TDI, 2.0, 2.0 BiTDI, 2.0 BiTDI 4motion, 2.0 TDI, 2.0 TDI 4motion, 2.0 TSI, 2.0 TSI 4motion, 2.5 TDI, 2.5 TDI 4motion, 3.2 4motion, 3.2 V6** 02/04 - 62 -173 kW	**22-142429**	**24-109116** OIO	without sport chassis; not for: 1BH; not for: 1BV
B6 Sport	**1.9 TDI, 2.0, 2.0 BiTDI, 2.0 BiTDI 4motion, 2.0 TDI, 2.0 TDI 4motion, 2.0 TSI, 2.0 TSI 4motion, 2.5 TDI, 2.5 TDI 4motion, 3.2 4motion, 3.2 V6** 02/04 - 62 -173 kW	**22-197320**	**24-109116** OIO	equipment: 1BH; not for: 1BV
B8	**1.9 TDI, 2.0, 2.0 BiTDI, 2.0 BiTDI 4motion, 2.0 TDI, 2.0 TDI 4motion, 2.0 TSI, 2.0 TSI 4motion, 2.5 TDI, 2.5 TDI 4motion, 3.2 4motion, 3.2 V6** 02/04 - 62 -173 kW	**22-142436**	**24-109130** OIO	with sports suspension; equipment: 1BV; not for: 1BH
B8	**1.9 TDI, 2.0, 2.0 BiTDI, 2.0 BiTDI 4motion, 2.0 TDI, 2.0 TDI 4motion, 2.0 TSI, 2.0 TSI 4motion, 2.5 TDI, 2.5 TDI 4motion, 3.2 4motion, 3.2 V6** 02/04 - 62 -173 kW	**22-197337**	**24-109116** OIO	equipment: 1BH
B12 PK	**1.9 TDI, 2.0, 2.0 BiTDI 4motion, 2.0 TDI, 2.0 TDI 4motion, 2.0 TSI, 2.0 TSI 4motion** 11/03 - 62 -150 kW	**46-192141**		not for: 1BH; Conditions see certificates VA: lowering (expertise): 30 mm; axle load to: 1550 kg HA: lowering (expertise): 30 mm; axle load to: 1720 kg
B12 PK	**2.0 BiTDI 4motion, 2.0 TDI, 2.0 TDI 4motion, 2.0 TSI 4motion, 2.5 TDI, 2.5 TDI 4motion, 3.2 4motion, 3.2 V6** 02/04 - 62 -173 kW	**46-192158**		not for: 1BH; Conditions see certificates VA: lowering (expertise): 30 mm; axle load to: 1710 kg HA: lowering (expertise): 30 mm; axle load to: 1720 kg

V

VW				
VW TRANSPORTER V Box (7HA, 7HH, 7EA, 7EH)				
B3	**1.9 TDI, 2.0, 2.0 TSI, 2.0 TSI 4motion** 11/03 - 62 -150 kW	**37-148164**	**38-163050**	with standard chassis
B3	**1.9 TDI, 2.0, 2.0 TSI, 2.0 TSI 4motion** 11/03 - 62 -150 kW	**37-148171**	**38-148194**	with standard chassis; Heavy Duty Version .
B3	**2.5 TDI, 3.2 V6** 04/03 - 11/09 96 -173 kW	**37-148171**	**38-163050**	with standard chassis
B3	**2.5 TDI, 3.2 V6** 04/03 - 11/09 96 -173 kW	**37-148188**	**38-148194**	with standard chassis; Heavy Duty Version .
B4	**1.9 TDI, 2.0, 2.0 BiTDI, 2.0 BiTDI 4motion, 2.0 TDI, 2.0 TDI 4motion, 2.0 TSI, 2.0 TSI 4motion, 2.5 TDI, 2.5 TDI 4motion, 3.2 4motion, 3.2 V6** 02/04 - 62 -173 kW	**22-140098**	**19-140100** OIO	without sport chassis; not for: 1BV VA: not for: 1BH
B4	**1.9 TDI, 2.0, 2.0 BiTDI, 2.0 BiTDI 4motion, 2.0 TDI, 2.0 TDI 4motion, 2.0 TSI, 2.0 TSI 4motion, 2.5 TDI, 2.5 TDI 4motion, 3.2 4motion, 3.2 V6** 02/04 - 62 -173 kW	**22-193032**	**19-140100** OIO	with off-road suspension; equipment: 1BH
B6 Sport	**1.9 TDI, 2.0, 2.0 BiTDI, 2.0 BiTDI 4motion, 2.0 TDI, 2.0 TDI 4motion, 2.0 TSI, 2.0 TSI 4motion, 2.5 TDI, 2.5 TDI 4motion, 3.2 4motion, 3.2 V6** 02/04 - 62 -173 kW	**22-142429**	**24-109116** OIO	without sport chassis; not for: 1BH; not for: 1BV
B6 Sport	**1.9 TDI, 2.0, 2.0 BiTDI, 2.0 BiTDI 4motion, 2.0 TDI, 2.0 TDI 4motion, 2.0 TSI, 2.0 TSI 4motion, 2.5 TDI, 2.5 TDI 4motion, 3.2 4motion, 3.2 V6** 02/04 - 62 -173 kW	**22-197320**	**24-109116** OIO	equipment: 1BH
B8	**1.9 TDI, 2.0, 2.0 BiTDI, 2.0 BiTDI 4motion, 2.0 TDI, 2.0 TDI 4motion, 2.0 TSI, 2.0 TSI 4motion, 2.5 TDI, 2.5 TDI 4motion, 3.2 4motion, 3.2 V6** 02/04 - 62 -173 kW	**22-142436**	**24-109130** OIO	with sports suspension; equipment: 1BV; not for: 1BH
B8	**1.9 TDI, 2.0, 2.0 BiTDI, 2.0 BiTDI 4motion, 2.0 TDI, 2.0 TDI 4motion, 2.0 TSI, 2.0 TSI 4motion, 2.5 TDI, 2.5 TDI 4motion, 3.2 4motion, 3.2 V6** 02/04 - 62 -173 kW	**22-197337**	**24-109116** OIO	with off-road suspension; equipment: 1BH
B12 PK	**1.9 TDI, 2.0, 2.0 BiTDI, 2.0 BiTDI 4motion, 2.0 TDI, 2.0 TDI 4motion, 2.0 TSI, 2.0 TSI 4motion** 11/03 - 62 -150 kW	**46-192141**		not for: 1BH; Conditions see certificates VA: lowering (expertise): 30 mm; axle load to: 1550 kg HA: lowering (expertise): 30 mm; axle load to: 1720 kg
B12 PK	**2.0 BiTDI, 2.0 BiTDI 4motion, 2.0 TDI, 2.0 TDI 4motion, 2.5 TDI, 2.5 TDI 4motion, 3.2 4motion, 3.2 V6** 02/04 - 62 -173 kW	**46-192158**		not for: 1BH; Conditions see certificates VA: lowering (expertise): 30 mm; axle load to: 1710 kg HA: lowering (expertise): 30 mm; axle load to: 1720 kg
VW TRANSPORTER V Flatbed / Chassis (7JD, 7JE, 7JL, 7JY, 7JZ)				
B3	**1.9 TDI, 2.0** 11/03 - 62 -85 kW	**37-148164**	**38-148224**	with standard chassis; mark: Einzelkabine
B3	**1.9 TDI, 2.0** 11/03 - 62 -85 kW	**37-148171**		with standard chassis; Heavy Duty Version .; mark: Einzelkabine
B3	**1.9 TDI, 2.0** 11/03 - 62 -85 kW	**37-148171**	**38-148224**	with standard chassis; mark: Doppelkabine
B3	**1.9 TDI, 2.0** 11/03 - 62 -85 kW	**37-148188**		with standard chassis; Heavy Duty Version .; mark: Doppelkabine

V

VW				
VW TRANSPORTER V Flatbed / Chassis (7JD, 7JE, 7JL, 7JY, 7JZ)				
B3	**2.5 TDI, 3.2 V6** 04/03 - 11/09 96 -173 kW	**37-148188**	**38-148224**	with standard chassis
B4	**1.9 TDI, 2.0, 2.0 BiTDI, 2.0 BiTDI 4motion, 2.0 TDI, 2.0 TDI 4motion, 2.5 TDI, 2.5 TDI 4motion, 3.2 4motion, 3.2 V6** 08/03 - 62 -173 kW	**22-140098**	**19-140100**	not for: 1BH; not for: 1BV
B4	**1.9 TDI, 2.0, 2.0 BiTDI, 2.0 BiTDI 4motion, 2.0 TDI, 2.0 TDI 4motion, 2.5 TDI, 2.5 TDI 4motion, 3.2 4motion, 3.2 V6** 08/03 - 62 -173 kW	**22-193032**	**19-140100**	with off-road suspension; equipment: 1BH
B6 Sport	**1.9 TDI, 2.0, 2.0 BiTDI, 2.0 BiTDI 4motion, 2.0 TDI, 2.0 TDI 4motion, 2.5 TDI, 2.5 TDI 4motion, 3.2 4motion, 3.2 V6** 08/03 - 62 -173 kW	**22-142429**	**24-109116**	not for: 1BH; not for: 1BV
B6 Sport	**1.9 TDI, 2.0, 2.0 BiTDI, 2.0 BiTDI 4motion, 2.0 TDI, 2.0 TDI 4motion, 2.5 TDI, 2.5 TDI 4motion, 3.2 4motion, 3.2 V6** 08/03 - 62 -173 kW	**22-197320**	**24-109116**	equipment: 1BH
B8	**1.9 TDI, 2.0, 2.0 BiTDI, 2.0 BiTDI 4motion, 2.0 TDI, 2.0 TDI 4motion, 2.5 TDI, 2.5 TDI 4motion, 3.2 4motion, 3.2 V6** 08/03 - 62 -173 kW	**22-142436**	**24-109130**	with sports suspension; equipment: 1BV; not for: 1BH
B8	**1.9 TDI, 2.0, 2.0 BiTDI, 2.0 BiTDI 4motion, 2.0 TDI, 2.0 TDI 4motion, 2.5 TDI, 2.5 TDI 4motion, 3.2 4motion, 3.2 V6** 08/03 - 62 -173 kW	**22-197337**	**24-109116**	equipment: 1BH
B12 PK	**1.9 TDI, 2.0, 2.0 TDI, 2.0 TDI 4motion** 11/03 - 62 -103 kW	**46-192141**		not for: 1BH; Conditions see certificates VA: lowering (expertise): 30 mm; axle load to: 1550 kg HA: lowering (expertise): 30 mm; axle load to: 1720 kg
B12 PK	**2.0 BiTDI, 2.0 BiTDI 4motion, 2.0 TDI, 2.0 TDI 4motion, 2.5 TDI, 2.5 TDI 4motion, 3.2 4motion, 3.2 V6** 08/03 - 62 -173 kW	**46-192158**		not for: 1BH; Conditions see certificates VA: lowering (expertise): 30 mm; axle load to: 1710 kg HA: lowering (expertise): 30 mm; axle load to: 1720 kg
VW-FAW				
VW-FAW MAGOTAN (B6)				
B4	**1.4 T, 1.8, 2.0, 2.0 TSi** 04/08 - 07/11 85 -147 kW	**22-151056**	**19-151069**	with standard chassis VA: Øa: 55 mm
B4	**1.4 T, 1.8, 2.0, 2.0 TSi** 04/08 - 07/11 85 -147 kW	**22-151070**	**19-151083**	with sports suspension VA: Øa: 55 mm
B6 Sport	**1.4 T, 1.8, 2.0, 2.0 TSi** 04/08 - 07/11 85 -147 kW	**35-122074**	**24-172936**	VA: Øa: 55 mm
B8	**1.4 T, 1.8, 2.0, 2.0 TSi** 04/08 - 07/11 85 -147 kW	**35-122081**	**24-178006**	VA: Øa: 55 mm
VW-FAW SAGITAR				
B4	**1.6, 2.0** 02/06 - 74 -85 kW	**22-183712**	**19-127439**	with standard chassis; without electronic suspension control VA: outside diameter strut 50 mm
B6 Sport	**1.6, 2.0** 02/06 - 74 -85 kW	**35-158707**	**33-158723**	without electronic suspension control VA: outside diameter strut 50 mm
B8	**1.6, 2.0** 02/06 - 74 -85 kW	**35-158738**	**24-158756**	without electronic suspension control VA: outside diameter strut 50 mm

V

VW-FAW

VW-FAW SAGITAR

B4	**1.4 T, 1.6, 1.8, 1.8 FSI** 04/06 - 74 -118 kW	**22-183712**	**19-127439**	with standard chassis; without electronic suspension control VA: outside diameter strut 50 mm
B6 Sport	**1.4 T, 1.6, 1.8, 1.8 FSI** 04/06 - 74 -118 kW	**35-158707**	**33-158723**	without electronic suspension control VA: outside diameter strut 50 mm
B8	**1.4 T, 1.6, 1.8, 1.8 FSI** 04/06 - 74 -118 kW	**35-158738**	**24-158756**	without electronic suspension control VA: outside diameter strut 50 mm

SVW

SVW LAVIDA

B4	**1.4 TSi, 1.6, 2.0** 04/08 - 77 -96 kW	**22-045744** **11-103455** SP	**19-140032** **11-115755** SP	with standard chassis
B6 Sport	**1.4 TSi, 1.6, 2.0** 04/08 - 77 -96 kW	**35-044079**	**24-026239** **11-115755** SP	VA: Mono Tube Upside Down
B8	**1.4 TSi, 1.6, 2.0** 04/08 - 77 -96 kW	**35-044086**	**24-026246** **11-115755** SP	VA: Mono Tube Upside Down

WARTBURG

WARTBURG 353

B6 Sport	**1.0, 1.3** 06/66 - 05/91 33 -43 kW	*34-465578*	*34-465585*	VA: Quick Repair Service .; Used part return required . HA: Quick Repair Service .; Used part return required .
MS	**1.0** 06/66 - 08/88 33 -37 kW	**24-618106**	**24-618113**	mark: Rallye

WARTBURG 353 Tourist

B6 Sport	**1.0, 1.3** 10/67 - 05/91 33 -43 kW	*34-465578*	*34-465585*	VA: Quick Repair Service .; Used part return required . HA: Quick Repair Service .; Used part return required .
MS	**1.0, 1.3** 10/67 - 05/91 33 -43 kW	**24-618106**	**24-618113**	mark: Rallye

ZASTAVA

ZASTAVA YUGO

B4	**0.9, 1.1 60 EFI, 1.3 65 EFI** 04/80 - 06/95 33 -48 kW		*22-040794* **11-101352** SP	

New order number – Old order number

New	Old	Page
11-101291	ASP-A129	290
11-101291	ASP-A129	542
11-101291	ASP-A129	543
11-101291	ASP-A129	544
11-101291	ASP-A129	548
11-101291	ASP-A129	549
11-101291	ASP-A129	552
11-101291	ASP-A129	553
11-101291	ASP-A129	556
11-101291	ASP-A129	557
11-101291	ASP-A129	558
11-101291	ASP-A129	668
11-101291	ASP-A129	670
11-101291	ASP-A129	671
11-101291	ASP-A129	674
11-101291	ASP-A129	675
11-101291	ASP-A129	676
11-101291	ASP-A129	677
11-101291	ASP-A129	678
11-101291	ASP-A129	679
11-101291	ASP-A129	683
11-101291	ASP-A129	695
11-101291	ASP-A129	696
11-101291	ASP-A129	704
11-101291	ASP-A129	705
11-101291	ASP-A129	706
11-101291	ASP-A129	707
11-101291	ASP-A129	708
11-101291	ASP-A129	722
11-101291	ASP-A129	723
11-101291	ASP-A129	724
11-101291	ASP-A129	725
11-101291	ASP-A129	729
11-101291	ASP-A129	730
11-101291	ASP-A129	735
11-101291	ASP-A129	736
11-101307	ASP-A130	69
11-101307	ASP-A130	70
11-101307	ASP-A130	71
11-101307	ASP-A130	72
11-101307	ASP-A130	73
11-101307	ASP-A130	74
11-101307	ASP-A130	75
11-101307	ASP-A130	76
11-101307	ASP-A130	78
11-101307	ASP-A130	542
11-101307	ASP-A130	548
11-101307	ASP-A130	552
11-101307	ASP-A130	553
11-101307	ASP-A130	556
11-101307	ASP-A130	558
11-101307	ASP-A130	669
11-101307	ASP-A130	673
11-101307	ASP-A130	699
11-101307	ASP-A130	700
11-101307	ASP-A130	701
11-101307	ASP-A130	702
11-101307	ASP-A130	703
11-101307	ASP-A130	704
11-101307	ASP-A130	723
11-101307	ASP-A130	725
11-101307	ASP-A130	728
11-101307	ASP-A130	729
11-101314	ASP-A131	145
11-101314	ASP-A131	146
11-101314	ASP-A131	147
11-101314	ASP-A131	153
11-101314	ASP-A131	154
11-101314	ASP-A131	181
11-101314	ASP-A131	182
11-101314	ASP-A131	183
11-101314	ASP-A131	254
11-101314	ASP-A131	260
11-101314	ASP-A131	261
11-101314	ASP-A131	262
11-101314	ASP-A131	409
11-101314	ASP-A131	426
11-101314	ASP-A131	427
11-101314	ASP-A131	428
11-101314	ASP-A131	429
11-101314	ASP-A131	430
11-101314	ASP-A131	431
11-101314	ASP-A131	439
11-101314	ASP-A131	440
11-101314	ASP-A131	441
11-101314	ASP-A131	442
11-101314	ASP-A131	443
11-101314	ASP-A131	444
11-101314	ASP-A131	445
11-101314	ASP-A131	446
11-101314	ASP-A131	455
11-101314	ASP-A131	456
11-101314	ASP-A131	457
11-101314	ASP-A131	458
11-101314	ASP-A131	459
11-101314	ASP-A131	603
11-101314	ASP-A131	604
11-101314	ASP-A131	605
11-101314	ASP-A131	606
11-101314	ASP-A131	607
11-101314	ASP-A131	608
11-101314	ASP-A131	622
11-101314	ASP-A131	624
11-101314	ASP-A131	625
11-101314	ASP-A131	626
11-101314	ASP-A131	627
11-101314	ASP-A131	628
11-101314	ASP-A131	634
11-101314	ASP-A131	635
11-101314	ASP-A131	638
11-101314	ASP-A131	639
11-101314	ASP-A131	640
11-101314	ASP-A131	653
11-101314	ASP-A131	654
11-101314	ASP-A131	661
11-101314	ASP-A131	662
11-101321	ASP-A132	15
11-101321	ASP-A132	91
11-101321	ASP-A132	92
11-101321	ASP-A132	93
11-101321	ASP-A132	94
11-101321	ASP-A132	119
11-101321	ASP-A132	120
11-101321	ASP-A132	121
11-101321	ASP-A132	123
11-101321	ASP-A132	130
11-101321	ASP-A132	136
11-101321	ASP-A132	546
11-101321	ASP-A132	550
11-101321	ASP-A132	556
11-101321	ASP-A132	557
11-101321	ASP-A132	561
11-101321	ASP-A132	562
11-101321	ASP-A132	563
11-101321	ASP-A132	564
11-101321	ASP-A132	572
11-101321	ASP-A132	726
11-101321	ASP-A132	727
11-101338	ASP-A133	201
11-101338	ASP-A133	202
11-101338	ASP-A133	208
11-101338	ASP-A133	214
11-101338	ASP-A133	215
11-101338	ASP-A133	216
11-101338	ASP-A133	217
11-101338	ASP-A133	218
11-101338	ASP-A133	219
11-101338	ASP-A133	220
11-101338	ASP-A133	222
11-101338	ASP-A133	224
11-101338	ASP-A133	226
11-101338	ASP-A133	240
11-101338	ASP-A133	293
11-101345	ASP-A134	71
11-101345	ASP-A134	72
11-101345	ASP-A134	75
11-101345	ASP-A134	76
11-101345	ASP-A134	91
11-101345	ASP-A134	673
11-101345	ASP-A134	695
11-101345	ASP-A134	730
11-101345	ASP-A134	731
11-101352	ASP-A135	542
11-101352	ASP-A135	543
11-101352	ASP-A135	544
11-101352	ASP-A135	545
11-101352	ASP-A135	546
11-101352	ASP-A135	548
11-101352	ASP-A135	549
11-101352	ASP-A135	550
11-101352	ASP-A135	557
11-101352	ASP-A135	558
11-101352	ASP-A135	564
11-101352	ASP-A135	565
11-101352	ASP-A135	670
11-101352	ASP-A135	674
11-101352	ASP-A135	675
11-101352	ASP-A135	676
11-101352	ASP-A135	679
11-101352	ASP-A135	683
11-101352	ASP-A135	684
11-101352	ASP-A135	695
11-101352	ASP-A135	696
11-101352	ASP-A135	702
11-101352	ASP-A135	703
11-101352	ASP-A135	704
11-101352	ASP-A135	705
11-101352	ASP-A135	706
11-101352	ASP-A135	707
11-101352	ASP-A135	708
11-101352	ASP-A135	725
11-101352	ASP-A135	728
11-101352	ASP-A135	729
11-101352	ASP-A135	730
11-101352	ASP-A135	735
11-101352	ASP-A135	736
11-101352	ASP-A135	747
11-101369	ASP-A136	255
11-101369	ASP-A136	410
11-101369	ASP-A136	411
11-101369	ASP-A136	412
11-101369	ASP-A136	413
11-101369	ASP-A136	414
11-101369	ASP-A136	427
11-101369	ASP-A136	448
11-101369	ASP-A136	453
11-101369	ASP-A136	608
11-101369	ASP-A136	609
11-101369	ASP-A136	610
11-101369	ASP-A136	611
11-101369	ASP-A136	620
11-101369	ASP-A136	622
11-101369	ASP-A136	637
11-101369	ASP-A136	648
11-101376	ASP-A137	165
11-101376	ASP-A137	167
11-101376	ASP-A137	174
11-101376	ASP-A137	175
11-101376	ASP-A137	176
11-101376	ASP-A137	177
11-101376	ASP-A137	307
11-101376	ASP-A137	361
11-101376	ASP-A137	362
11-101376	ASP-A137	472
11-101376	ASP-A137	473
11-101376	ASP-A137	474
11-101376	ASP-A137	479
11-101376	ASP-A137	480
11-101376	ASP-A137	481
11-101376	ASP-A137	485
11-101376	ASP-A137	486
11-101376	ASP-A137	493
11-101383	ASP-A138	191
11-101383	ASP-A138	292
11-101390	ASP-A139	25
11-101390	ASP-A139	26
11-101390	ASP-A139	29
11-101390	ASP-A139	56
11-101390	ASP-A139	69
11-101390	ASP-A139	85
11-101390	ASP-A139	671
11-101390	ASP-A139	707
11-101390	ASP-A139	720
11-101390	ASP-A139	721
11-101390	ASP-A139	722
11-101406	ASP-A140	316
11-101406	ASP-A140	317
11-101406	ASP-A140	334
11-101406	ASP-A140	335
11-101406	ASP-A140	339
11-101406	ASP-A140	340
11-101406	ASP-A140	341
11-101413	ASP-A141	77
11-101413	ASP-A141	78
11-101420	*ASP-A142*	*490*
11-101437	ASP-A143	243
11-101437	ASP-A143	244
11-101437	ASP-A143	245
11-101437	ASP-A143	276
11-101437	ASP-A143	277
11-101451	ASP-A145	119
11-101451	ASP-A145	130
11-101468	ASP-A146	220
11-101468	ASP-A146	221
11-101468	ASP-A146	223
11-101468	ASP-A146	225
11-101468	ASP-A146	279
11-101468	ASP-A146	280
11-101468	ASP-A146	298
11-101482	*ASP-A148*	*305*
11-101499	ASP-A149	188
11-101499	ASP-A149	189
11-101499	ASP-A149	206
11-101499	ASP-A149	207
11-101499	ASP-A149	291
11-101512	ASP-A151	148
11-101512	ASP-A151	256
11-101512	ASP-A151	257
11-101512	ASP-A151	260
11-101512	ASP-A151	415
11-101512	ASP-A151	416
11-101512	ASP-A151	417
11-101512	ASP-A151	418
11-101512	ASP-A151	419
11-101512	ASP-A151	460
11-101512	ASP-A151	461
11-101512	ASP-A151	462
11-101512	ASP-A151	612
11-101512	ASP-A151	613
11-101512	ASP-A151	615
11-101512	ASP-A151	616
11-101512	ASP-A151	621
11-101918	ASP-A191	2
11-101918	ASP-A191	3
11-101918	ASP-A191	4
11-101918	ASP-A191	5
11-101918	ASP-A191	10
11-101918	ASP-A191	396
11-101918	ASP-A191	489
11-101918	ASP-A191	490
11-101918	ASP-A191	589
11-101918	ASP-A191	593
11-101918	ASP-A191	594
11-103455	ASP-A345	15
11-103455	ASP-A345	16
11-103455	ASP-A345	553
11-103455	ASP-A345	559
11-103455	ASP-A345	566
11-103455	ASP-A345	567
11-103455	ASP-A345	665
11-103455	ASP-A345	667
11-103455	ASP-A345	669
11-103455	ASP-A345	670
11-103455	ASP-A345	680
11-103455	ASP-A345	682
11-103455	ASP-A345	700
11-103455	ASP-A345	701
11-103455	ASP-A345	747
11-103462	ASP-A346	29
11-103462	ASP-A346	30
11-103462	ASP-A346	58
11-103622	ASP-A362	659
11-103622	ASP-A362	660
11-103622	ASP-A362	661
11-103622	ASP-A362	662
11-103622	ASP-A362	663
11-103943	ASP-A394	52
11-103943	ASP-A394	53
11-103943	ASP-A394	54
11-103943	ASP-A394	63
11-103943	ASP-A394	77
11-103943	ASP-A394	78
11-103943	ASP-A394	79
11-103943	ASP-A394	80
11-103943	ASP-A394	81
11-103943	ASP-A394	82
11-103943	ASP-A394	83
11-103943	ASP-A394	84
11-104322	ASP-A432	677
11-104322	ASP-A432	678
11-104322	ASP-A432	679
11-104957	ASP-A495	235
11-104957	ASP-A495	236
11-104957	ASP-A495	237
11-104957	ASP-A495	251
11-104964	ASP-A496	235
11-104964	ASP-A496	236
11-104964	ASP-A496	237
11-104964	ASP-A496	251
11-105886	ASP-A588	220
11-105886	ASP-A588	221
11-105886	ASP-A588	223
11-105886	ASP-A588	224
11-105886	ASP-A588	226
11-105886	ASP-A588	298
11-106470	ASP-A647	546
11-106470	ASP-A647	550
11-106470	ASP-A647	551
11-106470	ASP-A647	552
11-106470	ASP-A647	561
11-106470	ASP-A647	562
11-106470	ASP-A647	563
11-106470	ASP-A647	564
11-106470	ASP-A647	572
11-106470	ASP-A647	722
11-106470	ASP-A647	724
11-106470	ASP-A647	725
11-106470	ASP-A647	726
11-106470	ASP-A647	727
11-106487	ASP-A648	723
11-106487	ASP-A648	724
11-115755	ASP-B575	15
11-115755	ASP-B575	16
11-115755	ASP-B575	553
11-115755	ASP-B575	559
11-115755	ASP-B575	566
11-115755	ASP-B575	567
11-115755	ASP-B575	665
11-115755	ASP-B575	666
11-115755	ASP-B575	667
11-115755	ASP-B575	680
11-115755	ASP-B575	682
11-115755	ASP-B575	700
11-115755	ASP-B575	701
11-115755	ASP-B575	747
11-116141	ASP-B614	565
11-122449	ASP-C244	163
11-122449	ASP-C244	174
11-122456	ASP-C245	448
11-122456	ASP-C245	449
11-122456	ASP-C245	450
11-122456	ASP-C245	451
11-122456	ASP-C245	453
11-122456	ASP-C245	623
11-122456	ASP-C245	636
11-122456	ASP-C245	637
11-125358	ASP-C535	314
11-125358	ASP-C535	315
11-125358	ASP-C535	316
11-149828	ASP-E982	512
11-149828	ASP-E982	513
11-149828	ASP-E982	542
11-149828	ASP-E982	699
11-149828	ASP-E982	700
11-149835	ASP-E983	34
11-149835	ASP-E983	37
11-149835	ASP-E983	39
11-149835	ASP-E983	55
11-149835	ASP-E983	58
11-149835	ASP-E983	85
11-149835	ASP-E983	572
11-149835	ASP-E983	708
11-149835	ASP-E983	709
11-149835	ASP-E983	710
11-149835	ASP-E983	712
11-149835	ASP-E983	714
11-181415	ASP-E180	95
11-181415	ASP-E180	96
11-181415	ASP-E180	98
11-181415	ASP-E180	99
11-181415	ASP-E180	100
11-181415	ASP-E180	101
11-181415	ASP-E180	102
11-181415	ASP-E180	103
11-181415	ASP-E180	104
11-181415	ASP-E180	105
11-181415	ASP-E180	106
11-181415	ASP-E180	107
11-181415	ASP-E180	108
11-181415	ASP-E180	141
12-116614	AFS-B661	163
12-116614	AFS-B661	471
12-116621	AFS-B662	163
12-116621	AFS-B662	173
12-116621	AFS-B662	471
12-116621	AFS-B662	472
12-116669	AFS-B666	216
12-116669	AFS-B666	217
12-116669	AFS-B666	218
12-116669	AFS-B666	219
12-116669	AFS-B666	240
12-116676	AFS-B667	235
12-116676	AFS-B667	236
12-116676	AFS-B667	237
12-116744	AFS-B674	196
12-116768	AFS-B676	70
12-116768	AFS-B676	71
12-116768	AFS-B676	72
12-116768	AFS-B676	73
12-116768	AFS-B676	74
12-116768	AFS-B676	75
12-116768	AFS-B676	76
12-116768	AFS-B676	702
12-116768	AFS-B676	703
12-116768	AFS-B676	728
12-116768	AFS-B676	729
12-116775	AFS-B677	670
12-116775	AFS-B677	675
12-116775	AFS-B677	677
12-116775	AFS-B677	704
12-116775	AFS-B677	706
12-116775	AFS-B677	729
12-116775	AFS-B677	735
12-116799	AFS-B679	181
12-116799	AFS-B679	182
12-116799	AFS-B679	183
12-116799	AFS-B679	441
12-116799	AFS-B679	443
12-116799	AFS-B679	444
12-116799	AFS-B679	445
12-116799	AFS-B679	446
12-116799	AFS-B679	606
12-116799	AFS-B679	607
12-116799	AFS-B679	608
12-116805	AFS-B680	425
12-116805	AFS-B680	426
12-116805	AFS-B680	457
12-116805	AFS-B680	458
12-116805	AFS-B680	622
12-116805	AFS-B680	624
12-116805	AFS-B680	625
12-116812	AFS-B681	255
12-116812	AFS-B681	410
12-116812	AFS-B681	411
12-116812	AFS-B681	412
12-116812	AFS-B681	413
12-116812	AFS-B681	414
12-116812	AFS-B681	609
12-116812	AFS-B681	610
12-116812	AFS-B681	611
12-116812	AFS-B681	620
12-116829	AFS-B682	94
12-116829	AFS-B682	97
12-116829	AFS-B682	99
12-116829	AFS-B682	100
12-116829	AFS-B682	136
12-116836	AFS-B683	190
12-116836	AFS-B683	203
12-116843	AFS-B684	197
12-116850	AFS-B685	187

New order number – Old order number

New	Old	Page
12-116850	AFS-B685	188
12-116850	AFS-B685	194
12-116867	AFS-B686	218
12-116867	AFS-B686	220
12-116867	AFS-B686	221
12-116928	AFS-B692	334
12-116928	AFS-B692	335
12-116928	AFS-B692	338
12-116928	AFS-B692	339
12-116928	AFS-B692	340
12-116928	AFS-B692	341
12-116959	AFS-B695	542
12-116959	AFS-B695	699
12-116959	AFS-B695	722
12-116959	AFS-B695	725
12-116966	AFS-B696	14
12-116966	AFS-B696	15
12-116966	AFS-B696	65
12-116966	AFS-B696	67
12-116966	AFS-B696	540
12-116966	AFS-B696	551
12-116966	AFS-B696	552
12-116966	AFS-B696	559
12-116966	AFS-B696	565
12-116966	AFS-B696	665
12-116966	AFS-B696	667
12-116966	AFS-B696	679
12-116966	AFS-B696	680
12-116966	AFS-B696	682
12-116966	AFS-B696	727
12-117000	AFS-B700	175
12-117000	AFS-B700	176
12-117000	AFS-B700	479
12-117000	AFS-B700	480
12-117000	AFS-B700	481
12-117024	AFS-B702	512
12-117024	AFS-B702	513
12-117024	AFS-B702	515
12-117048	AFS-B704	247
12-117048	AFS-B704	248
12-117079	AFS-B707	15
12-117079	AFS-B707	561
12-117079	AFS-B707	562
12-117079	AFS-B707	563
12-117079	AFS-B707	564
12-117079	AFS-B707	565
12-117079	AFS-B707	665
12-117079	AFS-B707	667
12-117079	AFS-B707	679
12-117079	AFS-B707	682
12-117079	AFS-B707	700
12-117079	AFS-B707	726
12-117086	AFS-B708	52
12-117086	AFS-B708	53
12-117086	AFS-B708	63
12-117086	AFS-B708	78
12-117086	AFS-B708	79
12-117086	AFS-B708	81
12-117086	AFS-B708	82
12-117086	AFS-B708	83
12-117093	AFS-B709	91
12-117093	AFS-B709	93
12-117093	AFS-B709	94
12-117109	AFS-B710	94
12-117109	AFS-B710	97
12-117109	AFS-B710	99
12-117109	AFS-B710	100
12-117109	AFS-B710	101
12-117109	AFS-B710	103
12-117109	AFS-B710	104
12-117109	AFS-B710	107
12-117109	AFS-B710	136
12-117109	AFS-B710	137
12-117116	AFS-B711	120
12-117116	AFS-B711	123
12-117123	AFS-B712	124
12-117130	AFS-B713	131
12-117154	AFS-B715	223
12-117154	AFS-B715	226
12-117161	AFS-B716	223
12-117161	AFS-B716	225
12-117161	AFS-B716	226
12-117161	AFS-B716	234
12-117161	AFS-B716	241
12-117161	AFS-B716	298
12-117185	AFS-B718	235
12-117185	AFS-B718	236
12-117185	AFS-B718	237
12-117239	AFS-B723	542
12-117239	AFS-B723	544
12-117239	AFS-B723	545
12-117239	AFS-B723	548
12-117239	AFS-B723	670
12-117239	AFS-B723	674
12-117239	AFS-B723	675
12-117239	AFS-B723	677
12-117239	AFS-B723	679
12-117239	AFS-B723	695
12-117239	AFS-B723	722
12-117239	AFS-B723	723
12-117239	AFS-B723	724
12-117239	AFS-B723	735
12-117253	AFS-B725	133
12-117260	AFS-B726	87
12-117260	AFS-B726	89
12-117260	AFS-B726	90
12-117260	AFS-B726	101
12-117260	AFS-B726	103
12-117260	AFS-B726	104
12-117260	AFS-B726	106
12-117260	AFS-B726	107
12-117260	AFS-B726	109
12-117260	AFS-B726	111
12-117260	AFS-B726	124
12-117260	AFS-B726	125
12-117260	AFS-B726	127
12-117260	AFS-B726	128
12-117260	AFS-B726	130
12-117260	AFS-B726	131
12-117260	AFS-B726	134
12-117260	AFS-B726	135
12-117260	AFS-B726	142
12-117314	AFS-B731	313
12-117314	AFS-B731	316
12-117321	AFS-B732	77
12-117321	AFS-B732	78
12-117321	AFS-B732	79
12-117321	AFS-B732	82
12-117321	AFS-B732	83
12-117338	AFS-B733	52
12-117338	AFS-B733	53
12-117338	AFS-B733	63
12-117338	AFS-B733	81
12-117338	AFS-B733	82
12-117369	AFS-B736	668
12-117369	AFS-B736	672
12-117369	AFS-B736	673
12-117369	AFS-B736	695
12-117369	AFS-B736	730
12-117376	AFS-B737	160
12-117376	AFS-B737	255
12-117376	AFS-B737	256
12-117376	AFS-B737	257
12-117376	AFS-B737	263
12-117376	AFS-B737	414
12-117376	AFS-B737	416
12-117376	AFS-B737	417
12-117376	AFS-B737	418
12-117376	AFS-B737	419
12-117376	AFS-B737	447
12-117376	AFS-B737	459
12-117376	AFS-B737	460
12-117376	AFS-B737	462
12-117376	AFS-B737	468
12-117376	AFS-B737	612
12-117376	AFS-B737	613
12-117376	AFS-B737	614
12-117376	AFS-B737	615
12-117376	AFS-B737	621
12-117376	AFS-B737	633
12-117376	AFS-B737	639
12-117376	AFS-B737	641
12-117376	AFS-B737	642
12-117376	AFS-B737	648
12-117383	AFS-B738	69
12-117383	AFS-B738	671
12-117383	AFS-B738	720
12-117383	AFS-B738	721
12-117390	AFS-B739	256
12-117390	AFS-B739	257
12-117390	AFS-B739	261
12-117390	AFS-B739	414
12-117390	AFS-B739	416
12-117390	AFS-B739	417
12-117390	AFS-B739	418
12-117390	AFS-B739	419
12-117390	AFS-B739	431
12-117390	AFS-B739	456
12-117390	AFS-B739	459
12-117390	AFS-B739	460
12-117390	AFS-B739	462
12-117390	AFS-B739	612
12-117390	AFS-B739	613
12-117390	AFS-B739	614
12-117390	AFS-B739	615
12-117390	AFS-B739	616
12-117390	AFS-B739	621
12-117390	AFS-B739	628
12-117390	AFS-B739	630
12-117390	AFS-B739	639
12-117390	AFS-B739	640
12-117390	AFS-B739	642
12-117444	AFS-B744	516
12-117451	AFS-B745	516
12-117475	AFS-B747	70
12-117475	AFS-B747	71
12-117475	AFS-B747	72
12-117475	AFS-B747	73
12-117475	AFS-B747	74
12-117475	AFS-B747	75
12-117475	AFS-B747	76
12-117475	AFS-B747	702
12-117475	AFS-B747	703
12-117475	AFS-B747	728
12-117475	AFS-B747	729
12-117499	AFS-B749	172
12-117499	AFS-B749	173
12-117499	AFS-B749	202
12-117499	AFS-B749	207
12-117499	AFS-B749	491
12-117499	AFS-B749	492
12-117505	AFS-B750	172
12-117505	AFS-B750	173
12-117505	AFS-B750	202
12-117505	AFS-B750	207
12-117505	AFS-B750	293
12-117505	AFS-B750	491
12-117505	AFS-B750	492
12-117529	AFS-B752	178
12-117529	AFS-B752	179
12-117529	AFS-B752	210
12-117529	AFS-B752	211
12-117529	AFS-B752	493
12-117529	AFS-B752	494
12-117529	AFS-B752	495
12-117536	AFS-B753	178
12-117536	AFS-B753	179
12-117536	AFS-B753	210
12-117536	AFS-B753	211
12-117536	AFS-B753	493
12-117536	AFS-B753	494
12-117536	AFS-B753	495
12-117550	AFS-B755	187
12-117550	AFS-B755	188
12-117550	AFS-B755	206
12-117550	AFS-B755	291
12-117550	AFS-B755	292
12-117567	AFS-B756	187
12-117567	AFS-B756	188
12-117567	AFS-B756	206
12-117567	AFS-B756	291
12-117567	AFS-B756	292
12-117598	AFS-B759	124
12-117598	AFS-B759	125
12-117628	AFS-B762	91
12-117628	AFS-B762	93
12-117628	AFS-B762	94
12-117628	AFS-B762	119
12-117628	AFS-B762	120
12-117628	AFS-B762	123
12-117628	AFS-B762	129
12-117628	AFS-B762	136
12-117635	AFS-B763	426
12-117635	AFS-B763	457
12-117635	AFS-B763	458
12-117635	AFS-B763	624
12-117635	AFS-B763	625
12-117642	AFS-B764	25
12-117642	AFS-B764	28
12-117642	AFS-B764	32
12-117642	AFS-B764	35
12-117642	AFS-B764	55
12-117642	AFS-B764	57
12-117642	AFS-B764	64
12-117642	AFS-B764	708
12-117642	AFS-B764	709
12-117642	AFS-B764	711
12-117642	AFS-B764	713
12-117659	AFS-B765	233
12-117659	AFS-B765	542
12-117659	AFS-B765	544
12-117659	AFS-B765	545
12-117659	AFS-B765	548
12-117659	AFS-B765	552
12-117659	AFS-B765	557
12-117659	AFS-B765	668
12-117659	AFS-B765	669
12-117659	AFS-B765	675
12-117659	AFS-B765	677
12-117659	AFS-B765	679
12-117659	AFS-B765	683
12-117659	AFS-B765	704
12-117659	AFS-B765	706
12-117659	AFS-B765	723
12-117659	AFS-B765	724
12-117659	AFS-B765	729
12-117659	AFS-B765	732
12-117659	AFS-B765	735
12-117703	AFS-B770	125
12-117710	AFS-B771	2
12-117710	AFS-B771	3
12-117710	AFS-B771	4
12-117727	AFS-B772	2
12-117727	AFS-B772	3
12-117727	AFS-B772	4
12-117741	AFS-B774	546
12-117741	AFS-B774	550
12-117741	AFS-B774	725
12-117772	AFS-B777	428
12-117772	AFS-B777	429
12-117796	AFS-B779	486
12-117796	AFS-B779	487
12-117796	AFS-B779	488
12-117802	AFS-B780	474
12-117802	AFS-B780	476
12-117802	AFS-B780	477
12-117819	AFS-B781	474
12-117819	AFS-B781	476
12-117819	AFS-B781	477
12-117840	AFS-B784	15
12-117840	AFS-B784	546
12-117840	AFS-B784	549
12-117840	AFS-B784	550
12-117840	AFS-B784	571
12-117840	AFS-B784	665
12-117840	AFS-B784	667
12-117840	AFS-B784	679
12-117840	AFS-B784	682
12-117840	AFS-B784	700
12-117864	AFS-B786	333
12-117864	AFS-B786	346
12-117864	AFS-B786	348
12-117888	AFS-B788	226
12-117888	AFS-B788	227
12-117888	AFS-B788	228
12-117888	AFS-B788	246
12-117895	AFS-B789	106
12-117895	AFS-B789	137
12-117895	AFS-B789	138
12-117925	AFS-B792	163
12-117925	AFS-B792	165
12-117925	AFS-B792	176
12-117925	AFS-B792	177
12-117925	AFS-B792	493
12-117932	AFS-B793	481
12-117932	AFS-B793	482
12-117932	AFS-B793	483
12-117963	AFS-B796	548
12-117963	AFS-B796	674
12-117963	AFS-B796	695
12-125104	AFS-C510	254
12-125104	AFS-C510	443
12-125104	AFS-C510	444
12-125104	AFS-C510	445
12-125104	AFS-C510	446
12-167616	AFS-G761	358
12-173495	AFS-H349	357
12-224036		427
12-224036		432
12-224036		626
12-224074		17
12-224074		20
12-224074		24
12-224074		68
12-224074		539
12-224074		540
12-224074		554
12-224074		560
12-224074		568
12-224074		569
12-224074		573
12-224074		574
12-224074		669
12-224074		670
12-224074		672
12-224074		684
12-224074		687
12-224074		689
12-224074		691
12-224074		692
12-224074		693
12-224074		696
12-224074		697
12-224074		716
12-224074		717
12-224074		718
12-224074		719
12-224074		720
12-224074		731
12-224074		733
12-224081		718
12-224081		719
12-224081		720
12-224081		731
12-224081		733
12-224098		24
12-224098		68
12-224098		69
12-224104	AFS-B748	363
12-224104	AFS-B748	364
12-224104	AFS-B748	365
12-224104	AFS-B748	366
12-224104	AFS-B748	367
12-224104	AFS-B748	739
12-224104	AFS-B748	740
12-224111	AFS-B778	652
12-224111	AFS-B778	655
12-224128		652
12-224128		655
12-224135		237
12-224135		238
12-224142		237
12-224142		238
12-224159		320
12-224159		322
12-224159		324
12-224159		325
12-224159		331
12-224159		332
12-224166		229
12-224166		230
12-224166		231
12-224166		302
12-224166		303
12-224166		649
12-224166		651
12-224166		652
12-224166		653
12-224173		228
12-224173		229
12-224173		230
12-224173		231
12-224180		516
12-224180		517
12-224197		153
12-224197		154
12-224197		260
12-224197		261
12-224197		427
12-224197		429
12-224197		431
12-224197		455
12-224197		626
12-224197		627
12-224197		628
12-224197		638
12-224203	AFS-B767	511
12-224203	AFS-B767	523
12-224210		406
12-224210		471
12-224210		530
12-224210		648
12-224227		519
12-224227		520
12-224227		521
12-224227		522
12-224227		523
12-224234		196
12-224234		197
12-224234		198
12-224234		199
12-224241		179
12-224241		180
12-224241		517
12-224258		167
12-224258		168
12-224265		367
12-224265		368
12-224265		369
12-224265		370
12-224265		371
12-224265		737
12-224265		738
12-224272		191
12-224272		454
12-224272		463
12-224272		464
12-224272		466
12-224272		533
12-224272		637
12-224272		643
12-224272		644
12-224272		646
12-224289		361
12-224289		362
12-224296		372
12-224296		373
12-224302		128
12-224302		130
12-224302		134

New order number – Old order number

New	Old	Page
12-224319		134
12-224326		600
12-224326		601
12-224333		169
12-224333		170
12-224333		481
12-224333		482
12-224333		483
12-224340		224
12-224340		232
12-224340		298
12-224357		396
12-224357		513
12-224357		514
12-224357		521
12-224364		396
12-224364		513
12-224364		514
12-224364		521
12-224371		743
12-224388		224
12-224388		232
12-224395		672
12-224395		726
12-224401	AFS-B740	124
12-224418	AFS-B761	124
12-224425	AFS-B766	124
12-224432		87
12-224432		89
12-224432		109
12-224432		111
12-224432		113
12-224432		115
12-224432		128
12-224449		419
12-224449		420
12-224449		421
12-224449		422
12-224449		424
12-224449		469
12-224449		616
12-224449		617
12-224449		618
12-224456		419
12-224456		421
12-224456		422
12-224456		424
12-224456		469
12-224456		616
12-224456		617
12-224456		618
12-224463		38
12-224463		40
12-224463		44
12-224463		63
12-224463		547
12-224470		40
12-224470		44
12-224470		60
12-224470		61
12-224470		62
12-224470		547
12-224487		60
12-224487		61
12-224623		326
12-224623		328
12-225323		15
12-225323		549
12-225323		571
12-225323		726
12-225347		225
12-225354		225
12-225385		248
12-225385		249
12-225828	AFS-B691	316
12-225835		326
12-225835		328
12-225835		361
12-225842		326
12-225842		328
12-225842		361
12-226344		349
12-226344		350
12-226351		374
12-226351		375
12-226351		376
12-226351		377
12-226368		393
12-226368		394
12-226368		400
12-226368		401
12-226399		433
12-226399		434
12-226399		630
12-226405		191
12-226405		192
12-226405		193
12-226405		195
12-226405		203
12-226405		205

New	Old	Page
12-226412		191
12-226412		192
12-226412		193
12-226412		195
12-226412		203
12-226412		205
12-226429		551
12-226429		552
12-226429		727
12-226436		87
12-226436		89
12-226436		90
12-226436		109
12-226436		111
12-226436		113
12-226436		115
12-226443		87
12-226443		89
12-226443		90
12-226443		109
12-226443		111
12-226443		113
12-226443		115
12-226450		11
12-226450		200
12-226450		201
12-226467		11
12-226467		200
12-226467		201
12-226481		173
12-226481		193
12-226481		194
12-226481		200
12-226481		201
12-226481		491
12-226481		492
12-226504		173
12-226504		193
12-226504		194
12-226504		200
12-226504		201
12-226504		491
12-226504		492
12-226528		477
12-226528		478
12-226528		479
12-226535		20
12-226535		65
12-226535		68
12-226535		69
12-226535		539
12-226535		568
12-226535		569
12-226535		732
12-226542		167
12-226542		168
12-226542		491
12-226559		171
12-226559		172
12-226559		484
12-226580		539
12-226580		732
15-062178	BTE-6217	74
15-062178	BTE-6217	75
15-062185	BTE-6218	70
15-062185	BTE-6218	71
15-062185	BTE-6218	72
15-062185	BTE-6218	75
15-062185	BTE-6218	76
15-062192	BTE-6219	557
15-062192	BTE-6219	558
15-062192	BTE-6219	674
15-062192	BTE-6219	675
15-062192	BTE-6219	695
15-062192	BTE-6219	735
15-062208	BTE-6220	704
15-062208	BTE-6220	706
15-062208	BTE-6220	729
15-062208	BTE-6220	730
15-062215	BTE-6221	181
15-062215	BTE-6221	182
15-062215	BTE-6221	183
15-062215	BTE-6221	255
15-062215	BTE-6221	410
15-062215	BTE-6221	411
15-062215	BTE-6221	412
15-062215	BTE-6221	413
15-062215	BTE-6221	414
15-062215	BTE-6221	442
15-062215	BTE-6221	443
15-062215	BTE-6221	445
15-062215	BTE-6221	446
15-062215	BTE-6221	457
15-062215	BTE-6221	458
15-062215	BTE-6221	606
15-062215	BTE-6221	607
15-062215	BTE-6221	608
15-062215	BTE-6221	609
15-062215	BTE-6221	610
15-062215	BTE-6221	611

New	Old	Page
15-062215	BTE-6221	624
15-062215	BTE-6221	625
15-064127	BTE-6412	78
15-064127	BTE-6412	79
15-064462	BTE-6446	288
15-064462	BTE-6446	289
15-064462	BTE-6446	290
15-064677	*BTE-6467*	*289*
15-064677	*BTE-6467*	*290*
15-069115	BTE-6911	412
15-069115	BTE-6911	414
15-069115	BTE-6911	444
15-069115	BTE-6911	605
15-069115	BTE-6911	608
15-069115	BTE-6911	610
15-069122	BTE-6912	702
15-069122	BTE-6912	703
15-069122	BTE-6912	728
15-069122	BTE-6912	729
15-069139	BTE-6913	78
15-069139	BTE-6913	79
15-069139	BTE-6913	83
15-069139	BTE-6913	84
15-069146	BTE-6914	243
15-069146	BTE-6914	244
15-069146	BTE-6914	245
15-069153	BTE-6915	473
15-069153	BTE-6915	474
15-069153	BTE-6915	479
15-069153	BTE-6915	480
15-069153	BTE-6915	481
15-069153	BTE-6915	485
15-069160	BTE-6916	485
15-069160	BTE-6916	486
15-069177	BTE-6917	525
15-069177	BTE-6917	526
15-069177	BTE-6917	527
15-069177	BTE-6917	528
15-100078	BTE-A007	738
15-100078	BTE-A007	739
15-102096	BTE-A209	91
15-102096	BTE-A209	92
15-102096	BTE-A209	93
15-102096	BTE-A209	94
15-104311	BTE-A431	722
15-104311	BTE-A431	723
15-104311	BTE-A431	725
15-105257	BTE-A525	704
15-105257	BTE-A525	705
15-105257	BTE-A525	706
15-105257	BTE-A525	730
15-106377	BTE-A637	542
15-106377	BTE-A637	544
15-106377	BTE-A637	545
15-106377	BTE-A637	546
15-106377	BTE-A637	548
15-106377	BTE-A637	549
15-106384	BTE-A638	552
15-106384	BTE-A638	669
15-106384	BTE-A638	723
15-107077	BTE-A707	677
15-107282	BTE-A728	738
15-107664	*BTE-A766*	*525*
15-107664	*BTE-A766*	*526*
15-107664	*BTE-A766*	*527*
15-107664	*BTE-A766*	*528*
15-107664	*BTE-A766*	*529*
15-119469	BTE-B946	247
15-119469	BTE-B946	248
15-122582	BTE-C258	178
15-122582	BTE-C258	211
15-122582	BTE-C258	494
15-126191	BTE-C619	428
15-126191	BTE-C619	429
15-126191	BTE-C619	634
15-126191	BTE-C619	635
15-126405	BTE-C640	153
15-126405	BTE-C640	154
15-126405	BTE-C640	430
15-126405	BTE-C640	431
15-126405	BTE-C640	455
15-126405	BTE-C640	626
15-126405	BTE-C640	627
15-126405	BTE-C640	628
15-126405	BTE-C640	638
16-031289	PTE-3128	77
16-031289	PTE-3128	78
16-031289	PTE-3128	79
16-031289	PTE-3128	83
16-031289	PTE-3128	84
16-031296	PTE-3129	69
16-031296	PTE-3129	70
16-031296	PTE-3129	71
16-031296	PTE-3129	72
16-031296	PTE-3129	78
16-031296	PTE-3129	702
16-031296	PTE-3129	703
16-031296	PTE-3129	728
16-031296	PTE-3129	729
16-031302	PTE-3130	181

New	Old	Page
16-031302	PTE-3130	182
16-031302	PTE-3130	183
16-031302	PTE-3130	254
16-031302	PTE-3130	439
16-031302	PTE-3130	440
16-031302	PTE-3130	441
16-031302	PTE-3130	442
16-031302	PTE-3130	443
16-031302	PTE-3130	445
16-031302	PTE-3130	446
16-031302	PTE-3130	603
16-031302	PTE-3130	604
16-031302	PTE-3130	606
16-031302	PTE-3130	607
16-031319	PTE-3131	74
16-031319	PTE-3131	75
16-031319	PTE-3131	76
16-031326	PTE-3132	91
16-031326	PTE-3132	92
16-031326	PTE-3132	93
16-031333	PTE-3133	457
16-031333	PTE-3133	458
16-031333	PTE-3133	624
16-031333	PTE-3133	625
16-031340	PTE-3134	290
16-031456	PTE-3145	674
16-031456	PTE-3145	695
16-031470	PTE-3147	288
16-031470	PTE-3147	289
16-031548	PTE-3154	255
16-031548	PTE-3154	410
16-031548	PTE-3154	411
16-031548	PTE-3154	412
16-031548	PTE-3154	413
16-031548	PTE-3154	414
16-031548	PTE-3154	444
16-031548	PTE-3154	605
16-031548	PTE-3154	608
16-031548	PTE-3154	609
16-031548	PTE-3154	610
16-031548	PTE-3154	611
16-031548	PTE-3154	620
16-101920	PTE-A192	92
16-101920	PTE-A192	93
16-101920	PTE-A192	94
17-047142	VTE-4714	542
17-047142	VTE-4714	548
17-047142	VTE-4714	557
17-047142	VTE-4714	558
17-047142	VTE-4714	674
17-047142	VTE-4714	675
17-047142	VTE-4714	677
17-047142	VTE-4714	695
17-047142	VTE-4714	735
17-047166	VTE-4716	704
17-047166	VTE-4716	706
17-047166	VTE-4716	730
17-053273	VTE-5327	214
17-053273	VTE-5327	215
17-053273	VTE-5327	216
17-053273	VTE-5327	240
17-053310	VTE-5331	167
17-053310	VTE-5331	174
17-053310	VTE-5331	473
17-053310	VTE-5331	474
17-053310	VTE-5331	485
17-053334	VTE-5333	525
17-053334	VTE-5333	526
17-053334	VTE-5333	527
17-053334	VTE-5333	528
17-053334	VTE-5333	529
17-104029	VTE-A402	542
17-104029	VTE-A402	544
17-104029	VTE-A402	545
17-104029	VTE-A402	546
17-104029	VTE-A402	548
17-104029	VTE-A402	549
17-104029	VTE-A402	552
17-104029	VTE-A402	557
17-104029	VTE-A402	558
17-104029	VTE-A402	669
17-104029	VTE-A402	675
17-104029	VTE-A402	677
17-104029	VTE-A402	722
17-104029	VTE-A402	723
17-104029	VTE-A402	724
17-104029	VTE-A402	735
17-104104	VTE-A410	153
17-104104	VTE-A410	154
17-104104	VTE-A410	427
17-104104	VTE-A410	428
17-104104	VTE-A410	429
17-104104	VTE-A410	430
17-104104	VTE-A410	431
17-104104	VTE-A410	455
17-104104	VTE-A410	626
17-104104	VTE-A410	627
17-104104	VTE-A410	628
17-104104	VTE-A410	634
17-104104	VTE-A410	635

New	Old	Page
17-104104	VTE-A410	638
17-105248	VTE-A524	704
17-105248	VTE-A524	705
17-105248	VTE-A524	706
17-105248	VTE-A524	730
17-106405	VTE-A640	542
17-106405	VTE-A640	552
17-106405	VTE-A640	699
17-106405	VTE-A640	725
17-107150	VTE-A715	678
17-107150	VTE-A715	723
17-107150	VTE-A715	735
18-002461	B22-0246	336
18-002461	B22-0246	337
18-002461	B22-0246	338
18-002461	B22-0246	351
18-002461	B22-0246	352
18-002461	B22-0246	355
18-140644	B22-E064	354
18-140651	B22-E065	316
18-140651	B22-E065	317
18-140651	B22-E065	319
18-140651	B22-E065	320
18-140651	B22-E065	330
18-140651	B22-E065	334
18-140651	B22-E065	335
18-140651	B22-E065	339
18-140651	B22-E065	340
18-140651	B22-E065	341
18-140651	B22-E065	356
19-000725	BNE-H846	374
19-000725	BNE-H846	375
19-000725	BNE-H846	376
19-019291	*BNE-1929*	*187*
19-019291	*BNE-1929*	*209*
19-019291	*BNE-1929*	*561*
19-019291	*BNE-1929*	*583*
19-019291	*BNE-1929*	*584*
19-019307	BNE-1930	72
19-019307	BNE-1930	73
19-019307	BNE-1930	75
19-019307	BNE-1930	76
19-019314	BNE-1931	177
19-019314	BNE-1931	473
19-019314	BNE-1931	474
19-019314	BNE-1931	479
19-019314	BNE-1931	485
19-019321	*BNE-1932*	*177*
19-019338	BNE-1933	490
19-019345	BNE-1934	242
19-019352	*BNE-1935*	*396*
19-019390	*BNE-1939*	*196*
19-019390	*BNE-1939*	*556*
19-019390	*BNE-1939*	*557*
19-019406	*BNE-1940*	*524*
19-019406	*BNE-1940*	*525*
19-019437	*BNE-1943*	*185*
19-019437	*BNE-1943*	*585*
19-019437	*BNE-1943*	*589*
19-019444	BNE-1944	281
19-019444	BNE-1944	408
19-019444	BNE-1944	438
19-019444	BNE-1944	447
19-019444	BNE-1944	623
19-019444	BNE-1944	626
19-019505	*BNE-1950*	*535*
19-019505	*BNE-1950*	*536*
19-019512	*BNE-1951*	*701*
19-019529	BNE-1952	656
19-019529	BNE-1952	657
19-019529	BNE-1952	658
19-019536	BNE-1953	536
19-019536	BNE-1953	537
19-019543	BNE-1954	535
19-019543	BNE-1954	536
19-019543	BNE-1954	537
19-019550	BNE-1955	673
19-019550	BNE-1955	695
19-019550	BNE-1955	730
19-019550	BNE-1955	731
19-019567	*BNE-1956*	*1*
19-019567	*BNE-1956*	*8*
19-019567	*BNE-1956*	*9*
19-019567	*BNE-1956*	*539*
19-019574	*BNE-1957*	*8*
19-019574	*BNE-1957*	*9*
19-019598	*BNE-1959*	*426*
19-019598	*BNE-1959*	*437*
19-019598	*BNE-1959*	*438*
19-019598	*BNE-1959*	*451*
19-019598	*BNE-1959*	*452*
19-019598	*BNE-1959*	*585*
19-019598	*BNE-1959*	*589*
19-019598	*BNE-1959*	*590*
19-019598	*BNE-1959*	*591*
19-019598	*BNE-1959*	*626*
19-019604	*BNE-1960*	*407*
19-019604	*BNE-1960*	*408*
19-019604	*BNE-1960*	*447*
19-019604	*BNE-1960*	*452*

New order number – Old order number

New	Old	Page
19-019604	BNE-1960	623
19-019642	BNE-1964	69
19-019642	BNE-1964	671
19-019642	BNE-1964	720
19-019642	BNE-1964	721
19-019659	BNE-1965	702
19-019659	BNE-1965	703
19-019659	BNE-1965	704
19-019659	BNE-1965	728
19-019659	BNE-1965	729
19-019673	BNE-1967	74
19-019673	BNE-1967	75
19-019680	BNE-1968	70
19-019680	BNE-1968	71
19-019680	BNE-1968	72
19-019680	BNE-1968	75
19-019680	BNE-1968	76
19-019697	BNE-1969	77
19-019697	BNE-1969	78
19-019703	BNE-1970	243
19-019703	BNE-1970	244
19-019703	BNE-1970	245
19-019710	BNE-1971	522
19-019710	BNE-1971	524
19-019727	BNE-1972	145
19-019727	BNE-1972	146
19-019727	BNE-1972	147
19-019727	BNE-1972	153
19-019727	BNE-1972	154
19-019727	BNE-1972	260
19-019727	BNE-1972	261
19-019727	BNE-1972	428
19-019727	BNE-1972	430
19-019727	BNE-1972	431
19-019727	BNE-1972	455
19-019727	BNE-1972	627
19-019727	BNE-1972	628
19-019727	BNE-1972	635
19-019727	BNE-1972	639
19-019734	BNE-1973	208
19-019741	BNE-1974	558
19-019741	BNE-1974	674
19-019741	BNE-1974	676
19-019741	BNE-1974	679
19-019741	BNE-1974	683
19-019741	BNE-1974	695
19-019741	BNE-1974	735
19-019741	BNE-1974	736
19-019758	BNE-1975	262
19-019758	BNE-1975	426
19-019758	BNE-1975	622
19-019765	BNE-1976	163
19-019765	BNE-1976	174
19-019765	BNE-1976	472
19-019772	BNE-1977	412
19-019772	BNE-1977	445
19-019772	BNE-1977	605
19-019772	BNE-1977	608
19-019772	BNE-1977	611
19-019789	BNE-1978	1
19-019789	BNE-1978	2
19-019789	BNE-1978	10
19-019796	BNE-1979	1
19-019796	BNE-1979	2
19-019796	BNE-1979	10
19-019802	BNE-1980	91
19-019819	BNE-1981	92
19-019819	BNE-1981	93
19-019819	BNE-1981	94
19-019819	BNE-1981	136
19-019826	BNE-1982	2
19-019826	BNE-1982	3
19-019826	BNE-1982	4
19-019826	BNE-1982	206
19-019826	BNE-1982	207
19-019826	BNE-1982	291
19-019833	BNE-1983	196
19-019833	BNE-1983	293
19-019840	BNE-1984	223
19-019840	BNE-1984	225
19-019864	BNE-1986	254
19-019864	BNE-1986	409
19-019864	BNE-1986	439
19-019864	BNE-1986	440
19-019864	BNE-1986	442
19-019864	BNE-1986	444
19-019864	BNE-1986	446
19-019864	BNE-1986	604
19-019864	BNE-1986	605
19-019864	BNE-1986	606
19-019864	BNE-1986	607
19-019864	BNE-1986	624
19-019871	BNE-1987	658
19-019888	BNE-1988	659
19-019888	BNE-1988	660
19-019888	BNE-1988	661
19-019888	BNE-1988	662
19-019888	BNE-1988	663
19-019895	BNE-1989	524
19-019895	BNE-1989	525
19-019901	BNE-1990	526
19-019901	BNE-1990	527
19-019901	BNE-1990	528
19-019932	BNE-1993	702
19-019932	BNE-1993	703
19-019932	BNE-1993	704
19-019932	BNE-1993	728
19-019949	BNE-1994	705
19-019949	BNE-1994	707
19-019949	BNE-1994	729
19-019949	BNE-1994	730
19-019956	BNE-1995	181
19-019956	BNE-1995	182
19-019956	BNE-1995	183
19-019956	BNE-1995	255
19-019956	BNE-1995	410
19-019956	BNE-1995	411
19-019956	BNE-1995	413
19-019956	BNE-1995	414
19-019956	BNE-1995	442
19-019956	BNE-1995	444
19-019956	BNE-1995	446
19-019956	BNE-1995	457
19-019956	BNE-1995	459
19-019956	BNE-1995	606
19-019956	BNE-1995	607
19-019956	BNE-1995	608
19-019956	BNE-1995	609
19-019956	BNE-1995	610
19-019956	BNE-1995	611
19-019956	BNE-1995	624
19-019956	BNE-1995	625
19-019963	BNE-1996	670
19-019963	BNE-1996	674
19-019963	BNE-1996	676
19-019963	BNE-1996	736
19-019970	BNE-1997	427
19-019970	BNE-1997	431
19-019970	BNE-1997	446
19-019970	BNE-1997	626
19-019987	BNE-1998	511
19-019987	BNE-1998	512
19-019994	BNE-1999	216
19-019994	BNE-1999	217
19-019994	BNE-1999	218
19-019994	BNE-1999	219
19-019994	BNE-1999	220
19-019994	BNE-1999	240
19-020006	BNE-2000	448
19-020006	BNE-2000	453
19-020006	BNE-2000	457
19-020006	BNE-2000	459
19-020006	BNE-2000	623
19-020006	BNE-2000	624
19-020006	BNE-2000	625
19-020006	BNE-2000	637
19-020013	BNE-2001	244
19-020013	BNE-2001	245
19-020037	BNE-2003	452
19-020037	BNE-2003	590
19-020068	BNE-2006	120
19-020068	BNE-2006	121
19-020068	BNE-2006	123
19-020075	BNE-2007	740
19-020075	BNE-2007	741
19-020099	BNE-2009	398
19-020105	BNE-2010	398
19-020112	BNE-2011	525
19-020129	BNE-2012	398
19-020136	BNE-2013	398
19-020143	BNE-2014	398
19-020150	BNE-2015	79
19-020150	BNE-2015	80
19-020150	BNE-2015	83
19-020150	BNE-2015	84
19-020174	BNE-2017	119
19-020174	BNE-2017	130
19-020181	BNE-2018	530
19-020198	BNE-2019	740
19-020198	BNE-2019	741
19-027531	BNE-2753	97
19-028477	BNE-2847	389
19-028477	BNE-2847	402
19-028477	BNE-2847	407
19-028477	BNE-2847	603
19-028484	BNE-2848	724
19-028491	BNE-2849	678
19-028514	BNE-2851	742
19-028521	BNE-2852	742
19-028538	BNE-2853	449
19-028538	BNE-2853	623
19-028545	BNE-2854	523
19-028552	BNE-2855	451
19-028552	BNE-2855	636
19-028569	BNE-2856	396
19-028576	BNE-2857	191
19-028613	BNE-2861	450
19-028613	BNE-2861	636
19-028620	BNE-2862	399
19-028620	BNE-2862	400
19-028637	BNE-2863	132
19-028651	BNE-2865	543
19-028651	BNE-2865	544
19-028651	BNE-2865	545
19-028651	BNE-2865	546
19-028651	BNE-2865	548
19-028651	BNE-2865	549
19-028668	BNE-2866	543
19-028668	BNE-2866	545
19-028675	BNE-2867	133
19-028705	BNE-2870	385
19-028712	BNE-2871	246
19-028712	BNE-2871	385
19-028712	BNE-2871	389
19-028736	BNE-2873	386
19-028736	BNE-2873	387
19-028743	BNE-2874	386
19-028743	BNE-2874	387
19-028750	BNE-2875	601
19-028767	BNE-2876	379
19-028767	BNE-2876	382
19-028774	BNE-2877	580
19-028774	BNE-2877	581
19-028781	BNE-2878	580
19-028798	BNE-2879	254
19-028798	BNE-2879	583
19-028811	BNE-2881	263
19-028811	BNE-2881	264
19-028811	BNE-2881	265
19-028811	BNE-2881	532
19-028835	BNE-2883	400
19-028859	BNE-2885	381
19-028873	BNE-2887	73
19-028897	BNE-2889	295
19-028897	BNE-2889	435
19-028897	BNE-2889	631
19-028903	BNE-2890	295
19-028903	BNE-2890	435
19-028903	BNE-2890	631
19-029160	BNE-2916	15
19-029177	BNE-2917	15
19-029177	BNE-2917	553
19-029177	BNE-2917	559
19-029177	BNE-2917	566
19-029177	BNE-2917	665
19-029177	BNE-2917	680
19-029177	BNE-2917	700
19-029177	BNE-2917	701
19-029184	BNE-2918	74
19-029207	BNE-2920	25
19-029214	BNE-2921	52
19-029214	BNE-2921	53
19-029214	BNE-2921	54
19-029214	BNE-2921	79
19-029214	BNE-2921	80
19-029214	BNE-2921	81
19-029214	BNE-2921	82
19-029238	BNE-2923	197
19-029245	BNE-2924	197
19-029245	BNE-2924	198
19-029252	BNE-2925	188
19-029252	BNE-2925	189
19-029269	BNE-2926	194
19-029269	BNE-2926	195
19-029269	BNE-2926	207
19-029276	BNE-2927	234
19-029283	BNE-2928	225
19-029283	BNE-2928	226
19-029290	BNE-2929	223
19-029306	BNE-2930	224
19-029306	BNE-2930	226
19-029306	BNE-2930	298
19-029313	BNE-2931	217
19-029313	BNE-2931	219
19-029313	BNE-2931	221
19-029320	BNE-2932	220
19-029320	BNE-2932	223
19-029337	BNE-2933	220
19-029337	BNE-2933	221
19-029344	BNE-2934	460
19-029344	BNE-2934	461
19-029344	BNE-2934	462
19-029344	BNE-2934	640
19-029344	BNE-2934	641
19-029368	BNE-2936	485
19-029368	BNE-2936	486
19-029375	BNE-2937	529
19-029382	BNE-2938	537
19-029382	BNE-2938	538
19-029399	BNE-2939	548
19-029405	BNE-2940	564
19-029405	BNE-2940	565
19-029412	BNE-2941	565
19-029429	BNE-2942	553
19-029429	BNE-2942	559
19-029429	BNE-2942	566
19-029429	BNE-2942	665
19-029429	BNE-2942	680
19-029429	BNE-2942	700
19-029429	BNE-2942	701
19-029443	BNE-2944	55
19-029443	BNE-2944	58
19-029443	BNE-2944	85
19-029443	BNE-2944	572
19-029443	BNE-2944	708
19-029443	BNE-2944	709
19-029443	BNE-2944	710
19-029443	BNE-2944	712
19-029443	BNE-2944	714
19-029450	BNE-2945	653
19-029450	BNE-2945	654
19-029450	BNE-2945	661
19-040172	V36-4017	600
19-040189	V36-4018	600
19-041193	BNE-4119	288
19-041193	BNE-4119	289
19-041193	BNE-4119	290
19-045597	VNE-4559	236
19-045597	VNE-4559	237
19-045771	VNE-4577	25
19-045771	VNE-4577	29
19-045771	VNE-4577	55
19-045771	VNE-4577	56
19-045771	VNE-4577	58
19-045771	VNE-4577	85
19-045771	VNE-4577	708
19-045771	VNE-4577	709
19-045771	VNE-4577	710
19-050027	VN9-5002	347
19-061047	BNE-6104	165
19-061047	BNE-6104	167
19-061047	BNE-6104	493
19-061054	BNE-6105	172
19-061054	BNE-6105	207
19-061054	BNE-6105	293
19-061054	BNE-6105	491
19-061061	BNE-6106	193
19-061078	BNE-6107	233
19-061078	BNE-6107	538
19-061078	BNE-6107	732
19-061085	BNE-6108	281
19-061085	BNE-6108	282
19-061085	BNE-6108	405
19-061085	BNE-6108	634
19-061092	BNE-6109	235
19-061092	BNE-6109	405
19-061092	BNE-6109	406
19-061108	BNE-6110	282
19-061108	BNE-6110	448
19-061108	BNE-6110	633
19-061115	BNE-6111	282
19-061146	BNE-6114	286
19-061153	BNE-6115	286
19-061160	BNE-6116	286
19-061177	BNE-6117	293
19-061177	BNE-6117	294
19-061177	BNE-6117	295
19-061184	BNE-6118	294
19-061184	BNE-6118	295
19-061191	BNE-6119	293
19-061191	BNE-6119	294
19-061207	BNE-6120	293
19-061207	BNE-6120	294
19-061207	BNE-6120	295
19-061238	BNE-6123	487
19-061238	BNE-6123	488
19-061245	BNE-6124	487
19-061245	BNE-6124	488
19-061252	BNE-6125	518
19-061252	BNE-6125	519
19-061269	BNE-6126	519
19-061276	BNE-6127	537
19-061283	BNE-6128	378
19-061283	BNE-6128	389
19-061283	BNE-6128	650
19-061283	BNE-6128	651
19-062730	BNE-6273	263
19-062730	BNE-6273	276
19-062747	BNE-6274	263
19-062747	BNE-6274	276
19-062778	BNE-6277	268
19-062778	BNE-6277	269
19-062778	BNE-6277	274
19-062785	BNE-6278	268
19-062785	BNE-6278	269
19-062785	BNE-6278	274
19-062792	BNE-6279	273
19-062808	BNE-6280	273
19-062815	BNE-6281	273
19-062822	BNE-6282	273
19-062839	BNE-6283	269
19-062839	BNE-6283	274
19-062846	BNE-6284	269
19-062846	BNE-6284	274
19-062853	BNE-6285	263
19-062853	BNE-6285	264
19-062853	BNE-6285	265
19-062853	BNE-6285	532
19-062860	BNE-6286	263
19-062860	BNE-6286	264
19-062860	BNE-6286	265
19-062860	BNE-6286	532
19-062945	BNE-6294	270
19-062945	BNE-6294	271
19-062945	BNE-6294	531
19-062952	BNE-6295	270
19-062952	BNE-6295	271
19-062952	BNE-6295	531
19-062990	BNE-6299	381
19-062990	BNE-6299	382
19-063164	BNE-6316	268
19-063164	BNE-6316	274
19-063171	BNE-6317	263
19-063188	BNE-6318	268
19-063188	BNE-6318	269
19-063188	BNE-6318	274
19-063195	BNE-6319	268
19-063195	BNE-6319	269
19-063195	BNE-6319	274
19-063201	BNE-6320	273
19-063218	BNE-6321	273
19-063225	BNE-6322	270
19-063225	BNE-6322	271
19-063225	BNE-6322	273
19-063225	BNE-6322	531
19-063225	BNE-6322	532
19-063249	BNE-6324	264
19-063249	BNE-6324	265
19-063256	BNE-6325	276
19-063263	BNE-6326	276
19-063270	BNE-6327	269
19-063270	BNE-6327	270
19-063287	BNE-6328	276
19-063294	BNE-6329	279
19-063300	BNE-6330	297
19-063324	BNE-6332	298
19-063348	BNE-6334	383
19-063379	BNE-6337	380
19-063386	BNE-6338	379
19-063386	BNE-6338	380
19-063386	BNE-6338	383
19-063386	BNE-6338	384
19-063386	BNE-6338	510
19-063393	BNE-6339	381
19-063409	BNE-6340	379
19-063409	BNE-6340	380
19-063409	BNE-6340	384
19-063423	BNE-6342	382
19-063447	BNE-6344	279
19-063447	BNE-6344	287
19-063447	BNE-6344	387
19-063447	BNE-6344	388
19-063478	BNE-6347	392
19-063478	BNE-6347	393
19-063485	BNE-6348	392
19-063485	BNE-6348	393
19-063508	BNE-6350	400
19-063560	BNE-6356	592
19-063577	BNE-6357	600
19-063584	BNE-6358	600
19-064512	BNE-6451	371
19-064512	BNE-6451	372
19-064529	BNE-6452	363
19-064529	BNE-6452	364
19-064529	BNE-6452	365
19-064529	BNE-6452	366
19-064529	BNE-6452	371
19-064529	BNE-6452	372
19-064666	BNE-6466	289
19-064666	BNE-6466	290
19-065038	BNE-6503	184
19-065038	BNE-6503	579
19-065045	BNE-6504	159
19-065045	BNE-6504	182
19-065212	BNE-6521	162
19-065212	BNE-6521	186
19-065236	BNE-6523	514
19-065243	BNE-6524	514
19-065601	BNE-6560	177
19-065601	BNE-6560	210
19-065601	BNE-6560	496
19-065618	BNE-6561	210
19-065625	BNE-6562	177
19-065625	BNE-6562	210
19-065625	BNE-6562	495
19-065625	BNE-6562	496
19-065632	BNE-6563	210
19-065649	BNE-6564	247
19-065649	BNE-6564	248
19-065656	BNE-6565	178
19-065656	BNE-6565	179
19-065656	BNE-6565	211
19-065656	BNE-6565	212
19-065656	BNE-6565	494
19-065656	BNE-6565	495
19-065663	BNE-6566	211
19-065861	BNE-6586	526
19-065861	BNE-6586	527
19-065861	BNE-6586	528
19-065861	BNE-6586	529

New order number – Old order number

New	Old	Page
19-065878	BNE-6587	226
19-065878	BNE-6587	227
19-065885	BNE-6588	228
19-067346	BNE-6734	124
19-067803	BNE-6780	542
19-067803	BNE-6780	700
19-067834	BNE-6783	390
19-067971	BNE-6797	574
19-067971	BNE-6797	575
19-068022	BNE-6802	173
19-068022	BNE-6802	202
19-068022	BNE-6802	492
19-068121	BNE-6812	472
19-068138	BNE-6813	474
19-068138	BNE-6813	479
19-068138	BNE-6813	480
19-068138	BNE-6813	481
19-068145	BNE-6814	175
19-068145	BNE-6814	176
19-068565	BNE-6856	602
19-068572	*BNE-6857*	*602*
19-068633	BNE-6863	567
19-068633	BNE-6863	667
19-068633	BNE-6863	682
19-068756	BNE-6875	148
19-068756	BNE-6875	256
19-068756	BNE-6875	257
19-068756	BNE-6875	260
19-068756	BNE-6875	415
19-068756	BNE-6875	416
19-068756	BNE-6875	418
19-068756	BNE-6875	419
19-068756	BNE-6875	612
19-068756	BNE-6875	613
19-068756	BNE-6875	615
19-068756	BNE-6875	616
19-068756	BNE-6875	621
19-068763	BNE-6876	148
19-068763	BNE-6876	257
19-068763	BNE-6876	417
19-068763	BNE-6876	615
19-068848	*BNE-6884*	*475*
19-068855	BNE-6885	475
19-068862	BNE-6886	475
19-068862	BNE-6886	477
19-068879	BNE-6887	475
19-100050	BNE-A005	165
19-100050	BNE-A005	176
19-100067	BNE-A006	516
19-100180	BNE-A018	363
19-100180	BNE-A018	364
19-100180	BNE-A018	365
19-100180	BNE-A018	366
19-100180	BNE-A018	739
19-100180	BNE-A018	740
19-103044	BNE-A304	203
19-103112	BNE-A311	103
19-103112	BNE-A311	107
19-103112	BNE-A311	108
19-103150	BNE-A315	95
19-103150	BNE-A315	98
19-103150	BNE-A315	99
19-103150	BNE-A315	100
19-103150	BNE-A315	101
19-103150	BNE-A315	102
19-103150	BNE-A315	104
19-103150	BNE-A315	106
19-103150	BNE-A315	141
19-103471	BNE-A347	25
19-103471	BNE-A347	29
19-104089	BNE-A408	224
19-104089	BNE-A408	226
19-104089	BNE-A408	298
19-104096	BNE-A409	234
19-104300	BNE-A430	738
19-104300	BNE-A430	739
19-105369	BNE-A536	199
19-105369	BNE-A536	200
19-105376	BNE-A537	29
19-105895	BNE-A589	235
19-105895	BNE-A589	406
19-106120	BNE-A612	15
19-106397	BNE-A639	553
19-106397	BNE-A639	669
19-106397	BNE-A639	723
19-106625	BNE-A662	160
19-106625	BNE-A662	263
19-106625	BNE-A662	469
19-106625	BNE-A662	648
19-106632	BNE-A663	281
19-106632	BNE-A663	282
19-106649	BNE-A664	126
19-107141	BNE-A714	282
19-107141	BNE-A714	448
19-107141	BNE-A714	633
19-107141	BNE-A714	634
19-107899	BNE-A789	241
19-107899	BNE-A789	310
19-108971	BNE-A897	475
19-108971	BNE-A897	476
19-108988	BNE-A898	261
19-108988	BNE-A898	432
19-108988	BNE-A898	456
19-108988	BNE-A898	629
19-108988	BNE-A898	630
19-108988	BNE-A898	639
19-108995	BNE-A899	261
19-108995	BNE-A899	432
19-108995	BNE-A899	456
19-108995	BNE-A899	629
19-108995	BNE-A899	630
19-108995	BNE-A899	639
19-109299	BNE-A929	480
19-109299	BNE-A929	481
19-109497	BNE-A949	34
19-109497	BNE-A949	37
19-109497	BNE-A949	39
19-109510	BNE-A951	34
19-109510	BNE-A951	37
19-109510	BNE-A951	39
19-109565	BNE-A956	512
19-109565	BNE-A956	513
19-109572	BNE-A957	14
19-109572	BNE-A957	546
19-109572	BNE-A957	550
19-109572	BNE-A957	551
19-109572	BNE-A957	552
19-109572	BNE-A957	561
19-109572	BNE-A957	563
19-109572	BNE-A957	564
19-109572	BNE-A957	572
19-109572	BNE-A957	726
19-109572	BNE-A957	727
19-109589	BNE-A958	562
19-109589	BNE-A958	563
19-109589	BNE-A958	564
19-109589	BNE-A958	727
19-110547	BNE-B054	172
19-110547	BNE-B054	207
19-110547	BNE-B054	491
19-110912	BNE-B091	491
19-111131	*BNE-B113*	*596*
19-111131	*BNE-B113*	*597*
19-111131	*BNE-B113*	*598*
19-111728	BNE-B172	515
19-111780	BNE-B178	224
19-111780	BNE-B178	298
19-111797	BNE-B179	34
19-111797	BNE-B179	37
19-111797	BNE-B179	39
19-111803	BNE-B180	34
19-111803	BNE-B180	37
19-111803	BNE-B180	39
19-112763	BNE-B276	232
19-112862	BNE-B286	308
19-112862	BNE-B286	309
19-112893	BNE-B289	302
19-112893	BNE-B289	303
19-112893	BNE-B289	304
19-112893	BNE-B289	312
19-112909	*BNE-B290*	*308*
19-112909	*BNE-B290*	*309*
19-112916	*BNE-B291*	*308*
19-112916	*BNE-B291*	*309*
19-113098	BNE-B309	190
19-113098	BNE-B309	204
19-113098	BNE-B309	292
19-113128	BNE-B312	170
19-113128	BNE-B312	171
19-113128	BNE-B312	482
19-113135	BNE-B313	482
19-113135	BNE-B313	483
19-113135	BNE-B313	484
19-115351	BNE-B535	158
19-115351	BNE-B535	427
19-115351	BNE-B535	433
19-115351	BNE-B535	447
19-115351	BNE-B535	626
19-115351	BNE-B535	633
19-118703	BNE-B870	650
19-118703	BNE-B870	651
19-118758	BNE-B875	144
19-118758	BNE-B875	146
19-118758	BNE-B875	191
19-118758	BNE-B875	454
19-118758	BNE-B875	463
19-118758	BNE-B875	465
19-118758	BNE-B875	467
19-118758	BNE-B875	637
19-118758	BNE-B875	638
19-118758	BNE-B875	643
19-118758	BNE-B875	645
19-118758	BNE-B875	647
19-119205	BNE-B920	372
19-119205	BNE-B920	373
19-119328	VNE-B932	195
19-119328	VNE-B932	203
19-119335	VNE-B933	196
19-119519	BNE-B951	229
19-119526	BNE-B952	229
19-119526	BNE-B952	230
19-119526	BNE-B952	250
19-119526	BNE-B952	251
19-119526	BNE-B952	650
19-119526	BNE-B952	651
19-119526	BNE-B952	652
19-119526	BNE-B952	664
19-119922	BNE-B992	25
19-119922	BNE-B992	29
19-119922	BNE-B992	712
19-119922	BNE-B992	714
19-119939	BNE-B993	25
19-119939	BNE-B993	29
19-119939	BNE-B993	55
19-119939	BNE-B993	56
19-119939	BNE-B993	58
19-119939	BNE-B993	85
19-119939	BNE-B993	572
19-119939	BNE-B993	709
19-119939	BNE-B993	710
19-119939	BNE-B993	712
19-119939	BNE-B993	714
19-121369	BNE-C136	277
19-122472	BNE-C247	179
19-122472	BNE-C247	297
19-122472	BNE-C247	517
19-122496	BNE-C249	191
19-122496	BNE-C249	192
19-123622	BNE-C362	135
19-124551	BNE-C455	357
19-124551	BNE-C455	358
19-124568	BNE-C456	357
19-124681	BNE-C468	674
19-124681	BNE-C468	676
19-124681	BNE-C468	695
19-124681	BNE-C468	735
19-126203	BNE-C620	428
19-126203	BNE-C620	429
19-126203	BNE-C620	634
19-126203	BNE-C620	635
19-126395	BNE-C639	145
19-126395	BNE-C639	146
19-126395	BNE-C639	147
19-126395	BNE-C639	153
19-126395	BNE-C639	154
19-126395	BNE-C639	260
19-126395	BNE-C639	261
19-126395	BNE-C639	430
19-126395	BNE-C639	431
19-126395	BNE-C639	455
19-126395	BNE-C639	627
19-126395	BNE-C639	628
19-126395	BNE-C639	638
19-127439	BNE-C743	17
19-127439	BNE-C743	18
19-127439	BNE-C743	21
19-127439	BNE-C743	539
19-127439	BNE-C743	540
19-127439	BNE-C743	541
19-127439	BNE-C743	555
19-127439	BNE-C743	560
19-127439	BNE-C743	568
19-127439	BNE-C743	570
19-127439	BNE-C743	684
19-127439	BNE-C743	685
19-127439	BNE-C743	696
19-127439	BNE-C743	697
19-127439	BNE-C743	698
19-127439	BNE-C743	731
19-127439	BNE-C743	746
19-127439	BNE-C743	747
19-128146	BNE-C814	286
19-128153	BNE-C815	286
19-128160	*BNE-C816*	*278*
19-128177	*BNE-C817*	*278*
19-128191	BNE-C819	515
19-128238	BNE-C823	172
19-128238	BNE-C823	207
19-128238	BNE-C823	292
19-128238	BNE-C823	491
19-128269	BNE-C826	491
19-128290	BNE-C829	195
19-128863	BNE-C886	722
19-128863	BNE-C886	725
19-131627	*BNE-D162*	*517*
19-131689	BNE-D168	470
19-131689	BNE-D168	471
19-131689	BNE-D168	530
19-131689	BNE-D168	634
19-131702	BNE-D170	470
19-131702	BNE-D170	530
19-131702	BNE-D170	531
19-131702	BNE-D170	634
19-132327	BNE-D232	222
19-132334	BNE-D233	2
19-132334	BNE-D233	3
19-132334	BNE-D233	4
19-132341	BNE-D234	126
19-132471	BNE-D247	4
19-132495	BNE-D249	241
19-132495	BNE-D249	310
19-132501	BNE-D250	357
19-132792	BNE-D279	470
19-132792	BNE-D279	471
19-132792	BNE-D279	530
19-132792	BNE-D279	531
19-132792	BNE-D279	634
19-135021	BNE-D502	109
19-135021	BNE-D502	110
19-135021	BNE-D502	112
19-135021	BNE-D502	114
19-135021	BNE-D502	142
19-135052	BNE-D505	110
19-135052	BNE-D505	112
19-135052	BNE-D505	142
19-135069	BNE-D506	158
19-135069	BNE-D506	290
19-135076	BNE-D507	158
19-135076	BNE-D507	290
19-135083	*BNE-D508*	*273*
19-135090	BNE-D509	273
19-135106	BNE-D510	173
19-135106	BNE-D510	202
19-135106	BNE-D510	492
19-135113	BNE-D511	520
19-135113	BNE-D511	521
19-135304	BNE-D530	253
19-135304	BNE-D530	254
19-135311	BNE-D531	253
19-135311	BNE-D531	254
19-135328	BNE-D532	254
19-136592	BNE-D659	113
19-136622	BNE-D662	114
19-138381	BNE-D838	128
19-138381	BNE-D838	142
19-138404	BNE-D840	238
19-138411	BNE-D841	231
19-139333	BNE-D933	687
19-139333	BNE-D933	688
19-139333	BNE-D933	734
19-139951	BNE-D995	60
19-139951	BNE-D995	61
19-139951	BNE-D995	86
19-139968	BNE-D996	60
19-139968	BNE-D996	61
19-139968	BNE-D996	86
19-140025	BNE-E002	685
19-140032	BNE-E003	15
19-140032	BNE-E003	553
19-140032	BNE-E003	559
19-140032	BNE-E003	566
19-140032	BNE-E003	665
19-140032	BNE-E003	667
19-140032	BNE-E003	680
19-140032	BNE-E003	682
19-140032	BNE-E003	700
19-140032	BNE-E003	701
19-140032	BNE-E003	747
19-140049	BNE-E004	55
19-140049	BNE-E004	58
19-140049	BNE-E004	85
19-140049	BNE-E004	709
19-140049	BNE-E004	712
19-140049	BNE-E004	714
19-140056	BNE-E005	460
19-140056	BNE-E005	461
19-140056	BNE-E005	462
19-140056	BNE-E005	640
19-140056	BNE-E005	641
19-140056	BNE-E005	642
19-140087	BNE-E008	147
19-140087	BNE-E008	533
19-140100	BNE-E010	743
19-140100	BNE-E010	744
19-140100	BNE-E010	745
19-140100	BNE-E010	746
19-140391	BN3-E039	179
19-140391	BN3-E039	180
19-140391	BN3-E039	297
19-140391	BN3-E039	517
19-140407	BNE-E040	181
19-140407	BNE-E040	182
19-140407	BNE-E040	576
19-140414	BNE-E041	181
19-140414	BNE-E041	182
19-140414	BNE-E041	576
19-140605	BNE-E060	205
19-141619	BNE-E161	420
19-141619	BNE-E161	422
19-141619	BNE-E161	617
19-141619	BNE-E161	618
19-141626	BNE-E162	161
19-141626	BNE-E162	258
19-141626	BNE-E162	259
19-141626	BNE-E162	421
19-141626	BNE-E162	423
19-141626	BNE-E162	424
19-141626	BNE-E162	469
19-141626	BNE-E162	470
19-141626	BNE-E162	619
19-141626	BNE-E162	621
19-141626	BNE-E162	649
19-142128	BNE-E212	387
19-142135	BNE-E213	387
19-142142	BNE-E214	266
19-142142	BNE-E214	267
19-142142	BNE-E214	268
19-142173	BNE-E217	185
19-142241	BNE-E224	386
19-142258	BNE-E225	386
19-142265	BNE-E226	196
19-142265	BNE-E226	197
19-142449	BNE-E244	669
19-142449	BNE-E244	670
19-142913	BNE-E291	266
19-142913	BNE-E291	267
19-142913	BNE-E291	268
19-143026	BNE-E302	180
19-143026	BNE-E302	518
19-144221	BNE-E422	88
19-144238	BNE-E423	88
19-144948	BNE-E494	271
19-144948	BNE-E494	272
19-145266	BNE-E526	115
19-145297	*BNE-E529*	*115*
19-145563	BNE-E556	66
19-145563	BNE-E556	67
19-145570	BNE-E557	15
19-145570	BNE-E557	66
19-145570	BNE-E557	67
19-145570	BNE-E557	553
19-145570	BNE-E557	559
19-145570	BNE-E557	680
19-145686	BNE-E568	289
19-145747	BNE-E574	127
19-145754	BNE-E575	246
19-146119	BNE-E611	246
19-146119	BNE-E611	247
19-146171	BNE-E617	488
19-146171	BNE-E617	489
19-146188	BNE-E618	488
19-146188	BNE-E618	489
19-146782	BNE-E678	267
19-146782	BNE-E678	268
19-146799	BNE-E679	267
19-146973	BNE-E697	435
19-146973	BNE-E697	631
19-146980	BNE-E698	435
19-146980	BNE-E698	631
19-147024	BNE-E702	596
19-147024	BNE-E702	597
19-147024	BNE-E702	598
19-147093	BNE-E709	534
19-147291	BNE-E729	231
19-147291	BNE-E729	653
19-147659	BNE-E765	167
19-147659	BNE-E765	473
19-147659	BNE-E765	585
19-148519	BN8-E851	158
19-148519	BN8-E851	447
19-148519	BN8-E851	448
19-148519	BN8-E851	633
19-151069	BNE-F106	573
19-151069	BNE-F106	574
19-151069	BNE-F106	693
19-151069	BNE-F106	716
19-151069	BNE-F106	718
19-151069	BNE-F106	719
19-151069	BNE-F106	720
19-151069	BNE-F106	746
19-151083	BNE-F108	573
19-151083	BNE-F108	574
19-151083	BNE-F108	716
19-151083	BNE-F108	718
19-151083	BNE-F108	719
19-151083	BNE-F108	720
19-151083	BNE-F108	746
19-151113	BNE-F111	601
19-151793	BNE-F179	278
19-152608	BNE-F260	287
19-152615	BNE-F261	406
19-152615	BNE-F261	471
19-152615	BNE-F261	530
19-152615	BNE-F261	648
19-152622	*BNE-F262*	*288*
19-152639	*BNE-F263*	*288*
19-152646	BNE-F264	288
19-152769	BNE-F276	89
19-152769	BNE-F276	90
19-152790	BNE-F279	89
19-152790	BNE-F279	90
19-153681	BNE-F368	287
19-153681	BNE-F368	288
19-155876	BNE-F587	522
19-155876	BNE-F587	523
19-156316	BNE-F631	384
19-156316	BNE-F631	385
19-156545	BNE-F654	297
19-156545	BNE-F654	407
19-156545	BNE-F654	581

New order number – Old order number

New	Old	Page
19-156545	BNE-F654	582
19-156545	BNE-F654	603
19-156699	BNE-F669	672
19-158150	BNE-F815	602
19-158198	BNE-F819	396
19-158464	BNE-F846	310
19-158495	BNE-F849	200
19-158495	BNE-F849	201
19-158495	BNE-F849	434
19-158495	BNE-F849	630
19-158495	BNE-F849	631
19-158686	BNE-F868	579
19-158693	BNE-F869	194
19-158693	BNE-F869	292
19-158761	BNE-F876	275
19-158778	BNE-F877	599
19-158785	BNE-F878	599
19-158839	BNE-F883	137
19-158884	BNE-F888	293
19-158945	BNE-F894	42
19-158945	BNE-F894	46
19-158945	BNE-F894	84
19-158945	BNE-F894	547
19-158952	BNE-F895	42
19-158952	BNE-F895	46
19-158952	BNE-F895	84
19-158952	BNE-F895	547
19-158969	BNE-F896	478
19-158976	BNE-F897	478
19-158976	BNE-F897	479
19-158983	BNE-F898	137
19-158983	BNE-F898	138
19-164472	BNE-G447	43
19-164472	BNE-G447	84
19-164472	BNE-G447	547
19-164489	BNE-G448	43
19-164489	BNE-G448	84
19-164489	BNE-G448	547
19-164588	BNE-G458	397
19-164687	BNE-G468	601
19-164786	BNE-G478	248
19-164786	BNE-G478	249
19-164915	BNE-G491	672
19-165349	BNE-G534	385
19-165479	BNE-G547	274
19-165486	BNE-G548	274
19-165530	BNE-G553	248
19-165530	BNE-G553	249
19-165530	BNE-G553	250
19-165547	BNE-G554	192
19-165554	BNE-G555	268
19-165646	BNE-G564	267
19-165967	BNE-G596	187
19-165998	BNE-G599	235
19-165998	BNE-G599	312
19-166278	BNE-G627	380
19-166278	BNE-G627	575
19-166384	BNE-G638	181
19-166384	BNE-G638	522
19-166445	BNE-G644	398
19-166452	BNE-G645	584
19-166766	BNE-G676	267
19-167046	BNE-G704	395
19-167060	BNE-G706	514
19-167084	BNE-G708	522
19-167367	BNE-G736	398
19-167985	BNE-G798	366
19-167985	BNE-G798	367
19-167985	BNE-G798	739
19-167985	BNE-G798	740
19-168203	BNE-G820	524
19-168210	BNE-G821	584
19-168210	BNE-G821	597
19-168388	BNE-G838	296
19-168432	BNE-G843	600
19-168487	BNE-G848	580
19-168494	BNE-G849	580
19-168555	BNE-G855	296
19-168685	BNE-G868	175
19-168685	BNE-G868	176
19-168784	BNE-G878	407
19-168784	BNE-G878	578
19-168784	BNE-G878	580
19-168784	BNE-G878	583
19-168784	BNE-G878	603
19-169163	BNE-G916	370
19-169163	BNE-G916	371
19-169163	BNE-G916	737
19-169163	BNE-G916	738
19-169200	BNE-G920	7
19-169200	BNE-G920	9
19-169200	BNE-G920	12
19-169262	BNE-G926	157
19-169262	BNE-G926	181
19-169279	BNE-G927	368
19-169279	BNE-G927	369
19-169279	BNE-G927	370
19-169279	BNE-G927	737
19-169279	BNE-G927	738
19-169538	BNE-G953	7
19-169538	BNE-G953	9
19-169538	BNE-G953	12
19-169965	BNE-G996	287
19-169965	BNE-G996	288
19-170084	BNE-H008	68
19-170084	BNE-H008	69
19-170206	BNE-H020	233
19-170206	BNE-H020	239
19-170206	BNE-H020	245
19-170206	BNE-H020	251
19-170206	BNE-H020	655
19-170206	BNE-H020	664
19-170381	BNE-H038	484
19-170428	BNE-H042	203
19-170428	BNE-H042	581
19-170732	BNE-H073	733
19-170749	BNE-H074	250
19-171203	BNE-H120	173
19-171203	BNE-H120	202
19-171203	BNE-H120	492
19-171203	BNE-H120	493
19-171395	BNE-H139	517
19-171456	BNE-H145	523
19-171579	BNE-H157	368
19-171579	BNE-H157	369
19-171579	BNE-H157	370
19-171579	BNE-H157	737
19-171579	BNE-H157	738
19-171586	BNE-H158	374
19-171586	BNE-H158	375
19-171586	BNE-H158	376
19-171593	BNE-H159	47
19-171593	BNE-H159	49
19-171593	BNE-H159	50
19-171593	BNE-H159	51
19-171593	BNE-H159	65
19-171593	BNE-H159	84
19-171593	BNE-H159	86
19-171609	BNE-H160	47
19-171609	BNE-H160	49
19-171609	BNE-H160	50
19-171609	BNE-H160	51
19-171609	BNE-H160	65
19-171609	BNE-H160	84
19-171609	BNE-H160	86
19-171616	BNE-H161	47
19-171616	BNE-H161	49
19-171616	BNE-H161	50
19-171616	BNE-H161	51
19-171616	BNE-H161	85
19-171623	BNE-H162	47
19-171623	BNE-H162	49
19-171623	BNE-H162	50
19-171623	BNE-H162	51
19-171623	BNE-H162	85
19-171814	BNE-H181	250
19-172644	BNE-H264	248
19-172644	BNE-H264	249
19-172644	BNE-H264	250
19-172651	BNE-H265	248
19-172651	BNE-H265	249
19-172651	BNE-H265	250
19-172682	BNE-H268	167
19-172682	BNE-H268	385
19-172682	BNE-H268	491
19-172743	BNE-H274	134
19-172859	BNE-H285	11
19-172903	BNE-H290	397
19-172903	BNE-H290	406
19-172910	BNE-H291	397
19-172910	BNE-H291	406
19-172996	BNE-H299	24
19-172996	BNE-H299	692
19-173177	BNE-H317	387
19-173559	BNE-H355	288
19-173580	BNE-H358	274
19-174204	BNE-H420	401
19-174204	BNE-H420	402
19-174211	BNE-H421	275
19-181424	*BNE-6296*	*276*
19-182841		235
19-183398		179
19-183398		212
19-183398		213
19-183398		495
19-183459		280
19-183473		280
19-183558		278
19-183558		280
19-183565		278
19-183565		280
19-183572		278
19-183572		280
19-183633		156
19-183633		161
19-183633		262
19-183633		263
19-183633		425
19-183633		470
19-183633		619
19-183633		620
19-183633		649
19-183664		146
19-183664		435
19-183664		436
19-183664		437
19-183664		632
19-183749		574
19-183749		689
19-183749		691
19-183862	BNE-H834	134
19-183862	BNE-H834	143
19-183916		138
19-184050	BNE-H837	25
19-184050	BNE-H837	29
19-184067	BNE-H887	56
19-184067	BNE-H887	58
19-184074	BNE-H817	136
19-184081	BNE-H816	136
19-184098	BNE-H818	136
19-184104		209
19-184104		210
19-184128		280
19-184135		280
19-184142		387
19-184180		*598*
19-189291		173
19-189291		193
19-189291		201
19-189291		492
19-189666	VN3-H554	733
19-189673	VN3-H555	733
19-189680	VN3-H556	733
19-189697	VN3-H011	733
19-189703	VN3-H012	733
19-189710	VN3-G617	733
19-193298		127
19-193298		129
19-193298		143
19-193304		127
19-193304		129
19-193304		143
19-193311		127
19-193311		143
19-193328		129
19-193359		532
19-193441		169
19-193441		172
19-193465		521
19-193472		484
19-193564	BNE-6112	285
19-194172		484
19-194448		65
19-194455		65
19-194462		733
19-194479		733
19-194486		733
19-194493		171
19-194493		172
19-194509		171
19-194509		172
19-194523		157
19-194875		510
19-194882		510
19-194899		510
19-195322		9
19-195339		127
19-195346		127
19-195353		127
19-196299		234
19-196312		562
19-196350		278
19-196350		279
19-196862		539
19-196862		732
19-197135		287
19-197210		196
19-197227		197
19-197227		235
19-197302		304
19-197692		135
19-197791		395
19-199511		104
19-199511		106
19-212647		388
19-212722		128
19-213156		135
19-213729		377
19-213736		377
19-213767		406
19-213767		516
19-213798		448
19-213798		633
19-213828		275
19-213859		385
19-214108		274
19-214221		*296*
19-214252		387
19-214269		387
19-214276		387
19-214405		296
19-214481		280
19-214498		*280*
19-214634		288
19-214641		518
19-214658	BNE-G746	531
19-215693		600
19-215976		374
19-215983		374
19-215990		374
19-215990		375
19-215990		376
19-215990		377
19-216003		374
19-216003		377
19-216942		196
19-216966		741
19-216973		705
19-216973		707
19-216980		294
19-217000		294
19-217154		232
19-217161		232
19-217468		741
19-217994		90
19-218014		90
19-218458		278
19-218939		134
19-219189		65
19-220079		116
19-220093		117
19-220598		102
19-220970		130
19-221519		280
19-223025		167
19-223025		168
19-223025		491
19-223322		517
19-226651		16
20-070007	BA5-7000	154
20-070007	BA5-7000	155
20-070014	BA5-7001	154
20-070014	BA5-7001	155
20-070274	BA5-7027	155
20-070281	BA5-7028	155
20-070434	BA3-7043	284
20-070441	BA5-7044	284
20-070502	BA3-7050	284
20-070519	BA5-7051	284
20-070540	BA5-7054	284
20-070557	BA5-7055	284
20-070632	BA5-7063	283
20-070649	BA5-7064	283
20-070748	BA5-7074	283
20-070779	BA5-7077	283
20-070816	BA5-7081	284
20-070823	BA5-7082	284
20-070830	BA5-7083	284
20-070847	BA5-7084	284
20-070854	BA5-7085	283
20-070861	BA3-7086	349
20-070878	BA3-7087	349
20-070885	BA5-7088	283
20-070915	BA3-7091	347
20-101893	BA3-A189	347
20-109097	BA3-A909	333
20-114411	BA5-B441	284
20-114428	BA5-B442	284
20-114428	BA5-B442	285
20-114435	BA5-B443	285
20-114497	BA5-B449	284
20-114503	BA5-B450	284
20-114510	BA5-B451	285
20-114527	BA5-B452	285
20-146078	BA5-E607	295
20-146085	BA5-G650	295
20-146092	BA5-G651	295
21-030246	PNE-3024	120
21-030246	PNE-3024	121
21-030253	PNE-3025	120
21-030260	PNE-3026	255
21-030260	PNE-3026	410
21-030260	PNE-3026	411
21-030260	PNE-3026	412
21-030260	PNE-3026	413
21-030260	PNE-3026	414
21-030260	PNE-3026	608
21-030260	PNE-3026	609
21-030260	PNE-3026	610
21-030260	PNE-3026	611
21-030260	PNE-3026	620
21-030314	PNE-3031	656
21-030314	PNE-3031	657
21-030314	PNE-3031	658
21-030338	PNE-3033	668
21-030338	PNE-3033	673
21-030338	PNE-3033	695
21-030338	PNE-3033	730
21-030338	PNE-3033	731
21-030345	PNE-3034	69
21-030345	PNE-3034	671
21-030345	PNE-3034	720
21-030345	PNE-3034	721
21-030376	*PNE-3037*	*427*
21-030376	*PNE-3037*	*448*
21-030376	*PNE-3037*	*453*
21-030376	*PNE-3037*	*622*
21-030376	*PNE-3037*	*637*
21-030376	*PNE-3037*	*648*
21-030383	*PNE-3038*	*589*
21-030383	*PNE-3038*	*590*
21-030383	*PNE-3038*	*591*
21-030390	PNE-3039	52
21-030390	PNE-3039	53
21-030390	PNE-3039	54
21-030390	PNE-3039	63
21-030390	PNE-3039	77
21-030390	PNE-3039	78
21-030390	PNE-3039	79
21-030390	PNE-3039	80
21-030390	PNE-3039	81
21-030390	PNE-3039	82
21-030390	PNE-3039	83
21-030390	PNE-3039	84
21-030406	PNE-3040	70
21-030406	PNE-3040	71
21-030406	PNE-3040	72
21-030406	PNE-3040	75
21-030406	PNE-3040	701
21-030406	PNE-3040	702
21-030406	PNE-3040	703
21-030406	PNE-3040	704
21-030406	PNE-3040	728
21-030406	PNE-3040	729
21-030413	PNE-3041	181
21-030413	PNE-3041	182
21-030413	PNE-3041	183
21-030413	PNE-3041	254
21-030413	PNE-3041	439
21-030413	PNE-3041	440
21-030413	PNE-3041	441
21-030413	PNE-3041	442
21-030413	PNE-3041	444
21-030413	PNE-3041	445
21-030413	PNE-3041	446
21-030413	PNE-3041	604
21-030413	PNE-3041	605
21-030413	PNE-3041	606
21-030413	PNE-3041	607
21-030413	PNE-3041	608
21-030420	PNE-3042	91
21-030437	*PNE-3043*	*409*
21-030437	*PNE-3043*	*624*
21-030444	PNE-3044	71
21-030444	PNE-3044	72
21-030444	PNE-3044	73
21-030444	PNE-3044	74
21-030444	PNE-3044	75
21-030444	PNE-3044	76
21-030468	PNE-3046	674
21-030468	PNE-3046	695
21-030475	PNE-3047	163
21-030475	PNE-3047	174
21-030475	PNE-3047	472
21-030499	PNE-3049	92
21-030499	PNE-3049	93
21-030505	PNE-3050	92
21-030505	PNE-3050	93
21-030505	PNE-3050	94
21-030505	PNE-3050	136
21-030512	PNE-3051	119
21-030512	PNE-3051	130
21-030529	PNE-3052	262
21-030529	PNE-3052	426
21-030529	PNE-3052	457
21-030529	PNE-3052	459
21-030529	PNE-3052	622
21-030529	PNE-3052	624
21-030529	PNE-3052	625
21-030536	PNE-3053	660
21-030543	PNE-3054	659
21-030543	PNE-3054	660
21-030543	PNE-3054	661
21-030543	PNE-3054	662
21-030543	PNE-3054	663
21-030550	PNE-3055	290
21-030567	*PNE-3056*	*585*
21-030567	*PNE-3056*	*589*
21-031090	*PNE-3109*	*585*
21-031120	PNE-3112	132
21-031137	PNE-3113	132
21-031144	PNE-3114	132
21-031182	PNE-3118	120
21-031182	PNE-3118	121
21-031182	PNE-3118	123
21-031199	PNE-3119	120
21-031199	PNE-3119	121
21-031199	PNE-3119	123
21-031267	PNE-3126	537
21-031274	PNE-3127	537

New order number – Old order number

New	Old	Page
21-031359	PNE-3135	591
21-031359	PNE-3135	592
21-031359	PNE-3135	593
21-031366	PNE-3136	586
21-031373	PNE-3137	592
21-031373	PNE-3137	593
21-031380	PNE-3138	591
21-031380	PNE-3138	592
21-031380	PNE-3138	593
21-031397	PNE-3139	586
21-031410	PNE-3141	587
21-031410	PNE-3141	588
21-031410	PNE-3141	589
21-031434	PNE-3143	590
21-031441	PNE-3144	395
21-031465	PNE-3146	288
21-031465	PNE-3146	289
21-031502	PNE-3150	705
21-031502	PNE-3150	707
21-031502	PNE-3150	730
21-031519	PNE-3151	390
21-193347		532
21-216381		92
21-216381		93
22-001856	V36-0185	334
22-001856	V36-0185	335
22-001856	V36-0185	339
22-001856	V36-0185	340
22-001900	V36-0190	339
22-001900	V36-0190	341
22-001917	V36-0191	334
22-001917	V36-0191	335
22-001917	V36-0191	340
22-001924	V36-0192	317
22-001993	V36-0199	316
22-002006	V36-0200	316
22-002327	V36-0232	356
22-003614	V36-0361	334
22-003614	V36-0361	335
22-003614	V36-0361	339
22-003614	V36-0361	340
22-003614	V36-0361	341
22-003621	V36-0362	316
22-003645	V36-0364	356
22-003652	V36-0365	317
22-003652	V36-0365	335
22-003652	V36-0365	336
22-003652	V36-0365	339
22-003652	V36-0365	340
22-003652	V36-0365	341
22-003737	V36-0373	549
22-003737	V36-0373	558
22-003737	V36-0373	676
22-003737	V36-0373	679
22-003737	V36-0373	736
22-003799	V36-0379	95
22-003799	V36-0379	98
22-003805	V36-0380	95
22-003805	V36-0380	98
22-003812	V36-0381	95
22-003812	V36-0381	98
22-003829	V36-0382	95
22-003829	V36-0382	98
22-004062	V36-0406	705
22-004062	V36-0406	707
22-004062	V36-0406	730
22-031167	PNE-3116	25
22-031167	PNE-3116	29
22-031167	PNE-3116	55
22-031167	PNE-3116	56
22-031167	PNE-3116	58
22-031167	PNE-3116	85
22-031167	PNE-3116	708
22-031167	PNE-3116	710
22-031204	PNE-3120	448
22-031204	PNE-3120	449
22-031204	PNE-3120	453
22-031204	PNE-3120	623
22-031204	PNE-3120	637
22-040039	V36-4003	206
22-040039	V36-4003	207
22-040039	V36-4003	291
22-040046	V36-4004	177
22-040053	V36-4005	177
22-040077	V36-4007	95
22-040077	V36-4007	97
22-040077	V36-4007	98
22-040077	V36-4007	100
22-040084	V36-4008	95
22-040084	V36-4008	97
22-040084	V36-4008	98
22-040084	V36-4008	100
22-040091	V36-4009	96
22-040091	V36-4009	97
22-040091	V36-4009	100
22-040091	V36-4009	101
22-040091	V36-4009	137
22-040107	V36-4010	96
22-040107	V36-4010	97
22-040107	V36-4010	100
22-040107	V36-4010	101
22-040107	V36-4010	137
22-040213	V36-4021	177
22-040220	V36-4022	177
22-040251	V36-4025	526
22-040251	V36-4025	527
22-040251	V36-4025	528
22-040251	V36-4025	529
22-040374	V36-4037	2
22-040374	V36-4037	3
22-040374	V36-4037	5
22-040381	V36-4038	2
22-040381	V36-4038	3
22-040381	V36-4038	5
22-040398	V36-4039	206
22-040398	V36-4039	207
22-040398	V36-4039	291
22-040534	V36-4053	334
22-040534	V36-4053	335
22-040534	V36-4053	339
22-040534	V36-4053	340
22-040534	V36-4053	341
22-040589	V36-4058	705
22-040589	V36-4058	707
22-040589	V36-4058	729
22-040589	V36-4058	730
22-040657	VNE-4065	177
22-040657	VNE-4065	479
22-040657	VNE-4065	480
22-040657	VNE-4065	481
22-040664	VNE-4066	177
22-040664	VNE-4066	479
22-040664	VNE-4066	480
22-040664	VNE-4066	481
22-040671	VNE-4067	176
22-040671	VNE-4067	177
22-040688	VNE-4068	176
22-040688	VNE-4068	177
22-040695	VNE-4069	490
22-040701	VNE-4070	490
22-040718	VNE-4071	242
22-040756	VNE-4075	202
22-040756	VNE-4075	557
22-040763	VNE-4076	201
22-040763	VNE-4076	202
22-040763	VNE-4076	548
22-040763	VNE-4076	556
22-040763	VNE-4076	557
22-040770	VNE-4077	222
22-040794	VNE-4079	208
22-040794	VNE-4079	209
22-040794	VNE-4079	747
22-040855	VNE-4085	214
22-040855	VNE-4085	215
22-040862	VNE-4086	214
22-040862	VNE-4086	215
22-040862	VNE-4086	216
22-040862	VNE-4086	240
22-040879	VNE-4087	196
22-040879	VNE-4087	556
22-040879	VNE-4087	557
22-040886	VNE-4088	222
22-040893	VNE-4089	214
22-040893	VNE-4089	215
22-040893	VNE-4089	216
22-040893	VNE-4089	240
22-040909	VNE-4090	145
22-040909	VNE-4090	146
22-040909	VNE-4090	147
22-040909	VNE-4090	153
22-040909	VNE-4090	154
22-040909	VNE-4090	260
22-040909	VNE-4090	261
22-040909	VNE-4090	427
22-040909	VNE-4090	428
22-040909	VNE-4090	429
22-040909	VNE-4090	430
22-040909	VNE-4090	431
22-040909	VNE-4090	455
22-040909	VNE-4090	626
22-040909	VNE-4090	627
22-040909	VNE-4090	628
22-040909	VNE-4090	634
22-040909	VNE-4090	635
22-040909	VNE-4090	638
22-040909	VNE-4090	639
22-040916	VNE-4091	167
22-040916	VNE-4091	174
22-040916	VNE-4091	473
22-040916	VNE-4091	474
22-040916	VNE-4091	485
22-040923	VNE-4092	548
22-040923	VNE-4092	556
22-040923	VNE-4092	557
22-040930	VNE-4093	201
22-040930	VNE-4093	202
22-040954	VNE-4095	222
22-040961	VNE-4096	243
22-040961	VNE-4096	244
22-040992	VNE-4099	188
22-040992	VNE-4099	189
22-041005	VNE-4100	206
22-041005	VNE-4100	207
22-041012	VNE-4101	223
22-041012	VNE-4101	225
22-041029	VNE-4102	243
22-041029	VNE-4102	244
22-041029	VNE-4102	245
22-041043	VNE-4104	174
22-041043	VNE-4104	473
22-041043	VNE-4104	474
22-041043	VNE-4104	485
22-041050	VNE-4105	174
22-041050	VNE-4105	473
22-041050	VNE-4105	474
22-041050	VNE-4105	485
22-041067	VNE-4106	658
22-041081	VNE-4108	526
22-041081	VNE-4108	527
22-041081	VNE-4108	528
22-041081	VNE-4108	529
22-041128	VNE-4112	511
22-041135	VNE-4113	216
22-041135	VNE-4113	217
22-041135	VNE-4113	218
22-041135	VNE-4113	219
22-041135	VNE-4113	222
22-041135	VNE-4113	240
22-041142	VNE-4114	543
22-041142	VNE-4114	548
22-041142	VNE-4114	558
22-041142	VNE-4114	674
22-041142	VNE-4114	676
22-041142	VNE-4114	678
22-041142	VNE-4114	695
22-041142	VNE-4114	735
22-041159	VNE-4115	216
22-041159	VNE-4115	217
22-041159	VNE-4115	218
22-041159	VNE-4115	219
22-041159	VNE-4115	220
22-041159	VNE-4115	222
22-041159	VNE-4115	240
22-041166	VNE-4116	511
22-041173	VNE-4117	208
22-041180	VNE-4118	548
22-041180	VNE-4118	556
22-041210	VNE-4121	556
22-041210	VNE-4121	557
22-041234	VNE-4123	670
22-041234	VNE-4123	705
22-041234	VNE-4123	707
22-041234	VNE-4123	730
22-041241	VNE-4124	223
22-041241	VNE-4124	225
22-041258	VNE-4125	531
22-041265	VNE-4126	531
22-041296	V36-4129	218
22-041296	V36-4129	243
22-041296	V36-4129	244
22-041296	V36-4129	245
22-041302	V36-4130	244
22-041302	V36-4130	245
22-041364	V36-4136	722
22-041364	V36-4136	724
22-041364	V36-4136	725
22-041371	V36-4137	722
22-041371	V36-4137	724
22-041371	V36-4137	725
22-041401	VN3-4140	191
22-041760	VN3-4176	356
22-041852	VN3-4185	188
22-041852	VN3-4185	189
22-041982	VN3-4198	188
22-041982	VN3-4198	189
22-042552	VN7-4255	197
22-042552	VN7-4255	198
22-042569	VN7-4256	197
22-042569	VN7-4256	198
22-042750	VN7-4275	187
22-042767	VN7-4276	187
22-043016	VN3-4301	189
22-043023	VN3-4302	190
22-043085	VN3-4308	706
22-043085	VN3-4308	707
22-043085	VN3-4308	730
22-043092	VN3-4309	706
22-043092	VN3-4309	707
22-043092	VN3-4309	708
22-043092	VN3-4309	729
22-043092	VN3-4309	730
22-043313	VN7-4331	224
22-043313	VN7-4331	241
22-043320	VN7-4332	234
22-043337	VN7-4333	241
22-043344	VN7-4334	102
22-043344	VN7-4334	105
22-043344	VN7-4334	106
22-043344	VN7-4334	108
22-043351	VN7-4335	102
22-043351	VN7-4335	105
22-043351	VN7-4335	106
22-043351	VN7-4335	108
22-043375	VN7-4337	518
22-043375	VN7-4337	519
22-043542	VN7-4354	220
22-043542	VN7-4354	221
22-043559	VN7-4355	234
22-043696	VN7-4369	519
22-043825	VN7-4382	220
22-043825	VN7-4382	221
22-043832	VN7-4383	102
22-043832	VN7-4383	103
22-043832	VN7-4383	105
22-043832	VN7-4383	106
22-043849	VN7-4384	102
22-043849	VN7-4384	103
22-043849	VN7-4384	105
22-043849	VN7-4384	106
22-044099	VN2-4409	314
22-044105	VN2-4410	314
22-044150	VNE-4415	95
22-044150	VNE-4415	98
22-044167	VNE-4416	95
22-044167	VNE-4416	98
22-044174	VNE-4417	95
22-044174	VNE-4417	98
22-044181	VNE-4418	95
22-044181	VNE-4418	98
22-044198	VNE-4419	95
22-044198	VNE-4419	97
22-044198	VNE-4419	98
22-044198	VNE-4419	99
22-044198	VNE-4419	101
22-044204	VNE-4420	95
22-044204	VNE-4420	97
22-044204	VNE-4420	98
22-044204	VNE-4420	99
22-044204	VNE-4420	101
22-044389	VN3-4438	124
22-044389	VN3-4438	126
22-044396	VN3-4439	125
22-044402	VN3-4440	124
22-044402	VN3-4440	126
22-044419	VN3-4441	124
22-044419	VN3-4441	126
22-044587	VNE-4458	585
22-044587	VNE-4458	586
22-044761	VNE-4476	542
22-044761	VNE-4476	553
22-044761	VNE-4476	558
22-044761	VNE-4476	669
22-044761	VNE-4476	700
22-044761	VNE-4476	723
22-044761	VNE-4476	725
22-044792	VNE-4479	523
22-044808	VNE-4480	450
22-044808	VNE-4480	451
22-044808	VNE-4480	636
22-044815	VNE-4481	396
22-044822	VNE-4482	396
22-044839	VNE-4483	191
22-044839	VNE-4483	203
22-044969	VNE-4496	403
22-044976	VNE-4497	403
22-044983	VNE-4498	403
22-044990	VNE-4499	403
22-045010	VNE-4501	543
22-045010	VNE-4501	544
22-045010	VNE-4501	545
22-045010	VNE-4501	546
22-045010	VNE-4501	548
22-045010	VNE-4501	549
22-045010	VNE-4501	553
22-045010	VNE-4501	558
22-045010	VNE-4501	676
22-045010	VNE-4501	678
22-045010	VNE-4501	679
22-045010	VNE-4501	683
22-045010	VNE-4501	722
22-045010	VNE-4501	725
22-045010	VNE-4501	736
22-045027	VNE-4502	543
22-045027	VNE-4502	545
22-045027	VNE-4502	548
22-045027	VNE-4502	558
22-045027	VNE-4502	670
22-045027	VNE-4502	676
22-045027	VNE-4502	678
22-045027	VNE-4502	724
22-045027	VNE-4502	735
22-045034	VNE-4503	133
22-045041	VNE-4504	133
22-045072	VNE-4507	379
22-045089	VNE-4508	379
22-045089	VNE-4508	382
22-045119	VNE-4511	305
22-045126	VNE-4512	305
22-045133	VNE-4513	305
22-045461	VNE-4546	2
22-045461	VNE-4546	3
22-045461	VNE-4546	4
22-045478	VNE-4547	293
22-045485	VNE-4548	197
22-045485	VNE-4548	198
22-045492	VNE-4549	197
22-045508	VNE-4550	188
22-045508	VNE-4550	189
22-045515	VNE-4551	234
22-045522	VNE-4552	223
22-045522	VNE-4552	225
22-045546	VNE-4554	224
22-045546	VNE-4554	225
22-045546	VNE-4554	226
22-045546	VNE-4554	298
22-045553	VNE-4555	224
22-045553	VNE-4555	226
22-045553	VNE-4555	298
22-045560	VNE-4556	220
22-045560	VNE-4556	221
22-045560	VNE-4556	223
22-045584	VNE-4558	235
22-045584	VNE-4558	236
22-045607	VNE-4560	235
22-045607	VNE-4560	236
22-045614	VNE-4561	236
22-045614	VNE-4561	237
22-045614	VNE-4561	251
22-045621	VNE-4562	235
22-045621	VNE-4562	236
22-045621	VNE-4562	237
22-045621	VNE-4562	251
22-045638	VNE-4563	381
22-045669	VNE-4566	165
22-045669	VNE-4566	167
22-045669	VNE-4566	175
22-045669	VNE-4566	176
22-045669	VNE-4566	479
22-045669	VNE-4566	493
22-045676	VNE-4567	165
22-045676	VNE-4567	167
22-045676	VNE-4567	175
22-045676	VNE-4567	176
22-045676	VNE-4567	479
22-045676	VNE-4567	493
22-045683	VNE-4568	485
22-045683	VNE-4568	486
22-045706	VNE-4570	537
22-045706	VNE-4570	538
22-045713	VNE-4571	537
22-045713	VNE-4571	538
22-045720	VNE-4572	564
22-045720	VNE-4572	565
22-045737	VNE-4573	565
22-045744	VNE-4574	15
22-045744	VNE-4574	553
22-045744	VNE-4574	559
22-045744	VNE-4574	566
22-045744	VNE-4574	567
22-045744	VNE-4574	665
22-045744	VNE-4574	667
22-045744	VNE-4574	680
22-045744	VNE-4574	682
22-045744	VNE-4574	700
22-045744	VNE-4574	701
22-045744	VNE-4574	747
22-045751	VNE-4575	15
22-045751	VNE-4575	16
22-045751	VNE-4575	553
22-045751	VNE-4575	559
22-045751	VNE-4575	566
22-045751	VNE-4575	665
22-045751	VNE-4575	667
22-045751	VNE-4575	680
22-045751	VNE-4575	682
22-045751	VNE-4575	700
22-045751	VNE-4575	701
22-045768	VNE-4576	705
22-045768	VNE-4576	707
22-045768	VNE-4576	729
22-045768	VNE-4576	730
22-045799	VNE-4579	653
22-045799	VNE-4579	654
22-045799	VNE-4579	661
22-045874	VNE-4587	460
22-045874	VNE-4587	461
22-045874	VNE-4587	462
22-045874	VNE-4587	640
22-045874	VNE-4587	641
22-045874	VNE-4587	642
22-045881	VNE-4588	460
22-045881	VNE-4588	461
22-045881	VNE-4588	462
22-045881	VNE-4588	640
22-045881	VNE-4588	641
22-045881	VNE-4588	642
22-045942	VNE-4594	291
22-045959	VNE-4595	167
22-045959	VNE-4595	479
22-045959	VNE-4595	480

New order number – Old order number

New	Old	Page
22-045959	VNE-4595	481
22-045959	VNE-4595	493
22-045966	VNE-4596	167
22-045966	VNE-4596	479
22-045966	VNE-4596	480
22-045966	VNE-4596	481
22-045966	VNE-4596	493
22-046123	VN7-4612	501
22-046123	VN7-4612	502
22-046123	VN7-4612	503
22-046130	VN7-4613	501
22-046130	VN7-4613	502
22-046130	VN7-4613	503
22-046215	VN7-4621	508
22-046222	VN3-4622	508
22-046239	VN7-4623	508
22-046246	VN3-4624	508
22-046390	VNE-4639	293
22-046734	VNE-4673	172
22-046734	VNE-4673	173
22-046734	VNE-4673	202
22-046734	VNE-4673	207
22-046734	VNE-4673	293
22-046734	VNE-4673	491
22-046734	VNE-4673	492
22-046741	VNE-4674	193
22-046758	VNE-4675	195
22-046765	VNE-4676	194
22-046765	VNE-4676	195
22-046772	VNE-4677	191
22-046772	VNE-4677	292
22-046789	VNE-4678	191
22-046789	VNE-4678	292
22-046796	VNE-4679	233
22-046796	VNE-4679	538
22-046796	VNE-4679	732
22-046802	VNE-4680	378
22-046802	VNE-4680	650
22-046802	VNE-4680	651
22-046819	VNE-4681	378
22-046819	VNE-4681	650
22-046819	VNE-4681	651
22-046826	VNE-4682	487
22-046826	VNE-4682	488
22-046833	VNE-4683	487
22-046833	VNE-4683	488
22-046840	VNE-4684	518
22-046840	VNE-4684	519
22-046857	VNE-4685	519
22-046864	VNE-4686	516
22-046871	VNE-4687	516
22-046888	VNE-4688	516
22-047281	VNE-4728	268
22-047281	VNE-4728	274
22-047298	VNE-4729	268
22-047298	VNE-4729	274
22-047304	VNE-4730	273
22-047304	VNE-4730	531
22-047311	VNE-4731	273
22-047311	VNE-4731	531
22-047328	VNE-4732	277
22-047328	VNE-4732	278
22-047328	VNE-4732	279
22-047335	VNE-4733	277
22-047335	VNE-4733	278
22-047335	VNE-4733	279
22-047342	VNE-4734	276
22-047342	VNE-4734	277
22-047359	VNE-4735	276
22-047359	VNE-4735	277
22-047366	VNE-4736	279
22-047373	VNE-4737	287
22-047373	VNE-4737	297
22-047380	VNE-4738	287
22-047380	VNE-4738	297
22-047397	VNE-4739	298
22-047410	VNE-4741	299
22-047427	VNE-4742	299
22-047441	VNE-4744	299
22-047441	VNE-4744	300
22-047472	VNE-4747	300
22-047472	VNE-4747	301
22-047472	VNE-4747	302
22-047489	VNE-4748	300
22-047489	VNE-4748	301
22-047489	VNE-4748	302
22-047571	VNE-4757	305
22-047571	VNE-4757	306
22-047588	VNE-4758	305
22-047588	VNE-4758	306
22-047595	VNE-4759	305
22-047601	VNE-4760	305
22-047625	VNE-4762	306
22-047625	VNE-4762	307
22-047625	VNE-4762	311
22-047632	VNE-4763	306
22-047632	VNE-4763	307
22-047649	VNE-4764	306
22-047649	VNE-4764	307
22-047656	VNE-4765	301
22-047663	VNE-4766	301
22-047670	VNE-4767	301
22-047687	VNE-4768	301
22-047724	VNE-4772	307
22-047724	VNE-4772	308
22-047755	VNE-4775	378
22-047762	VNE-4776	378
22-047786	VNE-4778	384
22-047816	VNE-4781	383
22-047823	VNE-4782	279
22-047823	VNE-4782	287
22-047823	VNE-4782	387
22-047823	VNE-4782	388
22-047847	VNE-4784	380
22-047847	VNE-4784	510
22-047854	VNE-4785	380
22-047854	VNE-4785	510
22-047885	VNE-4788	396
22-047892	VNE-4789	396
22-047922	VNE-4792	400
22-047939	VNE-4793	400
22-047946	VNE-4794	390
22-047946	VNE-4794	404
22-047946	VNE-4794	405
22-047953	VNE-4795	390
22-047953	VNE-4795	404
22-047953	VNE-4795	405
22-047960	VNE-4796	392
22-047960	VNE-4796	393
22-047977	VNE-4797	392
22-047977	VNE-4797	393
22-048028	VNE-4802	578
22-048035	VNE-4803	578
22-048066	VNE-4806	578
22-048073	VNE-4807	578
22-048103	VNE-4810	582
22-048110	VNE-4811	582
22-048141	VNE-4814	583
22-048172	VNE-4817	601
22-048189	VNE-4818	593
22-048189	VNE-4818	594
22-048189	VNE-4818	595
22-048196	VNE-4819	593
22-048196	VNE-4819	594
22-048196	VNE-4819	595
22-048202	VNE-4820	586
22-048202	VNE-4820	587
22-048202	VNE-4820	588
22-048219	VNE-4821	586
22-048219	VNE-4821	587
22-048219	VNE-4821	588
22-048226	VNE-4822	601
22-048233	VNE-4823	601
22-048264	VNE-4826	600
22-048271	VNE-4827	600
22-048318	VNE-4831	586
22-048318	VNE-4831	587
22-048318	VNE-4831	588
22-048318	VNE-4831	589
22-048325	VNE-4832	585
22-048332	VNE-4833	585
22-048349	VNE-4834	594
22-048349	VNE-4834	595
22-048356	VNE-4835	594
22-048356	VNE-4835	595
22-048707	VNE-4870	184
22-048714	VNE-4871	184
22-048721	VNE-4872	184
22-048820	VNE-4882	276
22-048820	VNE-4882	277
22-048837	VNE-4883	276
22-048837	VNE-4883	277
22-048844	VNE-4884	277
22-048851	VNE-4885	277
22-048912	VNE-4891	299
22-048912	VNE-4891	300
22-048936	VNE-4893	299
22-048936	VNE-4893	300
22-048967	VNE-4896	300
22-048967	VNE-4896	301
22-048967	VNE-4896	302
22-048974	VNE-4897	300
22-048974	VNE-4897	301
22-048974	VNE-4897	302
22-049001	VNE-4900	305
22-049001	VNE-4900	306
22-049018	VNE-4901	305
22-049018	VNE-4901	306
22-049025	VNE-4902	305
22-049025	VNE-4902	306
22-049032	VNE-4903	306
22-049032	VNE-4903	307
22-049032	VNE-4903	311
22-049049	VNE-4904	306
22-049049	VNE-4904	311
22-049056	VNE-4905	307
22-049063	VNE-4906	307
22-049070	VNE-4907	301
22-049087	VNE-4908	301
22-049094	VNE-4909	301
22-049100	VNE-4910	301
22-049148	VNE-4914	305
22-049155	VNE-4915	305
22-049162	VNE-4916	305
22-049179	VNE-4917	390
22-049179	VNE-4917	404
22-049179	VNE-4917	405
22-049186	VNE-4918	390
22-049186	VNE-4918	404
22-049186	VNE-4918	405
22-049209	VNE-4920	399
22-049216	VNE-4921	390
22-049216	VNE-4921	404
22-049216	VNE-4921	405
22-049230	VNE-4923	404
22-049230	VNE-4923	405
22-049254	VNE-4925	399
22-049261	VNE-4926	399
22-049285	VNE-4928	578
22-049308	VNE-4930	576
22-049315	VNE-4931	578
22-049322	VNE-4932	578
22-049339	VNE-4933	578
22-049384	VNE-4938	591
22-049384	VNE-4938	592
22-049384	VNE-4938	593
22-049391	VNE-4939	591
22-049391	VNE-4939	592
22-049391	VNE-4939	593
22-049407	VNE-4940	586
22-049445	VNE-4944	586
22-049445	VNE-4944	587
22-049445	VNE-4944	588
22-049445	VNE-4944	589
22-049452	VNE-4945	586
22-049452	VNE-4945	587
22-049452	VNE-4945	588
22-049452	VNE-4945	589
22-049469	VNE-4946	593
22-049469	VNE-4946	594
22-049476	VNE-4947	593
22-049476	VNE-4947	594
22-049483	VNE-4948	586
22-049490	VNE-4949	586
22-049506	VNE-4950	589
22-049506	VNE-4950	590
22-049513	VNE-4951	589
22-049513	VNE-4951	590
22-049582	VNE-4958	585
22-049599	VNE-4959	585
22-049605	VNE-4960	594
22-049605	VNE-4960	595
22-049612	VNE-4961	594
22-049612	VNE-4961	595
22-049636	VNE-4963	584
22-049636	VNE-4963	585
22-049698	VNE-4969	313
22-050106	VNE-5010	184
22-050113	VNE-5011	184
22-050120	VNE-5012	159
22-050120	VNE-5012	182
22-050137	VNE-5013	159
22-050137	VNE-5013	182
22-051189	VNE-5118	522
22-051196	VNE-5119	522
22-051202	VNE-5120	522
22-051219	VNE-5121	226
22-051219	VNE-5121	227
22-051219	VNE-5121	228
22-051226	VNE-5122	226
22-051226	VNE-5122	227
22-051226	VNE-5122	228
22-051707	VN7-5170	103
22-051714	VN7-5171	103
22-051813	VNE-5181	188
22-051813	VNE-5181	189
22-051813	VNE-5181	206
22-051813	VNE-5181	207
22-052261	VNE-5226	574
22-052261	VNE-5226	575
22-052544	VNE-5254	5
22-052544	VNE-5254	6
22-052544	VNE-5254	10
22-052568	VN3-5256	501
22-052568	VN3-5256	502
22-052698	VNE-5269	602
22-052704	VNE-5270	602
22-052728	VN3-5272	501
22-052728	VN3-5272	502
22-052810	VN7-5281	102
22-052810	VN7-5281	105
22-052810	VN7-5281	108
22-052827	VN7-5282	102
22-052827	VN7-5282	105
22-052827	VN7-5282	108
22-052834	VN7-5283	13
22-052834	VN7-5283	102
22-052834	VN7-5283	105
22-052834	VN7-5283	108
22-052841	VN7-5284	13
22-052841	VN7-5284	102
22-052841	VN7-5284	105
22-052841	VN7-5284	108
22-052940	VNE-5294	475
22-052957	VNE-5295	165
22-052957	VNE-5295	475
22-052957	VNE-5295	477
22-052964	VNE-5296	165
22-052964	VNE-5296	475
22-052964	VNE-5296	477
22-052971	VNE-5297	475
22-052988	VNE-5298	475
22-053039	VN7-5303	108
22-053046	VN7-5304	108
22-053060	VNE-5306	148
22-053060	VNE-5306	256
22-053060	VNE-5306	257
22-053060	VNE-5306	260
22-053060	VNE-5306	415
22-053060	VNE-5306	416
22-053060	VNE-5306	417
22-053060	VNE-5306	418
22-053060	VNE-5306	419
22-053060	VNE-5306	612
22-053060	VNE-5306	613
22-053060	VNE-5306	615
22-053060	VNE-5306	616
22-053060	VNE-5306	621
22-053077	VNE-5307	148
22-053077	VNE-5307	256
22-053077	VNE-5307	257
22-053077	VNE-5307	260
22-053077	VNE-5307	415
22-053077	VNE-5307	416
22-053077	VNE-5307	417
22-053077	VNE-5307	418
22-053077	VNE-5307	419
22-053077	VNE-5307	612
22-053077	VNE-5307	613
22-053077	VNE-5307	615
22-053077	VNE-5307	616
22-053077	VNE-5307	621
22-053541	VN2-5354	316
22-053596	VNE-5359	285
22-053602	VNE-5360	285
22-053619	VNE-5361	285
22-053626	VNE-5362	285
22-059543	VNE-5954	586
22-059543	VNE-5954	587
22-059543	VNE-5954	588
22-059550	VNE-5955	586
22-059550	VNE-5955	587
22-059550	VNE-5955	588
22-100030	VNE-A003	165
22-100030	VNE-A003	176
22-100047	VNE-A004	165
22-100047	VNE-A004	176
22-100177	VNE-A017	124
22-100177	VNE-A017	126
22-100412	VN3-A041	317
22-100436	VN3-A043	334
22-100436	VN3-A043	335
22-100436	VN3-A043	339
22-100436	VN3-A043	340
22-100436	VN3-A043	341
22-102089	VNE-A208	512
22-102089	VNE-A208	513
22-102348	VNE-A234	574
22-102348	VNE-A234	575
22-102621	VN7-A262	520
22-102621	VN7-A262	521
22-102645	VN7-A264	520
22-102645	VN7-A264	521
22-103093	VNE-A309	102
22-103093	VNE-A309	104
22-103093	VNE-A309	106
22-103093	VNE-A309	108
22-103093	VNE-A309	141
22-103109	VNE-A310	102
22-103109	VNE-A310	104
22-103109	VNE-A310	106
22-103109	VNE-A310	108
22-103109	VNE-A310	141
22-103130	VNE-A313	102
22-103130	VNE-A313	104
22-103130	VNE-A313	106
22-103130	VNE-A313	107
22-103147	VNE-A314	102
22-103147	VNE-A314	104
22-103147	VNE-A314	106
22-103147	VNE-A314	107
22-104885	VN7-A488	137
22-104892	VN7-A489	137
22-105349	VNE-A534	199
22-105356	VNE-A535	199
22-105356	VNE-A535	200
22-105813	VNE-A581	15
22-105813	VNE-A581	546
22-105813	VNE-A581	550
22-105813	VNE-A581	561
22-105813	VNE-A581	562
22-105813	VNE-A581	563
22-105813	VNE-A581	564
22-105813	VNE-A581	572
22-105813	VNE-A581	672
22-105813	VNE-A581	726
22-105813	VNE-A581	727
22-106605	VNE-A660	160
22-106605	VNE-A660	263
22-106605	VNE-A660	469
22-106605	VNE-A660	648
22-106612	VNE-A661	160
22-106612	VNE-A661	263
22-106612	VNE-A661	469
22-106612	VNE-A661	648
22-106735	VN7-A673	522
22-106735	VN7-A673	523
22-106742	VN7-A674	523
22-107985	VNE-A798	2
22-107985	VNE-A798	3
22-107985	VNE-A798	4
22-108951	VNE-A895	475
22-108968	VNE-A896	475
22-110442	VNE-B044	158
22-110442	VNE-B044	261
22-110442	VNE-B044	427
22-110442	VNE-B044	432
22-110442	VNE-B044	433
22-110442	VNE-B044	447
22-110442	VNE-B044	626
22-110442	VNE-B044	629
22-110442	VNE-B044	630
22-110442	VNE-B044	633
22-110459	VNE-B045	158
22-110459	VNE-B045	261
22-110459	VNE-B045	427
22-110459	VNE-B045	432
22-110459	VNE-B045	433
22-110459	VNE-B045	447
22-110459	VNE-B045	626
22-110459	VNE-B045	629
22-110459	VNE-B045	630
22-110459	VNE-B045	633
22-110893	VNE-B089	491
22-110909	VNE-B090	491
22-111074	VNE-B107	124
22-111074	VNE-B107	126
22-111081	VNE-B108	124
22-111081	VNE-B108	126
22-111111	VNE-B111	596
22-111111	VNE-B111	597
22-111111	VNE-B111	598
22-111128	VNE-B112	596
22-111128	VNE-B112	597
22-111128	VNE-B112	598
22-111715	VNE-B171	515
22-111760	VNE-B176	224
22-111760	VNE-B176	298
22-111777	VNE-B177	224
22-111777	VNE-B177	298
22-112743	VNE-B274	232
22-112750	VNE-B275	232
22-112774	VNE-B277	277
22-112781	VNE-B278	277
22-112798	VNE-B279	277
22-112804	VNE-B280	277
22-112811	VNE-B281	229
22-112811	VNE-B281	230
22-112811	VNE-B281	231
22-112811	VNE-B281	250
22-112811	VNE-B281	251
22-112811	VNE-B281	302
22-112811	VNE-B281	303
22-112811	VNE-B281	304
22-112811	VNE-B281	312
22-112811	VNE-B281	650
22-112811	VNE-B281	651
22-112811	VNE-B281	652
22-112811	VNE-B281	653
22-112811	VNE-B281	664
22-112880	VNE-B288	229
22-112880	VNE-B288	230
22-112880	VNE-B288	231
22-112880	VNE-B288	250
22-112880	VNE-B288	251
22-112880	VNE-B288	302
22-112880	VNE-B288	303
22-112880	VNE-B288	304
22-112880	VNE-B288	312
22-112880	VNE-B288	650
22-112880	VNE-B288	651
22-112880	VNE-B288	652
22-112880	VNE-B288	653
22-112880	VNE-B288	664
22-113108	VNE-B310	190
22-113108	VNE-B310	204
22-113108	VNE-B310	205
22-113108	VNE-B310	292
22-113115	VNE-B311	170
22-113115	VNE-B311	171

New order number – Old order number

New	Old	Page
22-113115	VNE-B311	482
22-113115	VNE-B311	483
22-113115	VNE-B311	484
22-113313	VNE-B331	508
22-113320	VNE-B332	508
22-113337	VNE-B333	501
22-113337	VNE-B333	502
22-113344	VNE-B334	501
22-113344	VNE-B334	502
22-118608	VNE-B860	167
22-118608	VNE-B860	168
22-118608	VNE-B860	491
22-118615	VNE-B861	167
22-118615	VNE-B861	168
22-118615	VNE-B861	491
22-118684	VNE-B868	650
22-118684	VNE-B868	651
22-118691	VNE-B869	650
22-118691	VNE-B869	651
22-118714	VNE-B871	261
22-118714	VNE-B871	432
22-118714	VNE-B871	456
22-118714	VNE-B871	629
22-118714	VNE-B871	630
22-118714	VNE-B871	639
22-118721	VNE-B872	261
22-118721	VNE-B872	432
22-118721	VNE-B872	456
22-118721	VNE-B872	629
22-118721	VNE-B872	630
22-118721	VNE-B872	639
22-118738	VNE-B873	191
22-118738	VNE-B873	454
22-118738	VNE-B873	463
22-118738	VNE-B873	465
22-118738	VNE-B873	467
22-118738	VNE-B873	637
22-118738	VNE-B873	643
22-118738	VNE-B873	645
22-118738	VNE-B873	647
22-118745	VNE-B874	191
22-118745	VNE-B874	454
22-118745	VNE-B874	463
22-118745	VNE-B874	465
22-118745	VNE-B874	467
22-118745	VNE-B874	637
22-118745	VNE-B874	643
22-118745	VNE-B874	645
22-118745	VNE-B874	647
22-119186	VNE-B918	372
22-119186	VNE-B918	373
22-119193	VNE-B919	372
22-119193	VNE-B919	373
22-119261	VNE-B926	135
22-119278	VNE-B927	135
22-119315	VNE-B931	195
22-119315	VNE-B931	196
22-119315	VNE-B931	203
22-120199	VNE-C019	650
22-120199	VNE-C019	651
22-120205	VNE-C020	650
22-120205	VNE-C020	651
22-121349	*VNE-C134*	*277*
22-121356	*VNE-C135*	*277*
22-122469	VNE-C246	179
22-122469	VNE-C246	180
22-122469	VNE-C246	297
22-122469	VNE-C246	517
22-122469	VNE-C246	518
22-122483	VNE-C248	191
22-122483	VNE-C248	192
22-123602	VNE-C360	135
22-123619	VNE-C361	135
22-127426	VNE-C742	512
22-127426	VNE-C742	513
22-128188	VNE-C818	515
22-128188	VNE-C818	524
22-128201	VNE-C820	277
22-128218	VNE-C821	277
22-128225	VNE-C822	172
22-128225	VNE-C822	207
22-128225	VNE-C822	292
22-128225	VNE-C822	491
22-128249	VNE-C824	491
22-128256	VNE-C825	491
22-128287	VNE-C828	195
22-128300	VNE-C830	361
22-128300	VNE-C830	362
22-131492	VNE-D149	517
22-131607	VNE-D160	17
22-131607	VNE-D160	21
22-131607	VNE-D160	24
22-131607	VNE-D160	539
22-131607	VNE-D160	540
22-131607	VNE-D160	555
22-131607	VNE-D160	560
22-131607	VNE-D160	568
22-131607	VNE-D160	570
22-131607	VNE-D160	669
22-131607	VNE-D160	670
22-131607	VNE-D160	684
22-131607	VNE-D160	687
22-131607	VNE-D160	692
22-131607	VNE-D160	693
22-131607	VNE-D160	696
22-131607	VNE-D160	697
22-131614	VNE-D161	18
22-131614	VNE-D161	21
22-131614	VNE-D161	24
22-131614	VNE-D161	539
22-131614	VNE-D161	541
22-131614	VNE-D161	555
22-131614	VNE-D161	560
22-131614	VNE-D161	568
22-131614	VNE-D161	570
22-131614	VNE-D161	669
22-131614	VNE-D161	670
22-131614	VNE-D161	672
22-131614	VNE-D161	684
22-131614	VNE-D161	688
22-131614	VNE-D161	692
22-131614	VNE-D161	696
22-131614	VNE-D161	698
22-131614	VNE-D161	731
22-132390	VNE-D239	520
22-132390	VNE-D239	521
22-132482	VNE-D248	4
22-135001	VNE-D500	109
22-135001	VNE-D500	112
22-135001	VNE-D500	142
22-135018	VNE-D501	109
22-135018	VNE-D501	112
22-135018	VNE-D501	142
22-135032	VNE-D503	110
22-135032	VNE-D503	112
22-135032	VNE-D503	142
22-135049	VNE-D504	110
22-135049	VNE-D504	112
22-135049	VNE-D504	142
22-135971	VNE-D597	247
22-135971	VNE-D597	248
22-136244	VNE-D624	178
22-136244	VNE-D624	179
22-136244	VNE-D624	211
22-136244	VNE-D624	212
22-136244	VNE-D624	494
22-136244	VNE-D624	495
22-136251	VNE-D625	192
22-136572	VNE-D657	113
22-136589	VNE-D658	113
22-136602	VNE-D660	114
22-136619	VNE-D661	114
22-137197	VNE-D719	476
22-137203	VNE-D720	476
22-138361	VNE-D836	127
22-138361	VNE-D836	128
22-138361	VNE-D836	142
22-138392	VNE-D839	237
22-138392	VNE-D839	238
22-138392	VNE-D839	251
22-138712	*VNE-D871*	*593*
22-138712	*VNE-D871*	*594*
22-138729	*VNE-D872*	*593*
22-138729	*VNE-D872*	*594*
22-139122	VNE-D912	172
22-139122	VNE-D912	207
22-139122	VNE-D912	292
22-139122	VNE-D912	491
22-139184	VNE-D918	18
22-139184	VNE-D918	21
22-139184	VNE-D918	539
22-139184	VNE-D918	541
22-139184	VNE-D918	555
22-139184	VNE-D918	560
22-139184	VNE-D918	568
22-139184	VNE-D918	570
22-139184	VNE-D918	684
22-139184	VNE-D918	696
22-139184	VNE-D918	698
22-139191	VNE-D919	18
22-139191	VNE-D919	21
22-139191	VNE-D919	539
22-139191	VNE-D919	541
22-139191	VNE-D919	555
22-139191	VNE-D919	560
22-139191	VNE-D919	568
22-139191	VNE-D919	570
22-139191	VNE-D919	685
22-139191	VNE-D919	696
22-139191	VNE-D919	698
22-139191	VNE-D919	731
22-139320	VNE-D932	693
22-139320	VNE-D932	734
22-139924	VNE-D992	237
22-139924	VNE-D992	238
22-139924	VNE-D992	251
22-139931	VNE-D993	102
22-139931	VNE-D993	103
22-139931	VNE-D993	104
22-139931	VNE-D993	106
22-139931	VNE-D993	108
22-139931	VNE-D993	141
22-139948	VNE-D994	102
22-139948	VNE-D994	103
22-139948	VNE-D994	104
22-139948	VNE-D994	106
22-139948	VNE-D994	108
22-139948	VNE-D994	141
22-139993	VNE-D999	223
22-140012	VNE-E001	685
22-140067	VNE-E006	147
22-140067	VNE-E006	533
22-140074	VNE-E007	147
22-140074	VNE-E007	533
22-140098	VNE-E009	743
22-140098	VNE-E009	744
22-140098	VNE-E009	745
22-140098	VNE-E009	746
22-140388	VN7-E038	179
22-140388	VN7-E038	180
22-140388	VN7-E038	297
22-140388	VN7-E038	517
22-141590	VNE-E159	161
22-141590	VNE-E159	258
22-141590	VNE-E159	259
22-141590	VNE-E159	420
22-141590	VNE-E159	421
22-141590	VNE-E159	422
22-141590	VNE-E159	423
22-141590	VNE-E159	424
22-141590	VNE-E159	469
22-141590	VNE-E159	470
22-141590	VNE-E159	617
22-141590	VNE-E159	618
22-141590	VNE-E159	619
22-141590	VNE-E159	621
22-141590	VNE-E159	649
22-141606	VNE-E160	161
22-141606	VNE-E160	258
22-141606	VNE-E160	259
22-141606	VNE-E160	420
22-141606	VNE-E160	421
22-141606	VNE-E160	422
22-141606	VNE-E160	423
22-141606	VNE-E160	424
22-141606	VNE-E160	469
22-141606	VNE-E160	470
22-141606	VNE-E160	617
22-141606	VNE-E160	618
22-141606	VNE-E160	619
22-141606	VNE-E160	621
22-141606	VNE-E160	649
22-141705	VNE-E170	321
22-141705	VNE-E170	323
22-141705	VNE-E170	324
22-141705	VNE-E170	325
22-141705	VNE-E170	331
22-141705	VNE-E170	332
22-142429	VN3-E242	743
22-142429	VN3-E242	744
22-142429	VN3-E242	745
22-142429	VN3-E242	746
22-142436	VN3-E243	743
22-142436	VN3-E243	744
22-142436	VN3-E243	745
22-142436	VN3-E243	746
22-143358	VNE-E335	246
22-143365	VNE-E336	246
22-143372	VNE-E337	246
22-143372	VNE-E337	247
22-143389	VNE-E338	246
22-143389	VNE-E338	247
22-144249	VNE-E424	88
22-144256	VNE-E425	88
22-144263	VNE-E426	88
22-144270	VNE-E427	88
22-144928	VNE-E492	271
22-144928	VNE-E492	272
22-144935	VNE-E493	271
22-144935	VNE-E493	272
22-145246	VNE-E524	115
22-145253	VNE-E525	115
22-145277	VNE-E527	115
22-145284	VNE-E528	115
22-145550	VNE-E555	15
22-145550	VNE-E555	66
22-145550	VNE-E555	67
22-145550	VNE-E555	553
22-145550	VNE-E555	559
22-145550	VNE-E555	665
22-145550	VNE-E555	667
22-145550	VNE-E555	680
22-145697	VNE-E569	576
22-146809	VNE-E680	167
22-146809	VNE-E680	473
22-146809	VNE-E680	585
22-146816	VNE-E681	167
22-146816	VNE-E681	473
22-146816	VNE-E681	585
22-147073	VNE-E707	534
22-147080	VNE-E708	534
22-147448	VNE-E744	501
22-147448	VNE-E744	502
22-147455	VN7-E745	503
22-147455	VN7-E745	504
22-147462	VN7-E746	503
22-147462	VN7-E746	504
22-147493	VN7-E749	503
22-147493	VN7-E749	504
22-147493	VN7-E749	506
22-147509	VN7-E750	503
22-147509	VN7-E750	504
22-147509	VN7-E750	506
22-147516	VN7-E751	503
22-147516	VN7-E751	504
22-147516	VN7-E751	506
22-147523	VN7-E752	503
22-147523	VN7-E752	504
22-147523	VN7-E752	506
22-147530	VA7-E753	503
22-147530	VA7-E753	505
22-147554	VA7-E755	503
22-147554	VA7-E755	505
22-147554	VA7-E755	506
22-147561	VA7-E756	503
22-147561	VA7-E756	505
22-147561	VA7-E756	506
22-147578	VN7-E757	509
22-147578	VN7-E757	510
22-147585	VN7-E758	509
22-147585	VN7-E758	510
22-147592	VA7-E759	509
22-147592	VA7-E759	510
22-147608	VA7-E760	509
22-147608	VA7-E760	510
22-151025	*VNE-F102*	*327*
22-151025	*VNE-F102*	*329*
22-151032	VNE-F103	327
22-151032	VNE-F103	329
22-151049	VNE-F104	327
22-151049	VNE-F104	329
22-151056	VNE-F105	573
22-151056	VNE-F105	574
22-151056	VNE-F105	716
22-151056	VNE-F105	718
22-151056	VNE-F105	719
22-151056	VNE-F105	720
22-151056	VNE-F105	746
22-151070	VNE-F107	573
22-151070	VNE-F107	574
22-151070	VNE-F107	716
22-151070	VNE-F107	718
22-151070	VNE-F107	719
22-151070	VNE-F107	720
22-151070	VNE-F107	746
22-151094	VNE-F109	601
22-151100	VNE-F110	601
22-151223	VNE-F122	271
22-151223	VNE-F122	272
22-151230	VNE-F123	271
22-151230	VNE-F123	272
22-151773	VNE-F177	278
22-151780	VNE-F178	278
22-152749	VNE-F274	89
22-152749	VNE-F274	90
22-152756	VNE-F275	89
22-152756	VNE-F275	90
22-152770	VNE-F277	89
22-152770	VNE-F277	90
22-152787	VNE-F278	89
22-152787	VNE-F278	90
22-153746	*VN7-F374*	*315*
22-153746	*VN7-F374*	*316*
22-153753	*VN7-F375*	*314*
22-153753	*VN7-F375*	*315*
22-155344	VNE-F534	652
22-155344	VNE-F534	654
22-155344	VNE-F534	655
22-156358	VNE-F635	584
22-156365	VNE-F636	584
22-156655	VNE-F665	523
22-156662	VNE-F666	523
22-156679	VNE-F667	384
22-156679	VNE-F667	385
22-158390	VNE-F839	522
22-158390	VNE-F839	523
22-158444	VNE-F844	310
22-158451	VNE-F845	310
22-158475	VNE-F847	194
22-158475	VNE-F847	200
22-158475	VNE-F847	201
22-158475	VNE-F847	434
22-158475	VNE-F847	630
22-158475	VNE-F847	631
22-158482	VNE-F848	194
22-158482	VNE-F848	200
22-158482	VNE-F848	201
22-158482	VNE-F848	434
22-158482	VNE-F848	630
22-158482	VNE-F848	631
22-158819	VNE-F881	137
22-158826	VNE-F882	137
22-158857	VNE-F885	287
22-158857	VNE-F885	288
22-158864	VNE-F886	287
22-158864	VNE-F886	288
22-158901	*VN3-F890*	*190*
22-158901	*VN3-F890*	*204*
22-158901	*VN3-F890*	*205*
22-158901	*VN3-F890*	*292*
22-158918	*VN3-F891*	*190*
22-158918	*VN3-F891*	*204*
22-158918	*VN3-F891*	*205*
22-158918	*VN3-F891*	*292*
22-164568	VNE-G456	137
22-164568	VNE-G456	138
22-164575	VNE-G457	137
22-164575	VNE-G457	138
22-164773	VNE-G477	248
22-164773	VNE-G477	249
22-164773	VNE-G477	250
22-164858	VNE-G485	357
22-165022	VNE-G502	311
22-165022	VNE-G502	312
22-165039	VNE-G503	311
22-165039	VNE-G503	312
22-165381	VNE-G538	585
22-165398	VNE-G539	585
22-165565	VNE-G556	579
22-165572	VNE-G557	579
22-165756	VNE-G575	576
22-165763	VNE-G576	576
22-165770	VNE-G577	397
22-165787	VNE-G578	397
22-165794	VNE-G579	275
22-165800	VNE-G580	275
22-165954	VNE-G595	187
22-165978	VNE-G597	585
22-165985	VNE-G598	585
22-166029	VNE-G602	576
22-166029	VNE-G602	577
22-166036	VNE-G603	576
22-166036	VNE-G603	577
22-166258	VNE-G625	311
22-166265	VNE-G626	311
22-166357	VNE-G635	274
22-166364	VNE-G636	274
22-166371	VNE-G637	181
22-166371	VNE-G637	522
22-166432	VNE-G643	194
22-166432	VNE-G643	292
22-166494	VNE-G649	279
22-166500	VNE-G650	279
22-166722	VNE-G672	297
22-166722	VNE-G672	407
22-166722	VNE-G672	581
22-166722	VNE-G672	582
22-166722	VNE-G672	603
22-166739	VNE-G673	297
22-166739	VNE-G673	407
22-166739	VNE-G673	581
22-166739	VNE-G673	582
22-166739	VNE-G673	603
22-166746	VNE-G674	396
22-166753	VNE-G675	396
22-166814	VNE-G681	584
22-166821	VNE-G682	584
22-166838	VNE-G683	235
22-166838	VNE-G683	312
22-166845	VNE-G684	235
22-166845	VNE-G684	312
22-166920	VNE-G692	576
22-166937	VNE-G693	576
22-167002	VNE-G700	602
22-167019	VNE-G701	602
22-167026	VNE-G702	395
22-167033	VNE-G703	395
22-167071	VNE-G707	514
22-167071	VNE-G707	522
22-167095	VNE-G709	312
22-167101	VNE-G710	312
22-167293	VNE-G729	279
22-167309	VNE-G730	279
22-168061	VNE-G806	321
22-168061	VNE-G806	323
22-168061	VNE-G806	325
22-168085	VNE-G808	321
22-168085	VNE-G808	323
22-168085	VNE-G808	324
22-168085	VNE-G808	325
22-168085	VNE-G808	331
22-168085	VNE-G808	332
22-168337	VNE-G833	584
22-168337	VNE-G833	597
22-168344	VNE-G834	584
22-168344	VNE-G834	597
22-168467	VNE-G846	580
22-168474	VNE-G847	580
22-168535	VNE-G853	157
22-168535	VNE-G853	181

New order number – Old order number

New	Old	Page
22-168542	VNE-G854	157
22-168542	VNE-G854	181
22-168597	VNE-G859	144
22-168597	VNE-G859	146
22-168597	VNE-G859	454
22-168597	VNE-G859	463
22-168597	VNE-G859	465
22-168597	VNE-G859	467
22-168597	VNE-G859	638
22-168597	VNE-G859	643
22-168597	VNE-G859	645
22-168597	VNE-G859	647
22-168603	VNE-G860	144
22-168603	VNE-G860	146
22-168603	VNE-G860	454
22-168603	VNE-G860	463
22-168603	VNE-G860	465
22-168603	VNE-G860	467
22-168603	VNE-G860	638
22-168603	VNE-G860	643
22-168603	VNE-G860	645
22-168603	VNE-G860	647
22-168665	VNE-G866	175
22-168665	VNE-G866	176
22-168672	VNE-G867	175
22-168672	VNE-G867	176
22-168771	VNE-G877	361
22-168771	VNE-G877	362
22-169242	VNE-G924	580
22-169259	VNE-G925	580
22-169945	VNE-G994	287
22-169945	VNE-G994	288
22-169952	VNE-G995	287
22-169952	VNE-G995	288
22-169976	VNE-G997	600
22-169983	VNE-G998	600
22-170071	VNE-H007	68
22-170071	VNE-H007	69
22-170408	VNE-H040	203
22-170408	VNE-H040	581
22-170415	VNE-H041	203
22-170415	VNE-H041	581
22-170729	VNE-H072	656
22-170897	VNE-H089	250
22-170903	VNE-H090	250
22-170996	VNE-H099	374
22-170996	VNE-H099	375
22-170996	VNE-H099	376
22-170996	VNE-H099	377
22-171009	VNE-H100	374
22-171009	VNE-H100	375
22-171009	VNE-H100	376
22-171009	VNE-H100	377
22-171443	VNE-H144	523
22-171528	VNE-H152	517
22-172433	VNE-H243	192
22-172518	VNE-H251	95
22-172518	VNE-H251	97
22-172518	VNE-H251	98
22-172518	VNE-H251	100
22-172518	VNE-H251	101
22-172525	VNE-H252	95
22-172525	VNE-H252	97
22-172525	VNE-H252	98
22-172525	VNE-H252	100
22-172525	VNE-H252	101
22-172662	VNE-H266	167
22-172662	VNE-H266	385
22-172662	VNE-H266	491
22-172679	VNE-H267	167
22-172679	VNE-H267	385
22-172679	VNE-H267	491
22-172839	VNE-H283	11
22-172846	VNE-H284	11
22-173089	VNE-H308	275
22-173096	VNE-H309	275
22-173560	VNE-H356	274
22-173577	VNE-H357	274
22-176158	VNE-H615	401
22-176158	VNE-H615	402
22-176165	VNE-H616	401
22-176165	VNE-H616	402
22-181459	*VNE-4457*	*585*
22-181459	*VNE-4457*	*586*
22-181602	*V36-0156*	*499*
22-181619	V36-0367	95
22-181619	V36-0367	98
22-181626	V36-0368	95
22-181626	V36-0368	98
22-181633	V36-0369	96
22-181633	V36-0369	98
22-181640	V36-0370	96
22-181640	V36-0370	98
22-181657	*V36-0372*	*548*
22-181657	*V36-0372*	*558*
22-181657	*V36-0372*	*676*
22-181657	*V36-0372*	*678*
22-181657	*V36-0372*	*736*
22-182821		235
22-182838		235

New	Old	Page
22-182869		233
22-182869		239
22-182869		245
22-182869		251
22-182869		655
22-182869		664
22-182876		233
22-182876		239
22-182876		245
22-182876		251
22-182876		655
22-182876		664
22-183415		179
22-183415		212
22-183415		213
22-183415		495
22-183460		280
22-183484		280
22-183491		280
22-183507		280
22-183583		380
22-183590		380
22-183644		156
22-183644		161
22-183644		262
22-183644		263
22-183644		425
22-183644		470
22-183644		619
22-183644		620
22-183644		649
22-183651		156
22-183651		161
22-183651		262
22-183651		263
22-183651		425
22-183651		470
22-183651		619
22-183651		620
22-183651		649
22-183675		146
22-183675		435
22-183675		436
22-183675		437
22-183675		632
22-183682		146
22-183682		435
22-183682		436
22-183682		437
22-183682		632
22-183699		484
22-183705		14
22-183705		551
22-183705		552
22-183705		727
22-183712		574
22-183712		689
22-183712		691
22-183712		746
22-183712		747
22-183729		574
22-183729		689
22-183729		691
22-183750		733
22-183828	VNE-H775	478
22-183828	VNE-H775	479
22-183835	VNE-H776	478
22-183835	VNE-H776	479
22-183842		134
22-183842		143
22-183859		134
22-183859		143
22-183873		134
22-183873		143
22-183880		134
22-183880		143
22-183897		138
22-183903		138
22-184160	VNE-H888	478
22-184177	VNE-H889	478
22-184207		598
22-184221		598
22-184238		368
22-184238		369
22-184238		370
22-184238		737
22-184238		738
22-184245		368
22-184245		369
22-184245		370
22-184245		371
22-184245		737
22-184245		738
22-184283	VNE-H783	134
22-184306	VNE-H784	134
22-188632		225
22-188649		225
22-188663		298
22-189271		173
22-189271		193

New	Old	Page
22-189271		201
22-189271		492
22-189288		173
22-189288		193
22-189288		201
22-189288		492
22-193032		743
22-193032		744
22-193032		745
22-193032		746
22-193339		298
22-193360		653
22-193360		654
22-193360		661
22-193360		662
22-193414		327
22-193414		329
22-193421		169
22-193421		172
22-193438		169
22-193438		172
22-193452		521
22-193483		327
22-193483		329
22-194091		349
22-194091		350
22-194107		349
22-195241		169
22-195241		172
22-195258		169
22-195258		172
22-195302		9
22-195319		9
22-196309		562
22-196330		278
22-196330		279
22-196347		278
22-196347		279
22-196408		287
22-196415		287
22-196606		5
22-196682		179
22-196682		212
22-196682		213
22-196682		495
22-196743		395
22-196750		395
22-196859		539
22-196859		732
22-196934		196
22-196941		196
22-196958		197
22-196965		197
22-197313		361
22-197320		743
22-197320		744
22-197320		745
22-197320		746
22-197337		743
22-197337		744
22-197337		745
22-197337		746
22-197351		209
22-197351		210
22-197351		235
22-197368		209
22-197368		210
22-197368		235
22-197665		349
22-197672		135
22-197689		135
22-197849		351
22-197931		203
22-199492		104
22-199492		106
22-199508		104
22-199508		106
22-205414		537
22-205414		538
22-205438		538
22-212696		128
22-212986		580
22-212993		580
22-213136		135
22-213143		135
22-213686		580
22-213693		580
22-213709		377
22-213716		377
22-213747		406
22-213747		516
22-213754		406
22-213754		516
22-213778		448
22-213778		633
22-213785		448
22-213785		633
22-213808		275
22-213815		275
22-213839		385

New	Old	Page
22-213846		385
22-213945		388
22-213952		388
22-214089		274
22-214096		274
22-214287		110
22-214287		112
22-214287		114
22-214294		110
22-214294		112
22-214294		114
22-214751		363
22-214751		364
22-214751		365
22-214751		366
22-214751		739
22-214751		740
22-214768		366
22-214768		367
22-214768		739
22-214768		740
22-214775		600
22-214782		600
22-215482		196
22-215505		196
22-215734		314
22-215840		315
22-215895		374
22-215895		377
22-215949		374
22-215949		377
22-216540		288
22-216557		288
22-217134		232
22-217141		232
22-217271		196
22-217714		162
22-217721		162
22-217981		90
22-218001		90
22-218230		357
22-218469		506
22-218469		507
22-218469		509
22-218506		278
22-218513		278
22-218537		321
22-218537		323
22-218537		324
22-218537		325
22-218537		331
22-218537		332
22-218858		288
22-218865		288
22-218919		134
22-218926		134
22-219947		506
22-220066		116
22-220080		117
22-220103		316
22-220127		316
22-220530		232
22-220547		232
22-220578		102
22-220585		102
22-221490		130
22-222121		582
22-222138		582
22-223456		275
22-223463		275
22-223616		512
22-223951		361
22-223951		362
22-223951		363
22-224668		668
22-224668		673
22-224668		730
22-225269		523
22-225290		173
22-225306		173
22-226556		190
22-226556		204
22-226556		205
22-226556		292
22-226563		190
22-226563		204
22-226563		205
22-226563		292
22-226570		190
22-226570		204
22-226570		205
22-226570		292
23-218482		506
23-218482		509
23-219960		506
23-219984		506
24-000024	B46-0002	336
24-000024	B46-0002	351
24-000123	B46-0012	336
24-000123	B46-0012	351

New	Old	Page
24-000307	*B36-0030*	*703*
24-000307	*B36-0030*	*704*
24-000307	*B36-0030*	*729*
24-000321	B46-0032	87
24-000321	B46-0032	698
24-000321	B46-0032	699
24-000321	B46-0032	737
24-000321	B46-0032	740
24-000338	B46-0033	698
24-000345	B46-0034	699
24-000574	B46-0057	390
24-000574	B46-0057	394
24-000574	B46-0057	395
24-000628	B46-0062	390
24-000642	BE3-H821	93
24-000642	BE3-H821	94
24-000819	B46-0081	408
24-000857	B36-0085	145
24-000857	B36-0085	146
24-000857	B36-0085	147
24-000857	B36-0085	153
24-000857	B36-0085	154
24-000857	B36-0085	260
24-000857	B36-0085	261
24-000857	B36-0085	428
24-000857	B36-0085	429
24-000857	B36-0085	430
24-000857	B36-0085	431
24-000857	B36-0085	455
24-000857	B36-0085	456
24-000857	B36-0085	627
24-000857	B36-0085	628
24-000857	B36-0085	634
24-000857	B36-0085	635
24-000857	B36-0085	636
24-000857	B36-0085	639
24-000918	B46-0091	408
24-000918	B46-0091	623
24-000918	B46-0091	624
24-000925	B46-0092	181
24-000925	B46-0092	182
24-000925	B46-0092	255
24-000925	B46-0092	440
24-000925	B46-0092	441
24-000925	B46-0092	443
24-000925	B46-0092	444
24-000925	B46-0092	446
24-000925	B46-0092	604
24-000925	B46-0092	605
24-000925	B46-0092	607
24-000970	*B36-0097*	*281*
24-000970	*B36-0097*	*409*
24-000970	*B36-0097*	*624*
24-001182	B46-0118	139
24-001304	*B46-0130*	*79*
24-001304	*B46-0130*	*80*
24-001540	B46-0154	305
24-001540	B46-0154	309
24-001540	B46-0154	591
24-001564	B46-0156	152
24-001618	B36-0161	507
24-001618	B36-0161	508
24-001670	B46-0167	497
24-001670	B46-0167	498
24-001670	B46-0167	507
24-001694	B46-0169	497
24-001694	B46-0169	498
24-001694	B46-0169	499
24-001793	B46-0179	507
24-001861	B46-0186	281
24-001861	B46-0186	282
24-001960	B46-0196	282
24-001984	B46-0198	395
24-002288	B36-0228	155
24-002431	B46-0243	294
24-002431	B46-0243	295
24-002455	B36-0245	294
24-002455	B36-0245	295
24-002479	B46-0247	599
24-002486	B46-0248	598
24-002509	B46-0250	285
24-002509	B46-0250	286
24-002509	B46-0250	576
24-002530	B46-0253	294
24-002530	B46-0253	295
24-002561	B46-0256	599
24-002585	B46-0258	598
24-002608	B46-0260	285
24-002608	B46-0260	576
24-002837	B46-0283	663
24-002837	B46-0283	664
24-002899	B46-0289	656
24-002936	B46-0293	663
24-002936	B46-0293	664
24-002967	B46-0296	656
24-002967	B46-0296	657
24-002967	B46-0296	658
24-003100	*B46-0310*	*580*
24-003100	*B46-0310*	*581*
24-003162	*B46-0316*	*590*

New order number – Old order number

New	Old	Page
24-003179	B46-0317	281
24-003179	B46-0317	590
24-003193	B46-0319	304
24-003193	B46-0319	309
24-003193	B46-0319	585
24-003193	B46-0319	589
24-003193	B46-0319	590
24-003193	B46-0319	591
24-003209	B46-0320	580
24-003858	*B46-0385*	*535*
24-003858	*B46-0385*	*536*
24-003971	B46-0397	536
24-003971	B46-0397	537
24-004107	B46-0410	398
24-004206	B46-0420	398
24-004237	*B36-0423*	*279*
24-004237	*B36-0423*	*280*
24-004244	B46-0424	389
24-004374	*B46-0437*	*580*
24-004374	*B46-0437*	*581*
24-004435	B36-0443	289
24-004435	B36-0443	290
24-004459	B36-0445	290
24-004473	B46-0447	289
24-004473	B46-0447	290
24-004534	B36-0453	289
24-004534	B36-0453	290
24-004541	*B46-0454*	*381*
24-004565	*B46-0456*	*378*
24-004572	B46-0457	289
24-004572	B46-0457	290
24-004602	*B46-0460*	*382*
24-004626	*B36-0462*	*8*
24-004633	B46-0463	8
24-004633	B46-0463	9
24-004633	B46-0463	10
24-004633	B46-0463	11
24-004657	B46-0465	8
24-004657	B46-0465	9
24-004657	B46-0465	10
24-004732	B46-0473	8
24-004732	B46-0473	9
24-004732	B46-0473	10
24-004732	B46-0473	11
24-004732	B46-0473	407
24-004756	B46-0475	8
24-004756	B46-0475	9
24-004756	B46-0475	10
24-004862	B36-0486	181
24-004862	B36-0486	182
24-004862	B36-0486	183
24-004862	B36-0486	184
24-004862	B36-0486	254
24-004862	B36-0486	439
24-004862	B36-0486	440
24-004862	B36-0486	442
24-004862	B36-0486	444
24-004862	B36-0486	446
24-004862	B36-0486	604
24-004862	B36-0486	605
24-004862	B36-0486	606
24-004862	B36-0486	608
24-004930	B46-0493	435
24-004930	B46-0493	437
24-004930	B46-0493	438
24-004930	B46-0493	626
24-005012	B36-0501	353
24-005043	B46-0504	359
24-005043	B46-0504	360
24-005043	B46-0504	511
24-005067	*B46-0506*	*352*
24-005074	B36-0507	352
24-005111	B46-0511	352
24-005111	B46-0511	353
24-005111	B46-0511	355
24-005142	B46-0514	359
24-005142	B46-0514	360
24-005142	B46-0514	511
24-005166	*B60-0516*	*352*
24-005241	B36-0524	355
24-005258	B36-0525	336
24-005258	B36-0525	337
24-005265	B36-0526	336
24-005265	B36-0526	337
24-005272	B36-0527	336
24-005272	B36-0527	351
24-005272	B36-0527	355
24-005289	B36-0528	337
24-005289	B36-0528	338
24-005296	B36-0529	355
24-005340	B46-0534	352
24-005357	B46-0535	336
24-005357	B46-0535	337
24-005364	B46-0536	336
24-005364	B46-0536	337
24-005371	B46-0537	336
24-005371	B46-0537	351
24-005371	B46-0537	355
24-005388	B46-0538	337
24-005388	B46-0538	338
24-005395	B46-0539	355
24-005494	*B46-0549*	*208*
24-005494	*B46-0549*	*253*
24-006071	B46-0607	120
24-006088	B46-0608	119
24-006088	B46-0608	120
24-006088	B46-0608	130
24-006125	B46-0612	91
24-006200	B46-0620	699
24-006347	B46-0634	699
24-006347	B46-0634	737
24-006552	*B36-0655*	*675*
24-006569	B36-0656	674
24-006569	B36-0656	676
24-006569	B36-0656	696
24-006576	*B46-0657*	*673*
24-006866	B36-0686	408
24-006866	B36-0686	447
24-006866	B36-0686	623
24-006866	B36-0686	624
24-007030	B36-0703	337
24-007030	B36-0703	338
24-007047	B36-0704	337
24-007047	B36-0704	338
24-007054	B36-0705	352
24-007061	B36-0706	352
24-007078	B36-0707	352
24-007078	B36-0707	355
24-007139	B46-0713	337
24-007139	B46-0713	338
24-007146	B46-0714	337
24-007146	B46-0714	338
24-007214	B46-0721	131
24-007252	B46-0725	130
24-007276	B46-0727	120
24-007306	B46-0730	118
24-007306	B46-0730	119
24-007382	B36-0738	92
24-007382	B36-0738	136
24-007405	*B36-0740*	*208*
24-007405	*B36-0740*	*209*
24-007405	*B36-0740*	*210*
24-007405	*B36-0740*	*253*
24-007405	*B36-0740*	*561*
24-007504	*B36-0750*	*208*
24-007504	*B36-0750*	*209*
24-007504	*B36-0750*	*210*
24-007504	*B36-0750*	*253*
24-007504	*B36-0750*	*561*
24-007641	*B46-0764*	*213*
24-007672	B46-0767	214
24-007733	B46-0773	213
24-007733	B46-0773	214
24-008020	B46-0802	130
24-008037	B46-0803	139
24-008136	B46-0813	140
24-008198	B46-0819	140
24-008198	B46-0819	141
24-008204	B46-0820	741
24-008303	B46-0830	741
24-008372	B46-0837	673
24-008372	B46-0837	695
24-008372	B46-0837	730
24-008372	B46-0837	731
24-008716	B46-0871	214
24-008723	B46-0872	213
24-008723	B46-0872	214
24-008839	B46-0883	281
24-008839	B46-0883	408
24-008839	B46-0883	447
24-008938	B46-0893	408
24-008938	B46-0893	427
24-008938	B46-0893	447
24-008938	B46-0893	453
24-008938	B46-0893	622
24-008938	B46-0893	648
24-009089	B46-0908	281
24-009089	B46-0908	438
24-009089	B46-0908	439
24-009188	B46-0918	281
24-009188	B46-0918	408
24-009188	B46-0918	438
24-009188	B46-0918	439
24-009188	B46-0918	447
24-009232	B46-0923	159
24-009294	B46-0929	143
24-009294	B46-0929	144
24-009294	B46-0929	145
24-009294	B46-0929	148
24-009294	B46-0929	152
24-009294	B46-0929	153
24-009294	B46-0929	157
24-009294	B46-0929	158
24-009331	B46-0933	159
24-009492	B36-0949	143
24-009492	B36-0949	144
24-009492	B36-0949	157
24-009492	B36-0949	158
24-009669	B46-0966	508
24-009676	B46-0967	497
24-009676	B46-0967	498
24-009676	B46-0967	499
24-009737	B46-0973	497
24-009737	B46-0973	498
24-009737	B46-0973	499
24-009744	B46-0974	507
24-009744	B46-0974	508
24-009751	B46-0975	497
24-009751	B46-0975	498
24-009751	B46-0975	499
24-009805	*B46-0980*	*524*
24-009942	B36-0994	524
24-010047	B46-1004	599
24-010146	*B46-1014*	*244*
24-010146	*B46-1014*	*245*
24-010191	B46-1019	143
24-010191	B46-1019	144
24-010191	B46-1019	145
24-010191	B46-1019	157
24-010191	B46-1019	496
24-010214	B46-1021	152
24-010214	B46-1021	496
24-010245	B46-1024	598
24-010252	B46-1025	156
24-010269	B46-1026	156
24-010337	B46-1033	599
24-010351	B46-1035	599
24-010382	B46-1038	474
24-010382	B46-1038	485
24-010399	B46-1039	473
24-010399	B46-1039	474
24-010399	B46-1039	485
24-010450	B46-1045	286
24-010467	B46-1046	286
24-010474	B46-1047	149
24-010894	*B36-1089*	*263*
24-010993	B46-1099	398
24-011006	B46-1100	398
24-011020	B46-1102	185
24-011044	B46-1104	144
24-011044	B46-1104	145
24-011044	B46-1104	148
24-011044	B46-1104	149
24-011044	B46-1104	152
24-011044	B46-1104	153
24-011105	B46-1110	281
24-011105	B46-1110	448
24-011105	B46-1110	453
24-011105	B46-1110	623
24-011105	B46-1110	637
24-011167	B46-1116	390
24-011211	B46-1121	152
24-011211	B46-1121	496
24-011259	B46-1125	601
24-011266	B46-1126	601
24-011310	B46-1131	155
24-011327	B46-1132	599
24-011358	*B36-1135*	*263*
24-011365	*B36-1136*	*263*
24-011396	B46-1139	602
24-011402	B46-1140	602
24-011419	B46-1141	156
24-011488	B46-1148	132
24-011754	B46-1175	2
24-011761	B46-1176	2
24-011778	B46-1177	154
24-011785	B46-1178	154
24-011785	B46-1178	155
24-011839	B36-1183	353
24-011846	B46-1184	352
24-011846	B46-1184	353
24-011877	B46-1187	599
24-011884	B46-1188	599
24-011990	*B36-1199*	*1*
24-011990	*B36-1199*	*275*
24-012003	*B36-1200*	*1*
24-012003	*B36-1200*	*275*
24-012140	B46-1214	312
24-012157	B46-1215	580
24-012157	B46-1215	581
24-012164	B46-1216	580
24-012164	B46-1216	581
24-012171	B46-1217	394
24-012218	B46-1221	121
24-012218	B46-1221	123
24-012393	B46-1239	281
24-012393	B46-1239	282
24-012454	B46-1245	397
24-012454	B46-1245	405
24-012478	B46-1247	121
24-012478	B46-1247	122
24-012669	B46-1266	398
24-012676	B46-1267	398
24-012744	B36-1274	659
24-012744	B36-1274	660
24-012744	B36-1274	662
24-012744	B36-1274	663
24-012768	B46-1276	163
24-012768	B46-1276	174
24-012768	B46-1276	472
24-012768	B46-1276	473
24-013079	B46-1307	150
24-013079	B46-1307	158
24-013093	B46-1309	287
24-013109	B46-1310	287
24-013161	B36-1316	356
24-013284	B46-1328	252
24-013321	B46-1332	278
24-013321	B46-1332	385
24-013321	B46-1332	389
24-013338	B46-1333	278
24-013338	B46-1333	385
24-013338	B46-1333	389
24-013369	B46-1336	385
24-013369	B46-1336	389
24-013376	B46-1337	385
24-013789	B36-1378	317
24-013802	B36-1380	274
24-013819	B36-1381	274
24-013826	B46-1382	274
24-013840	B36-1384	316
24-013857	B36-1385	334
24-013857	B36-1385	339
24-013857	B36-1385	340
24-013857	B36-1385	341
24-013895	B36-1389	334
24-013895	B36-1389	340
24-013901	B36-1390	316
24-013932	B46-1393	183
24-013932	B46-1393	255
24-013932	B46-1393	439
24-013932	B46-1393	441
24-013932	B46-1393	443
24-013932	B46-1393	444
24-013932	B46-1393	446
24-013932	B46-1393	458
24-013932	B46-1393	459
24-013932	B46-1393	604
24-013932	B46-1393	605
24-013932	B46-1393	607
24-013932	B46-1393	608
24-013932	B46-1393	609
24-013932	B46-1393	625
24-014052	B36-1405	316
24-014106	B46-1410	150
24-014106	B46-1410	158
24-014120	B46-1412	150
24-014120	B46-1412	159
24-014137	B46-1413	150
24-014175	B36-1417	670
24-014298	B46-1429	87
24-014304	B46-1430	87
24-014441	B46-1444	185
24-014458	B46-1445	185
24-014533	B46-1453	150
24-014533	B46-1453	151
24-014533	B46-1453	152
24-014670	B46-1467	389
24-014687	B46-1468	598
24-014687	B46-1468	603
24-014687	B46-1468	733
24-014694	B46-1469	603
24-014700	B36-1470	317
24-014700	B36-1470	335
24-014700	B36-1470	336
24-014700	B36-1470	339
24-014700	B36-1470	340
24-014700	B36-1470	341
24-014717	B46-1471	402
24-014724	B46-1472	402
24-014731	B46-1473	402
24-014748	B46-1474	402
24-014779	B46-1477	599
24-014786	B46-1478	599
24-014816	B46-1481	390
24-014823	B46-1482	390
24-014847	B46-1484	599
24-014854	B46-1485	599
24-014861	B46-1486	121
24-014861	B46-1486	122
24-014861	B46-1486	123
24-014861	B46-1486	124
24-014885	B46-1488	310
24-014892	B46-1489	310
24-014991	B46-1499	601
24-015035	B46-1503	371
24-015035	B46-1503	372
24-015042	B36-1504	674
24-015042	B36-1504	696
24-015103	B46-1510	485
24-015103	B46-1510	486
24-015110	B46-1511	290
24-015110	B46-1511	291
24-015141	B46-1514	673
24-015141	B46-1514	695
24-015141	B46-1514	730
24-015141	B46-1514	731
24-015165	B46-1516	145
24-015165	B46-1516	153
24-015172	B46-1517	145
24-015172	B46-1517	153
24-015189	B36-1518	334
24-015189	B36-1518	339
24-015189	B36-1518	340
24-015226	*B46-1522*	*162*
24-015226	*B46-1522*	*186*
24-015233	B36-1523	445
24-015233	B36-1523	608
24-015240	B36-1524	558
24-015240	B36-1524	676
24-015240	B36-1524	679
24-015240	B36-1524	684
24-015240	B36-1524	736
24-015257	B36-1525	95
24-015257	B36-1525	98
24-015257	B36-1525	100
24-015264	B36-1526	95
24-015264	B36-1526	96
24-015264	B36-1526	98
24-015264	B36-1526	100
24-015264	B36-1526	101
24-015271	B46-1527	132
24-015288	B46-1528	281
24-015288	B46-1528	448
24-015288	B46-1528	453
24-015288	B46-1528	623
24-015288	B46-1528	637
24-015295	B36-1529	558
24-015295	B36-1529	670
24-015295	B36-1529	676
24-015295	B36-1529	679
24-015295	B36-1529	684
24-015295	B36-1529	736
24-015356	B36-1535	353
24-015363	B46-1536	353
24-015370	B36-1537	354
24-015370	B36-1537	355
24-015387	B46-1538	354
24-015387	B46-1538	355
24-015479	B46-1547	499
24-015479	B46-1547	500
24-015509	*B46-1550*	*312*
24-015523	B46-1552	255
24-015523	B46-1552	410
24-015523	B46-1552	411
24-015523	B46-1552	413
24-015523	B46-1552	414
24-015523	B46-1552	609
24-015523	B46-1552	610
24-015523	B46-1552	611
24-015530	B36-1553	670
24-015530	B36-1553	671
24-015554	B46-1555	457
24-015554	B46-1555	459
24-015554	B46-1555	624
24-015554	B46-1555	625
24-015714	B46-1571	2
24-015714	B46-1571	3
24-015714	B46-1571	5
24-015714	B46-1571	188
24-015714	B46-1571	189
24-015714	B46-1571	206
24-015714	B46-1571	207
24-015714	B46-1571	291
24-015738	B46-1573	53
24-015738	B46-1573	54
24-015738	B46-1573	81
24-015738	B46-1573	82
24-015738	B46-1573	83
24-015769	B46-1576	53
24-015769	B46-1576	54
24-015769	B46-1576	81
24-015769	B46-1576	82
24-015769	B46-1576	83
24-015776	B46-1577	216
24-015776	B46-1577	217
24-015776	B46-1577	218
24-015776	B46-1577	219
24-015776	B46-1577	220
24-015776	B46-1577	241
24-015837	B46-1583	280
24-015882	B36-1588	254
24-015882	B36-1588	583
24-015974	B36-1597	705
24-015974	B36-1597	707
24-015974	B36-1597	729
24-015974	B36-1597	730
24-016025	B46-1602	526
24-016025	B46-1602	527
24-016025	B46-1602	528
24-016025	B46-1602	529
24-016032	B36-1603	1
24-016032	B36-1603	269
24-016032	B36-1603	270
24-016032	B36-1603	274
24-016032	B36-1603	275
24-016032	B36-1603	531
24-016032	B36-1603	532
24-016049	B36-1604	1
24-016049	B36-1604	269

New order number – Old order number

New	Old	Page
24-016049	B36-1604	270
24-016049	B36-1604	274
24-016049	B36-1604	275
24-016049	B36-1604	531
24-016049	B36-1604	532
24-016056	B46-1605	1
24-016056	B46-1605	269
24-016056	B46-1605	270
24-016056	B46-1605	274
24-016056	B46-1605	275
24-016063	B46-1606	264
24-016063	B46-1606	265
24-016063	B46-1606	532
24-016087	B36-1608	264
24-016087	B36-1608	265
24-016087	B36-1608	532
24-016094	B36-1609	264
24-016094	B36-1609	265
24-016094	B36-1609	532
24-016100	B46-1610	262
24-016100	B46-1610	426
24-016100	B46-1610	459
24-016100	B46-1610	622
24-016100	B46-1610	625
24-016124	B36-1612	334
24-016124	B36-1612	335
24-016124	B36-1612	339
24-016124	B36-1612	340
24-016124	B36-1612	341
24-016179	B46-1617	252
24-016186	B46-1618	252
24-016193	B46-1619	69
24-016193	B46-1619	671
24-016193	B46-1619	721
24-016193	B46-1619	722
24-016247	B46-1624	177
24-016353	B46-1635	360
24-016353	B46-1635	511
24-016360	B46-1636	360
24-016360	B46-1636	511
24-016377	B36-1637	217
24-016377	B36-1637	219
24-016384	B46-1638	514
24-016391	B36-1639	514
24-016407	B36-1640	653
24-016407	B36-1640	654
24-016407	B36-1640	661
24-016407	B36-1640	662
24-016476	B36-1647	412
24-016476	B36-1647	414
24-016476	B36-1647	445
24-016476	B36-1647	608
24-016476	B36-1647	611
24-016476	B36-1647	620
24-016483	B36-1648	412
24-016483	B36-1648	414
24-016483	B36-1648	445
24-016483	B36-1648	608
24-016483	B36-1648	611
24-016483	B36-1648	620
24-016582	*B46-1658*	*458*
24-016582	*B46-1658*	*459*
24-016582	*B46-1658*	*625*
24-016629	B46-1662	659
24-016629	B46-1662	660
24-016629	B46-1662	662
24-016629	B46-1662	663
24-016636	B46-1663	1
24-016636	B46-1663	275
24-016650	B46-1665	1
24-016650	B46-1665	275
24-016681	B36-1668	339
24-016681	B36-1668	341
24-016728	*B46-1672*	*402*
24-016735	*B46-1673*	*402*
24-016766	B46-1676	295
24-016766	B46-1676	435
24-016766	B46-1676	576
24-016766	B46-1676	631
24-016773	B46-1677	295
24-016773	B46-1677	435
24-016773	B46-1677	631
24-016780	*B36-1678*	*276*
24-016797	*B36-1679*	*276*
24-016810	B46-1681	150
24-016810	B46-1681	158
24-016827	B36-1682	354
24-016834	B46-1683	354
24-016964	*B36-1696*	*74*
24-016964	*B36-1696*	*75*
24-016971	B46-1697	150
24-016971	B46-1697	151
24-016971	B46-1697	152
24-016988	*B46-1698*	*150*
24-016988	*B46-1698*	*151*
24-016988	*B46-1698*	*152*
24-017015	B46-1701	526
24-017015	B46-1701	527
24-017015	B46-1701	528
24-017015	B46-1701	529
24-017060	B36-1706	354
24-017077	B46-1707	354
24-017176	B46-1717	526
24-017176	B46-1717	527
24-017176	B46-1717	528
24-017176	B46-1717	529
24-017183	B46-1718	526
24-017183	B46-1718	527
24-017183	B46-1718	528
24-017183	B46-1718	529
24-017213	B36-1721	264
24-017213	B36-1721	265
24-017213	B36-1721	532
24-017220	B36-1722	264
24-017220	B36-1722	265
24-017220	B36-1722	532
24-017237	B46-1723	264
24-017237	B46-1723	265
24-017237	B46-1723	532
24-017275	B46-1727	360
24-017275	B46-1727	511
24-017282	B46-1728	360
24-017282	B46-1728	511
24-017343	B46-1734	360
24-017350	B46-1735	499
24-017350	B46-1735	500
24-017381	B46-1738	282
24-017381	B46-1738	448
24-017381	B46-1738	633
24-017398	B46-1739	448
24-017398	B46-1739	633
24-017428	B46-1742	389
24-017435	B46-1743	389
24-017442	B46-1744	390
24-017473	B36-1747	269
24-017480	B36-1748	269
24-017497	B46-1749	269
24-017503	B46-1750	394
24-017534	B46-1753	217
24-017534	B46-1753	218
24-017534	B46-1753	219
24-017534	B46-1753	220
24-017534	B46-1753	241
24-017701	B46-1770	281
24-017701	B46-1770	449
24-017701	B46-1770	451
24-017701	B46-1770	623
24-017763	*B36-1776*	*276*
24-017787	*B46-1778*	*312*
24-017794	*B46-1779*	*312*
24-017824	B46-1782	281
24-017824	B46-1782	399
24-017824	B46-1782	400
24-017831	*B46-1783*	*296*
24-017848	*B46-1784*	*296*
24-017855	B36-1785	538
24-017923	B46-1792	602
24-017930	B46-1793	602
24-017947	B46-1794	386
24-017947	B46-1794	387
24-017954	B46-1795	386
24-017954	B46-1795	387
24-017985	B46-1798	286
24-017992	B46-1799	286
24-018005	B46-1800	188
24-018005	B46-1800	189
24-018005	B46-1800	190
24-018005	B46-1800	206
24-018005	B46-1800	207
24-018005	B46-1800	291
24-018043	B36-1804	186
24-018043	B36-1804	283
24-018050	B46-1805	186
24-018050	B46-1805	283
24-018067	B46-1806	243
24-018067	B46-1806	244
24-018067	B46-1806	245
24-018074	B46-1807	243
24-018074	B46-1807	244
24-018074	B46-1807	245
24-018197	B46-1819	150
24-018197	B46-1819	159
24-018333	B46-1833	511
24-018333	B46-1833	512
24-018432	B36-1843	74
24-018449	B36-1844	73
24-018548	B36-1854	319
24-018548	B36-1854	320
24-018555	B36-1855	319
24-018555	B36-1855	320
24-018555	B36-1855	330
24-018555	B36-1855	331
24-018562	B36-1856	319
24-018562	B36-1856	320
24-018579	B36-1857	319
24-018579	B36-1857	320
24-018579	B36-1857	330
24-018586	B46-1858	186
24-018586	B46-1858	284
24-018593	B46-1859	360
24-018593	B46-1859	511
24-018609	B46-1860	360
24-018609	B46-1860	511
24-018616	B36-1861	186
24-018616	B36-1861	284
24-018630	B36-1863	284
24-018647	B46-1864	284
24-018692	B46-1869	295
24-018692	B46-1869	296
24-018708	B46-1870	295
24-018708	B46-1870	296
24-018739	B46-1873	402
24-018739	B46-1873	403
24-018753	*B36-1875*	*600*
24-018999	*B46-1899*	*148*
24-019118	B46-1911	742
24-019156	B36-1915	523
24-019163	B46-1916	390
24-019163	B46-1916	402
24-019163	B46-1916	403
24-020251	B46-2025	296
24-020268	B46-2026	296
24-020275	B36-2027	12
24-020275	B36-2027	13
24-020275	B36-2027	92
24-020275	B36-2027	93
24-020275	B36-2027	94
24-020275	B36-2027	97
24-020282	B36-2028	92
24-020282	B36-2028	93
24-020282	B36-2028	94
24-020282	B36-2028	97
24-020336	B46-2033	150
24-020336	B46-2033	151
24-020336	B46-2033	152
24-020404	*B46-2040*	*150*
24-020404	*B46-2040*	*151*
24-020404	*B46-2040*	*160*
24-020411	B46-2041	159
24-020411	B46-2041	160
24-020428	B46-2042	159
24-020428	B46-2042	160
24-020435	*B46-2043*	*150*
24-020435	*B46-2043*	*151*
24-020459	B46-2045	279
24-020473	B46-2047	678
24-020480	B46-2048	678
24-020480	B46-2048	679
24-020503	B36-2050	70
24-020503	B36-2050	71
24-020503	B36-2050	72
24-020503	B36-2050	73
24-020503	B36-2050	76
24-020503	B36-2050	77
24-020510	B36-2051	70
24-020510	B36-2051	71
24-020510	B36-2051	72
24-020510	B36-2051	73
24-020510	B36-2051	76
24-020527	B36-2052	507
24-020527	B36-2052	508
24-020534	B46-2053	155
24-020541	B46-2054	155
24-020558	B46-2055	155
24-020602	B36-2060	218
24-020602	B36-2060	243
24-020602	B36-2060	244
24-020602	B36-2060	245
24-020657	B46-2065	53
24-020657	B46-2065	54
24-020657	B46-2065	64
24-020657	B46-2065	79
24-020657	B46-2065	80
24-020657	B46-2065	81
24-020657	B46-2065	82
24-020657	B46-2065	83
24-020657	B46-2065	84
24-020664	B46-2066	53
24-020664	B46-2066	54
24-020664	B46-2066	64
24-020664	B46-2066	79
24-020664	B46-2066	80
24-020664	B46-2066	81
24-020664	B46-2066	82
24-020664	B46-2066	83
24-020664	B46-2066	84
24-020749	B36-2074	480
24-020749	B36-2074	481
24-020756	B36-2075	163
24-020756	B36-2075	174
24-020756	B36-2075	472
24-020756	B36-2075	473
24-020763	B46-2076	235
24-020763	B46-2076	406
24-020770	B46-2077	235
24-020770	B46-2077	397
24-020770	B46-2077	398
24-020770	B46-2077	405
24-020770	B46-2077	406
24-020787	B46-2078	576
24-020794	B36-2079	25
24-020794	B36-2079	26
24-020794	B36-2079	29
24-020794	B36-2079	56
24-020794	B36-2079	58
24-020794	B36-2079	85
24-020794	B36-2079	709
24-020794	B36-2079	710
24-020800	B36-2080	25
24-020800	B36-2080	29
24-020817	B36-2081	26
24-020817	B36-2081	30
24-020817	B36-2081	56
24-020817	B36-2081	58
24-020817	B36-2081	59
24-020817	B36-2081	85
24-020817	B36-2081	709
24-020817	B36-2081	710
24-020824	B36-2082	26
24-020824	B36-2082	30
24-020879	B46-2087	150
24-020909	*B36-2090*	*283*
24-021050	B46-2105	276
24-021074	B46-2107	402
24-021074	B46-2107	403
24-021081	B46-2108	402
24-021081	B46-2108	403
24-021098	B46-2109	387
24-021104	B46-2110	387
24-021111	B46-2111	387
24-021142	B46-2114	1
24-021142	B46-2114	264
24-021197	B36-2119	543
24-021197	B36-2119	544
24-021197	B36-2119	549
24-021197	B36-2119	722
24-021197	B36-2119	724
24-021197	B36-2119	725
24-021203	B36-2120	600
24-021210	B36-2121	600
24-021227	B36-2122	543
24-021227	B36-2122	544
24-021227	B36-2122	548
24-021227	B36-2122	549
24-021227	B36-2122	722
24-021227	B36-2122	724
24-021227	B36-2122	725
24-021289	B46-2128	598
24-021289	B46-2128	733
24-021319	B46-2131	252
24-021326	B46-2132	252
24-021333	B46-2133	252
24-021340	B46-2134	252
24-021357	B36-2135	252
24-021364	B46-2136	149
24-021388	B46-2138	133
24-021487	*B46-2148*	*252*
24-021494	*B36-2149*	*252*
24-021524	B46-2152	295
24-021531	B46-2153	295
24-021548	B36-2154	343
24-021548	B36-2154	344
24-021555	B36-2155	343
24-021555	B36-2155	344
24-021562	B36-2156	344
24-021579	B36-2157	344
24-021609	*B46-2160*	*523*
24-021685	B46-2168	2
24-021685	B46-2168	3
24-021685	B46-2168	191
24-021791	B46-2179	147
24-021791	B46-2179	160
24-021890	B46-2189	218
24-021906	B46-2190	214
24-022033	B36-2203	659
24-022033	B36-2203	660
24-022033	B36-2203	661
24-022118	B46-2211	656
24-022118	B46-2211	657
24-022118	B46-2211	658
24-022149	B46-2214	295
24-022156	B46-2215	295
24-022217	B46-2221	512
24-022354	B36-2235	294
24-022477	B46-2247	159
24-022484	B46-2248	159
24-022576	B36-2257	356
24-022583	B46-2258	450
24-022583	B46-2258	636
24-022590	B46-2259	449
24-022590	B46-2259	451
24-022590	B46-2259	636
24-022606	B46-2260	450
24-022606	B46-2260	636
24-022989	BE5-2298	435
24-022989	BE5-2298	631
24-023368	BE5-2336	270
24-023375	BE5-2337	270
24-023382	BE5-2338	273
24-023399	BE5-2339	273
24-023405	BE5-2340	1
24-023405	BE5-2340	275
24-023412	BE5-2341	1
24-023412	BE5-2341	275
24-023429	*BE5-2342*	*394*
24-023443	BE5-2344	400
24-023450	BE5-2345	397
24-023528	*BE5-2352*	*601*
24-023719	BE5-2371	1
24-023719	BE5-2371	264
24-023726	BE3-2372	284
24-023733	BE5-2373	284
24-023740	BE3-2374	284
24-023757	BE5-2375	284
24-023863	BE3-2386	137
24-023900	BE3-2390	154
24-023900	BE3-2390	261
24-023900	BE3-2390	429
24-023900	BE3-2390	431
24-023900	BE3-2390	456
24-023900	BE3-2390	627
24-023900	BE3-2390	634
24-023900	BE3-2390	635
24-023900	BE3-2390	639
24-023917	BE3-2391	154
24-023917	BE3-2391	260
24-023917	BE3-2391	261
24-023917	BE3-2391	428
24-023917	BE3-2391	429
24-023917	BE3-2391	431
24-023917	BE3-2391	456
24-023917	BE3-2391	627
24-023917	BE3-2391	634
24-023917	BE3-2391	635
24-023917	BE3-2391	639
24-024051	BE5-2405	159
24-024051	BE5-2405	160
24-024068	BE5-2406	152
24-024068	BE5-2406	496
24-024075	BE5-2407	152
24-024075	BE5-2407	496
24-024129	BE5-2412	160
24-024136	BE5-2413	160
24-024167	BE5-2416	159
24-024174	BE5-2417	159
24-024181	BE5-2418	159
24-024181	BE5-2418	160
24-024198	BE5-2419	159
24-024198	BE5-2419	160
24-024211	*BE5-2421*	*159*
24-024211	*BE5-2421*	*160*
24-024228	BE5-2422	159
24-024235	BE5-2423	159
24-024242	BE5-2424	147
24-024426	BE5-2442	287
24-024433	BE5-2443	287
24-024457	BE3-2445	185
24-024457	BE3-2445	283
24-024464	BE3-2446	185
24-024464	BE3-2446	283
24-024518	BE5-2451	603
24-024532	BE5-2453	13
24-024532	BE5-2453	95
24-024532	BE5-2453	98
24-024532	BE5-2453	100
24-024648	BE3-2464	356
24-024655	BE3-2465	356
24-024662	BE5-2466	187
24-024662	BE5-2466	197
24-024662	BE5-2466	198
24-024679	BE5-2467	187
24-024679	BE5-2467	197
24-024679	BE5-2467	198
24-024693	BE3-2469	396
24-024815	BE5-2481	156
24-024846	*BE5-2484*	*181*
24-024846	*BE5-2484*	*182*
24-024846	*BE5-2484*	*183*
24-024846	*BE5-2484*	*255*
24-024846	*BE5-2484*	*440*
24-024846	*BE5-2484*	*443*
24-024846	*BE5-2484*	*444*
24-024846	*BE5-2484*	*446*
24-024846	*BE5-2484*	*604*
24-024846	*BE5-2484*	*605*
24-024846	*BE5-2484*	*607*
24-024884	BE5-2488	218
24-024921	BE3-2492	282
24-025027	BE5-2502	150
24-025027	BE5-2502	160
24-025256	BE3-2525	356
24-025263	BE3-2526	356
24-025287	BE5-2528	372
24-025324	BE3-2532	56
24-025324	BE3-2532	85
24-025324	BE3-2532	709
24-025324	BE3-2532	710
24-025331	BE3-2533	56
24-025331	BE3-2533	85
24-025331	BE3-2533	709

New order number – Old order number

New	Old	Page
24-025331	BE3-2533	710
24-025386	BE5-2538	537
24-025409	*BE5-2540*	*502*
24-025430	BE3-2543	16
24-025430	BE3-2543	566
24-025447	BE3-2544	16
24-025447	BE3-2544	566
24-025508	*BE5-2550*	*186*
24-025508	*BE5-2550*	*187*
24-025515	BE3-2551	160
24-025515	BE3-2551	460
24-025515	BE3-2551	461
24-025515	BE3-2551	462
24-025515	BE3-2551	640
24-025515	BE3-2551	641
24-025515	BE3-2551	642
24-025522	BE3-2552	460
24-025522	BE3-2552	461
24-025522	BE3-2552	462
24-025522	BE3-2552	641
24-025652	BE5-2565	156
24-025683	BE5-2568	151
24-025683	BE5-2568	152
24-025706	BE5-2570	156
24-025768	*BE3-2576*	*87*
24-025775	*BE3-2577*	*87*
24-025782	*BE5-2578*	*286*
24-025799	BE5-2579	286
24-025829	BE5-2582	382
24-025836	BE3-2583	382
24-025935	BE5-2593	53
24-025935	BE5-2593	54
24-025935	BE5-2593	81
24-025935	BE5-2593	82
24-025935	BE5-2593	83
24-025935	BE5-2593	84
24-025980	BE3-2598	330
24-025980	BE3-2598	331
24-025997	BE3-2599	330
24-025997	BE3-2599	331
24-026017	BE3-2601	706
24-026017	BE3-2601	707
24-026017	BE3-2601	708
24-026017	BE3-2601	729
24-026017	BE3-2601	730
24-026055	*BE3-2605*	*11*
24-026055	*BE3-2605*	*12*
24-026093	BE3-2609	64
24-026161	BE5-2616	64
24-026192	BE3-2619	544
24-026192	BE3-2619	545
24-026192	BE3-2619	546
24-026192	BE3-2619	550
24-026192	BE3-2619	725
24-026208	BE3-2620	544
24-026208	BE3-2620	545
24-026208	BE3-2620	546
24-026208	BE3-2620	550
24-026208	BE3-2620	725
24-026215	BE3-2621	26
24-026222	BE3-2622	26
24-026239	BE3-2623	553
24-026239	BE3-2623	559
24-026239	BE3-2623	665
24-026239	BE3-2623	680
24-026239	BE3-2623	700
24-026239	BE3-2623	701
24-026239	BE3-2623	747
24-026246	BE3-2624	553
24-026246	BE3-2624	559
24-026246	BE3-2624	666
24-026246	BE3-2624	680
24-026246	BE3-2624	700
24-026246	BE3-2624	701
24-026246	BE3-2624	747
24-026314	BE5-2631	512
24-026413	BE5-2641	224
24-026413	BE5-2641	234
24-026413	BE5-2641	241
24-026505	BE5-2650	519
24-026512	BE5-2651	518
24-026512	BE5-2651	519
24-026529	BE5-2652	135
24-026604	BE5-2660	220
24-026604	BE5-2660	221
24-026611	*BE5-2661*	*221*
24-026628	BE5-2662	282
24-026703	*BE5-2670*	*160*
24-026727	*BE5-2672*	*160*
24-026758	BE5-2675	598
24-026758	BE5-2675	733
24-026895	BE5-2689	220
24-026895	BE5-2689	221
24-026901	*BE5-2690*	*221*
24-026970	BE3-2697	102
24-026970	BE3-2697	103
24-026970	BE3-2697	105
24-026970	BE3-2697	106
24-026970	BE3-2697	108
24-026970	BE3-2697	141
24-026987	BE3-2698	102
24-026987	BE3-2698	105
24-026987	BE3-2698	106
24-026987	BE3-2698	108
24-026987	BE3-2698	141
24-026994	BE3-2699	58
24-027007	BE3-2700	58
24-027045	BE3-2704	203
24-027083	BE3-2708	534
24-027083	BE3-2708	535
24-027090	BE3-2709	534
24-027090	BE3-2709	535
24-027113	BE5-2711	241
24-027182	BE5-2718	137
24-027243	BE5-2724	95
24-027243	BE5-2724	98
24-027243	BE5-2724	100
24-027243	BE5-2724	101
24-027250	BE5-2725	96
24-027250	BE5-2725	98
24-027250	BE5-2725	100
24-027250	BE5-2725	101
24-027267	*BE5-2726*	*603*
24-027274	*BE5-2727*	*603*
24-027304	BE5-2730	137
24-027342	BE5-2734	296
24-027359	BE5-2735	296
24-027366	*BE5-2736*	*182*
24-027397	BE5-2739	599
24-027403	BE5-2740	599
24-027410	BE5-2741	599
24-027434	BE5-2743	296
24-027441	BE5-2744	296
24-027458	BE3-2745	314
24-027465	BE3-2746	314
24-027571	BE5-2757	532
24-027588	BE5-2758	532
24-027618	BE3-2761	668
24-027717	BE5-2771	253
24-027717	BE5-2771	254
24-027724	BE5-2772	253
24-027724	BE5-2772	254
24-027786	BE5-2778	599
24-027823	BE5-2782	148
24-027823	BE5-2782	149
24-027823	BE5-2782	256
24-027823	BE5-2782	257
24-027823	BE5-2782	258
24-027823	BE5-2782	260
24-027823	BE5-2782	415
24-027823	BE5-2782	416
24-027823	BE5-2782	417
24-027823	BE5-2782	418
24-027823	BE5-2782	419
24-027823	BE5-2782	612
24-027823	BE5-2782	613
24-027823	BE5-2782	615
24-027823	BE5-2782	616
24-027823	BE5-2782	621
24-027830	BE5-2783	148
24-027830	BE5-2783	256
24-027830	BE5-2783	257
24-027830	BE5-2783	258
24-027830	BE5-2783	260
24-027830	BE5-2783	415
24-027830	BE5-2783	416
24-027830	BE5-2783	418
24-027830	BE5-2783	419
24-027830	BE5-2783	612
24-027830	BE5-2783	614
24-027830	BE5-2783	615
24-027830	BE5-2783	616
24-027847	BE5-2784	148
24-027847	BE5-2784	257
24-027847	BE5-2784	417
24-027847	BE5-2784	419
24-027847	BE5-2784	615
24-027847	BE5-2784	621
24-027960	BE3-2796	4
24-027960	BE3-2796	5
24-027960	BE3-2796	6
24-027960	BE3-2796	10
24-027977	BE3-2797	4
24-027977	BE3-2797	5
24-027977	BE3-2797	6
24-027977	BE3-2797	10
24-028004	BE3-2800	567
24-028011	BE3-2801	567
24-028028	BE5-2802	296
24-028035	BE5-2803	296
24-028066	BE3-2806	542
24-028066	BE3-2806	700
24-028073	BE3-2807	542
24-028073	BE3-2807	700
24-028172	BE3-2817	137
24-028288	BE5-2828	124
24-028295	BE5-2829	13
24-028295	BE5-2829	124
24-028295	BE5-2829	125
24-028318	BE5-2831	435
24-028318	BE5-2831	631
24-028929	BE3-2892	475
24-028929	BE3-2892	476
24-029025	BE5-2902	159
24-029056	BE5-2905	159
24-029063	BE5-2906	159
24-029070	BE5-2907	159
24-029513	*BE5-2951*	*579*
24-029636	BE5-2963	286
24-029643	BE5-2964	286
24-029728	BE3-2972	152
24-029759	BE5-2975	155
24-029766	BE5-2976	155
24-029773	BE5-2977	155
24-029780	BE5-2978	155
24-029810	BE5-2981	285
24-029858	BE5-2985	358
24-029865	BE5-2986	435
24-029865	BE5-2986	631
24-029896	BE5-2989	161
24-029896	BE5-2989	263
24-029896	BE5-2989	469
24-029896	BE5-2989	648
24-029902	BE5-2990	161
24-029902	BE5-2990	263
24-029902	BE5-2990	469
24-029902	BE5-2990	649
24-029933	BE5-2993	501
24-029933	BE5-2993	502
24-029933	BE5-2993	503
24-029940	BE5-2994	501
24-029940	BE5-2994	502
24-029940	BE5-2994	503
24-044578	*BE3-04457*	*244*
24-060196	BE3-6019	663
24-060196	BE3-6019	664
24-060288	BE5-6028	266
24-060288	BE5-6028	267
24-060288	BE5-6028	268
24-060295	BE5-6029	266
24-060295	BE5-6029	267
24-060295	BE5-6029	268
24-060301	BE5-6030	266
24-060301	BE5-6030	267
24-060301	BE5-6030	268
24-060318	BE5-6031	266
24-060318	BE5-6031	267
24-060318	BE5-6031	268
24-060325	BE3-6032	66
24-060325	BE3-6032	67
24-060332	BE3-6033	66
24-060332	BE3-6033	67
24-060349	BE5-6034	16
24-060349	BE5-6034	66
24-060349	BE5-6034	67
24-060349	BE5-6034	553
24-060349	BE5-6034	559
24-060349	BE5-6034	566
24-060349	BE5-6034	567
24-060349	BE5-6034	665
24-060349	BE5-6034	667
24-060349	BE5-6034	680
24-060349	BE5-6034	682
24-060356	BE5-6035	16
24-060356	BE5-6035	66
24-060356	BE5-6035	67
24-060356	BE5-6035	553
24-060356	BE5-6035	559
24-060356	BE5-6035	566
24-060356	BE5-6035	567
24-060356	BE5-6035	666
24-060356	BE5-6035	667
24-060356	BE5-6035	680
24-060356	BE5-6035	683
24-060417	BE5-6041	531
24-060417	BE5-6041	532
24-060424	BE5-6042	531
24-060424	BE5-6042	532
24-060431	BE5-6043	398
24-060448	BE5-6044	398
24-060462	BE5-6046	294
24-060479	BE5-6047	294
24-060486	BE5-6048	296
24-060493	BE5-6049	296
24-060554	BE3-6055	531
24-060554	BE3-6055	532
24-060561	BE3-6056	531
24-060561	BE3-6056	532
24-060608	BE3-6060	175
24-060608	BE3-6060	176
24-060615	BE5-6061	126
24-060646	BE3-6064	199
24-060653	BE5-6065	12
24-060653	BE5-6065	13
24-060653	BE5-6065	92
24-060653	BE5-6065	94
24-060813	BE5-6081	150
24-060813	BE5-6081	159
24-060813	BE5-6081	160
24-060813	BE5-6081	276
24-060820	BE5-6082	159
24-060905	BE3-6090	343
24-060905	BE3-6090	345
24-060950	BE5-6095	224
24-060950	BE5-6095	234
24-060950	BE5-6095	241
24-060967	BE5-6096	13
24-060967	BE5-6096	126
24-060974	BE5-6097	8
24-060981	BE5-6098	8
24-060998	BE5-6099	8
24-061001	BE5-6100	8
24-061025	BE5-6102	286
24-061032	BE5-6103	286
24-061308	BE5-6130	500
24-061308	BE5-6130	501
24-062039	BE3-6203	344
24-062046	BE3-6204	344
24-062053	BE3-6205	344
24-062114	BE3-6211	29
24-062121	BE3-6212	26
24-062121	BE3-6212	29
24-062121	BE3-6212	74
24-062121	BE3-6212	75
24-062138	BE3-6213	26
24-062138	BE3-6213	30
24-062145	BE3-6214	26
24-062145	BE3-6214	30
24-062145	BE3-6214	74
24-062145	BE3-6214	75
24-062275	BE5-6227	285
24-062596	BE3-6259	26
24-062596	BE3-6259	29
24-062596	BE3-6259	30
24-062657	BE5-6265	285
24-062718	BE5-6271	387
24-062725	BE5-6272	387
24-064095	BE3-6409	667
24-064095	BE3-6409	682
24-064101	BE3-6410	667
24-064101	BE3-6410	683
24-064187	*BE5-6418*	*252*
24-064255	BE5-6425	387
24-064569	BE5-6456	358
24-064606	BE5-6460	186
24-064927	BE5-6492	285
24-065009	BE5-6500	149
24-065009	BE5-6500	159
24-065009	BE5-6500	160
24-065085	BE5-6508	56
24-065085	BE5-6508	58
24-065085	BE5-6508	85
24-065092	BE5-6509	56
24-065092	BE5-6509	58
24-065092	BE5-6509	710
24-065092	BE5-6509	713
24-065092	BE5-6509	715
24-065108	BE5-6510	56
24-065108	BE5-6510	58
24-065108	BE5-6510	59
24-065108	BE5-6510	85
24-065115	BE5-6511	56
24-065115	BE5-6511	59
24-065115	BE5-6511	710
24-065115	BE5-6511	713
24-065115	BE5-6511	715
24-065122	BE5-6512	26
24-065122	BE5-6512	29
24-065122	BE5-6512	572
24-065122	BE5-6512	710
24-065122	BE5-6512	712
24-065122	BE5-6512	713
24-065122	BE5-6512	715
24-065139	BE5-6513	26
24-065139	BE5-6513	30
24-065139	BE5-6513	572
24-065139	BE5-6513	710
24-065139	BE5-6513	713
24-065139	BE5-6513	715
24-065146	BE5-6514	34
24-065146	BE5-6514	37
24-065146	BE5-6514	39
24-065153	BE5-6515	34
24-065153	BE5-6515	37
24-065153	BE5-6515	39
24-065160	BE5-6516	34
24-065160	BE5-6516	37
24-065160	BE5-6516	39
24-065177	BE5-6517	34
24-065177	BE5-6517	37
24-065177	BE5-6517	39
24-065184	BE3-6518	580
24-065191	BE3-6519	475
24-065191	BE3-6519	476
24-065191	BE3-6519	477
24-065290	BE5-6529	294
24-065382	BE5-6538	186
24-065405	BE5-6540	294
24-065429	BE5-6542	56
24-065429	BE5-6542	85
24-065429	BE5-6542	572
24-065429	BE5-6542	712
24-065436	BE5-6543	56
24-065436	BE5-6543	85
24-065436	BE5-6543	572
24-065436	BE5-6543	713
24-065443	BE5-6544	58
24-065443	BE5-6544	715
24-065450	BE5-6545	58
24-065450	BE5-6545	715
24-065504	BE5-6550	310
24-065511	BE5-6551	310
24-065528	BE5-6552	287
24-065580	BE5-6558	310
24-065597	BE5-6559	310
24-065733	BE5-6573	512
24-065733	BE5-6573	513
24-065740	BE5-6574	513
24-065955	BE3-6595	282
24-066457	BE5-6645	282
24-066471	BE5-6647	276
24-066648	BE5-6664	282
24-066655	BE5-6665	227
24-066662	BE5-6666	227
24-066679	BE5-6667	228
24-066754	BE5-6675	238
24-066761	BE5-6676	285
24-066778	BE5-6677	285
24-066785	BE5-6678	64
24-067263	BE5-6726	284
24-067270	BE5-6727	284
24-067287	BE3-6728	282
24-067430	BE3-6743	283
24-067447	BE3-6744	282
24-067454	BE5-6745	282
24-067461	BE5-6746	382
24-067478	BE3-6747	382
24-067577	BE3-6757	103
24-067713	BE5-6771	282
24-067720	BE5-6772	283
24-067782	BE5-6778	283
24-067799	BE3-6779	283
24-067829	BE3-6782	313
24-067898	BE3-6789	14
24-067898	BE3-6789	15
24-067898	BE3-6789	546
24-067898	BE3-6789	550
24-067898	BE3-6789	551
24-067898	BE3-6789	552
24-067898	BE3-6789	562
24-067898	BE3-6789	563
24-067898	BE3-6789	564
24-067898	BE3-6789	572
24-067898	BE3-6789	726
24-067898	BE3-6789	727
24-067904	BE3-6790	14
24-067904	BE3-6790	15
24-067904	BE3-6790	546
24-067904	BE3-6790	550
24-067904	BE3-6790	551
24-067904	BE3-6790	552
24-067904	BE3-6790	562
24-067904	BE3-6790	563
24-067904	BE3-6790	564
24-067904	BE3-6790	572
24-067904	BE3-6790	726
24-067904	BE3-6790	727
24-067911	BE5-6791	190
24-067911	BE5-6791	204
24-067911	BE5-6791	292
24-067928	BE5-6792	190
24-067928	BE5-6792	204
24-067928	BE5-6792	292
24-067935	BE5-6793	652
24-067935	BE5-6793	654
24-067935	BE5-6793	655
24-067942	BE5-6794	652
24-067942	BE5-6794	654
24-067942	BE5-6794	655
24-067966	*BE3-6796*	*583*
24-068116	BE5-6811	501
24-068116	BE5-6811	502
24-068598	BE5-6859	501
24-068598	BE5-6859	502
24-068604	BE5-6860	170
24-068604	BE5-6860	171
24-068604	BE5-6860	482
24-068604	BE5-6860	483
24-068604	BE5-6860	484
24-068611	BE5-6861	170
24-068611	BE5-6861	171
24-068611	BE5-6861	482
24-068611	BE5-6861	483
24-068611	BE5-6861	484
24-068659	BE3-6865	102
24-068659	BE3-6865	105
24-068659	BE3-6865	108
24-068666	BE3-6866	13
24-068666	BE3-6866	102
24-068666	BE3-6866	105

New order number – Old order number

New	Old	Page
24-068666	BE3-6866	108
24-068734	BE3-6873	348
24-068741	BE3-6874	348
24-068802	BE3-6880	321
24-068802	BE3-6880	323
24-068802	BE3-6880	324
24-068802	BE3-6880	325
24-068802	BE3-6880	331
24-068819	BE3-6881	321
24-068819	BE3-6881	323
24-068819	BE3-6881	324
24-068819	BE3-6881	326
24-068819	BE3-6881	332
24-069052	BE5-6905	347
24-069052	BE5-6905	349
24-069069	BE3-6906	347
24-069076	BE5-6907	347
24-069076	BE5-6907	349
24-069083	BE3-6908	333
24-069083	BE3-6908	347
24-069243	BE5-6924	596
24-069243	BE5-6924	597
24-069243	BE5-6924	598
24-069250	BE5-6925	596
24-069250	BE5-6925	597
24-069250	BE5-6925	598
24-069274	*BE5-6927*	*186*
24-069281	*BE5-6928*	*187*
24-069366	BE3-6936	316
24-069533	*BE5-6953*	*715*
24-069540	*BE5-6954*	*715*
24-069601	BE5-6960	144
24-069601	BE5-6960	146
24-069601	BE5-6960	191
24-069601	BE5-6960	455
24-069601	BE5-6960	463
24-069601	BE5-6960	465
24-069601	BE5-6960	468
24-069601	BE5-6960	638
24-069601	BE5-6960	643
24-069601	BE5-6960	645
24-069601	BE5-6960	647
24-069618	BE5-6961	144
24-069618	BE5-6961	146
24-069618	BE5-6961	191
24-069618	BE5-6961	455
24-069618	BE5-6961	464
24-069618	BE5-6961	465
24-069618	BE5-6961	468
24-069618	BE5-6961	638
24-069618	BE5-6961	644
24-069618	BE5-6961	645
24-069618	BE5-6961	647
24-069687	BE5-6968	483
24-100397	BE3-A039	319
24-100397	BE3-A039	320
24-100403	BE3-A040	319
24-100403	BE3-A040	320
24-100403	BE3-A040	330
24-100403	BE3-A040	331
24-100427	BE3-A042	317
24-100441	BE3-A044	334
24-100441	BE3-A044	339
24-100441	BE3-A044	340
24-100441	BE3-A044	341
24-100458	BE3-A045	344
24-100465	BE3-A046	344
24-100540	BE3-A054	343
24-100540	BE3-A054	345
24-100557	BE3-A055	343
24-100564	BE3-A056	343
24-100571	BE3-A057	343
24-100571	BE3-A057	344
24-100571	BE3-A057	345
24-100588	BE3-A058	343
24-100588	BE3-A058	344
24-100595	BE3-A059	330
24-100878	BE3-A087	356
24-100885	BE3-A088	356
24-101561	BE5-A156	391
24-101578	BE5-A157	391
24-101585	BE5-A158	391
24-101707	*BE5-A170*	*579*
24-101813	BE5-A181	289
24-102520	BE5-A252	147
24-102520	BE5-A252	533
24-102551	BE5-A255	147
24-102551	BE5-A255	533
24-102551	BE5-A255	534
24-102568	BE5-A256	308
24-102568	BE5-A256	309
24-102575	BE5-A257	308
24-102575	BE5-A257	309
24-102582	BE5-A258	308
24-102582	BE5-A258	309
24-102599	BE5-A259	308
24-102599	BE5-A259	309
24-102605	BE5-A260	308
24-102605	BE5-A260	309
24-102612	BE5-A261	308
24-102612	BE5-A261	309
24-102636	BE5-A263	520
24-102636	BE5-A263	521
24-102636	BE5-A263	522
24-102636	BE5-A263	523
24-102650	BE5-A265	520
24-102650	BE5-A265	521
24-102650	BE5-A265	523
24-102667	BE5-A266	205
24-102674	BE5-A267	205
24-103251	BE3-A325	373
24-103251	BE3-A325	374
24-103336	*BE5-A333*	*160*
24-103336	*BE5-A333*	*281*
24-103336	*BE5-A333*	*535*
24-103343	BE5-A334	160
24-103343	BE5-A334	535
24-103350	*BE5-A335*	*160*
24-103350	*BE5-A335*	*281*
24-103527	BE5-A352	233
24-103527	BE5-A352	538
24-103527	BE5-A352	732
24-103534	BE5-A353	233
24-103534	BE5-A353	538
24-103534	BE5-A353	732
24-103565	BE3-A356	224
24-103565	BE3-A356	298
24-103596	BE3-A359	224
24-103596	BE3-A359	298
24-104050	BE5-A405	147
24-104050	BE5-A405	150
24-104050	BE5-A405	151
24-104050	BE5-A405	152
24-104050	BE5-A405	159
24-104050	BE5-A405	160
24-104371	BE3-A437	314
24-104401	BE3-A440	232
24-104616	BE3-A461	314
24-104807	BE5-A480	599
24-104814	BE5-A481	599
24-104906	BE3-A490	137
24-104906	BE3-A490	138
24-104937	BE3-A493	138
24-105804	BE3-A580	294
24-105910	BE3-A591	346
24-105910	BE3-A591	348
24-105927	BE3-A592	333
24-105927	BE3-A592	346
24-105927	BE3-A592	347
24-106290	BE3-A629	332
24-106320	*BE3-A632*	*333*
24-107013	BE5-A701	186
24-107303	BE5-A730	267
24-107303	BE5-A730	268
24-107310	BE5-A731	267
24-107327	BE5-A732	268
24-107440	BE5-A744	136
24-107488	BE5-A748	274
24-107839	*BE3-A783*	*162*
24-107938	BE5-A793	267
24-107945	BE5-A794	268
24-108096	BE5-A809	13
24-108096	BE5-A809	134
24-108256	BE3-A825	343
24-108256	BE3-A825	345
24-108263	BE3-A826	343
24-109116	BE5-A911	743
24-109116	BE5-A911	744
24-109116	BE5-A911	745
24-109116	BE5-A911	746
24-109130	BE5-A913	743
24-109130	BE5-A913	744
24-109130	BE5-A913	745
24-109130	BE5-A913	746
24-109642	BE5-A964	128
24-109642	BE5-A964	142
24-109666	BE5-A966	129
24-109666	BE5-A966	142
24-109987	BE3-A998	161
24-109994	BE3-A999	161
24-110013	BE3-B001	161
24-110044	BE5-B004	312
24-110051	BE5-B005	312
24-110068	BE5-B006	312
24-110075	BE5-B007	312
24-110204	BE3-B020	315
24-110211	BE3-B021	315
24-110570	BE5-B057	509
24-110570	BE5-B057	733
24-110600	BE5-B060	509
24-110600	BE5-B060	733
24-110754	BE5-B075	229
24-111041	BE5-B104	288
24-111058	BE5-B105	288
24-112703	BE5-B270	130
24-112703	BE5-B270	131
24-112727	BE5-B272	130
24-112727	BE5-B272	131
24-113205	BE5-B320	280
24-113212	BE5-B321	280
24-113359	VNE-B335	501
24-113359	VNE-B335	502
24-113366	BE5-B336	359
24-113366	BE5-B336	511
24-113373	BE5-B337	359
24-113373	BE5-B337	511
24-113441	BE3-B344	357
24-113465	BE3-B346	357
24-114240	BE5-B424	271
24-114240	BE5-B424	272
24-114240	BE5-B424	273
24-114455	BE5-B445	284
24-114462	BE5-B446	284
24-114479	*BE5-B447*	*285*
24-114486	*BE5-B448*	*285*
24-114585	BE5-B458	135
24-114653	BE5-B465	258
24-114653	BE5-B465	420
24-114653	BE5-B465	421
24-114653	BE5-B465	422
24-114653	BE5-B465	423
24-114653	BE5-B465	425
24-114653	BE5-B465	617
24-114653	BE5-B465	618
24-114684	BE5-B468	258
24-114684	BE5-B468	420
24-114684	BE5-B468	421
24-114684	BE5-B468	422
24-114684	BE5-B468	423
24-114684	BE5-B468	425
24-114684	BE5-B468	617
24-114684	BE5-B468	618
24-114714	BE3-B471	321
24-114714	BE3-B471	323
24-114714	BE3-B471	324
24-114714	BE3-B471	325
24-114714	BE3-B471	331
24-114714	BE3-B471	332
24-115926	BE5-B592	88
24-115926	BE5-B592	89
24-115926	BE5-B592	90
24-115957	BE5-B595	88
24-115957	BE5-B595	89
24-115957	BE5-B595	90
24-116237	*BE5-B623*	*405*
24-116244	BE5-B624	405
24-116299	BE5-B629	60
24-116299	BE5-B629	62
24-116299	BE5-B629	86
24-116312	BE5-B631	60
24-116312	BE5-B631	62
24-116312	BE5-B631	86
24-118224	BE5-B822	503
24-118224	BE5-B822	505
24-118224	BE5-B822	506
24-118248	BE5-B824	503
24-118248	BE5-B824	505
24-118248	BE5-B824	506
24-118323	BE5-B832	579
24-118354	BE5-B835	579
24-118446	BE5-B844	385
24-118460	BE5-B846	385
24-118576	BE5-B857	161
24-118576	BE5-B857	258
24-118576	BE5-B857	259
24-118576	BE5-B857	424
24-118576	BE5-B857	469
24-118576	BE5-B857	470
24-118576	BE5-B857	619
24-118576	BE5-B857	621
24-118576	BE5-B857	649
24-118927	BE5-B892	391
24-118934	BE5-B893	391
24-118941	BE5-B894	391
24-119788	BE5-B978	34
24-119788	BE5-B978	37
24-119788	BE5-B978	39
24-119788	BE5-B978	43
24-119788	BE5-B978	46
24-119788	BE5-B978	84
24-119788	BE5-B978	547
24-119795	BE5-B979	34
24-119795	BE5-B979	37
24-119795	BE5-B979	39
24-119795	BE5-B979	43
24-119795	BE5-B979	46
24-119795	BE5-B979	84
24-119795	BE5-B979	547
24-119818	BE5-B981	34
24-119818	BE5-B981	37
24-119818	BE5-B981	39
24-119818	BE5-B981	43
24-119818	BE5-B981	46
24-119818	BE5-B981	84
24-119818	BE5-B981	547
24-119825	BE5-B982	34
24-119825	BE5-B982	37
24-119825	BE5-B982	39
24-119825	BE5-B982	43
24-119825	BE5-B982	46
24-119825	BE5-B982	84
24-119825	BE5-B982	547
24-120227	BE3-C022	333
24-120227	BE3-C022	347
24-120234	BE5-C023	333
24-120234	BE5-C023	347
24-120241	BE5-C024	333
24-120241	BE5-C024	347
24-120340	BE3-C034	315
24-120340	BE3-C034	316
24-120364	BE3-C036	314
24-120364	BE3-C036	315
24-120395	BE5-C039	110
24-120395	BE5-C039	112
24-120395	BE5-C039	114
24-120395	BE5-C039	115
24-120395	BE5-C039	142
24-120425	BE5-C042	110
24-120425	BE5-C042	112
24-120425	BE5-C042	114
24-120425	BE5-C042	116
24-120425	BE5-C042	142
24-120708	BE5-C070	127
24-121774	BE3-C177	346
24-121781	BE3-C178	333
24-121781	BE3-C178	346
24-121781	BE3-C178	348
24-121798	BE3-C179	347
24-121934	BE5-C193	359
24-122245	BE5-C224	253
24-122610	*BE5-C261*	*311*
24-122627	*BE5-C262*	*311*
24-122740	BE5-C274	488
24-122740	BE5-C274	489
24-122757	BE5-C275	488
24-122757	BE5-C275	489
24-122764	BE5-C276	488
24-122764	BE5-C276	489
24-122771	BE5-C277	488
24-122771	BE5-C277	489
24-123266	BE3-C326	314
24-124362	BE5-C436	358
24-124379	BE5-C437	358
24-124508	BE5-C450	231
24-124515	BE5-C451	231
24-126649	BE5-C664	358
24-126793	BE3-C679	576
24-128636	BE5-C863	397
24-128636	BE5-C863	514
24-128650	BE5-C865	397
24-128650	BE5-C865	514
24-128780	BE5-C878	7
24-128780	BE5-C878	9
24-128780	BE5-C878	12
24-128797	BE5-C879	7
24-128797	BE5-C879	9
24-128797	BE5-C879	12
24-128803	BE5-C880	7
24-128803	BE5-C880	9
24-128803	BE5-C880	12
24-128810	BE5-C881	7
24-128810	BE5-C881	9
24-128810	BE5-C881	12
24-128933	BE5-C893	149
24-131742	BE5-D174	311
24-131759	BE5-D175	311
24-131766	BE5-D176	311
24-131773	BE5-D177	311
24-132725	BE5-D272	286
24-132732	BE5-D273	286
24-136709	BE5-D670	294
24-136716	BE5-D671	294
24-136822	BE5-D682	68
24-136822	BE5-D682	69
24-136846	BE5-D684	68
24-136846	BE5-D684	69
24-137867	BE5-D786	672
24-137874	BE5-D787	672
24-138284	BE5-D828	478
24-138338	BE5-D833	478
24-139106	BE5-D910	186
24-139113	BE5-D911	186
24-139168	BE5-D916	186
24-139168	BE5-D916	286
24-139175	BE5-D917	186
24-139175	BE5-D917	286
24-139380	BE3-D938	374
24-139380	BE3-D938	375
24-139380	BE3-D938	376
24-139380	BE3-D938	377
24-139397	BE3-D939	374
24-139397	BE3-D939	375
24-139397	BE3-D939	376
24-139397	BE3-D939	377
24-140225	BE5-E022	200
24-140225	BE5-E022	201
24-140225	BE5-E022	434
24-140225	BE5-E022	435
24-140225	BE5-E022	630
24-140225	BE5-E022	631
24-140256	BE5-E025	11
24-140256	BE5-E025	200
24-140256	BE5-E025	201
24-140256	BE5-E025	434
24-140256	BE5-E025	435
24-140256	BE5-E025	630
24-140256	BE5-E025	631
24-140812	BE3-E081	167
24-140812	BE3-E081	168
24-140812	BE3-E081	491
24-140874	BE5-E087	397
24-140874	BE5-E087	398
24-140874	BE5-E087	406
24-140881	BE5-E088	398
24-141086	BE3-E108	262
24-141086	BE3-E108	432
24-141086	BE3-E108	456
24-141086	BE3-E108	629
24-141086	BE3-E108	630
24-141086	BE3-E108	639
24-141116	BE3-E111	262
24-141116	BE3-E111	432
24-141116	BE3-E111	456
24-141116	BE3-E111	629
24-141116	BE3-E111	630
24-141116	BE3-E111	639
24-141352	BE5-E135	295
24-141369	BE5-E136	295
24-141680	BE3-E168	138
24-141727	*BE5-E172*	*287*
24-141734	*BE5-E173*	*287*
24-141789	BE5-E178	128
24-141819	BE5-E181	129
24-141833	BE3-E183	328
24-141833	BE3-E183	329
24-141833	BE3-E183	330
24-141857	BE5-E185	328
24-141857	BE3-E185	329
24-141857	BE3-E185	330
24-141857	BE3-E185	351
24-142182	BE5-E218	231
24-142182	BE5-E218	653
24-142199	BE5-E219	231
24-142199	BE5-E219	653
24-142304	BE3-E230	374
24-142304	BE3-E230	375
24-142304	BE3-E230	376
24-142304	BE3-E230	377
24-142304	BE3-E230	378
24-142311	BE3-E231	374
24-142311	BE3-E231	375
24-142311	BE3-E231	376
24-142311	BE3-E231	377
24-142311	BE3-E231	378
24-142342	BE3-E234	262
24-142342	BE3-E234	432
24-142342	BE3-E234	456
24-142342	BE3-E234	629
24-142342	BE3-E234	630
24-142342	BE3-E234	639
24-143318	BE5-E331	110
24-143318	BE5-E331	114
24-143318	BE5-E331	116
24-143349	BE5-E334	110
24-143349	BE5-E334	114
24-143349	BE5-E334	115
24-143639	BE5-E363	233
24-143639	BE5-E363	239
24-143639	BE5-E363	246
24-143639	BE5-E363	251
24-143639	BE5-E363	655
24-143639	BE5-E363	664
24-143646	BE5-E364	233
24-143646	BE5-E364	239
24-143646	BE5-E364	246
24-143646	BE5-E364	251
24-143646	BE5-E364	655
24-143646	BE5-E364	664
24-143806	BE5-E380	150
24-143806	BE5-E380	160
24-143936	BE5-E393	136
24-143943	BE5-E394	136
24-143950	BE5-E395	136
24-143967	BE5-E396	136
24-143974	BE5-E397	136
24-143981	BE5-E398	136
24-143998	BE3-E399	105
24-143998	BE3-E399	106
24-144384	BE5-E438	397
24-144384	BE5-E438	406
24-144766	*BE5-E476*	*162*
24-144773	*BE5-E477*	*162*
24-144780	*BE5-E478*	*162*
24-144834	BE5-E483	358
24-144889	BE5-E488	359
24-144896	BE5-E489	359
24-144919	BE5-E491	358
24-145404	BE3-E540	361
24-145404	BE3-E540	362
24-145961	BE5-E596	48

New order number – Old order number

New	Old	Page
24-145961	BE5-E596	49
24-145961	BE5-E596	50
24-145961	BE5-E596	51
24-145961	BE5-E596	63
24-145961	BE5-E596	65
24-145961	BE5-E596	85
24-145961	BE5-E596	86
24-145978	BE5-E597	48
24-145978	BE5-E597	49
24-145978	BE5-E597	50
24-145978	BE5-E597	51
24-145978	BE5-E597	63
24-145978	BE5-E597	65
24-145978	BE5-E597	85
24-145978	BE5-E597	86
24-145985	BE5-E598	48
24-145985	BE5-E598	50
24-145985	BE5-E598	51
24-145985	BE5-E598	52
24-145985	BE5-E598	63
24-145985	BE5-E598	65
24-145985	BE5-E598	85
24-145985	BE5-E598	86
24-145992	BE5-E599	48
24-145992	BE5-E599	50
24-145992	BE5-E599	51
24-145992	BE5-E599	52
24-145992	BE5-E599	63
24-145992	BE5-E599	65
24-145992	BE5-E599	85
24-145992	BE5-E599	86
24-146135	BE5-E613	655
24-146708	*BE5-E670*	*287*
24-146715	*BE5-E671*	*287*
24-146944	BE5-E694	65
24-146944	BE5-E694	733
24-147002	BE5-E700	656
24-147477	BE5-E747	503
24-147477	BE5-E747	504
24-147477	BE5-E747	506
24-147484	BE5-E748	503
24-147484	BE5-E748	504
24-147484	BE5-E748	506
24-147644	VNE-E764	501
24-147644	VNE-E764	502
24-151368	BE5-F136	387
24-151375	BE5-F137	387
24-152921	*BE5-F292*	*599*
24-152938	BE5-F293	599
24-155311	BE5-F531	296
24-155328	BE5-F532	296
24-155335	BE5-F533	296
24-156530	BE5-F653	235
24-158428	*BE3-F842*	*287*
24-158657	BE5-F865	360
24-158756	BE5-F875	689
24-158756	BE5-F875	691
24-158756	BE5-F875	746
24-158756	BE5-F875	747
24-158879	BE5-F887	11
24-164429	BE3-G442	361
24-165464	BE5-G546	484
24-165686	BE5-G568	484
24-166218	BE3-G621	327
24-166218	BE3-G621	329
24-166522	BE3-G652	327
24-166522	BE3-G652	329
24-166539	BE3-G653	327
24-166539	BE3-G653	329
24-166607	BE5-G660	359
24-166621	BE5-G662	359
24-166652	BE5-G665	358
24-166874	BE3-G687	350
24-166898	BE3-G689	350
24-166980	BE5-G698	358
24-166980	BE5-G698	360
24-166997	BE5-G699	361
24-167659	BE5-G765	359
24-167666	BE5-G766	359
24-168014	BE5-G801	146
24-168014	BE5-G801	436
24-168014	BE5-G801	437
24-168014	BE5-G801	632
24-168014	BE5-G801	633
24-168045	BE5-G804	146
24-168045	BE5-G804	436
24-168045	BE5-G804	437
24-168045	BE5-G804	632
24-168045	BE5-G804	633
24-168731	BE5-G873	178
24-168731	BE5-G873	211
24-168731	BE5-G873	212
24-168731	BE5-G873	494
24-168748	BE5-G874	178
24-168748	BE5-G874	211
24-168748	BE5-G874	212
24-168748	BE5-G874	494
24-168748	BE5-G874	495
24-169608	BE3-G960	361
24-169608	BE3-G960	362
24-169608	BE3-G960	363
24-170659	BE3-H065	139
24-170680	BE3-H068	139
24-170826	BE3-H082	328
24-170826	BE3-H082	329
24-171014	BE5-H101	350
24-171014	BE5-H101	351
24-171311	BE5-H131	135
24-171311	BE5-H131	143
24-171472	BE5-H147	288
24-171687	BE3-H168	156
24-171687	BE3-H168	161
24-171687	BE3-H168	262
24-171687	BE3-H168	263
24-171687	BE3-H168	425
24-171687	BE3-H168	470
24-171687	BE3-H168	619
24-171687	BE3-H168	620
24-171687	BE3-H168	649
24-171717	BE3-H171	156
24-171717	BE3-H171	161
24-171717	BE3-H171	262
24-171717	BE3-H171	263
24-171717	BE3-H171	425
24-171717	BE3-H171	470
24-171717	BE3-H171	619
24-171717	BE3-H171	620
24-171717	BE3-H171	649
24-172936	BE3-H293	18
24-172936	BE3-H293	22
24-172936	BE3-H293	24
24-172936	BE3-H293	539
24-172936	BE3-H293	541
24-172936	BE3-H293	555
24-172936	BE3-H293	560
24-172936	BE3-H293	568
24-172936	BE3-H293	570
24-172936	BE3-H293	573
24-172936	BE3-H293	574
24-172936	BE3-H293	685
24-172936	BE3-H293	688
24-172936	BE3-H293	692
24-172936	BE3-H293	693
24-172936	BE3-H293	696
24-172936	BE3-H293	698
24-172936	BE3-H293	716
24-172936	BE3-H293	718
24-172936	BE3-H293	719
24-172936	BE3-H293	720
24-172936	BE3-H293	731
24-172936	BE3-H293	732
24-172936	BE3-H293	734
24-172936	BE3-H293	746
24-172981	BE3-H298	361
24-172981	BE3-H298	362
24-173032	BE5-H303	600
24-173049	BE5-H304	600
24-176002	BE3-H600	169
24-176002	BE3-H600	172
24-176255	BE5-H625	127
24-176255	BE5-H625	143
24-176422	BE5-H642	508
24-176880	BE3-H688	169
24-178006	BE3-H800	18
24-178006	BE3-H800	22
24-178006	BE3-H800	24
24-178006	BE3-H800	539
24-178006	BE3-H800	541
24-178006	BE3-H800	555
24-178006	BE3-H800	560
24-178006	BE3-H800	568
24-178006	BE3-H800	570
24-178006	BE3-H800	573
24-178006	BE3-H800	574
24-178006	BE3-H800	685
24-178006	BE3-H800	688
24-178006	BE3-H800	692
24-178006	BE3-H800	693
24-178006	BE3-H800	697
24-178006	BE3-H800	698
24-178006	BE3-H800	716
24-178006	BE3-H800	718
24-178006	BE3-H800	719
24-178006	BE3-H800	720
24-178006	BE3-H800	731
24-178006	BE3-H800	734
24-178006	BE3-H800	746
24-178488	BE5-H848	127
24-178488	BE5-H848	129
24-178488	BE5-H848	131
24-178488	BE5-H848	143
24-178495	BE5-H849	127
24-178495	BE5-H849	129
24-178495	BE5-H849	131
24-178495	BE5-H849	143
24-178501	BE5-H850	128
24-178501	BE5-H850	129
24-178501	BE5-H850	131
24-178501	BE5-H850	143
24-178518	BE5-H851	128
24-178518	BE5-H851	129
24-178518	BE5-H851	131
24-178518	BE5-H851	143
24-178525	BE5-H852	128
24-178617	BE5-H861	127
24-178617	BE5-H861	129
24-181464	B36-0370	87
24-181464	B36-0370	281
24-181464	B36-0370	372
24-181464	B36-0370	532
24-181471	B36-0380	87
24-181471	B36-0380	281
24-181471	B36-0380	372
24-181471	B36-0380	532
24-181488	B46-0040	698
24-181488	B46-0040	699
24-181495	B46-0137	69
24-181495	B46-0137	671
24-181495	B46-0137	720
24-181495	B46-0137	721
24-181495	B46-0137	722
24-181501	B46-0387	536
24-181501	B46-0387	537
24-181846	*BE5-63207*	*535*
24-181853	BE5-63310	69
24-184724	*B46-1495*	*252*
24-184724	*B46-1495*	*296*
24-184724	*B46-1495*	*372*
24-184731	*B46-1497*	*252*
24-184731	*B46-1497*	*296*
24-184748	B46-1496	252
24-184748	B46-1496	296
24-184748	B46-1496	372
24-184755	B46-1498	252
24-184755	B46-1498	296
24-185233	BE5-2617	186
24-185240	BE5-2618	186
24-185967	BE5-B625	405
24-186162	BE5-D934	153
24-186179	BE5-D935	153
24-186797	BE5-D721	286
24-186803	BE5-D722	286
24-187541	*BE5-H150*	*598*
24-187558	*BE5-H151*	*598*
24-188050	BE3-H785	357
24-188111	BE3-H786	321
24-188111	BE3-H786	323
24-188111	BE3-H786	325
24-188654		225
24-188654		298
24-191128		350
24-191371		288
24-193221		394
24-193238		394
24-193245		394
24-193276		652
24-193276		654
24-193276		655
24-193382		580
24-193399		580
24-193580		127
24-193597		127
24-193672	BE5-H325	278
24-193702		278
24-194112		333
24-194112		349
24-194129		333
24-194129		349
24-194136		350
24-195065		10
24-195096		10
24-195294		500
24-195294		501
24-195409		377
24-195416		377
24-195690		664
24-195706		664
24-196390		278
24-196499		*598*
24-196529		232
24-196529		250
24-196529		251
24-196529		304
24-196529		313
24-196529		650
24-196529		651
24-196529		652
24-196529		664
24-196550		232
24-196550		250
24-196550		251
24-196550		304
24-196550		313
24-196550		650
24-196550		651
24-196550		652
24-196550		664
24-196901		351
24-196918		361
24-196925		356
24-197069		510
24-197069		733
24-197076		510
24-197076		733
24-197083		510
24-197083		733
24-197205		135
24-197236		333
24-197243		334
24-197656		*405*
24-197953		*177*
24-202664	*B46-1506*	*253*
24-202961		131
24-202992		131
24-203012	BE5-D242	283
24-203029	BE5-D243	283
24-214230		742
24-215220		303
24-215220		312
24-215237		303
24-215237		312
24-217552		356
24-217859		90
24-217859		117
24-217873		90
24-217873		117
24-218245		357
24-218474		506
24-218474		507
24-218474		509
24-219952		506
24-220118		316
24-221726	*BE5-2398*	*208*
24-221726	*BE5-2398*	*253*
24-222143		582
24-222181		665
24-222198		665
24-223706		*524*
24-224000		252
24-224000		253
24-224024	*BE5-2738*	*671*
24-224024	*BE5-2738*	*675*
24-224024	*BE5-2738*	*677*
24-224024	*BE5-2738*	*696*
24-224024	*BE5-2738*	*737*
24-577403	*B46-57740*	*208*
24-577410	*B36-57741*	*208*
24-577700	B46-57770	208
24-591522	B46-59152	426
24-591522	B46-59152	452
24-593762	*BE5-59376*	*508*
24-595452	BE5-59545	498
24-599955	*BE5-59995*	*496*
24-599955	*BE5-59995*	*497*
24-599962	*BE5-59996*	*496*
24-599962	*BE5-59996*	*497*
24-604277	BE5-60427	139
24-607896	*BE3-60789*	*542*
24-607896	*BE3-60789*	*700*
24-618106	BE3-61810	747
24-618113	BE3-61811	747
24-627009	*BE5-62700*	*675*
24-627009	*BE5-62700*	*677*
24-627009	*BE5-62700*	*696*
24-627726	BE5-62772	408
24-627726	BE5-62772	447
24-629485	BE3-62948	674
24-629485	BE3-62948	676
24-629485	BE3-62948	696
24-630016	*BE5-63001*	*134*
24-630085	BE3-63008	407
24-631129	BE5-63112	426
24-631129	BE5-63112	452
24-631136	BE3-63113	426
24-631136	BE3-63113	452
24-632133	BE5-63213	139
24-632140	BE5-63214	139
24-632140	BE5-63214	140
24-632157	BE5-63215	77
24-632164	BE5-63216	77
24-632171	BE3-63217	435
24-632171	BE3-63217	437
24-632171	BE3-63217	438
24-632188	BE3-63218	737
24-632539	*BE5-63253*	*77*
24-632560	*BE5-63256*	*77*
24-632614	*BE5-63261*	*77*
24-632621	*BE5-63262*	*77*
24-632683	BE3-63268	435
24-632690	BE5-63269	435
24-632799	*BE5-63279*	*740*
24-632805	*BE5-63280*	*740*
24-633116	*BE5-63311*	*69*
24-633369	BE5-63336	281
24-633369	BE5-63336	438
24-633369	BE5-63336	439
24-633376	BE5-63337	281
24-633376	BE5-63337	438
24-633376	BE5-63337	439
24-634038	*BE3-63403*	*186*
24-634045	*BE3-63404*	*186*
24-634649	*BE5-63464*	*740*
25-177909	*BR5-H790*	*598*
26-118260	BA5-B826	503
26-118260	BA5-B826	505
26-118260	BA5-B826	506
26-118284	BA5-B828	503
26-118284	BA5-B828	505
26-118284	BA5-B828	506
26-147543	VA7-E754	503
26-147543	VA7-E754	505
26-147543	VA7-E754	506
26-181905	BM5-H364	102
26-181905	BM5-H364	105
26-181905	BM5-H364	106
26-181905	BM5-H364	108
26-181905	BM5-H364	141
26-181936	BM5-H618	88
26-181936	BM5-H618	89
26-181936	BM5-H618	90
26-181936	BM5-H618	110
26-181936	BM5-H618	112
26-181936	BM5-H618	114
26-181936	BM5-H618	116
26-181936	BM5-H618	142
26-181943	*0028860*	*14*
26-181950	*0028861*	*14*
26-181967	*0030091*	*502*
26-181974	*0030664*	*502*
26-181981	*0035650*	*504*
26-181998	*0035751*	*504*
26-182001	*0036439*	*155*
26-182018	*0036440*	*155*
26-182025	*0037419*	*14*
26-182032	*0037420*	*14*
26-203034	BA5-D244	283
26-203041	BA5-D245	283
26-203058	BA5-E030	283
26-203065	BA5-E031	283
26-203072	BA5-G471	283
26-203089	BA5-G472	283
26-218496		506
26-218496		509
26-219974		506
26-219998		506
26-220048		349
26-220055		349
26-224572		110
26-224572		114
26-224572		116
26-602059	*BM5-60205*	*103*
26-602059	*BM5-60205*	*106*
26-602059	*BM5-60205*	*107*
26-602059	*BM5-60205*	*108*
26-602059	*BM5-60205*	*138*
26-624648	*BM5-62464*	*502*
26-630113	*VM3-63011*	*502*
26-633510	*BM5-63351*	*111*
26-633510	*BM5-63351*	*113*
26-633510	*BM5-63351*	*115*
26-633510	*BM5-63351*	*116*
27-029732	*BR5-2973*	*502*
27-105993	BF3-A599	349
27-124260	*BR5-C426*	*502*
27-219935		358
28-214212	*P30-57939*	*601*
29-196500		232
29-196517		232
29-196531		232
29-196548		232
31-181884	VM3-H362	102
31-181884	VM3-H362	105
31-181884	VM3-H362	106
31-181884	VM3-H362	108
31-181884	VM3-H362	141
31-181891	VM3-H363	102
31-181891	VM3-H363	105
31-181891	VM3-H363	106
31-181891	VM3-H363	108
31-181891	VM3-H363	141
31-181914	VM3-H616	88
31-181914	VM3-H616	89
31-181914	VM3-H616	90
31-181914	VM3-H616	110
31-181914	VM3-H616	112
31-181914	VM3-H616	114
31-181914	VM3-H616	116
31-181914	VM3-H616	142
31-181921	VM3-H617	88
31-181921	VM3-H617	89
31-181921	VM3-H617	90
31-181921	VM3-H617	110
31-181921	VM3-H617	112
31-181921	VM3-H617	114
31-181921	VM3-H617	116
31-181921	VM3-H617	142
31-224550		110
31-224550		114
31-224550		116
31-224567		110

New order number – Old order number

New	Old	Page
31-224567		114
31-224567		116
31-633499	VM3-63349	103
31-633499	VM3-63349	106
31-633499	VM3-63349	107
31-633499	VM3-63349	108
31-633499	VM3-63349	111
31-633499	VM3-63349	113
31-633499	VM3-63349	115
31-633499	VM3-63349	116
31-633499	VM3-63349	138
31-633505	VM3-63350	103
31-633505	VM3-63350	106
31-633505	VM3-63350	107
31-633505	VM3-63350	108
31-633505	VM3-63350	111
31-633505	VM3-63350	113
31-633505	VM3-63350	115
31-633505	VM3-63350	116
31-633505	VM3-63350	138
32-145519	VR3-E551	502
32-145526	BR5-E552	504
32-616965	BR5-61696	502
33-023519	BE5-2351	599
33-067230	BE5-6723	656
33-067230	BE5-6723	657
33-067230	BE5-6723	658
33-124254	VR3-C425	504
33-158723	BE5-F872	689
33-158723	BE5-F872	691
33-158723	BE5-F872	746
33-158723	BE5-F872	747
33-185859	BE5-A702	186
33-187174	BE5-E703	598
33-616957	VR3-61695	502
34-000144	P30-0014	701
34-000144	P30-0014	702
34-000175	P30-0017	69
34-000175	P30-0017	671
34-000175	P30-0017	720
34-000175	P30-0017	721
34-000175	P30-0017	722
34-000236	P30-0023	139
34-000243	P36-0024	118
34-000243	P36-0024	119
34-000243	P36-0024	140
34-000243	P36-0024	141
34-000250	P30-0025	139
34-000311	P36-0031	737
34-000403	P30-0040	507
34-000403	P30-0040	508
34-000403	P30-0040	699
34-000427	P30-0042	87
34-000533	P30-0053	208
34-000533	P30-0053	209
34-000540	P30-0054	208
34-000540	P30-0054	209
34-000557	P30-0055	209
34-000564	P30-0056	209
34-000588	P30-0058	208
34-000670	P36-0067	378
34-000748	P30-0074	590
34-000779	P30-0077	590
34-000885	P30-0088	378
34-000885	P30-0088	381
34-000885	P30-0088	382
34-000939	P36-0093	291
34-000984	P30-0098	591
34-001011	P30-0101	214
34-001028	P30-0102	674
34-001028	P30-0102	696
34-001042	P30-0104	507
34-001042	P30-0104	508
34-001103	P36-0110	213
34-001127	P36-0112	497
34-001127	P36-0112	498
34-001127	P36-0112	507
34-001134	P36-0113	497
34-001134	P36-0113	498
34-001134	P36-0113	499
34-001141	P36-0114	497
34-001158	P36-0115	497
34-001158	P36-0115	498
34-001158	P36-0115	499
34-001165	P36-0116	497
34-001165	P36-0116	498
34-001165	P36-0116	499
34-001219	P30-0121	91
34-001363	P36-0136	92
34-001363	P36-0136	93
34-001363	P36-0136	94
34-001363	P36-0136	136
34-001370	P30-0137	668
34-001370	P30-0137	673
34-001370	P30-0137	695
34-001370	P30-0137	730
34-001370	P30-0137	731
34-001417	P36-0141	427
34-001417	P36-0141	453
34-001417	P36-0141	622
34-001417	P36-0141	623
34-001417	P36-0141	637
34-001417	P36-0141	648
34-001424	P36-0142	181
34-001424	P36-0142	182
34-001424	P36-0142	183
34-001424	P36-0142	184
34-001424	P36-0142	254
34-001424	P36-0142	439
34-001424	P36-0142	440
34-001424	P36-0142	441
34-001424	P36-0142	442
34-001424	P36-0142	444
34-001424	P36-0142	445
34-001424	P36-0142	446
34-001424	P36-0142	604
34-001424	P36-0142	605
34-001424	P36-0142	606
34-001424	P36-0142	608
34-001424	P36-0142	609
34-001462	P36-0146	181
34-001462	P36-0146	182
34-001462	P36-0146	255
34-001462	P36-0146	440
34-001462	P36-0146	441
34-001462	P36-0146	443
34-001462	P36-0146	444
34-001462	P36-0146	446
34-001462	P36-0146	604
34-001462	P36-0146	605
34-001462	P36-0146	607
34-001592	P36-0159	458
34-001592	P36-0159	459
34-001592	P36-0159	625
34-002230	P36-0223	91
34-002292	P36-0229	130
34-002315	P36-0231	131
34-002339	P36-0233	119
34-002339	P36-0233	120
34-002339	P36-0233	130
34-002421	P36-0242	119
34-002421	P36-0242	130
34-002513	P36-0251	92
34-002513	P36-0251	93
34-002629	P36-0262	390
34-002636	P30-0263	394
34-002643	P30-0264	390
34-002681	P30-0268	394
34-002926	P36-0292	659
34-002926	P36-0292	660
34-002926	P36-0292	662
34-002926	P36-0292	663
34-003114	P36-0311	183
34-003114	P36-0311	255
34-003114	P36-0311	439
34-003114	P36-0311	441
34-003114	P36-0311	443
34-003114	P36-0311	444
34-003114	P36-0311	445
34-003114	P36-0311	446
34-003114	P36-0311	604
34-003114	P36-0311	605
34-003114	P36-0311	607
34-003114	P36-0311	608
34-003114	P36-0311	609
34-003268	P36-0326	118
34-003268	P36-0326	119
34-003268	P36-0326	140
34-003268	P36-0326	141
34-003343	P30-0334	92
34-003343	P30-0334	93
34-003343	P30-0334	94
34-003350	P36-0335	12
34-003350	P36-0335	13
34-003350	P36-0335	92
34-003350	P36-0335	93
34-003350	P36-0335	94
34-003497	P36-0349	600
34-003510	P30-0351	163
34-003510	P30-0351	174
34-003510	P30-0351	472
34-003510	P30-0351	473
34-003527	P30-0352	589
34-003534	P36-0353	132
34-003671	P36-0367	457
34-003671	P36-0367	458
34-003671	P36-0367	459
34-003671	P36-0367	624
34-003671	P36-0367	625
34-003688	P36-0368	132
34-003695	P36-0369	53
34-003695	P36-0369	54
34-003695	P36-0369	64
34-003695	P36-0369	79
34-003695	P36-0369	80
34-003695	P36-0369	81
34-003695	P36-0369	82
34-003695	P36-0369	83
34-003695	P36-0369	84
34-003701	P36-0370	53
34-003701	P36-0370	54
34-003701	P36-0370	64
34-003701	P36-0370	77
34-003701	P36-0370	78
34-003701	P36-0370	79
34-003701	P36-0370	80
34-003701	P36-0370	81
34-003701	P36-0370	82
34-003701	P36-0370	83
34-003701	P36-0370	84
34-003725	P36-0372	262
34-003725	P36-0372	426
34-003725	P36-0372	622
34-030011	P30-3001	69
34-030011	P30-3001	671
34-030011	P30-3001	721
34-030011	P30-3001	722
34-030035	P36-3003	255
34-030035	P36-3003	410
34-030035	P36-3003	411
34-030035	P36-3003	412
34-030035	P36-3003	413
34-030035	P36-3003	414
34-030035	P36-3003	609
34-030035	P36-3003	610
34-030035	P36-3003	611
34-030035	P36-3003	620
34-030059	P30-3005	70
34-030059	P30-3005	71
34-030059	P30-3005	72
34-030059	P30-3005	73
34-030059	P30-3005	74
34-030059	P30-3005	75
34-030059	P30-3005	76
34-030059	P30-3005	703
34-030059	P30-3005	704
34-030059	P30-3005	729
34-030066	P30-3006	70
34-030066	P30-3006	71
34-030066	P30-3006	72
34-030066	P30-3006	73
34-030066	P30-3006	74
34-030066	P30-3006	75
34-030066	P30-3006	76
34-030066	P30-3006	77
34-030097	P30-3009	593
34-030103	P36-3010	394
34-030110	P30-3011	281
34-030110	P30-3011	399
34-030165	P36-3016	70
34-030165	P36-3016	71
34-030165	P36-3016	76
34-030172	P36-3017	70
34-030172	P36-3017	71
34-030172	P36-3017	72
34-030172	P36-3017	73
34-030172	P36-3017	76
34-030189	P36-3018	121
34-030189	P36-3018	122
34-030189	P36-3018	132
34-030196	P36-3019	121
34-030196	P36-3019	122
34-030196	P36-3019	123
34-030196	P36-3019	124
34-030202	P36-3020	121
34-030202	P36-3020	122
34-030202	P36-3020	123
34-030219	P36-3021	121
34-030226	P36-3022	121
34-030226	P36-3022	123
34-030233	P36-3023	121
34-030233	P36-3023	123
34-030585	P36-3058	72
34-030585	P36-3058	73
34-030585	P36-3058	77
34-030592	P30-3059	163
34-030592	P30-3059	174
34-030592	P30-3059	472
34-030592	P30-3059	473
34-030608	P30-3060	163
34-030608	P30-3060	174
34-030608	P30-3060	472
34-030608	P30-3060	473
34-030615	P30-3061	600
34-030622	P30-3062	600
34-030677	P36-3067	659
34-030677	P36-3067	660
34-030677	P36-3067	661
34-030684	P36-3068	290
34-030684	P36-3068	291
34-030721	P36-3072	181
34-030721	P36-3072	182
34-030721	P36-3072	183
34-030721	P36-3072	255
34-030721	P36-3072	440
34-030721	P36-3072	443
34-030721	P36-3072	444
34-030721	P36-3072	446
34-030721	P36-3072	604
34-030721	P36-3072	605
34-030721	P36-3072	607
34-030806	P36-3080	656
34-030806	P36-3080	657
34-030806	P36-3080	658
34-030837	PE3-3083	656
34-030837	PE3-3083	657
34-030837	PE3-3083	658
34-030868	PE3-3086	73
34-030868	PE3-3086	74
34-030868	PE3-3086	75
34-030936	PE3-3093	537
34-031049	PE3-3104	532
34-031056	PE3-3105	532
34-031483	PE3-3148	132
34-031520	PE3-3152	656
34-031520	PE3-3152	657
34-031520	PE3-3152	658
34-046012	VR3-4601	502
34-046296	PE3-04629	93
34-046296	PE3-04629	94
34-050019	R36-5001	497
34-050019	R36-5001	498
34-050019	R36-5001	499
34-050149	R30-5014	312
34-050194	R30-5019	601
34-050217	R30-5021	593
34-050224	R36-5022	389
34-050231	R36-5023	390
34-050248	R30-5024	279
34-050248	R30-5024	280
34-050255	R36-5025	280
34-050262	R30-5026	312
34-050279	R36-5027	312
34-050316	R30-5031	600
34-050361	R30-5036	279
34-050453	RE2-5045	394
34-050460	RE3-5046	397
34-050484	RE2-5048	601
34-050491	RE3-5049	497
34-050491	RE3-5049	498
34-050491	RE3-5049	499
34-050507	RE3-5050	497
34-050507	RE3-5050	498
34-050507	RE3-5050	499
34-050514	RE2-5051	277
34-050521	RE2-5052	277
34-050538	RE2-5053	279
34-050545	RE2-5054	279
34-100608	PE3-A060	132
34-101803	PE3-A180	289
34-110096	PE3-B009	13
34-110096	PE3-B009	134
34-181515	P30-0034	699
34-181522	P30-0128	92
34-181522	P30-0128	93
34-181522	P30-0128	94
34-181539	P36-0081	656
34-181539	P36-0081	657
34-181539	P36-0081	658
34-181546	P36-0243	120
34-181553	P36-0258	132
34-181560	P36-0361	132
34-181577	P36-0365	255
34-181577	P36-0365	410
34-181577	P36-0365	411
34-181577	P36-0365	412
34-181577	P36-0365	413
34-181577	P36-0365	414
34-181577	P36-0365	609
34-181577	P36-0365	610
34-181577	P36-0365	611
34-181577	P36-0365	620
34-181584	P36-0366	262
34-181584	P36-0366	426
34-181584	P36-0366	622
34-188620	RE3-H772	498
34-188620	RE3-H772	499
34-465578	P30-46557	747
34-465585	P30-46558	747
34-594520	P30-59452	139
34-610848	VE3-61084	502
34-612200	RE3-61220	497
34-612200	RE3-61220	498
34-612200	RE3-61220	499
34-632192	PE3-63219	139
34-632192	PE3-63219	140
35-000396	V36-0039	215
35-000945	V36-0094	281
35-000945	V36-0094	448
35-000945	V36-0094	449
35-000945	V36-0094	453
35-000945	V36-0094	623
35-000945	V36-0094	637
35-001065	V36-0106	675
35-001270	V36-0127	497
35-001270	V36-0127	498
35-001270	V36-0127	499
35-001287	V36-0128	497
35-001287	V36-0128	498
35-001287	V36-0128	499
35-002147	V36-0214	670
35-003663	V36-0366	674
35-003663	V36-0366	676
35-003663	V36-0366	696
35-003717	V36-0371	281
35-003717	V36-0371	448
35-003717	V36-0371	449
35-003717	V36-0371	453
35-003717	V36-0371	623
35-003717	V36-0371	637
35-003779	V36-0377	223
35-003878	V36-0387	670
35-003885	V36-0388	497
35-003885	V36-0388	498
35-003885	V36-0388	499
35-003892	V36-0389	497
35-003892	V36-0389	498
35-003892	V36-0389	499
35-003908	V36-0390	497
35-003908	V36-0390	498
35-003908	V36-0390	499
35-003915	V36-0391	497
35-003915	V36-0391	498
35-003915	V36-0391	499
35-003922	V36-0392	497
35-003922	V36-0392	498
35-003922	V36-0392	499
35-003939	V36-0393	497
35-003939	V36-0393	498
35-003939	V36-0393	499
35-003984	V36-0398	216
35-003984	V36-0398	217
35-003984	V36-0398	218
35-003984	V36-0398	219
35-003984	V36-0398	220
35-003984	V36-0398	241
35-003991	V36-0399	254
35-003991	V36-0399	583
35-004004	V36-0400	526
35-004004	V36-0400	527
35-004004	V36-0400	528
35-004004	V36-0400	529
35-005452	V36-0545	473
35-005452	V36-0545	474
35-005452	V36-0545	485
35-005469	V36-0546	473
35-005469	V36-0546	474
35-005469	V36-0546	485
35-005476	V36-0547	474
35-005476	V36-0547	485
35-005483	V36-0548	474
35-005483	V36-0548	485
35-005520	V36-0552	485
35-005520	V36-0552	486
35-040163	V36-4016	526
35-040163	V36-4016	527
35-040163	V36-4016	528
35-040163	V36-4016	529
35-040194	V36-4019	600
35-040200	V36-4020	600
35-040286	V36-4028	217
35-040286	V36-4028	218
35-040286	V36-4028	219
35-040286	V36-4028	220
35-040286	V36-4028	241
35-040408	V36-4040	243
35-040408	V36-4040	244
35-040408	V36-4040	245
35-040415	V36-4041	243
35-040415	V36-4041	244
35-040415	V36-4041	245
35-040460	V36-4046	511
35-040460	V36-4046	512
35-040477	V36-4047	512
35-040590	V36-4059	145
35-040590	V36-4059	146
35-040590	V36-4059	147
35-040590	V36-4059	153
35-040590	V36-4059	154
35-040590	V36-4059	260
35-040590	V36-4059	261
35-040590	V36-4059	428
35-040590	V36-4059	429
35-040590	V36-4059	430
35-040590	V36-4059	431
35-040590	V36-4059	455
35-040590	V36-4059	456
35-040590	V36-4059	627
35-040590	V36-4059	628
35-040590	V36-4059	634
35-040590	V36-4059	635
35-040590	V36-4059	636
35-040590	V36-4059	639
35-040606	V32-4060	523
35-041283	V36-4128	222
35-041283	V36-4128	225
35-041313	V36-4131	480
35-041313	V36-4131	481
35-041320	V36-4132	480
35-041320	V36-4132	481

New order number – Old order number

New	Old	Page
35-041337	V36-4133	480
35-041337	V36-4133	481
35-041344	V36-4134	480
35-041344	V36-4134	481
35-041382	*V36-4138*	*252*
35-041696	VE3-4169	133
35-041702	VE3-4170	133
35-041757	*VE3-4175*	*154*
35-041757	*VE3-4175*	*260*
35-041757	*VE3-4175*	*261*
35-041757	*VE3-4175*	*428*
35-041757	*VE3-4175*	*429*
35-041757	*VE3-4175*	*431*
35-041757	*VE3-4175*	*456*
35-041757	*VE3-4175*	*627*
35-041757	*VE3-4175*	*634*
35-041757	*VE3-4175*	*635*
35-041757	*VE3-4175*	*639*
35-042013	*VE3-4201*	*223*
35-042136	VE3-4213	154
35-042136	VE3-4213	261
35-042136	VE3-4213	429
35-042136	VE3-4213	431
35-042136	VE3-4213	456
35-042136	VE3-4213	627
35-042136	VE3-4213	634
35-042136	VE3-4213	635
35-042136	VE3-4213	639
35-042372	VE3-4237	95
35-042372	VE3-4237	98
35-042372	VE3-4237	100
35-042389	VE3-4238	95
35-042389	VE3-4238	98
35-042389	VE3-4238	100
35-042747	VE3-4274	512
35-043126	*VE3-4312*	*11*
35-043126	*VE3-4312*	*12*
35-043256	VE3-4325	512
35-043713	VE3-4371	534
35-043881	VE3-4388	534
35-043881	VE3-4388	535
35-043898	VE3-4389	241
35-043911	VE3-4391	543
35-043911	VE3-4391	544
35-043911	VE3-4391	545
35-043911	VE3-4391	546
35-043911	VE3-4391	549
35-043911	VE3-4391	550
35-043911	VE3-4391	670
35-043911	VE3-4391	674
35-043911	VE3-4391	676
35-043911	VE3-4391	678
35-043911	VE3-4391	679
35-043911	VE3-4391	684
35-043911	VE3-4391	696
35-043911	VE3-4391	725
35-043911	VE3-4391	736
35-043928	VE3-4392	544
35-043928	VE3-4392	545
35-043928	VE3-4392	546
35-043928	VE3-4392	549
35-043928	VE3-4392	550
35-043928	VE3-4392	671
35-043928	VE3-4392	676
35-043928	VE3-4392	679
35-043928	VE3-4392	684
35-043928	VE3-4392	736
35-043935	VE3-4393	137
35-043942	VE3-4394	137
35-043959	VE3-4395	543
35-043959	VE3-4395	549
35-043959	VE3-4395	558
35-043959	VE3-4395	676
35-043959	VE3-4395	678
35-043959	VE3-4395	736
35-043966	VE3-4396	543
35-043966	VE3-4396	549
35-043966	VE3-4396	558
35-043966	VE3-4396	676
35-043966	VE3-4396	678
35-043966	VE3-4396	736
35-044000	VE3-4400	95
35-044000	VE3-4400	97
35-044000	VE3-4400	98
35-044000	VE3-4400	100
35-044000	VE3-4400	101
35-044017	VE3-4401	95
35-044017	VE3-4401	97
35-044017	VE3-4401	98
35-044017	VE3-4401	100
35-044017	VE3-4401	101
35-044024	VE3-4402	13
35-044024	VE3-4402	96
35-044024	VE3-4402	97
35-044024	VE3-4402	98
35-044024	VE3-4402	100
35-044024	VE3-4402	101
35-044024	VE3-4402	137
35-044031	VE3-4403	13
35-044031	VE3-4403	96
35-044031	VE3-4403	97
35-044031	VE3-4403	98
35-044031	VE3-4403	100
35-044031	VE3-4403	101
35-044031	VE3-4403	137
35-044048	VE3-4404	137
35-044055	VE3-4405	137
35-044062	*VE3-4406*	*671*
35-044062	*VE3-4406*	*675*
35-044062	*VE3-4406*	*677*
35-044062	*VE3-4406*	*696*
35-044062	*VE3-4406*	*737*
35-044079	VE3-4407	16
35-044079	VE3-4407	553
35-044079	VE3-4407	559
35-044079	VE3-4407	566
35-044079	VE3-4407	567
35-044079	VE3-4407	665
35-044079	VE3-4407	667
35-044079	VE3-4407	680
35-044079	VE3-4407	682
35-044079	VE3-4407	700
35-044079	VE3-4407	701
35-044079	VE3-4407	747
35-044086	VE3-4408	16
35-044086	VE3-4408	553
35-044086	VE3-4408	559
35-044086	VE3-4408	566
35-044086	VE3-4408	567
35-044086	VE3-4408	666
35-044086	VE3-4408	667
35-044086	VE3-4408	680
35-044086	VE3-4408	683
35-044086	VE3-4408	700
35-044086	VE3-4408	701
35-044086	VE3-4408	747
35-044253	VE3-4425	450
35-044253	VE3-4425	451
35-044253	VE3-4425	636
35-044260	VE3-4426	450
35-044260	VE3-4426	451
35-044260	VE3-4426	636
35-044338	VE3-4433	148
35-044338	VE3-4433	256
35-044338	VE3-4433	257
35-044338	VE3-4433	258
35-044338	VE3-4433	260
35-044338	VE3-4433	415
35-044338	VE3-4433	416
35-044338	VE3-4433	417
35-044338	VE3-4433	418
35-044338	VE3-4433	419
35-044338	VE3-4433	612
35-044338	VE3-4433	613
35-044338	VE3-4433	615
35-044338	VE3-4433	616
35-044338	VE3-4433	621
35-044345	VE3-4434	148
35-044345	VE3-4434	149
35-044345	VE3-4434	256
35-044345	VE3-4434	257
35-044345	VE3-4434	258
35-044345	VE3-4434	260
35-044345	VE3-4434	415
35-044345	VE3-4434	416
35-044345	VE3-4434	417
35-044345	VE3-4434	418
35-044345	VE3-4434	419
35-044345	VE3-4434	612
35-044345	VE3-4434	614
35-044345	VE3-4434	615
35-044345	VE3-4434	616
35-044345	VE3-4434	621
35-044468	VE3-04446	244
35-045984	VE3-4598	161
35-045984	VE3-4598	263
35-045984	VE3-4598	469
35-045984	VE3-4598	648
35-045991	VE3-4599	161
35-045991	VE3-4599	263
35-045991	VE3-4599	469
35-045991	VE3-4599	649
35-046196	VE3-4619	542
35-046196	VE3-4619	700
35-046202	VE3-4620	542
35-046202	VE3-4620	700
35-046370	VE3-4637	16
35-046370	VE3-4637	66
35-046370	VE3-4637	67
35-046370	VE3-4637	553
35-046370	VE3-4637	559
35-046370	VE3-4637	566
35-046370	VE3-4637	567
35-046370	VE3-4637	665
35-046370	VE3-4637	667
35-046370	VE3-4637	680
35-046370	VE3-4637	682
35-046387	VE3-4638	16
35-046387	VE3-4638	66
35-046387	VE3-4638	67
35-046387	VE3-4638	553
35-046387	VE3-4638	559
35-046387	VE3-4638	566
35-046387	VE3-4638	567
35-046387	VE3-4638	666
35-046387	VE3-4638	667
35-046387	VE3-4638	680
35-046387	VE3-4638	683
35-046462	VE3-4646	175
35-046462	VE3-4646	176
35-046462	VE3-4646	475
35-046462	VE3-4646	476
35-046479	VE3-4647	175
35-046479	VE3-4647	176
35-046479	VE3-4647	475
35-046479	VE3-4647	476
35-046509	VE3-4650	199
35-046547	VE3-4654	199
35-046929	VE3-4692	500
35-046929	VE3-4692	501
35-046936	VE3-4693	500
35-046936	VE3-4693	501
35-047209	VE3-4720	5
35-047209	VE3-4720	6
35-047209	VE3-4720	10
35-047216	VE3-4721	5
35-047216	VE3-4721	6
35-047216	VE3-4721	10
35-050162	VE3-5016	175
35-050162	VE3-5016	176
35-050162	VE3-5016	475
35-050162	VE3-5016	476
35-050162	VE3-5016	477
35-050179	VE3-5017	175
35-050179	VE3-5017	176
35-050179	VE3-5017	475
35-050179	VE3-5017	476
35-050179	VE3-5017	477
35-051145	VE3-5114	512
35-051145	VE3-5114	513
35-051152	VE3-5115	513
35-051169	VE3-5116	513
35-051176	VE3-5117	513
35-051398	VE3-5139	227
35-051398	VE3-5139	228
35-051404	VE3-5140	227
35-051404	VE3-5140	228
35-051411	VE3-5141	227
35-051411	VE3-5141	228
35-051428	VE3-5142	227
35-051428	VE3-5142	228
35-051442	VE3-5144	700
35-051480	VE3-5148	237
35-051480	VE3-5148	238
35-051480	VE3-5148	251
35-051497	VE3-5149	285
35-051503	VE3-5150	285
35-051688	VE3-5168	534
35-051688	VE3-5168	535
35-051695	VE3-5169	534
35-051695	VE3-5169	535
35-052173	VE3-5217	15
35-052173	VE3-5217	546
35-052173	VE3-5217	550
35-052173	VE3-5217	562
35-052173	VE3-5217	563
35-052173	VE3-5217	564
35-052173	VE3-5217	572
35-052173	VE3-5217	726
35-052173	VE3-5217	727
35-052180	VE3-5218	15
35-052180	VE3-5218	546
35-052180	VE3-5218	550
35-052180	VE3-5218	562
35-052180	VE3-5218	563
35-052180	VE3-5218	564
35-052180	VE3-5218	572
35-052180	VE3-5218	726
35-052180	VE3-5218	727
35-052210	VE3-5221	652
35-052210	VE3-5221	654
35-052210	VE3-5221	655
35-052227	VE3-5222	652
35-052227	VE3-5222	654
35-052227	VE3-5222	655
35-052746	VE3-5274	170
35-052746	VE3-5274	171
35-052746	VE3-5274	482
35-052746	VE3-5274	483
35-052746	VE3-5274	484
35-052753	VE3-5275	170
35-052753	VE3-5275	171
35-052753	VE3-5275	482
35-052753	VE3-5275	483
35-052753	VE3-5275	484
35-052777	VE3-5277	499
35-052777	VE3-5277	500
35-052784	VE3-5278	499
35-052784	VE3-5278	500
35-053446	VE3-5344	321
35-053446	VE3-5344	323
35-053446	VE3-5344	324
35-053446	VE3-5344	325
35-053446	VE3-5344	331
35-053446	VE3-5344	332
35-053453	VE3-5345	321
35-053453	VE3-5345	323
35-053453	VE3-5345	324
35-053453	VE3-5345	326
35-053453	VE3-5345	332
35-053453	VE3-5345	333
35-053460	VE3-5346	596
35-053460	VE3-5346	597
35-053460	VE3-5346	598
35-053477	VE3-5347	596
35-053477	VE3-5347	597
35-053477	VE3-5347	598
35-053484	VE3-5348	596
35-053484	VE3-5348	597
35-053484	VE3-5348	598
35-053491	VE3-5349	596
35-053491	VE3-5349	597
35-053491	VE3-5349	598
35-100324	VE3-A032	4
35-100331	VE3-A033	4
35-101680	*VE3-A168*	*579*
35-102502	VE3-A250	147
35-102502	VE3-A250	533
35-102519	VE3-A251	147
35-102519	VE3-A251	533
35-102533	VE3-A253	147
35-102533	VE3-A253	533
35-102533	VE3-A253	534
35-102540	VE3-A254	147
35-102540	VE3-A254	533
35-102540	VE3-A254	534
35-103233	VE3-A323	373
35-103233	VE3-A323	374
35-103240	VE3-A324	373
35-103240	VE3-A324	374
35-103509	VE3-A350	233
35-103509	VE3-A350	538
35-103509	VE3-A350	732
35-103516	VE3-A351	233
35-103516	VE3-A351	538
35-103516	VE3-A351	732
35-103547	VE3-A354	224
35-103547	VE3-A354	298
35-103554	VE3-A355	224
35-103554	VE3-A355	298
35-103578	VE3-A357	224
35-103578	VE3-A357	298
35-103585	VE3-A358	224
35-103585	VE3-A358	298
35-104384	VE3-A438	232
35-104391	VE3-A439	232
35-105855	VE3-A585	95
35-105855	VE3-A585	98
35-105855	VE3-A585	100
35-105862	VE3-A586	95
35-105862	VE3-A586	98
35-105862	VE3-A586	100
35-107354	VE3-A735	277
35-107361	VE3-A736	277
35-107378	VE3-A737	277
35-107385	VE3-A738	277
35-107392	VE3-A739	277
35-107408	VE3-A740	277
35-107422	VE3-A742	136
35-107439	VE3-A743	136
35-107460	VE3-A746	274
35-107477	VE3-A747	274
35-108177	VE3-A817	18
35-108177	VE3-A817	22
35-108177	VE3-A817	24
35-108177	VE3-A817	65
35-108177	VE3-A817	539
35-108177	VE3-A817	541
35-108177	VE3-A817	555
35-108177	VE3-A817	560
35-108177	VE3-A817	568
35-108177	VE3-A817	570
35-108177	VE3-A817	665
35-108177	VE3-A817	672
35-108177	VE3-A817	685
35-108177	VE3-A817	688
35-108177	VE3-A817	692
35-108177	VE3-A817	693
35-108177	VE3-A817	697
35-108177	VE3-A817	698
35-108177	VE3-A817	731
35-108177	VE3-A817	734
35-108191	VE3-A819	560
35-108191	VE3-A819	568
35-108191	VE3-A819	570
35-108191	VE3-A819	665
35-108191	VE3-A819	672
35-108191	VE3-A819	685
35-108191	VE3-A819	688
35-108191	VE3-A819	692
35-108191	VE3-A819	693
35-108191	VE3-A819	697
35-108191	VE3-A819	698
35-108191	VE3-A819	731
35-108191	VE3-A819	734
35-109631	VE3-A963	127
35-109631	VE3-A963	128
35-109631	VE3-A963	142
35-109655	VE3-A965	127
35-109655	VE3-A965	129
35-109655	VE3-A965	130
35-109655	VE3-A965	131
35-109655	VE3-A965	142
35-110552	VE3-B055	509
35-110552	VE3-B055	733
35-110569	VE3-B056	509
35-110569	VE3-B056	733
35-110583	VE3-B058	509
35-110583	VE3-B058	733
35-110590	VE3-B059	509
35-110590	VE3-B059	733
35-110651	VE3-B065	191
35-110651	VE3-B065	455
35-110651	VE3-B065	463
35-110651	VE3-B065	465
35-110651	VE3-B065	468
35-110651	VE3-B065	638
35-110651	VE3-B065	643
35-110651	VE3-B065	645
35-110651	VE3-B065	647
35-110668	VE3-B066	191
35-110668	VE3-B066	455
35-110668	VE3-B066	463
35-110668	VE3-B066	465
35-110668	VE3-B066	468
35-110668	VE3-B066	638
35-110668	VE3-B066	643
35-110668	VE3-B066	645
35-110668	VE3-B066	647
35-110675	VE3-B067	191
35-110675	VE3-B067	455
35-110675	VE3-B067	464
35-110675	VE3-B067	465
35-110675	VE3-B067	468
35-110675	VE3-B067	638
35-110675	VE3-B067	644
35-110675	VE3-B067	645
35-110675	VE3-B067	647
35-110682	VE3-B068	191
35-110682	VE3-B068	455
35-110682	VE3-B068	464
35-110682	VE3-B068	465
35-110682	VE3-B068	468
35-110682	VE3-B068	638
35-110682	VE3-B068	644
35-110682	VE3-B068	645
35-110682	VE3-B068	647
35-110736	VE3-B073	229
35-110736	VE3-B073	230
35-110736	VE3-B073	231
35-110736	VE3-B073	250
35-110736	VE3-B073	251
35-110736	VE3-B073	303
35-110736	VE3-B073	304
35-110736	VE3-B073	312
35-110736	VE3-B073	313
35-110736	VE3-B073	650
35-110736	VE3-B073	651
35-110736	VE3-B073	652
35-110736	VE3-B073	653
35-110736	VE3-B073	664
35-110743	VE3-B074	229
35-110743	VE3-B074	230
35-110743	VE3-B074	231
35-110743	VE3-B074	250
35-110743	VE3-B074	251
35-110743	VE3-B074	303
35-110743	VE3-B074	304
35-110743	VE3-B074	312
35-110743	VE3-B074	313
35-110743	VE3-B074	650
35-110743	VE3-B074	651
35-110743	VE3-B074	652
35-110743	VE3-B074	653
35-110743	VE3-B074	664
35-110767	VE3-B076	229
35-110767	VE3-B076	230
35-110767	VE3-B076	231
35-110767	VE3-B076	250
35-110767	VE3-B076	251
35-110767	VE3-B076	303
35-110767	VE3-B076	304

New order number – Old order number

New	Old	Page
35-110767	VE3-B076	312
35-110767	VE3-B076	313
35-110767	VE3-B076	650
35-110767	VE3-B076	651
35-110767	VE3-B076	652
35-110767	VE3-B076	653
35-110767	VE3-B076	664
35-110774	VE3-B077	229
35-110774	VE3-B077	230
35-110774	VE3-B077	231
35-110774	VE3-B077	250
35-110774	VE3-B077	251
35-110774	VE3-B077	303
35-110774	VE3-B077	304
35-110774	VE3-B077	312
35-110774	VE3-B077	313
35-110774	VE3-B077	650
35-110774	VE3-B077	651
35-110774	VE3-B077	652
35-110774	VE3-B077	653
35-110774	VE3-B077	664
35-110873	VE3-B087	277
35-110880	VE3-B088	277
35-112716	VE3-B271	130
35-112716	VE3-B271	131
35-113430	VE3-B343	357
35-113454	VE3-B345	357
35-113751	VE3-B375	18
35-113751	VE3-B375	22
35-113751	VE3-B375	539
35-113751	VE3-B375	555
35-113751	VE3-B375	560
35-113751	VE3-B375	568
35-113751	VE3-B375	570
35-113751	VE3-B375	685
35-113751	VE3-B375	688
35-113751	VE3-B375	693
35-113751	VE3-B375	696
35-113751	VE3-B375	698
35-113768	VE3-B376	18
35-113768	VE3-B376	22
35-113768	VE3-B376	539
35-113768	VE3-B376	555
35-113768	VE3-B376	560
35-113768	VE3-B376	568
35-113768	VE3-B376	570
35-113768	VE3-B376	685
35-113768	VE3-B376	688
35-113768	VE3-B376	693
35-113768	VE3-B376	697
35-113768	VE3-B376	698
35-114062	VE3-B406	124
35-114062	VE3-B406	126
35-114079	VE3-B407	124
35-114079	VE3-B407	126
35-114086	VE3-B408	124
35-114086	VE3-B408	126
35-114093	VE3-B409	13
35-114093	VE3-B409	124
35-114093	VE3-B409	126
35-114222	VE3-B422	272
35-114239	VE3-B423	272
35-114253	VE3-B425	272
35-114260	VE3-B426	272
35-114567	VE3-B456	135
35-114574	VE3-B457	135
35-114635	VE3-B463	161
35-114635	VE3-B463	258
35-114635	VE3-B463	259
35-114635	VE3-B463	420
35-114635	VE3-B463	421
35-114635	VE3-B463	422
35-114635	VE3-B463	423
35-114635	VE3-B463	425
35-114635	VE3-B463	469
35-114635	VE3-B463	470
35-114635	VE3-B463	617
35-114635	VE3-B463	618
35-114635	VE3-B463	619
35-114635	VE3-B463	621
35-114635	VE3-B463	649
35-114642	VE3-B464	161
35-114642	VE3-B464	258
35-114642	VE3-B464	259
35-114642	VE3-B464	420
35-114642	VE3-B464	421
35-114642	VE3-B464	422
35-114642	VE3-B464	423
35-114642	VE3-B464	425
35-114642	VE3-B464	469
35-114642	VE3-B464	470
35-114642	VE3-B464	617
35-114642	VE3-B464	618
35-114642	VE3-B464	619
35-114642	VE3-B464	621
35-114642	VE3-B464	649
35-114666	VE3-B466	258
35-114666	VE3-B466	259
35-114666	VE3-B466	420
35-114666	VE3-B466	421
35-114666	VE3-B466	422
35-114666	VE3-B466	423
35-114666	VE3-B466	424
35-114666	VE3-B466	425
35-114666	VE3-B466	617
35-114666	VE3-B466	618
35-114666	VE3-B466	619
35-114666	VE3-B466	621
35-114673	VE3-B467	258
35-114673	VE3-B467	259
35-114673	VE3-B467	420
35-114673	VE3-B467	421
35-114673	VE3-B467	422
35-114673	VE3-B467	423
35-114673	VE3-B467	424
35-114673	VE3-B467	425
35-114673	VE3-B467	617
35-114673	VE3-B467	618
35-114673	VE3-B467	619
35-114673	VE3-B467	621
35-115045	VE3-B504	102
35-115045	VE3-B504	105
35-115045	VE3-B504	106
35-115045	VE3-B504	108
35-115045	VE3-B504	141
35-115052	VE3-B505	102
35-115052	VE3-B505	105
35-115052	VE3-B505	106
35-115052	VE3-B505	108
35-115052	VE3-B505	141
35-115069	VE3-B506	102
35-115069	VE3-B506	103
35-115069	VE3-B506	105
35-115069	VE3-B506	106
35-115069	VE3-B506	108
35-115069	VE3-B506	141
35-115076	VE3-B507	102
35-115076	VE3-B507	103
35-115076	VE3-B507	105
35-115076	VE3-B507	106
35-115076	VE3-B507	108
35-115076	VE3-B507	141
35-115106	VE3-B510	102
35-115106	VE3-B510	103
35-115106	VE3-B510	105
35-115106	VE3-B510	106
35-115106	VE3-B510	108
35-115113	VE3-B511	102
35-115113	VE3-B511	103
35-115113	VE3-B511	105
35-115113	VE3-B511	106
35-115113	VE3-B511	108
35-115298	VE3-B529	271
35-115298	VE3-B529	272
35-115304	VE3-B530	271
35-115304	VE3-B530	272
35-115311	VE3-B531	272
35-115311	VE3-B531	273
35-115328	VE3-B532	272
35-115328	VE3-B532	273
35-115908	VE3-B590	88
35-115908	VE3-B590	89
35-115908	VE3-B590	90
35-115915	VE3-B591	88
35-115915	VE3-B591	89
35-115915	VE3-B591	90
35-115939	VE3-B593	88
35-115939	VE3-B593	89
35-115939	VE3-B593	90
35-115946	VE3-B594	88
35-115946	VE3-B594	89
35-115946	VE3-B594	90
35-116288	VE3-B628	60
35-116288	VE3-B628	62
35-116288	VE3-B628	86
35-116301	VE3-B630	60
35-116301	VE3-B630	62
35-116301	VE3-B630	86
35-116486	*VE3-B648*	*500*
35-116486	*VE3-B648*	*501*
35-116493	*VE3-B649*	*500*
35-116493	*VE3-B649*	*501*
35-118213	VE3-B821	503
35-118213	VE3-B821	505
35-118237	VE3-B823	503
35-118237	VE3-B823	505
35-118251	VA3-B825	503
35-118251	VA3-B825	505
35-118275	VA3-B827	503
35-118275	VA3-B827	505
35-118305	VE3-B830	579
35-118312	VE3-B831	579
35-118336	VE3-B833	579
35-118343	VE3-B834	579
35-118435	VE3-B843	385
35-118459	VE3-B845	385
35-118657	*VE3-B865*	*13*
35-118657	*VE3-B865*	*126*
35-120377	VE3-C037	110
35-120377	VE3-C037	112
35-120377	VE3-C037	114
35-120377	VE3-C037	115
35-120377	VE3-C037	142
35-120384	VE3-C038	110
35-120384	VE3-C038	112
35-120384	VE3-C038	114
35-120384	VE3-C038	115
35-120384	VE3-C038	142
35-120407	VE3-C040	110
35-120407	VE3-C040	112
35-120407	VE3-C040	114
35-120407	VE3-C040	116
35-120407	VE3-C040	142
35-120414	VE3-C041	110
35-120414	VE3-C041	112
35-120414	VE3-C041	114
35-120414	VE3-C041	116
35-120414	VE3-C041	142
35-122074	VE3-C207	573
35-122074	VE3-C207	574
35-122074	VE3-C207	716
35-122074	VE3-C207	718
35-122074	VE3-C207	719
35-122074	VE3-C207	720
35-122074	VE3-C207	746
35-122081	VE3-C208	573
35-122081	VE3-C208	574
35-122081	VE3-C208	716
35-122081	VE3-C208	718
35-122081	VE3-C208	719
35-122081	VE3-C208	720
35-122081	VE3-C208	746
35-122111	VA3-C211	509
35-122111	VA3-C211	510
35-122128	VA3-C212	509
35-122128	VA3-C212	510
35-122135	VA3-C213	509
35-122135	VA3-C213	510
35-122142	VA3-C214	509
35-122142	VA3-C214	510
35-122180	VE3-C218	509
35-122180	VE3-C218	510
35-122197	VE3-C219	509
35-122197	VE3-C219	510
35-122203	VE3-C220	509
35-122203	VE3-C220	510
35-122210	VE3-C221	509
35-122210	VE3-C221	510
35-124092	VE3-C409	137
35-124092	VE3-C409	138
35-124108	VE3-C410	137
35-124108	VE3-C410	138
35-124115	VE3-C411	138
35-124122	VE3-C412	138
35-125228	*VE3-C522*	*152*
35-125228	*VE3-C522*	*496*
35-128625	VE3-C862	397
35-128625	VE3-C862	514
35-128649	VE3-C864	397
35-128649	VE3-C864	514
35-128717	VE3-C871	253
35-132462	*VE3-D246*	*143*
35-132462	*VE3-D246*	*144*
35-132462	*VE3-D246*	*145*
35-132462	*VE3-D246*	*157*
35-132462	*VE3-D246*	*496*
35-135845	VA3-D584	503
35-135845	VA3-D584	505
35-135845	VA3-D584	506
35-135852	VA3-D585	503
35-135852	VA3-D585	505
35-135852	VA3-D585	506
35-135869	VA3-D586	503
35-135869	VA3-D586	505
35-135869	VA3-D586	506
35-135876	VA3-D587	503
35-135876	VA3-D587	505
35-135876	VA3-D587	506
35-135913	VE3-D591	503
35-135913	VE3-D591	505
35-135913	VE3-D591	506
35-135920	VE3-D592	503
35-135920	VE3-D592	505
35-135920	VE3-D592	506
35-135937	VE3-D593	503
35-135937	VE3-D593	505
35-135937	VE3-D593	506
35-135944	VE3-D594	503
35-135944	VE3-D594	505
35-135944	VE3-D594	506
35-136811	VE3-D681	68
35-136811	VE3-D681	69
35-136835	VE3-D683	68
35-136835	VE3-D683	69
35-138266	VE3-D826	478
35-138273	VE3-D827	478
35-138297	VE3-D829	478
35-138303	VE3-D830	478
35-138310	VE3-D831	478
35-138327	VE3-D832	478
35-138341	VE3-D834	478
35-138358	VE3-D835	478
35-139362	VE3-D936	374
35-139362	VE3-D936	375
35-139362	VE3-D936	376
35-139362	VE3-D936	377
35-139379	VE3-D937	374
35-139379	VE3-D937	375
35-139379	VE3-D937	376
35-139379	VE3-D937	377
35-140207	VE3-E020	200
35-140207	VE3-E020	201
35-140207	VE3-E020	434
35-140207	VE3-E020	435
35-140207	VE3-E020	630
35-140207	VE3-E020	631
35-140214	VE3-E021	200
35-140214	VE3-E021	201
35-140214	VE3-E021	434
35-140214	VE3-E021	435
35-140214	VE3-E021	630
35-140214	VE3-E021	631
35-140238	VE3-E023	11
35-140238	VE3-E023	200
35-140238	VE3-E023	201
35-140238	VE3-E023	434
35-140238	VE3-E023	435
35-140238	VE3-E023	630
35-140238	VE3-E023	631
35-140245	VE3-E024	11
35-140245	VE3-E024	200
35-140245	VE3-E024	201
35-140245	VE3-E024	434
35-140245	VE3-E024	435
35-140245	VE3-E024	630
35-140245	VE3-E024	631
35-140610	VE3-E061	237
35-140610	VE3-E061	238
35-140610	VE3-E061	251
35-140627	VE3-E062	237
35-140627	VE3-E062	238
35-140627	VE3-E062	251
35-140634	VE3-E063	237
35-140634	VE3-E063	238
35-140634	VE3-E063	251
35-140795	VE3-E079	167
35-140795	VE3-E079	168
35-140795	VE3-E079	491
35-140801	VE3-E080	167
35-140801	VE3-E080	168
35-140801	VE3-E080	491
35-141068	VE3-E106	158
35-141068	VE3-E106	262
35-141068	VE3-E106	432
35-141068	VE3-E106	447
35-141068	VE3-E106	456
35-141068	VE3-E106	629
35-141068	VE3-E106	630
35-141068	VE3-E106	633
35-141068	VE3-E106	639
35-141075	VE3-E107	158
35-141075	VE3-E107	262
35-141075	VE3-E107	432
35-141075	VE3-E107	447
35-141075	VE3-E107	456
35-141075	VE3-E107	629
35-141075	VE3-E107	630
35-141075	VE3-E107	633
35-141075	VE3-E107	639
35-141099	VE3-E109	158
35-141099	VE3-E109	262
35-141099	VE3-E109	432
35-141099	VE3-E109	448
35-141099	VE3-E109	456
35-141099	VE3-E109	629
35-141099	VE3-E109	630
35-141099	VE3-E109	633
35-141099	VE3-E109	639
35-141105	VE3-E110	158
35-141105	VE3-E110	262
35-141105	VE3-E110	432
35-141105	VE3-E110	448
35-141105	VE3-E110	456
35-141105	VE3-E110	629
35-141105	VE3-E110	630
35-141105	VE3-E110	633
35-141105	VE3-E110	639
35-141662	VE3-E166	138
35-141679	VE3-E167	138
35-141761	VE3-E176	127
35-141761	VE3-E176	128
35-141778	VE3-E177	127
35-141778	VE3-E177	128
35-141792	VE3-E179	127
35-141792	VE3-E179	129
35-141808	VE3-E180	127
35-141808	VE3-E180	129
35-141822	VE3-E182	328
35-141822	VE3-E182	329
35-141822	VE3-E182	330
35-141846	VE3-E184	328
35-141846	VE3-E184	329
35-141846	VE3-E184	330
35-141846	VE3-E184	351
35-142102	VE3-E210	105
35-142102	VE3-E210	106
35-142119	VE3-E211	105
35-142119	VE3-E211	106
35-142287	VE3-E228	374
35-142287	VE3-E228	375
35-142287	VE3-E228	376
35-142287	VE3-E228	377
35-142287	VE3-E228	378
35-142294	VE3-E229	374
35-142294	VE3-E229	375
35-142294	VE3-E229	376
35-142294	VE3-E229	377
35-142294	VE3-E229	378
35-142454	VE3-E245	110
35-142454	VE3-E245	112
35-142454	VE3-E245	114
35-142461	VE3-E246	110
35-142461	VE3-E246	112
35-142461	VE3-E246	114
35-142478	VE3-E247	110
35-142478	VE3-E247	112
35-142478	VE3-E247	114
35-142485	VE3-E248	110
35-142485	VE3-E248	112
35-142485	VE3-E248	114
35-143291	VE3-E329	110
35-143291	VE3-E329	114
35-143291	VE3-E329	116
35-143307	VE3-E330	110
35-143307	VE3-E330	114
35-143307	VE3-E330	116
35-143321	VE3-E332	110
35-143321	VE3-E332	114
35-143321	VE3-E332	115
35-143338	VE3-E333	110
35-143338	VE3-E333	114
35-143338	VE3-E333	115
35-143598	VE3-E359	233
35-143598	VE3-E359	239
35-143598	VE3-E359	246
35-143598	VE3-E359	251
35-143604	VE3-E360	233
35-143604	VE3-E360	239
35-143604	VE3-E360	246
35-143604	VE3-E360	251
35-143611	VE3-E361	233
35-143611	VE3-E361	239
35-143611	VE3-E361	246
35-143611	VE3-E361	251
35-143628	VE3-E362	233
35-143628	VE3-E362	239
35-143628	VE3-E362	246
35-143628	VE3-E362	251
35-144960	VE3-E496	655
35-144960	VE3-E496	664
35-144977	VE3-E497	655
35-144977	VE3-E497	664
35-144984	VE3-E498	655
35-144984	VE3-E498	664
35-144991	VE3-E499	655
35-144991	VE3-E499	664
35-146995	VE3-E699	656
35-156338	VE3-F633	190
35-156338	VE3-F633	204
35-156338	VE3-F633	205
35-156338	VE3-F633	292
35-156345	VE3-F634	190
35-156345	VE3-F634	204
35-156345	VE3-F634	205
35-156345	VE3-F634	292
35-156512	VE3-F651	235
35-156529	VE3-F652	235
35-158707	VE3-F870	689
35-158707	VE3-F870	691
35-158707	VE3-F870	746
35-158707	VE3-F870	747
35-158714	VE3-F871	689
35-158714	VE3-F871	691
35-158738	VE3-F873	689
35-158738	VE3-F873	691
35-158738	VE3-F873	746
35-158738	VE3-F873	747
35-158745	VE3-F874	689
35-158745	VE3-F874	691
35-158790	VE3-F879	11
35-158806	VE3-F880	11
35-164418	VE3-G441	361
35-164432	VE3-G443	160
35-164432	VE3-G443	460
35-164432	VE3-G443	461
35-164432	VE3-G443	462
35-164432	VE3-G443	640
35-164432	VE3-G443	641
35-164432	VE3-G443	642
35-164449	VE3-G444	160

New order number – Old order number

New	Old	Page
35-164449	VE3-G444	460
35-164449	VE3-G444	461
35-164449	VE3-G444	462
35-164449	VE3-G444	640
35-164449	VE3-G444	641
35-164449	VE3-G444	642
35-164456	VE3-G445	160
35-164456	VE3-G445	460
35-164456	VE3-G445	461
35-164456	VE3-G445	462
35-164456	VE3-G445	640
35-164456	VE3-G445	641
35-164456	VE3-G445	642
35-164463	VE3-G446	160
35-164463	VE3-G446	460
35-164463	VE3-G446	461
35-164463	VE3-G446	462
35-164463	VE3-G446	640
35-164463	VE3-G446	641
35-164463	VE3-G446	642
35-165453	VE3-G545	484
35-165675	VE3-G567	484
35-166856	VE3-G685	521
35-166863	VE3-G686	350
35-166887	VE3-G688	350
35-166887	VE3-G688	351
35-167990	VE3-G799	146
35-167990	VE3-G799	436
35-167990	VE3-G799	437
35-167990	VE3-G799	632
35-167990	VE3-G799	633
35-168003	VE3-G800	146
35-168003	VE3-G800	436
35-168003	VE3-G800	437
35-168003	VE3-G800	632
35-168003	VE3-G800	633
35-168027	VE3-G802	146
35-168027	VE3-G802	436
35-168027	VE3-G802	437
35-168027	VE3-G802	632
35-168027	VE3-G802	633
35-168034	VE3-G803	146
35-168034	VE3-G803	436
35-168034	VE3-G803	437
35-168034	VE3-G803	632
35-168034	VE3-G803	633
35-168560	VE3-G856	14
35-168560	VE3-G856	551
35-168560	VE3-G856	552
35-168560	VE3-G856	727
35-168577	VE3-G857	14
35-168577	VE3-G857	551
35-168577	VE3-G857	552
35-168577	VE3-G857	727
35-170631	VE3-H063	139
35-170648	VE3-H064	139
35-170662	VE3-H066	139
35-170679	VE3-H067	139
35-170815	VE3-H081	328
35-170815	VE3-H081	329
35-171294	VE3-H129	135
35-171294	VE3-H129	143
35-171300	VE3-H130	135
35-171300	VE3-H130	143
35-171553	VE3-H155	135
35-171553	VE3-H155	143
35-171560	VE3-H156	135
35-171560	VE3-H156	143
35-171669	VE3-H166	156
35-171669	VE3-H166	161
35-171669	VE3-H166	262
35-171669	VE3-H166	263
35-171669	VE3-H166	425
35-171669	VE3-H166	470
35-171669	VE3-H166	619
35-171669	VE3-H166	620
35-171669	VE3-H166	649
35-171676	VE3-H167	156
35-171676	VE3-H167	161
35-171676	VE3-H167	262
35-171676	VE3-H167	263
35-171676	VE3-H167	425
35-171676	VE3-H167	470
35-171676	VE3-H167	619
35-171676	VE3-H167	620
35-171676	VE3-H167	649
35-171690	VE3-H169	156
35-171690	VE3-H169	161
35-171690	VE3-H169	262
35-171690	VE3-H169	263
35-171690	VE3-H169	425
35-171690	VE3-H169	470
35-171690	VE3-H169	619
35-171690	VE3-H169	620
35-171690	VE3-H169	649
35-171706	VE3-H170	156
35-171706	VE3-H170	161
35-171706	VE3-H170	262
35-171706	VE3-H170	263
35-171706	VE3-H170	425
35-171706	VE3-H170	470
35-171706	VE3-H170	619
35-171706	VE3-H170	620
35-171706	VE3-H170	649
35-176862	VE3-H686	169
35-176879	VE3-H687	169
35-176893	VE3-H689	169
35-176893	VE3-H689	172
35-176909	VE3-H690	169
35-176909	VE3-H690	172
35-181590	V36-0104	674
35-181590	V36-0104	676
35-181590	V36-0104	696
35-181675	VE3-5001	580
35-191117		350
35-191339		333
35-191353		288
35-191360		288
35-192954		144
35-192954		146
35-192954		455
35-192954		463
35-192954		465
35-192954		468
35-192954		638
35-192954		643
35-192954		645
35-192954		647
35-192961		144
35-192961		146
35-192961		455
35-192961		463
35-192961		465
35-192961		468
35-192961		638
35-192961		643
35-192961		645
35-192961		647
35-192978		144
35-192978		146
35-192978		455
35-192978		464
35-192978		465
35-192978		468
35-192978		638
35-192978		644
35-192978		645
35-192978		647
35-192985		144
35-192985		146
35-192985		455
35-192985		464
35-192985		465
35-192985		468
35-192985		638
35-192985		644
35-192985		645
35-192985		647
35-193654	VE3-H323	278
35-193661	VE3-H324	278
35-195047		10
35-195054		10
35-195078		10
35-195085		10
35-195276		500
35-195276		501
35-195283		500
35-195283		501
35-195382		377
35-195399		377
35-196389		278
35-197157		135
35-197195		135
35-197263		334
35-197348		278
35-212676		253
35-217480		90
35-217480		117
35-217862		90
35-217862		117
35-221715	*V36-4135*	*524*
35-223276		169
35-223283		169
35-223290		169
35-223290		172
35-223306		169
35-223306		172
35-223993		252
35-223993		253
35-224013		253
35-587736	*V36-58773*	*498*
35-587743	*V36-58774*	*498*
35-593744	VE3-59374	508
35-593751	VE3-59375	508
35-603207	*VE3-60320*	*673*
35-604525	*VE3-60452*	*675*
35-604525	*VE3-60452*	*677*
35-604525	*VE3-60452*	*696*
35-607885	*VE3-60788*	*542*
35-607885	*VE3-60788*	*700*
36-129034	FE1-C903	94
36-129034	FE1-C903	97
36-129041	FE1-C904	94
36-129041	FE1-C904	95
36-129041	FE1-C904	97
36-129041	FE1-C904	101
36-129058	FE1-C905	94
36-129065	FE1-C906	94
36-129065	FE1-C906	95
36-129065	FE1-C906	98
36-129065	FE1-C906	101
36-129096	FE1-C909	120
36-129119	FE1-C911	123
36-129126	FE1-C912	133
36-129133	FE1-C913	133
36-129140	FE1-C914	124
36-129157	FE1-C915	133
36-129164	FE1-C916	124
36-129164	FE1-C916	125
36-129164	FE1-C916	126
36-129171	FE1-C917	124
36-129171	FE1-C917	126
36-129188	FE1-C918	133
36-129195	FE1-C919	133
36-129201	FE1-C920	133
36-129249	FE1-C924	101
36-129249	FE1-C924	102
36-129249	FE1-C924	104
36-129249	FE1-C924	107
36-129256	FE1-C925	102
36-129256	FE1-C925	104
36-129256	FE1-C925	106
36-129256	FE1-C925	107
36-129263	FE1-C926	92
36-129263	FE1-C926	93
36-129270	FE1-C927	119
36-129300	FE1-C930	92
36-129300	FE1-C930	93
36-129317	FE1-C931	120
36-129317	FE1-C931	123
36-129331	FE1-C933	120
36-129348	FE1-C934	132
36-129355	FE1-C935	334
36-129355	FE1-C935	335
36-129355	FE1-C935	338
36-129362	FE1-C936	334
36-129362	FE1-C936	335
36-129362	FE1-C936	339
36-129362	FE1-C936	340
36-129362	FE1-C936	341
36-129379	FE1-C937	334
36-129379	FE1-C937	339
36-129379	FE1-C937	340
36-129379	FE1-C937	341
36-129386	FE1-C938	334
36-129386	FE1-C938	339
36-129416	FE1-C941	334
36-129416	FE1-C941	338
36-129416	FE1-C941	339
36-129416	FE1-C941	341
36-129423	FE1-C942	334
36-129423	FE1-C942	339
36-129423	FE1-C942	341
36-129430	FE1-C943	335
36-129430	FE1-C943	340
36-129447	FE1-C944	313
36-129454	FE1-C945	313
36-129461	FE1-C946	317
36-129478	FE1-C947	317
36-129478	FE1-C947	318
36-129485	FE1-C948	317
36-129485	FE1-C948	319
36-129485	FE1-C948	341
36-129485	FE1-C948	342
36-129485	FE1-C948	345
36-129508	FE1-C950	318
36-129515	FE1-C951	318
36-129522	FE1-C952	353
36-129522	FE1-C952	354
36-129539	*FE1-C953*	*354*
36-129546	FE1-C954	354
36-129553	FE1-C955	354
36-129560	FE1-C956	354
36-129577	FE1-C957	353
36-129577	FE1-C957	354
36-129584	FE1-C958	341
36-129584	FE1-C958	342
36-129584	FE1-C958	344
36-129591	FE1-C959	341
36-129591	FE1-C959	342
36-129591	FE1-C959	343
36-129591	FE1-C959	345
36-129607	FE1-C960	341
36-129607	FE1-C960	342
36-129607	FE1-C960	356
36-129614	FE1-C961	330
36-129614	FE1-C961	341
36-129614	FE1-C961	342
36-129614	FE1-C961	343
36-129614	FE1-C961	345
36-129621	FE1-C962	341
36-129621	FE1-C962	342
36-129621	FE1-C962	343
36-129621	FE1-C962	345
36-129638	FE1-C963	317
36-129638	FE1-C963	318
36-129638	FE1-C963	320
36-129645	FE1-C964	317
36-129645	FE1-C964	318
36-129645	FE1-C964	319
36-129645	FE1-C964	320
36-129652	FE1-C965	317
36-129652	FE1-C965	319
36-129652	FE1-C965	330
36-129652	FE1-C965	356
36-129669	FE1-C966	341
36-129669	FE1-C966	342
36-129669	FE1-C966	343
36-129676	FE1-C967	331
36-129676	FE1-C967	332
36-129676	FE1-C967	341
36-129676	FE1-C967	342
36-129676	FE1-C967	343
36-129676	FE1-C967	345
36-129683	FE1-C968	342
36-129690	FE1-C969	320
36-129690	FE1-C969	321
36-129690	FE1-C969	341
36-129690	FE1-C969	342
36-129690	FE1-C969	343
36-129706	FE1-C970	359
36-129706	FE1-C970	360
36-129713	FE1-C971	337
36-129713	FE1-C971	338
36-129720	FE1-C972	337
36-129720	FE1-C972	338
36-129737	FE1-C973	336
36-129737	FE1-C973	337
36-129737	FE1-C973	338
36-129744	FE1-C974	352
36-129744	FE1-C974	353
36-129751	FE1-C975	316
36-129768	FE1-C976	316
36-129775	FE1-C977	316
36-129782	FE1-C978	336
36-129782	FE1-C978	337
36-129782	FE1-C978	338
36-129782	FE1-C978	352
36-129782	FE1-C978	355
36-129799	FE1-C979	352
36-129799	FE1-C979	353
36-129805	FE1-C980	316
36-129812	FE1-C981	316
36-129829	FE1-C982	214
36-129829	FE1-C982	215
36-129829	FE1-C982	216
36-129829	FE1-C982	240
36-129836	FE1-C983	243
36-129836	FE1-C983	244
36-129836	FE1-C983	245
36-129843	FE1-C984	241
36-129843	FE1-C984	242
36-129850	FE1-C985	241
36-129850	FE1-C985	242
36-129867	FE1-C986	241
36-129867	FE1-C986	242
36-129874	FE1-C987	243
36-129874	FE1-C987	244
36-129874	FE1-C987	245
36-129898	FE1-C989	215
36-129898	FE1-C989	216
36-129898	FE1-C989	217
36-129904	FE1-C990	218
36-129904	FE1-C990	219
36-129904	FE1-C990	240
36-129911	FE1-C991	216
36-129911	FE1-C991	217
36-129911	FE1-C991	218
36-129911	FE1-C991	219
36-129911	FE1-C991	240
36-129928	FE1-C992	235
36-129928	FE1-C992	236
36-129935	FE1-C993	235
36-129935	FE1-C993	236
36-129942	FE1-C994	235
36-129942	FE1-C994	236
36-129959	FE1-C995	235
36-129959	FE1-C995	236
36-129966	FE1-C996	236
36-129980	FE1-C998	236
36-129980	FE1-C998	251
36-129997	FE1-C999	237
36-130016	FE1-D001	236
36-130016	FE1-D001	237
36-130016	FE1-D001	251
36-130023	FE1-D002	236
36-130023	FE1-D002	237
36-130023	FE1-D002	251
36-130030	FE1-D003	223
36-130030	FE1-D003	224
36-130047	FE1-D004	234
36-130054	FE1-D005	234
36-130061	*FE1-D006*	*220*
36-130078	FE1-D007	220
36-130078	FE1-D007	221
36-130085	FE1-D008	220
36-130085	FE1-D008	221
36-130092	FE1-D009	220
36-130092	FE1-D009	221
36-130092	FE1-D009	222
36-130108	FE1-D010	153
36-130108	FE1-D010	430
36-130108	FE1-D010	431
36-130108	FE1-D010	626
36-130115	FE1-D011	410
36-130115	FE1-D011	411
36-130115	FE1-D011	412
36-130115	FE1-D011	413
36-130115	FE1-D011	414
36-130115	FE1-D011	611
36-130122	FE1-D012	410
36-130122	FE1-D012	411
36-130122	FE1-D012	413
36-130122	FE1-D012	609
36-130139	FE1-D013	410
36-130139	FE1-D013	411
36-130139	FE1-D013	412
36-130139	FE1-D013	413
36-130139	FE1-D013	414
36-130139	FE1-D013	609
36-130139	FE1-D013	610
36-130139	FE1-D013	611
36-130146	FE1-D014	256
36-130146	FE1-D014	257
36-130146	FE1-D014	414
36-130146	FE1-D014	416
36-130146	FE1-D014	417
36-130146	FE1-D014	418
36-130146	FE1-D014	419
36-130146	FE1-D014	459
36-130146	FE1-D014	460
36-130146	FE1-D014	462
36-130146	FE1-D014	612
36-130146	FE1-D014	613
36-130146	FE1-D014	614
36-130146	FE1-D014	616
36-130146	FE1-D014	639
36-130146	FE1-D014	641
36-130146	FE1-D014	642
36-130153	FE1-D015	256
36-130153	FE1-D015	257
36-130153	FE1-D015	415
36-130153	FE1-D015	416
36-130153	FE1-D015	417
36-130153	FE1-D015	418
36-130153	FE1-D015	419
36-130153	FE1-D015	459
36-130153	FE1-D015	460
36-130153	FE1-D015	461
36-130153	FE1-D015	462
36-130153	FE1-D015	468
36-130153	FE1-D015	612
36-130153	FE1-D015	613
36-130153	FE1-D015	614
36-130153	FE1-D015	615
36-130153	FE1-D015	616
36-130153	FE1-D015	639
36-130153	FE1-D015	640
36-130153	FE1-D015	641
36-130153	FE1-D015	642
36-130153	FE1-D015	648
36-130160	FE1-D016	256
36-130160	FE1-D016	415
36-130160	FE1-D016	416
36-130160	FE1-D016	417
36-130160	FE1-D016	418
36-130160	FE1-D016	419
36-130160	FE1-D016	459
36-130160	FE1-D016	460
36-130160	FE1-D016	461
36-130160	FE1-D016	462
36-130160	FE1-D016	468
36-130160	FE1-D016	612
36-130160	FE1-D016	613
36-130160	FE1-D016	614
36-130160	FE1-D016	615
36-130160	FE1-D016	616
36-130160	FE1-D016	640
36-130160	FE1-D016	641
36-130160	FE1-D016	642
36-130160	FE1-D016	648
36-130177	FE1-D017	455
36-130177	FE1-D017	638
36-130214	FE1-D021	263
36-130214	FE1-D021	459
36-130214	FE1-D021	460
36-130214	FE1-D021	461
36-130214	FE1-D021	462
36-130214	FE1-D021	468
36-130214	FE1-D021	640

New order number – Old order number

New	Old	Page
36-130214	FE1-D021	641
36-130214	FE1-D021	642
36-130214	FE1-D021	648
36-130221	FE1-D022	449
36-130221	FE1-D022	450
36-130221	FE1-D022	636
36-130252	FE1-D025	459
36-130252	FE1-D025	460
36-130252	FE1-D025	461
36-130252	FE1-D025	639
36-130252	FE1-D025	640
36-130252	FE1-D025	641
36-130269	FE1-D026	462
36-130269	FE1-D026	642
36-130337	FE1-D033	153
36-130337	FE1-D033	430
36-130337	FE1-D033	431
36-130337	FE1-D033	626
36-130399	FE1-D039	442
36-130399	FE1-D039	443
36-130399	FE1-D039	444
36-130399	FE1-D039	445
36-130399	FE1-D039	606
36-130399	FE1-D039	607
36-130412	FE1-D041	457
36-130412	FE1-D041	458
36-130412	FE1-D041	625
36-130429	FE1-D042	457
36-130429	FE1-D042	458
36-130436	FE1-D043	457
36-130436	FE1-D043	458
36-130436	FE1-D043	625
36-130443	FE1-D044	457
36-130443	FE1-D044	458
36-130443	FE1-D044	625
36-130474	FE1-D047	448
36-130474	FE1-D047	449
36-130474	FE1-D047	622
36-130474	FE1-D047	623
36-130481	FE1-D048	410
36-130481	FE1-D048	411
36-130481	FE1-D048	412
36-130481	FE1-D048	413
36-130481	FE1-D048	414
36-130481	FE1-D048	609
36-130481	FE1-D048	610
36-130481	FE1-D048	611
36-130498	FE1-D049	208
36-130504	FE1-D050	526
36-130504	FE1-D050	527
36-130504	FE1-D050	528
36-130504	FE1-D050	529
36-130511	FE1-D051	524
36-130528	FE1-D052	523
36-130535	FE1-D053	523
36-130542	FE1-D054	511
36-130542	FE1-D054	512
36-130559	FE1-D055	511
36-130573	FE1-D057	518
36-130573	FE1-D057	519
36-130580	FE1-D058	519
36-130580	FE1-D058	522
36-130597	FE1-D059	518
36-130597	FE1-D059	519
36-130603	FE1-D060	512
36-130603	FE1-D060	513
36-130610	FE1-D061	512
36-130610	FE1-D061	513
36-130627	FE1-D062	299
36-130634	FE1-D063	299
36-130641	FE1-D064	542
36-130641	FE1-D064	543
36-130641	FE1-D064	544
36-130641	FE1-D064	545
36-130641	FE1-D064	723
36-130641	FE1-D064	724
36-130658	FE1-D065	544
36-130658	FE1-D065	545
36-130665	FE1-D066	674
36-130665	FE1-D066	695
36-130672	FE1-D067	74
36-130689	FE1-D068	74
36-130689	FE1-D068	75
36-130696	FE1-D069	674
36-130696	FE1-D069	695
36-130702	FE1-D070	674
36-130702	FE1-D070	695
36-130719	FE1-D071	78
36-130719	FE1-D071	79
36-130719	FE1-D071	80
36-130719	FE1-D071	84
36-130726	FE1-D072	25
36-130726	FE1-D072	83
36-130733	FE1-D073	25
36-130740	FE1-D074	71
36-130740	FE1-D074	72
36-130740	FE1-D074	73
36-130740	FE1-D074	76
36-130757	FE1-D075	77
36-130757	FE1-D075	78
36-130757	FE1-D075	79
36-130757	FE1-D075	80
36-130757	FE1-D075	82
36-130757	FE1-D075	83
36-130764	FE1-D076	52
36-130764	FE1-D076	54
36-130764	FE1-D076	81
36-130764	FE1-D076	82
36-130771	FE1-D077	72
36-130771	FE1-D077	76
36-130788	FE1-D078	705
36-130795	FE1-D079	705
36-130795	FE1-D079	706
36-130795	FE1-D079	730
36-130801	FE1-D080	705
36-130801	FE1-D080	706
36-130801	FE1-D080	730
36-130818	FE1-D081	543
36-130818	FE1-D081	544
36-130818	FE1-D081	548
36-130818	FE1-D081	558
36-130818	FE1-D081	675
36-130818	FE1-D081	678
36-130818	FE1-D081	735
36-130825	FE1-D082	543
36-130825	FE1-D082	544
36-130825	FE1-D082	548
36-130825	FE1-D082	558
36-130825	FE1-D082	675
36-130825	FE1-D082	676
36-130825	FE1-D082	678
36-130825	FE1-D082	679
36-130825	FE1-D082	735
36-130832	FE1-D083	705
36-130832	FE1-D083	706
36-130832	FE1-D083	730
36-130849	FE1-D084	705
36-130849	FE1-D084	707
36-130856	FE1-D085	705
36-130856	FE1-D085	706
36-130863	FE1-D086	706
36-130870	FE1-D087	706
36-130870	FE1-D087	730
36-130887	FE1-D088	678
36-130894	FE1-D089	678
36-130900	FE1-D090	548
36-130900	FE1-D090	722
36-130900	FE1-D090	723
36-130900	FE1-D090	725
36-130917	FE1-D091	706
36-130917	FE1-D091	707
36-130917	FE1-D091	730
36-130924	FE1-D092	706
36-130948	FE1-D094	671
36-130948	FE1-D094	721
36-130948	FE1-D094	722
36-130955	FE1-D095	695
36-130962	FE1-D096	70
36-130962	FE1-D096	71
36-130962	FE1-D096	702
36-130962	FE1-D096	704
36-130979	FE1-D097	70
36-130979	FE1-D097	71
36-130979	FE1-D097	75
36-130986	FE1-D098	74
36-130993	FE1-D099	74
36-130993	FE1-D099	75
36-131006	FE1-D100	52
36-131006	FE1-D100	81
36-131013	FE1-D101	52
36-131013	FE1-D101	81
36-131020	FE1-D102	54
36-131020	FE1-D102	82
36-131044	FE1-D104	15
36-131051	FE1-D105	69
36-131051	FE1-D105	671
36-131051	FE1-D105	720
36-131051	FE1-D105	721
36-131051	FE1-D105	722
36-131068	FE1-D106	673
36-131075	FE1-D107	702
36-131075	FE1-D107	703
36-131075	FE1-D107	728
36-131075	FE1-D107	729
36-131082	FE1-D108	702
36-131082	FE1-D108	703
36-131082	FE1-D108	704
36-131105	FE1-D110	673
36-131105	FE1-D110	730
36-131112	FE1-D111	542
36-131112	FE1-D111	544
36-131112	FE1-D111	548
36-131112	FE1-D111	558
36-131112	FE1-D111	675
36-131112	FE1-D111	678
36-131112	FE1-D111	735
36-131129	FE1-D112	54
36-131129	FE1-D112	82
36-131136	FE1-D113	558
36-131136	FE1-D113	675
36-131136	FE1-D113	735
36-131143	FE1-D114	676
36-131143	FE1-D114	735
36-131167	FE1-D116	55
36-131167	FE1-D116	57
36-131167	FE1-D116	58
36-131167	FE1-D116	708
36-131167	FE1-D116	710
36-131181	FE1-D118	52
36-131181	FE1-D118	54
36-131181	FE1-D118	81
36-131181	FE1-D118	82
36-131204	FE1-D120	52
36-131204	FE1-D120	54
36-131204	FE1-D120	81
36-131204	FE1-D120	82
36-131228	FE1-D122	559
36-131228	FE1-D122	680
36-131280	FE1-D128	57
36-131280	FE1-D128	58
36-131297	FE1-D129	553
36-131297	FE1-D129	559
36-131297	FE1-D129	665
36-131297	FE1-D129	667
36-131297	FE1-D129	669
36-131297	FE1-D129	680
36-131297	FE1-D129	682
36-131297	FE1-D129	700
36-131310	FE1-D131	738
36-131310	FE1-D131	739
36-131358	FE1-D135	25
36-131358	FE1-D135	28
36-133048	FE1-D304	55
36-133048	FE1-D304	57
36-133055	FE1-D305	684
36-133062	FE1-D306	74
36-133062	FE1-D306	75
36-133086	FE1-D308	77
36-133086	FE1-D308	78
36-133086	FE1-D308	79
36-133086	FE1-D308	83
36-133093	FE1-D309	77
36-133093	FE1-D309	78
36-133109	FE1-D310	77
36-133109	FE1-D310	78
36-133109	FE1-D310	79
36-133109	FE1-D310	80
36-133116	FE1-D311	78
36-133116	FE1-D311	79
36-133116	FE1-D311	82
36-133123	FE1-D312	78
36-133123	FE1-D312	79
36-133123	FE1-D312	83
36-133130	FE1-D313	80
36-133130	FE1-D313	83
36-133147	FE1-D314	52
36-133147	FE1-D314	54
36-133147	FE1-D314	81
36-133147	FE1-D314	82
36-133154	FE1-D315	80
36-133154	FE1-D315	83
36-133154	FE1-D315	84
36-133161	FE1-D316	94
36-133161	FE1-D316	95
36-133161	FE1-D316	98
36-133161	FE1-D316	101
36-133178	FE1-D317	95
36-133185	FE1-D318	99
36-133208	FE1-D320	102
36-133208	FE1-D320	104
36-133208	FE1-D320	106
36-133208	FE1-D320	107
36-133222	FE1-D322	119
36-133239	FE1-D323	119
36-133246	FE1-D324	123
36-133253	FE1-D325	123
36-133260	FE1-D326	125
36-133277	FE1-D327	126
36-133284	FE1-D328	132
36-133291	FE1-D329	133
36-133314	FE1-D331	133
36-133321	FE1-D332	208
36-133338	FE1-D333	214
36-133338	FE1-D333	240
36-133345	FE1-D334	214
36-133345	FE1-D334	215
36-133352	FE1-D335	214
36-133352	FE1-D335	215
36-133352	FE1-D335	240
36-133369	FE1-D336	215
36-133369	FE1-D336	216
36-133369	FE1-D336	217
36-133376	FE1-D337	215
36-133376	FE1-D337	216
36-133376	FE1-D337	217
36-133383	FE1-D338	218
36-133383	FE1-D338	219
36-133383	FE1-D338	240
36-133390	FE1-D339	216
36-133390	FE1-D339	217
36-133390	FE1-D339	218
36-133390	FE1-D339	219
36-133390	FE1-D339	240
36-133406	FE1-D340	218
36-133406	FE1-D340	219
36-133406	FE1-D340	240
36-133413	FE1-D341	220
36-133413	FE1-D341	221
36-133420	FE1-D342	220
36-133420	FE1-D342	221
36-133420	FE1-D342	222
36-133437	FE1-D343	223
36-133437	FE1-D343	224
36-133437	FE1-D343	226
36-133451	FE1-D345	236
36-133468	FE1-D346	236
36-133468	FE1-D346	237
36-133468	FE1-D346	251
36-133475	FE1-D347	237
36-133482	FE1-D348	240
36-133505	FE1-D350	240
36-133529	FE1-D352	218
36-133529	FE1-D352	219
36-133529	FE1-D352	240
36-133550	FE1-D355	241
36-133550	FE1-D355	242
36-133567	FE1-D356	243
36-133574	FE1-D357	243
36-133574	FE1-D357	244
36-133581	*FE1-D358*	*243*
36-133581	*FE1-D358*	*244*
36-133604	*FE1-D360*	*244*
36-133604	*FE1-D360*	*245*
36-133611	*FE1-D361*	*241*
36-133611	*FE1-D361*	*244*
36-133611	*FE1-D361*	*245*
36-133635	FE1-D363	317
36-133635	FE1-D363	318
36-133642	FE1-D364	317
36-133659	FE1-D365	317
36-133659	FE1-D365	319
36-133659	FE1-D365	320
36-133659	FE1-D365	324
36-133659	FE1-D365	330
36-133666	FE1-D366	317
36-133666	FE1-D366	356
36-133673	FE1-D367	317
36-133673	FE1-D367	330
36-133673	FE1-D367	342
36-133680	FE1-D368	317
36-133680	FE1-D368	318
36-133680	FE1-D368	319
36-133680	FE1-D368	321
36-133697	FE1-D369	318
36-133703	FE1-D370	317
36-133703	FE1-D370	318
36-133789	FE1-D378	337
36-133789	FE1-D378	338
36-133796	FE1-D379	337
36-133796	FE1-D379	338
36-133819	FE1-D381	337
36-133819	FE1-D381	338
36-133826	*FE1-D382*	*352*
36-133833	FE1-D383	336
36-133833	FE1-D383	352
36-133840	FE1-D384	352
36-133840	FE1-D384	353
36-133857	FE1-D385	353
36-133864	FE1-D386	353
36-133895	FE1-D389	336
36-133895	FE1-D389	337
36-133918	FE1-D391	442
36-133918	FE1-D391	443
36-133918	FE1-D391	445
36-133918	FE1-D391	606
36-133918	FE1-D391	607
36-133918	FE1-D391	608
36-133925	FE1-D392	414
36-133925	FE1-D392	416
36-133925	FE1-D392	417
36-133925	FE1-D392	612
36-133925	FE1-D392	613
36-133925	FE1-D392	614
36-133932	FE1-D393	262
36-133932	FE1-D393	426
36-133932	FE1-D393	622
36-133949	FE1-D394	153
36-133949	FE1-D394	430
36-133949	FE1-D394	626
36-133963	FE1-D396	442
36-133963	FE1-D396	443
36-133963	FE1-D396	444
36-133963	FE1-D396	606
36-133963	FE1-D396	607
36-133963	FE1-D396	608
36-133970	FE1-D397	442
36-133970	FE1-D397	444
36-133970	FE1-D397	445
36-133970	FE1-D397	606
36-133970	FE1-D397	607
36-133994	FE1-D399	448
36-133994	FE1-D399	449
36-133994	FE1-D399	622
36-133994	FE1-D399	623
36-134007	FE1-D400	448
36-134007	FE1-D400	449
36-134007	FE1-D400	622
36-134007	FE1-D400	623
36-134014	FE1-D401	449
36-134014	FE1-D401	450
36-134014	FE1-D401	636
36-134021	FE1-D402	449
36-134021	FE1-D402	450
36-134021	FE1-D402	636
36-134038	FE1-D403	449
36-134038	FE1-D403	450
36-134038	FE1-D403	636
36-134045	FE1-D404	449
36-134045	FE1-D404	450
36-134045	FE1-D404	451
36-134045	FE1-D404	636
36-134076	FE1-D407	539
36-134076	FE1-D407	568
36-134076	FE1-D407	684
36-134076	FE1-D407	687
36-134076	FE1-D407	693
36-134083	FE1-D408	549
36-134106	FE1-D410	549
36-134106	FE1-D410	723
36-134106	FE1-D410	724
36-134113	FE1-D411	553
36-134113	FE1-D411	559
36-134113	FE1-D411	680
36-134113	FE1-D411	700
36-134137	FE1-D413	665
36-134151	*FE1-D415*	*69*
36-134151	*FE1-D415*	*671*
36-134151	*FE1-D415*	*720*
36-134175	*FE1-D417*	*673*
36-134182	*FE1-D418*	*673*
36-134182	*FE1-D418*	*730*
36-134199	FE1-D419	668
36-134199	FE1-D419	674
36-134243	FE1-D424	673
36-134243	FE1-D424	695
36-134250	FE1-D425	542
36-134250	FE1-D425	669
36-134250	FE1-D425	699
36-134250	FE1-D425	700
36-134267	*FE1-D426*	*699*
36-134267	*FE1-D426*	*700*
36-134281	*FE1-D428*	*701*
36-134281	*FE1-D428*	*702*
36-134281	*FE1-D428*	*704*
36-134298	*FE1-D429*	*70*
36-134298	*FE1-D429*	*702*
36-134298	*FE1-D429*	*703*
36-134298	*FE1-D429*	*704*
36-134298	*FE1-D429*	*728*
36-134298	*FE1-D429*	*729*
36-134311	FE1-D431	702
36-134311	FE1-D431	703
36-134335	FE1-D433	357
36-134342	FE1-D434	671
36-134342	FE1-D434	721
36-134397	*FE1-D439*	*70*
36-134397	*FE1-D439*	*75*
36-134397	*FE1-D439*	*702*
36-134397	*FE1-D439*	*704*
36-134397	*FE1-D439*	*728*
36-134410	FE1-D441	708
36-134427	FE1-D442	708
36-134465	FE1-D446	740
36-134465	FE1-D446	741
36-134472	FE1-D447	740
36-134472	FE1-D447	741
36-134489	FE1-D448	449
36-134489	FE1-D448	450
36-134489	FE1-D448	451
36-134489	FE1-D448	636
36-134496	FE1-D449	316
36-134502	FE1-D450	243
36-134502	FE1-D450	244
36-134502	FE1-D450	245
36-134519	FE1-D451	318
36-134526	FE1-D452	342
36-134526	FE1-D452	343
36-134526	FE1-D452	345
36-147694	FE1-E769	15
36-147700	FE1-E770	15
36-147717	FE1-E771	15
36-147762	FE1-E776	17
36-147779	FE1-E777	20
36-147779	FE1-E777	21
36-147786	FE1-E778	17
36-147786	FE1-E778	20
36-147786	FE1-E778	21
36-147793	FE1-E779	17
36-147793	FE1-E779	21
36-147854	FE1-E785	32

New order number – Old order number

New	Old	Page
36-147861	FE1-E786	32
36-147861	FE1-E786	33
36-147878	FE1-E787	32
36-147878	FE1-E787	33
36-147878	FE1-E787	34
36-147885	FE1-E788	33
36-147885	FE1-E788	35
36-147885	FE1-E788	36
36-147885	FE1-E788	40
36-147885	FE1-E788	41
36-147885	FE1-E788	42
36-147892	FE1-E789	32
36-147892	FE1-E789	33
36-147892	FE1-E789	34
36-147892	FE1-E789	35
36-147892	FE1-E789	36
36-147892	FE1-E789	37
36-147892	FE1-E789	40
36-147892	FE1-E789	41
36-147892	FE1-E789	42
36-147908	FE1-E790	36
36-147908	FE1-E790	37
36-147908	FE1-E790	41
36-147908	FE1-E790	42
36-147908	FE1-E790	44
36-147908	FE1-E790	45
36-147908	FE1-E790	46
36-147915	FE1-E791	32
36-147915	FE1-E791	36
36-147915	FE1-E791	41
36-147915	FE1-E791	42
36-147915	FE1-E791	44
36-147915	FE1-E791	45
36-147915	FE1-E791	46
36-147977	FE1-E797	32
36-147977	FE1-E797	572
36-147984	FE1-E798	32
36-147984	FE1-E798	33
36-147991	FE1-E799	32
36-147991	FE1-E799	33
36-147991	FE1-E799	34
36-148004	FE1-E800	33
36-148004	FE1-E800	35
36-148004	FE1-E800	36
36-148004	FE1-E800	40
36-148004	FE1-E800	41
36-148004	FE1-E800	42
36-148011	FE1-E801	32
36-148011	FE1-E801	33
36-148011	FE1-E801	34
36-148011	FE1-E801	35
36-148011	FE1-E801	36
36-148011	FE1-E801	37
36-148011	FE1-E801	40
36-148011	FE1-E801	41
36-148011	FE1-E801	42
36-148028	FE1-E802	36
36-148028	FE1-E802	37
36-148028	FE1-E802	44
36-148028	FE1-E802	45
36-148028	FE1-E802	46
36-148035	FE1-E803	36
36-148035	FE1-E803	38
36-148035	FE1-E803	39
36-148066	FE1-E806	224
36-148066	FE1-E806	226
36-148073	FE1-E807	521
36-148080	FE1-E808	397
36-148080	FE1-E808	513
36-148080	FE1-E808	521
36-148080	FE1-E808	522
36-148097	FE1-E809	513
36-148097	FE1-E809	521
36-148097	FE1-E809	522
36-148134	FE1-E813	684
36-148158	FE1-E815	569
36-148158	FE1-E815	570
36-148158	FE1-E815	687
36-148158	FE1-E815	693
36-148240	FE1-E824	687
36-148240	FE1-E824	734
36-148257	FE1-E825	734
36-148264	FE1-E826	36
36-148264	FE1-E826	37
36-148264	FE1-E826	39
36-148264	FE1-E826	44
36-148264	FE1-E826	45
36-148264	FE1-E826	46
36-153855	FE1-F385	120
36-153855	FE1-F385	123
36-153862	FE1-F386	120
36-153879	*FE1-F387*	*132*
36-153886	FE1-F388	120
36-153886	FE1-F388	123
36-153893	FE1-F389	94
36-153923	FE1-F392	123
36-153930	FE1-F393	117
36-153930	FE1-F393	130
36-153930	FE1-F393	131
36-153930	FE1-F393	132
36-153947	FE1-F394	133
36-153954	FE1-F395	125
36-153961	FE1-F396	130
36-153978	FE1-F397	132
36-154012	FE1-F401	317
36-154012	FE1-F401	318
36-154029	FE1-F402	318
36-154036	FE1-F403	318
36-154043	FE1-F404	317
36-154043	FE1-F404	318
36-154050	FE1-F405	354
36-154067	FE1-F406	354
36-154074	FE1-F407	319
36-154074	FE1-F407	320
36-154104	FE1-F410	318
36-154104	FE1-F410	320
36-154104	FE1-F410	330
36-154135	FE1-F413	346
36-154142	FE1-F414	346
36-154159	FE1-F415	346
36-154166	FE1-F416	322
36-154166	FE1-F416	324
36-154166	FE1-F416	331
36-154166	FE1-F416	332
36-154166	FE1-F416	342
36-154166	FE1-F416	343
36-154197	FE1-F419	360
36-154203	FE1-F420	360
36-154210	FE1-F421	359
36-154227	FE1-F422	353
36-154234	FE1-F423	360
36-154241	FE1-F424	337
36-154241	FE1-F424	338
36-154265	FE1-F426	243
36-154265	FE1-F426	244
36-154265	FE1-F426	245
36-154272	FE1-F427	242
36-154289	FE1-F428	223
36-154289	FE1-F428	225
36-154296	FE1-F429	226
36-154296	FE1-F429	227
36-154302	FE1-F430	226
36-154302	FE1-F430	227
36-154319	FE1-F431	242
36-154326	FE1-F432	226
36-154326	FE1-F432	227
36-154326	FE1-F432	228
36-154333	FE1-F433	223
36-154340	FE1-F434	223
36-154357	FE1-F435	228
36-154364	FE1-F436	242
36-154364	FE1-F436	243
36-154388	FE1-F438	242
36-154388	FE1-F438	243
36-154432	FE1-F443	224
36-154432	FE1-F443	225
36-154432	FE1-F443	226
36-154432	FE1-F443	241
36-154449	FE1-F444	241
36-154456	FE1-F445	228
36-154487	FE1-F448	415
36-154487	FE1-F448	416
36-154487	FE1-F448	417
36-154487	FE1-F448	419
36-154487	FE1-F448	612
36-154487	FE1-F448	613
36-154487	FE1-F448	614
36-154531	FE1-F453	428
36-154531	FE1-F453	429
36-154531	FE1-F453	634
36-154531	FE1-F453	635
36-154654	FE1-F465	173
36-154654	FE1-F465	174
36-154654	FE1-F465	471
36-154654	FE1-F465	472
36-154654	FE1-F465	475
36-154654	FE1-F465	476
36-154661	FE1-F466	174
36-154661	FE1-F466	472
36-154661	FE1-F466	475
36-154661	FE1-F466	476
36-154678	FE1-F467	475
36-154678	FE1-F467	476
36-154685	FE1-F468	479
36-154685	FE1-F468	480
36-154685	FE1-F468	481
36-154692	FE1-F469	196
36-154692	FE1-F469	556
36-154692	FE1-F469	557
36-154708	FE1-F470	207
36-154715	FE1-F471	207
36-154722	FE1-F472	529
36-154760	FE1-F476	650
36-154760	FE1-F476	651
36-154784	FE1-F478	650
36-154784	FE1-F478	651
36-154791	FE1-F479	658
36-154807	FE1-F480	270
36-154807	FE1-F480	271
36-154814	FE1-F481	269
36-154814	FE1-F481	270
36-154821	FE1-F482	312
36-154845	FE1-F484	378
36-154852	FE1-F485	378
36-154869	FE1-F486	390
36-154869	FE1-F486	404
36-154869	FE1-F486	405
36-154876	FE1-F487	399
36-154883	FE1-F488	403
36-154883	FE1-F488	404
36-154883	FE1-F488	405
36-154890	FE1-F489	399
36-154906	FE1-F490	400
36-154913	FE1-F491	400
36-154944	FE1-F494	305
36-154944	FE1-F494	306
36-154951	FE1-F495	181
36-154951	FE1-F495	183
36-154968	FE1-F496	181
36-154968	FE1-F496	183
36-154999	FE1-F499	75
36-155002	FE1-F500	71
36-155002	FE1-F500	73
36-155002	FE1-F500	76
36-155019	FE1-F501	72
36-155019	FE1-F501	76
36-155071	FE1-F507	75
36-155088	FE1-F508	703
36-155095	FE1-F509	673
36-155095	FE1-F509	731
36-155101	FE1-F510	667
36-155101	FE1-F510	682
36-155118	FE1-F511	738
36-155118	FE1-F511	739
36-155125	FE1-F512	738
36-159048	FE1-F904	525
36-159055	FE1-F905	221
36-159062	FE1-F906	224
36-159123	FE1-F912	215
36-159123	FE1-F912	216
36-159147	FE1-F914	214
36-159147	FE1-F914	215
36-159147	FE1-F914	216
36-159147	FE1-F914	217
36-159178	FE1-F917	222
36-159178	FE1-F917	223
36-159192	FE1-F919	244
36-159192	FE1-F919	245
36-159208	FE1-F920	234
36-159222	FE1-F922	215
36-159239	FE1-F923	244
36-159239	FE1-F923	245
36-159260	FE1-F926	222
36-159284	FE1-F928	214
36-159307	FE1-F930	240
36-159314	FE1-F931	214
36-159321	FE1-F932	214
36-159321	FE1-F932	215
36-159345	*FE1-F934*	*214*
36-159345	*FE1-F934*	*240*
36-159369	FE1-F936	316
36-159376	FE1-F937	352
36-159376	FE1-F937	355
36-159383	FE1-F938	316
36-159413	FE1-F941	360
36-159420	FE1-F942	351
36-159444	FE1-F944	351
36-159451	FE1-F945	317
36-159451	FE1-F945	318
36-159451	FE1-F945	319
36-159468	FE1-F946	354
36-159475	FE1-F947	356
36-159505	FE1-F950	355
36-159512	FE1-F951	354
36-159529	FE1-F952	356
36-159536	FE1-F953	356
36-159543	FE1-F954	356
36-159550	FE1-F955	355
36-159567	FE1-F956	355
36-159574	FE1-F957	318
36-159581	FE1-F958	319
36-159598	FE1-F959	319
36-159604	FE1-F960	317
36-159604	FE1-F960	318
36-159611	FE1-F961	318
36-159635	FE1-F963	91
36-159642	FE1-F964	130
36-159659	FE1-F965	130
36-159697	FE1-F969	131
36-159710	FE1-F971	91
36-159734	FE1-F973	131
36-159741	FE1-F974	91
36-159765	FE1-F976	117
36-159765	FE1-F976	118
36-159819	FE1-F981	91
36-159826	FE1-F982	117
36-159826	FE1-F982	118
36-159826	FE1-F982	130
36-159864	FE1-F986	305
36-159888	FE1-F988	312
36-159895	FE1-F989	305
36-159901	FE1-F990	306
36-159925	FE1-F992	306
36-159932	FE1-F993	306
36-159949	FE1-F994	306
36-159987	FE1-F998	535
36-159987	FE1-F998	536
36-159987	FE1-F998	537
36-159994	*FE1-F999*	*535*
36-159994	*FE1-F999*	*536*
36-159994	*FE1-F999*	*537*
36-160013	FE1-G001	535
36-160013	FE1-G001	536
36-160013	FE1-G001	537
36-160051	FE1-G005	8
36-160068	FE1-G006	8
36-160099	FE1-G009	8
36-160150	FE1-G015	179
36-160150	FE1-G015	180
36-160150	FE1-G015	297
36-160150	FE1-G015	517
36-160167	FE1-G016	397
36-160167	FE1-G016	513
36-160174	FE1-G017	180
36-160174	FE1-G017	517
36-160181	FE1-G018	179
36-160181	FE1-G018	297
36-160181	FE1-G018	517
36-160204	FE1-G020	111
36-160204	FE1-G020	112
36-160211	FE1-G021	511
36-160211	FE1-G021	512
36-160228	FE1-G022	111
36-160235	FE1-G023	115
36-160242	*FE1-G024*	*77*
36-160266	FE1-G026	78
36-160273	FE1-G027	78
36-160280	*FE1-G028*	*77*
36-160303	FE1-G030	698
36-160310	FE1-G031	70
36-160310	FE1-G031	71
36-160327	FE1-G032	69
36-160341	*FE1-G034*	*70*
36-160341	*FE1-G034*	*71*
36-160358	FE1-G035	668
36-160358	FE1-G035	673
36-160358	FE1-G035	695
36-160372	*FE1-G037*	*69*
36-160372	*FE1-G037*	*701*
36-160389	FE1-G038	64
36-160396	FE1-G039	64
36-160402	FE1-G040	64
36-160419	FE1-G041	115
36-160433	FE1-G043	179
36-160433	FE1-G043	180
36-160433	FE1-G043	297
36-160433	FE1-G043	517
36-160464	FE1-G046	515
36-160464	FE1-G046	525
36-160471	FE1-G047	525
36-160488	FE1-G048	529
36-160495	FE1-G049	529
36-160501	FE1-G050	529
36-160518	FE1-G051	515
36-160518	FE1-G051	525
36-160549	FE1-G054	524
36-160556	FE1-G055	293
36-160563	FE1-G056	670
36-160570	FE1-G057	293
36-160587	FE1-G058	78
36-160587	FE1-G058	79
36-160587	FE1-G058	83
36-160594	FE1-G059	79
36-160594	FE1-G059	80
36-160600	FE1-G060	293
36-160617	FE1-G061	78
36-160617	FE1-G061	80
36-160624	FE1-G062	293
36-160631	FE1-G063	699
36-160648	FE1-G064	191
36-160686	FE1-G068	191
36-160716	FE1-G071	546
36-160716	FE1-G071	550
36-160716	FE1-G071	672
36-160716	FE1-G071	726
36-160716	FE1-G071	727
36-160723	FE1-G072	531
36-160730	FE1-G073	208
36-160730	FE1-G073	548
36-160747	FE1-G074	531
36-160778	FE1-G077	485
36-160778	FE1-G077	486
36-160785	FE1-G078	485
36-160792	FE1-G079	531
36-160815	FE1-G081	182
36-160822	FE1-G082	182
36-160839	FE1-G083	490
36-160884	*FE1-G088*	*299*
36-160891	FE1-G089	490
36-160907	FE1-G090	305
36-160907	FE1-G090	306
36-160914	FE1-G091	490
36-160921	FE1-G092	309
36-160945	FE1-G094	489
36-160952	FE1-G095	489
36-161003	FE1-G100	167
36-161041	FE1-G104	298
36-161072	FE1-G107	309
36-161096	FE1-G109	298
36-161133	FE1-G113	591
36-161133	FE1-G113	592
36-161133	FE1-G113	593
36-161157	FE1-G115	457
36-161157	FE1-G115	458
36-161195	FE1-G119	589
36-161249	FE1-G124	602
36-161317	FE1-G131	89
36-161317	FE1-G131	113
36-161324	FE1-G132	109
36-161324	FE1-G132	115
36-161331	FE1-G133	88
36-161331	FE1-G133	90
36-161331	FE1-G133	109
36-161348	FE1-G134	109
36-161348	FE1-G134	113
36-161355	FE1-G135	88
36-161355	FE1-G135	90
36-161362	FE1-G136	109
36-161362	FE1-G136	113
36-161379	FE1-G137	87
36-161379	FE1-G137	88
36-161379	FE1-G137	90
36-161386	FE1-G138	113
36-161393	FE1-G139	87
36-161393	FE1-G139	88
36-161393	FE1-G139	89
36-161409	FE1-G140	128
36-161416	FE1-G141	442
36-161416	FE1-G141	443
36-161416	FE1-G141	606
36-161447	FE1-G144	153
36-161447	FE1-G144	260
36-161447	FE1-G144	261
36-161447	FE1-G144	430
36-161447	FE1-G144	626
36-161454	FE1-G145	439
36-161454	FE1-G145	440
36-161454	FE1-G145	441
36-161454	FE1-G145	604
36-161454	FE1-G145	605
36-161461	FE1-G146	439
36-161461	FE1-G146	440
36-161461	FE1-G146	441
36-161461	FE1-G146	604
36-161461	FE1-G146	605
36-161485	FE1-G148	128
36-161515	FE1-G151	408
36-161515	FE1-G151	409
36-161522	FE1-G152	408
36-161522	FE1-G152	409
36-161539	FE1-G153	408
36-161539	FE1-G153	409
36-161553	FE1-G155	373
36-161560	FE1-G156	408
36-161560	FE1-G156	409
36-161591	FE1-G159	602
36-161614	FE1-G161	591
36-161614	FE1-G161	592
36-161614	FE1-G161	593
36-161638	FE1-G163	591
36-161638	FE1-G163	592
36-161652	FE1-G165	601
36-161676	FE1-G167	399
36-161690	FE1-G169	399
36-161713	FE1-G171	399
36-161720	FE1-G172	399
36-161768	*FE1-G176*	*452*
36-161768	*FE1-G176*	*453*
36-161812	FE1-G181	408
36-161812	FE1-G181	409
36-161829	FE1-G182	408
36-161829	FE1-G182	409
36-161843	FE1-G184	372
36-161935	FE1-G193	403
36-161980	FE1-G198	372
36-161997	FE1-G199	372
36-162017	FE1-G201	132
36-162055	FE1-G205	132
36-162062	FE1-G206	132
36-162222	*FE1-G222*	*379*
36-162222	*FE1-G222*	*383*
36-162260	FE1-G226	381
36-162307	FE1-G230	427
36-162338	FE1-G233	427
36-162390	FE1-G239	439
36-162390	FE1-G239	440
36-162390	FE1-G239	604
36-162451	FE1-G245	462
36-162451	FE1-G245	642
36-162468	FE1-G246	459

New order number – Old order number

New	Old	Page
36-162468	FE1-G246	460
36-162468	FE1-G246	461
36-162468	FE1-G246	462
36-162468	FE1-G246	639
36-162468	FE1-G246	640
36-162468	FE1-G246	641
36-162475	FE1-G247	439
36-162475	FE1-G247	440
36-162475	FE1-G247	441
36-162475	FE1-G247	604
36-162475	FE1-G247	605
36-162475	FE1-G247	608
36-162499	FE1-G249	439
36-162499	FE1-G249	440
36-162499	FE1-G249	441
36-162499	FE1-G249	604
36-162499	FE1-G249	605
36-162512	FE1-G251	439
36-162512	FE1-G251	440
36-162512	FE1-G251	441
36-162512	FE1-G251	604
36-162512	FE1-G251	605
36-162550	FE1-G255	438
36-162567	FE1-G256	438
36-162574	FE1-G257	281
36-162574	FE1-G257	438
36-162604	FE1-G260	408
36-162604	FE1-G260	447
36-162635	FE1-G263	378
36-162635	FE1-G263	379
36-162635	FE1-G263	382
36-162642	FE1-G264	262
36-162642	FE1-G264	426
36-162642	FE1-G264	622
36-162659	FE1-G265	408
36-162659	FE1-G265	447
36-162680	FE1-G268	408
36-162680	FE1-G268	447
36-162741	FE1-G274	281
36-162741	FE1-G274	407
36-162741	FE1-G274	437
36-162741	FE1-G274	438
36-162741	FE1-G274	446
36-162765	FE1-G276	378
36-162765	FE1-G276	382
36-162857	FE1-G285	452
36-162871	FE1-G287	228
36-162871	FE1-G287	229
36-162888	FE1-G288	238
36-162895	FE1-G289	238
36-162901	FE1-G290	237
36-162901	FE1-G290	238
36-162963	FE1-G296	221
36-162987	FE1-G298	139
36-163007	FE1-G300	4
36-163014	FE1-G301	4
36-163021	FE1-G302	2
36-163021	FE1-G302	3
36-163021	FE1-G302	4
36-163045	FE1-G304	99
36-163045	FE1-G304	100
36-163083	FE1-G308	658
36-163106	FE1-G310	656
36-163106	FE1-G310	657
36-163113	FE1-G311	650
36-163120	FE1-G312	658
36-163120	FE1-G312	660
36-163137	FE1-G313	656
36-163137	FE1-G313	657
36-163144	FE1-G314	650
36-163144	FE1-G314	651
36-163151	FE1-G315	658
36-163151	FE1-G315	659
36-163151	FE1-G315	660
36-163168	FE1-G316	658
36-163168	FE1-G316	659
36-163168	FE1-G316	660
36-163182	FE1-G318	656
36-163182	FE1-G318	657
36-163199	FE1-G319	656
36-163199	FE1-G319	657
36-163205	FE1-G320	658
36-163212	FE1-G321	656
36-163212	FE1-G321	657
36-163243	FE1-G324	656
36-163250	FE1-G325	601
36-163274	FE1-G327	565
36-163281	FE1-G328	565
36-163298	FE1-G329	565
36-163304	FE1-G330	565
36-163342	FE1-G334	531
36-163342	FE1-G334	532
36-163359	FE1-G335	531
36-163359	FE1-G335	532
36-163366	FE1-G336	531
36-163366	FE1-G336	532
36-163380	FE1-G338	473
36-163380	FE1-G338	474
36-163403	FE1-G340	473
36-163403	FE1-G340	474
36-163410	FE1-G341	473
36-163410	FE1-G341	474
36-163588	FE1-G358	403
36-163588	FE1-G358	404
36-163588	FE1-G358	405
36-163595	FE1-G359	403
36-163595	FE1-G359	404
36-163601	FE1-G360	400
36-163618	FE1-G361	400
36-163625	FE1-G362	400
36-163632	FE1-G363	400
36-163649	FE1-G364	396
36-163656	FE1-G365	396
36-163663	FE1-G366	396
36-163670	FE1-G367	396
36-163687	FE1-G368	396
36-163694	FE1-G369	396
36-163700	FE1-G370	395
36-163717	FE1-G371	395
36-163731	FE1-G373	346
36-163779	FE1-G377	346
36-163786	FE1-G378	338
36-163793	FE1-G379	322
36-163816	FE1-G381	319
36-163816	FE1-G381	320
36-163823	FE1-G382	312
36-163847	FE1-G384	275
36-163854	FE1-G385	270
36-163854	FE1-G385	271
36-163861	FE1-G386	270
36-163878	FE1-G387	269
36-163878	FE1-G387	270
36-163885	FE1-G388	274
36-163922	FE1-G392	243
36-163991	FE1-G399	226
36-163991	FE1-G399	227
36-164004	FE1-G400	223
36-164011	FE1-G401	223
36-164042	FE1-G404	222
36-164042	FE1-G404	225
36-164059	FE1-G405	222
36-164066	FE1-G406	222
36-164073	FE1-G407	222
36-164080	FE1-G408	222
36-164097	FE1-G409	222
36-164110	FE1-G411	213
36-164127	FE1-G412	203
36-164134	FE1-G413	203
36-164141	FE1-G414	190
36-164158	FE1-G415	190
36-164158	FE1-G415	203
36-164165	FE1-G416	184
36-164172	FE1-G417	184
36-164189	FE1-G418	184
36-164196	FE1-G419	168
36-164202	FE1-G420	167
36-164202	FE1-G420	168
36-164264	FE1-G426	137
36-164271	FE1-G427	137
36-164288	FE1-G428	137
36-164295	FE1-G429	102
36-164295	FE1-G429	104
36-164295	FE1-G429	106
36-164295	FE1-G429	107
36-164301	FE1-G430	659
36-164301	FE1-G430	660
36-164301	FE1-G430	663
36-164318	FE1-G431	183
36-164318	FE1-G431	442
36-164318	FE1-G431	444
36-164318	FE1-G431	445
36-164318	FE1-G431	606
36-164318	FE1-G431	607
36-164318	FE1-G431	608
36-164325	FE1-G432	452
36-164325	FE1-G432	453
36-164332	*FE1-G433*	*426*
36-164332	*FE1-G433*	*427*
36-164332	*FE1-G433*	*452*
36-165599	FE1-G559	358
36-166640	FE1-G664	358
36-166640	FE1-G664	359
36-171835	FE1-H183	326
36-171835	FE1-H183	327
36-171859	FE1-H185	326
36-171859	FE1-H185	327
36-171859	FE1-H185	328
36-171873	FE1-H187	326
36-171873	FE1-H187	327
36-171873	FE1-H187	329
36-171897	FE1-H189	326
36-171897	FE1-H189	327
36-171897	FE1-H189	329
36-171910	FE1-H191	481
36-171910	FE1-H191	482
36-171910	FE1-H191	483
36-171910	FE1-H191	484
36-171927	FE1-H192	481
36-171927	FE1-H192	482
36-171927	FE1-H192	483
36-171927	FE1-H192	484
36-171958	FE1-H195	232
36-171989	FE1-H198	325
36-171989	FE1-H198	344
36-171989	FE1-H198	357
36-172061	FE1-H206	314
36-172078	FE1-H207	314
36-172078	FE1-H207	315
36-172085	FE1-H208	314
36-172085	FE1-H208	315
36-172092	FE1-H209	314
36-172092	FE1-H209	315
36-172153	FE1-H215	229
36-172160	FE1-H216	229
36-172160	FE1-H216	230
36-172214	FE1-H221	231
36-172238	FE1-H223	477
36-172238	FE1-H223	479
36-172245	FE1-H224	477
36-172245	FE1-H224	479
36-172276	FE1-H227	478
36-172283	FE1-H228	327
36-172283	FE1-H228	328
36-172382	FE1-H238	329
36-174041	FE1-H404	135
36-181438	FE1-F929	213
36-181438	FE1-F929	214
36-191536		207
36-191598		42
36-191598		46
36-195428		3
36-195428		4
36-195428		5
36-195428		10
36-195435		3
36-195435		10
36-195442		3
36-195442		10
36-195459		3
36-195473		10
36-195473		11
36-195473		12
36-195480		10
36-195480		11
36-195480		12
36-195497		12
36-195503		11
36-195503		12
36-195534		11
36-195534		12
36-195565		2
36-195565		3
36-195565		189
36-195589		2
36-195589		3
36-195596		2
36-195596		3
36-195602		2
36-195602		3
36-195619		4
36-195633		3
36-195640		5
36-195640		6
36-195657		5
36-195657		6
36-195664		5
36-195664		6
36-195671		5
36-195688		5
36-195718		6
36-195749		6
36-195756		5
36-195763		64
36-195770		64
36-195787		73
36-195794		73
36-195848		25
36-195893		67
36-195909		65
36-195909		66
36-195909		67
36-195916		65
36-195916		66
36-195916		67
36-195923		66
36-195923		67
36-195930		66
36-195930		67
36-195947		65
36-195947		67
36-195978		66
36-195978		67
36-195985		65
36-195985		66
36-195992		66
36-195992		67
36-196029		65
36-196029		67
36-196036		66
36-196036		67
36-196043		66
36-196043		67
36-196050		66
36-196050		67
36-196067		67
36-196081		7
36-196098		7
36-196128		6
36-196128		7
36-196142		8
36-196166		8
36-196173		8
36-196814		361
36-196814		362
36-197484	FE1-G207	134
36-197491	FE1-G203	134
36-197507		165
36-197507		177
36-197620		248
36-197620		249
36-197880		263
36-197880		460
36-197880		461
36-197880		462
36-197880		468
36-197880		640
36-197880		642
36-197880		648
36-197910		336
36-197910		337
36-197910		352
36-197941		410
36-197941		411
36-197941		412
36-197941		413
36-197941		609
36-197941		610
36-197941		611
36-197965		723
36-197965		724
36-197965		725
36-197972		180
36-197989		180
36-197996		180
36-198054		396
36-198078		406
36-198078		471
36-198078		530
36-198085		396
36-198092		396
36-198092		397
36-198108		396
36-198122		397
36-198139		514
36-198139		515
36-198153		163
36-198153		164
36-198153		166
36-198153		493
36-198184		163
36-198184		164
36-198184		165
36-198184		166
36-198184		167
36-198184		493
36-198191		164
36-198191		166
36-198207		596
36-198207		597
36-198221		163
36-198221		164
36-198221		165
36-198221		166
36-198221		177
36-198245		176
36-198245		477
36-198252		164
36-198252		166
36-198252		167
36-198269		166
36-198269		176
36-198276		163
36-198276		164
36-198276		166
36-198313		395
36-198320		516
36-198320		517
36-198337		395
36-198337		515
36-198344		652
36-198351		326
36-198368		164
36-198368		165
36-198368		493
36-198375		345
36-198658		545
36-199358		509
36-199358		733
36-199365		509
36-199365		733
36-199372		509
36-199372		733
36-199389		509
36-199389		733
36-199419		514
36-199426		514
36-199433		514
36-199433		515
36-199488		406
36-199488		471
36-199488		530
36-199525		*566*
36-199525		*567*
36-199525		*571*
36-199525		*572*
36-199532		554
36-199549		554
36-199556		716
36-199556		717
36-199563		716
36-199563		717
36-199570		569
36-199587		*561*
36-199587		*562*
36-199587		*563*
36-199587		*564*
36-199587		*572*
36-199594		568
36-199594		569
36-199600		568
36-199600		569
36-199617		569
36-199624		17
36-199624		539
36-199624		540
36-199631		539
36-199631		540
36-199648		568
36-199655		569
36-199662		716
36-199662		717
36-199679		717
36-199686		209
36-199693		235
36-199709		209
36-199716		169
36-199716		170
36-199723		169
36-199723		170
36-199723		171
36-199730		169
36-199730		170
36-199730		171
36-199747		169
36-199747		170
36-199747		171
36-199754		169
36-199754		171
36-199761		169
36-199761		170
36-199785		169
36-199785		170
36-199785		171
36-199808		169
36-199808		170
36-199808		171
36-199815		716
36-199815		717
36-199822		61
36-199839		716
36-199839		717
36-199846		716
36-199853		447
36-199853		633
36-199860		157
36-199860		447
36-199860		633
36-199877		61
36-199884		571
36-199891		194
36-199907		274
36-199914		519
36-199914		520
36-199921		188
36-199921		189
36-199938		394
36-199945		602
36-199952		393
36-199969		265
36-199969		266
36-199976		402
36-199983		602
36-199990		602
36-200009		235
36-200016		187
36-200016		188
36-200016		189
36-200023		194
36-200030		194
36-200030		195

New order number – Old order number

New	Old	Page
36-200047		594
36-200054		596
36-200054		597
36-200061		595
36-200078		400
36-200078		401
36-200085		596
36-200085		597
36-200085		600
36-200092		274
36-200108	FE1-H190	563
36-200108	FE1-H190	564
36-200108	FE1-H190	672
36-200146		602
36-200153		602
36-200160		602
36-200184		274
36-200191		271
36-200207		595
36-200238		595
36-200238		596
36-200238		597
36-200245		602
36-200252		271
36-200269		209
36-200276		187
36-200276		188
36-200276		189
36-200283		401
36-200283		402
36-200306		393
36-200313		594
36-200313		595
36-200337		594
36-200337		595
36-200344		594
36-200344		595
36-200351		596
36-200351		597
36-200375		597
36-200382		598
36-200399		602
36-200405		271
36-200412		*273*
36-200429		187
36-200436		187
36-200443		594
36-200443		595
36-200450		393
36-200481		602
36-200498		273
36-200504		273
36-200511		402
36-200528		402
36-200535		585
36-200542		379
36-200542		380
36-200542		510
36-200559		602
36-200566		393
36-200573		391
36-200573		392
36-200580		164
36-200580		165
36-200580		166
36-200580		176
36-200580		493
36-200597		594
36-200597		595
36-200610		235
36-200627		391
36-200627		392
36-200634		235
36-200641		187
36-200641		188
36-200641		189
36-200658		391
36-200658		392
36-200658		393
36-200665		585
36-200672		596
36-200672		597
36-200689		598
36-200702		394
36-200726		273
36-200740		150
36-200740		157
36-200740		181
36-200757		209
36-200764		167
36-200764		473
36-200771		209
36-200788		167
36-200788		473
36-200795		167
36-200795		473
36-200801		565
36-200818		358
36-200818		359
36-200825		546

New	Old	Page
36-200825		724
36-200832		585
36-200849		565
36-200849		566
36-200856		293
36-200863		293
36-200870		581
36-200870		582
36-200887		300
36-200887		301
36-200887		302
36-200894		302
36-200900		302
36-200917		390
36-200917		391
36-200917		392
36-200924		380
36-200931		383
36-200931		384
36-200948		583
36-200955		150
36-200955		157
36-200962		25
36-200979		300
36-200979		301
36-200979		302
36-200986		581
36-200986		582
36-201006		196
36-201013		196
36-201020		514
36-201037		522
36-201037		523
36-201044		661
36-201051		293
36-201068		192
36-201075		654
36-201082		652
36-201082		654
36-201099		654
36-201105		655
36-201112		217
36-201112		219
36-201112		222
36-201129		217
36-201129		225
36-201136		220
36-201136		222
36-201143		247
36-201150		247
36-201167		247
36-201174		247
36-201181		249
36-201204		248
36-201204		249
36-201211		391
36-201211		392
36-201228		395
36-201235		602
36-201242		582
36-201242		583
36-201259		579
36-201266		248
36-201266		249
36-201280		248
36-201280		249
36-201358		64
36-201365		65
36-201365		66
36-201365		67
36-201372		66
36-201372		67
36-201372		675
36-201372		678
36-201372		679
36-201372		683
36-201389		520
36-201389		521
36-201396		190
36-201402		203
36-201402		205
36-201419		392
36-201426		393
36-201433		392
36-201440		514
36-201457		199
36-201464		302
36-201471		381
36-201471		382
36-201488		582
36-201488		583
36-201495		516
36-201495		517
36-201501		204
36-201501		205
36-201518		199
36-201525		203
36-201525		205
36-201532		198
36-201549		199

New	Old	Page
36-201556		386
36-201563		193
36-201563		292
36-201570		199
36-201587		204
36-201587		205
36-201594		204
36-201594		205
36-201600		204
36-201600		205
36-201617		362
36-201624		198
36-201624		199
36-201631		300
36-201631		301
36-201648		203
36-201648		204
36-201648		205
36-201655		198
36-201655		199
36-201662		449
36-201679		391
36-201679		392
36-201686		193
36-201686		292
36-201693		198
36-201693		199
36-201709		359
36-201723		200
36-201730		*567*
36-201747		273
36-201761		655
36-201761		656
36-201785		522
36-201792		206
36-201808		206
36-201815		247
36-201822		247
36-201846		199
36-201853		358
36-201860		564
36-201860		565
36-201877		386
36-201884		545
36-201884		546
36-201884		723
36-201884		724
36-201891		*566*
36-201891		*567*
36-201907		542
36-201914		564
36-201938		565
36-201945	FE1-F452	448
36-201945	FE1-F452	449
36-201945	FE1-F452	450
36-201969		*567*
36-201969		*572*
36-202126		357
36-202133		447
36-202133		633
36-202140		157
36-202140		447
36-202140		633
36-202157		292
36-202164		174
36-202164		471
36-202171		471
36-202188		472
36-202201		472
36-202249		169
36-202249		171
36-202287		734
36-202584		*263*
36-202676		598
36-202683	*FE1-G438*	*234*
36-202690	FE1-G323	658
36-202706	*FE1-G398*	*213*
36-202706	*FE1-G398*	*233*
36-202706	*FE1-G398*	*234*
36-202713	*FE1-G391*	*213*
36-202713	*FE1-G391*	*246*
36-202720	FE1-G011	1
36-202720	FE1-G011	9
36-202737	*FE1-G098*	*479*
36-202744	FE1-G118	591
36-202751	FE1-G099	479
36-202768	FE1-G121	591
36-202782	FE1-F968	131
36-202799	FE1-F948	356
36-202843		196
36-202850		359
36-202867	FE1-H219	315
36-202874	FE1-H220	315
36-202928		486
36-202928		487
36-202935		514
36-203000	FE1-F850	338
36-203000	FE1-F850	352
36-203109		723
36-203109		724

New	Old	Page
36-203109		725
36-203123		723
36-203123		724
36-203130		553
36-203130		669
36-203130		723
36-203130		724
36-203147		60
36-203147		61
36-203154		60
36-203154		61
36-203161		60
36-203178		60
36-203178		61
36-203185		60
36-203192		60
36-203192		61
36-203208		60
36-203208		61
36-203215		60
36-203215		61
36-203239		194
36-203246		194
36-203246		195
36-203253		194
36-203253		195
36-203260	FE1-F911	216
36-203260	FE1-F911	218
36-203277	FE1-F913	216
36-203277	FE1-F913	218
36-203277	FE1-F913	219
36-203284		520
36-203291		520
36-203291		521
36-203307		520
36-203307		521
36-203314		520
36-203321		521
36-203987		602
36-204649		602
36-204823		597
36-207275		40
36-207275		41
36-207275		42
36-207275		44
36-207275		45
36-207275		46
36-211272		486
36-211272		487
36-211593		517
36-211968		166
36-212484		166
36-212491		166
36-212514		163
36-212514		164
36-212514		165
36-212514		471
36-212514		472
36-212538		164
36-212545		165
36-212545		493
36-212552		164
36-212552		176
36-212552		493
36-212569		163
36-212569		166
36-212583		395
36-212583		515
36-212590		401
36-212613		33
36-212613		34
36-212613		42
36-212613		46
36-212705		300
36-212705		301
36-212712		300
36-212712		301
36-212910		275
36-213016		522
36-213023		522
36-213023		523
36-213030		522
36-213030		523
36-213177		388
36-213184		388
36-213184		389
36-213191		388
36-213207		388
36-213214		388
36-213214		389
36-213221		388
36-213238		388
36-213245		523
36-213252		389
36-213269		394
36-213276		393
36-213290		393
36-213306		393
36-213450		266
36-213467		265

New	Old	Page
36-213467		266
36-213474		265
36-213474		266
36-213542		402
36-213559		402
36-213566		402
36-213672		433
36-213931		669
36-213962		565
36-213962		669
36-214334		198
36-214334		199
36-214426		487
36-214433		195
36-214433		196
36-214457		308
36-214457		309
36-214464		308
36-214464		309
36-214471		308
36-214471		309
36-214501		225
36-214518		225
36-214525		595
36-214532		595
36-214549		225
36-214556		595
36-214563		595
36-214570		596
36-214594		309
36-214792		652
36-214792		654
36-214808		385
36-214815		275
36-214839		380
36-214846		380
36-214853		400
36-214853		401
36-214860		267
36-214884		271
36-214891		302
36-214907		302
36-214907		303
36-214914		303
36-214921		302
36-214921		303
36-214938		298
36-214945		268
36-214952		268
36-214969		268
36-214976		268
36-214983		268
36-214990		308
36-215003		310
36-215010		185
36-215027		310
36-215034		385
36-215041		384
36-215041		385
36-215058		427
36-215058		456
36-215065		191
36-215096		271
36-215102		308
36-215119		308
36-215126		310
36-215133		405
36-215140		311
36-215171		406
36-215188		267
36-215195		158
36-215201		400
36-215201		401
36-215201		402
36-215218		391
36-215218		392
36-215249		157
36-215249		159
36-215256		157
36-215256		159
36-215270		150
36-215270		157
36-215287		407
36-215300		156
36-215300		157
36-215324		273
36-215331		488
36-215348		224
36-215348		225
36-215379		*407*
36-215386		197
36-215393		197
36-215409		197
36-215416		197
36-215416		198
36-215423		197
36-215423		198
36-215430		197
36-215447		197
36-215447		198

New order number – Old order number

New	Old	Page
36-215515		165
36-215515		493
36-215522		475
36-215522		477
36-215539		477
36-215546		165
36-215638		391
36-215638		392
36-215645		392
36-215645		393
36-215652		392
36-215652		393
36-215669		392
36-215676		391
36-215676		392
36-215744		584
36-215751		584
36-215768		584
36-215775		584
36-215782		584
36-215898		274
36-215911		387
36-215959		381
36-215959		382
36-215966		311
36-216093		311
36-216109		311
36-216116		311
36-216123		311
36-216130		273
36-216147		380
36-216147		575
36-216154		380
36-216161		380
36-216178		298
36-216192		470
36-216192		471
36-216208		298
36-216215		298
36-216222		298
36-216239		380
36-216246		510
36-216260		379
36-216260		380
36-216260		383
36-216260		384
36-216277		379
36-216277		383
36-216277		384
36-216284		406
36-216291		406
36-216307		406
36-216314		395
36-216321		406
36-216338		205
36-216345		205
36-216369		401
36-216376		400
36-216376		401
36-216390		272
36-216406		272
36-216413		272
36-216420		272
36-216437		272
36-216444		272
36-216468		271
36-216475		271
36-216581		156
36-216581		157
36-216581		181
36-216598		157
36-216598		158
36-216604		157
36-216604		158
36-216611		157
36-216611		158
36-216628		157
36-216628		158
36-216635		157
36-216635		158
36-216642		157
36-216659		157
36-216659		158
36-216666		158
36-216673		158
36-216680		158
36-216697		158
36-216703		601
36-216710		601
36-216727		601
36-216734		601
36-216741		310
36-216758		310
36-216765		310
36-216772		310
36-216789		311
36-216796		310
36-216802		310
36-216819		310
36-216826		311
36-216833		311
36-216840		192
36-216857		192
36-216864		192
36-216871		192
36-216888		192
36-217014		397
36-217021		397
36-217038		397
36-217045		405
36-217052		195
36-217069		195
36-217076		195
36-217083		195
36-217090		196
36-217106		196
36-217113		195
36-217120		195
36-217168		195
36-217205		517
36-217212		517
36-217229		395
36-217229		515
36-217236		395
36-217236		515
36-217243		264
36-217243		265
36-217250		264
36-217250		265
36-217267		265
36-217281		264
36-217281		265
36-217298		265
36-217304		267
36-217311		267
36-217328		267
36-217335		267
36-217342		265
36-217359		265
36-217366		395
36-217366		515
36-217373		395
36-217373		515
36-217380		515
36-217397		274
36-217403		274
36-217410		274
36-217427		274
36-217434		274
36-217472		158
36-217496		158
36-217502		156
36-217519		156
36-217533		172
36-217533		491
36-217540		172
36-217564		172
36-217564		491
36-217571		172
36-217588		172
36-217595		172
36-217601		172
36-217601		491
36-217618		206
36-217625		206
36-217632		206
36-217649		206
36-217847		156
36-217939		200
36-218080		653
36-218080		654
36-218080		661
36-218097		650
36-218097		651
36-218110		384
36-218127		661
36-218134		661
36-218141		661
36-218158		654
36-218158		661
36-218165		654
36-218165		661
36-218219		653
36-218226		387
36-218295		653
36-218295		654
36-218301		654
36-218318		656
36-218349		653
36-218547		433
36-218547		434
36-218554		595
36-218585		2
36-218585		3
36-218776		433
36-218776		434
36-218783		433
36-218783		434
36-218790		433
36-218806		433
36-218806		434
36-218813		433
36-218820		433
36-218820		434
36-218837		663
36-218844		663
36-218943		486
36-218943		487
36-218950		487
36-218950		488
36-218967		486
36-218967		487
36-218974		486
36-218974		487
36-218981		487
36-218998		487
36-219001		387
36-219018		387
36-219025		387
36-219032		381
36-219032		382
36-219049		381
36-219049		382
36-219056		308
36-219063		308
36-219148		594
36-219162		191
36-219179		191
36-219193		308
36-219193		309
36-219209		308
36-219209		309
36-219230		405
36-219247		405
36-219254		405
36-219261		427
36-219261		456
36-219278		456
36-219285		407
36-219292		651
36-219308		595
36-219315		595
36-219322		384
36-219322		310
36-219339		310
36-219346		185
36-219353		293
36-219360		581
36-219360		582
36-219377		582
36-219384		581
36-219384		582
36-219391		581
36-219407		581
36-219414		581
36-219414		582
36-219421		581
36-219438		582
36-219445		582
36-219445		583
36-219452		579
36-219476		381
36-219476		382
36-219506		193
36-219506		292
36-219513		655
36-219513		656
36-219520		656
36-219537		522
36-219544		385
36-219544		386
36-219551		385
36-219551		386
36-219568		386
36-219575		386
36-219605		292
36-219605		293
36-219612		292
36-219612		293
36-219636		246
36-219643		246
36-219650		456
36-219667		491
36-219674		491
36-219681		488
36-219698		488
36-219704		488
36-219711		488
36-219728		488
36-219735		488
36-219735		489
36-219742		578
36-219742		580
36-219759		578
36-219759		580
36-219766		185
36-219766		578
36-219773		185
36-219773		578
36-219780		579
36-219797		579
36-219803		580
36-219810		580
36-219841		595
36-219858		390
36-219865		390
36-219872		185
36-219902		73
36-220601		468
36-221158		185
36-221165		185
36-222438		395
36-222445		514
36-223046		383
36-223053		308
36-223053		309
36-223060		308
36-223060		309
36-224067		256
36-224067		414
36-224067		415
36-224067		416
36-224067		418
36-224067		612
36-224067		613
36-224067		615
36-224098		182
36-225378		293
36-226764		546
36-300013		519
36-300013		520
36-300013		521
36-300037		203
36-300037		204
36-300044		203
36-300044		204
36-300051		397
36-300068		397
36-300075		563
36-300075		564
36-774210		263
36-774210		468
36-774210		648
37-000806		229
37-000806		230
37-000806		231
37-129392	FE1-C939	313
37-129408	FE1-C940	313
37-129491	FE1-C949	318
37-129491	FE1-C949	327
37-130275	FE1-D027	431
37-130275	FE1-D027	628
37-130282	FE1-D028	432
37-130282	FE1-D028	629
37-130930	FE1-D093	542
37-130930	FE1-D093	722
37-130930	FE1-D093	723
37-130930	FE1-D093	724
37-131197	FE1-D119	15
37-131302	FE1-D130	55
37-131302	FE1-D130	57
37-131302	FE1-D130	58
37-131302	FE1-D130	708
37-131302	FE1-D130	709
37-131302	FE1-D130	710
37-131302	FE1-D130	711
37-131302	FE1-D130	712
37-131302	FE1-D130	713
37-131302	FE1-D130	714
37-131326	FE1-D132	675
37-131326	FE1-D132	678
37-131333	FE1-D133	15
37-131333	FE1-D133	675
37-131333	FE1-D133	678
37-131333	FE1-D133	735
37-131364	FE1-D136	25
37-131371	FE1-D137	25
37-131371	FE1-D137	28
37-131371	FE1-D137	572
37-131371	FE1-D137	708
37-131371	FE1-D137	709
37-131371	FE1-D137	712
37-131371	FE1-D137	713
37-131371	FE1-D137	714
37-131388	FE1-D138	25
37-131388	FE1-D138	28
37-131388	FE1-D138	42
37-131388	FE1-D138	46
37-131388	FE1-D138	55
37-131388	FE1-D138	58
37-131388	FE1-D138	572
37-131388	FE1-D138	708
37-131388	FE1-D138	709
37-131388	FE1-D138	710
37-131388	FE1-D138	711
37-131388	FE1-D138	712
37-131388	FE1-D138	713
37-131388	FE1-D138	714
37-131395	FE1-D139	55
37-131395	FE1-D139	57
37-131395	FE1-D139	58
37-131395	FE1-D139	572
37-131395	FE1-D139	708
37-131395	FE1-D139	710
37-131401	FE1-D140	545
37-131401	FE1-D140	546
37-131401	FE1-D140	549
37-131401	FE1-D140	725
37-131418	FE1-D141	545
37-131418	FE1-D141	546
37-131418	FE1-D141	549
37-131418	FE1-D141	725
37-131425	FE1-D142	542
37-131425	FE1-D142	553
37-131425	FE1-D142	559
37-131425	FE1-D142	565
37-131425	FE1-D142	566
37-131425	FE1-D142	567
37-131425	FE1-D142	665
37-131425	FE1-D142	667
37-131425	FE1-D142	680
37-131425	FE1-D142	682
37-131425	FE1-D142	699
37-131432	FE1-D143	542
37-131432	FE1-D143	665
37-131432	FE1-D143	667
37-131432	FE1-D143	680
37-131449	FE1-D144	55
37-131449	FE1-D144	57
37-131449	FE1-D144	58
37-131449	FE1-D144	572
37-131449	FE1-D144	708
37-131449	FE1-D144	710
37-131449	FE1-D144	712
37-131449	FE1-D144	713
37-131449	FE1-D144	714
37-133030	FE1-D303	17
37-133030	FE1-D303	20
37-133030	FE1-D303	554
37-133030	FE1-D303	568
37-133030	FE1-D303	569
37-133030	FE1-D303	684
37-133030	FE1-D303	687
37-133498	FE1-D349	684
37-133498	FE1-D349	687
37-133498	FE1-D349	693
37-133627	FE1-D362	313
37-133719	FE1-D371	320
37-133719	FE1-D371	321
37-133719	FE1-D371	322
37-133719	FE1-D371	325
37-133719	FE1-D371	331
37-133719	FE1-D371	332
37-133726	FE1-D372	321
37-133726	FE1-D372	322
37-133726	FE1-D372	331
37-133726	FE1-D372	332
37-133733	FE1-D373	321
37-133733	FE1-D373	322
37-133733	FE1-D373	325
37-133733	FE1-D373	331
37-133740	FE1-D374	321
37-133740	FE1-D374	322
37-133740	FE1-D374	331
37-133740	FE1-D374	332
37-133757	FE1-D375	568
37-133757	FE1-D375	569
37-133757	FE1-D375	684
37-133757	FE1-D375	687
37-133955	FE1-D395	432
37-133955	FE1-D395	629
37-133955	FE1-D395	630
37-134051	FE1-D405	233
37-134051	FE1-D405	538
37-134051	FE1-D405	732
37-134129	FE1-D412	553
37-134129	FE1-D412	559
37-134129	FE1-D412	565
37-134129	FE1-D412	566
37-134129	FE1-D412	667
37-134129	FE1-D412	682
37-134211	FE1-D421	559
37-134211	FE1-D421	676
37-134211	FE1-D421	680
37-134211	FE1-D421	699
37-134211	FE1-D421	700
37-134211	FE1-D421	735
37-134228	FE1-D422	676
37-134228	FE1-D422	678
37-134228	FE1-D422	735
37-134327	FE1-D432	233
37-134327	FE1-D432	538
37-134327	FE1-D432	732
37-134440	FE1-D444	711
37-134440	FE1-D444	713
37-134457	FE1-D445	233
37-134457	FE1-D445	538
37-134457	FE1-D445	732
37-147662	FE1-E766	15
37-147679	FE1-E767	15

New order number – Old order number

New	Old	Page
37-147686	FE1-E768	15
37-147730	FE1-E773	17
37-147730	FE1-E773	21
37-147747	FE1-E774	17
37-147747	FE1-E774	20
37-147747	FE1-E774	21
37-147747	FE1-E774	539
37-147747	FE1-E774	540
37-147747	FE1-E774	554
37-147747	FE1-E774	568
37-147747	FE1-E774	570
37-147754	FE1-E775	17
37-147754	FE1-E775	21
37-147808	FE1-E780	32
37-147808	FE1-E780	35
37-147808	FE1-E780	40
37-147808	FE1-E780	41
37-147808	FE1-E780	44
37-147808	FE1-E780	45
37-147815	FE1-E781	32
37-147815	FE1-E781	33
37-147815	FE1-E781	36
37-147822	FE1-E782	32
37-147822	FE1-E782	33
37-147822	FE1-E782	35
37-147822	FE1-E782	36
37-147839	FE1-E783	32
37-147839	FE1-E783	33
37-147839	FE1-E783	34
37-147839	FE1-E783	36
37-147839	FE1-E783	37
37-147839	FE1-E783	40
37-147839	FE1-E783	41
37-147839	FE1-E783	44
37-147839	FE1-E783	45
37-147846	FE1-E784	33
37-147846	FE1-E784	34
37-147846	FE1-E784	36
37-147846	FE1-E784	37
37-147846	FE1-E784	40
37-147846	FE1-E784	41
37-147846	FE1-E784	42
37-147846	FE1-E784	44
37-147846	FE1-E784	45
37-147921	FE1-E792	32
37-147921	FE1-E792	35
37-147921	FE1-E792	40
37-147921	FE1-E792	41
37-147921	FE1-E792	44
37-147921	FE1-E792	45
37-147938	FE1-E793	32
37-147938	FE1-E793	33
37-147938	FE1-E793	35
37-147938	FE1-E793	36
37-147938	FE1-E793	40
37-147938	FE1-E793	41
37-147938	FE1-E793	44
37-147938	FE1-E793	45
37-147945	FE1-E794	32
37-147945	FE1-E794	33
37-147945	FE1-E794	36
37-147945	FE1-E794	38
37-147945	FE1-E794	39
37-147945	FE1-E794	40
37-147945	FE1-E794	41
37-147945	FE1-E794	44
37-147945	FE1-E794	45
37-147952	FE1-E795	32
37-147952	FE1-E795	33
37-147952	FE1-E795	36
37-147952	FE1-E795	39
37-147952	FE1-E795	41
37-147952	FE1-E795	42
37-147952	FE1-E795	44
37-147952	FE1-E795	45
37-147969	FE1-E796	33
37-147969	FE1-E796	34
37-147969	FE1-E796	36
37-147969	FE1-E796	37
37-147969	FE1-E796	39
37-147969	FE1-E796	41
37-147969	FE1-E796	42
37-147969	FE1-E796	45
37-147969	FE1-E796	46
37-148041	FE1-E804	224
37-148041	FE1-E804	226
37-148058	FE1-E805	224
37-148058	FE1-E805	226
37-148102	FE1-E810	669
37-148102	FE1-E810	670
37-148102	FE1-E810	687
37-148119	FE1-E811	669
37-148119	FE1-E811	670
37-148126	FE1-E812	684
37-148140	FE1-E814	687
37-148140	FE1-E814	693
37-148140	FE1-E814	734
37-148164	FE1-E816	743
37-148164	FE1-E816	744
37-148164	FE1-E816	745
37-148171	FE1-E817	743
37-148171	FE1-E817	744
37-148171	FE1-E817	745
37-148188	FE1-E818	745
37-148188	FE1-E818	746
37-148485	*FE1-E848*	*109*
37-148485	*FE1-E848*	*111*
37-148485	*FE1-E848*	*113*
37-148492	FE1-E849	109
37-148492	FE1-E849	111
37-148492	FE1-E849	113
37-148492	FE1-E849	115
37-148508	FE1-E850	109
37-148508	FE1-E850	112
37-148508	FE1-E850	113
37-148508	FE1-E850	115
37-153991	FE1-F399	346
37-154110	FE1-F411	346
37-154110	FE1-F411	348
37-154127	FE1-F412	346
37-154127	FE1-F412	348
37-154172	FE1-F417	324
37-154189	FE1-F418	324
37-154370	FE1-F437	243
37-154578	FE1-F457	464
37-154578	FE1-F457	466
37-154578	FE1-F457	643
37-154578	FE1-F457	644
37-154578	FE1-F457	645
37-154578	FE1-F457	646
37-154585	FE1-F458	454
37-154585	FE1-F458	464
37-154585	FE1-F458	466
37-154585	FE1-F458	467
37-154585	FE1-F458	637
37-154585	FE1-F458	643
37-154585	FE1-F458	645
37-154585	FE1-F458	646
37-154592	FE1-F459	454
37-154592	FE1-F459	464
37-154592	FE1-F459	465
37-154592	FE1-F459	466
37-154592	FE1-F459	467
37-154592	FE1-F459	643
37-154592	FE1-F459	644
37-154592	FE1-F459	646
37-154608	FE1-F460	454
37-154608	FE1-F460	465
37-154608	FE1-F460	467
37-154608	FE1-F460	637
37-154608	FE1-F460	643
37-154608	FE1-F460	645
37-154608	FE1-F460	647
37-154615	FE1-F461	454
37-154615	FE1-F461	465
37-154615	FE1-F461	467
37-154622	FE1-F462	454
37-154622	FE1-F462	463
37-154622	FE1-F462	466
37-154622	FE1-F462	467
37-154622	FE1-F462	646
37-154622	FE1-F462	647
37-154639	FE1-F463	454
37-154639	FE1-F463	463
37-154639	FE1-F463	467
37-154639	FE1-F463	637
37-154639	FE1-F463	647
37-154646	FE1-F464	168
37-154745	FE1-F474	516
37-154752	FE1-F475	516
37-155131	*FE1-F513*	*699*
37-155155	FE1-F515	559
37-155155	FE1-F515	665
37-155155	FE1-F515	680
37-159108	FE1-F910	229
37-159801	FE1-F980	109
37-159801	FE1-F980	112
37-159801	FE1-F980	113
37-159801	FE1-F980	115
37-160531	FE1-G053	109
37-160531	FE1-G053	112
37-160531	FE1-G053	113
37-160531	FE1-G053	115
37-160654	FE1-G065	561
37-160654	FE1-G065	562
37-160654	FE1-G065	672
37-160654	FE1-G065	726
37-160678	FE1-G067	561
37-160678	FE1-G067	562
37-160678	FE1-G067	564
37-160678	FE1-G067	672
37-160678	FE1-G067	726
37-160692	FE1-G069	546
37-160692	FE1-G069	550
37-160692	FE1-G069	563
37-160692	FE1-G069	564
37-160692	FE1-G069	726
37-160692	FE1-G069	727
37-161019	FE1-G101	167
37-161033	FE1-G103	167
37-161255	FE1-G125	109
37-161255	FE1-G125	112
37-161255	FE1-G125	115
37-161262	FE1-G126	88
37-161262	FE1-G126	90
37-161279	FE1-G127	88
37-161279	FE1-G127	90
37-161286	FE1-G128	88
37-161286	FE1-G128	89
37-161286	FE1-G128	90
37-161293	FE1-G129	87
37-161293	FE1-G129	88
37-161293	FE1-G129	89
37-161309	FE1-G130	87
37-161781	FE1-G178	469
37-161781	FE1-G178	649
37-161798	FE1-G179	469
37-161798	FE1-G179	470
37-161798	FE1-G179	649
37-161804	FE1-G180	469
37-161804	FE1-G180	470
37-161804	FE1-G180	649
37-161859	FE1-G185	127
37-161866	FE1-G186	127
37-161880	FE1-G188	128
37-161897	FE1-G189	128
37-161903	FE1-G190	128
37-161910	FE1-G191	373
37-161927	FE1-G192	373
37-161941	FE1-G194	372
37-161972	FE1-G197	372
37-161972	FE1-G197	373
37-162023	FE1-G202	372
37-162627	FE1-G262	432
37-162627	FE1-G262	629
37-162627	FE1-G262	630
37-162917	FE1-G291	229
37-162924	FE1-G292	228
37-162931	FE1-G293	237
37-162931	FE1-G293	238
37-162948	FE1-G294	237
37-162948	FE1-G294	238
37-163075	FE1-G307	700
37-163372	*FE1-G337*	*516*
37-163433	FE1-G343	463
37-163433	FE1-G343	466
37-163433	FE1-G343	646
37-163488	FE1-G348	454
37-163488	FE1-G348	463
37-163488	FE1-G348	467
37-163495	FE1-G349	454
37-163495	FE1-G349	463
37-163495	FE1-G349	466
37-163495	FE1-G349	469
37-163495	FE1-G349	637
37-163495	FE1-G349	646
37-163549	FE1-G354	257
37-163549	FE1-G354	258
37-163549	FE1-G354	259
37-163549	FE1-G354	420
37-163549	FE1-G354	421
37-163549	FE1-G354	422
37-163549	FE1-G354	423
37-163549	FE1-G354	424
37-163549	FE1-G354	616
37-163549	FE1-G354	617
37-163549	FE1-G354	618
37-163549	FE1-G354	619
37-163556	FE1-G355	258
37-163556	FE1-G355	259
37-163556	FE1-G355	260
37-163556	FE1-G355	420
37-163556	FE1-G355	421
37-163556	FE1-G355	422
37-163556	FE1-G355	423
37-163556	FE1-G355	424
37-163556	FE1-G355	616
37-163556	FE1-G355	617
37-163556	FE1-G355	618
37-163556	FE1-G355	619
37-163556	FE1-G355	621
37-163563	FE1-G356	257
37-163563	FE1-G356	258
37-163563	FE1-G356	259
37-163563	FE1-G356	420
37-163563	FE1-G356	421
37-163563	FE1-G356	422
37-163563	FE1-G356	423
37-163563	FE1-G356	424
37-163563	FE1-G356	616
37-163563	FE1-G356	617
37-163563	FE1-G356	618
37-163563	FE1-G356	621
37-163570	FE1-G357	420
37-163570	FE1-G357	421
37-163570	FE1-G357	422
37-163570	FE1-G357	616
37-163570	FE1-G357	617
37-163570	FE1-G357	618
37-163570	FE1-G357	621
37-163747	FE1-G374	346
37-163747	FE1-G374	348
37-163754	FE1-G375	346
37-163761	FE1-G376	346
37-163761	FE1-G376	348
37-164218	FE1-G421	168
37-164225	FE1-G422	168
37-171827	FE1-H182	326
37-171827	FE1-H182	328
37-171841	FE1-H184	327
37-171841	FE1-H184	328
37-171865	FE1-H186	327
37-171865	FE1-H186	329
37-171889	FE1-H188	327
37-171889	FE1-H188	329
37-171933	FE1-H193	481
37-171933	FE1-H193	482
37-171933	FE1-H193	483
37-171940	FE1-H194	171
37-171940	FE1-H194	481
37-171940	FE1-H194	482
37-171940	FE1-H194	483
37-171940	FE1-H194	484
37-171964	FE1-H196	232
37-171971	FE1-H197	232
37-171995	FE1-H199	357
37-172008	FE1-H200	357
37-172015	FE1-H201	314
37-172015	FE1-H201	315
37-172022	FE1-H202	314
37-172022	FE1-H202	315
37-172039	FE1-H203	314
37-172039	FE1-H203	315
37-172046	FE1-H204	314
37-172046	FE1-H204	315
37-172053	FE1-H205	314
37-172053	FE1-H205	315
37-172107	FE1-H210	314
37-172107	FE1-H210	315
37-172114	FE1-H211	314
37-172114	FE1-H211	315
37-172121	FE1-H212	314
37-172121	FE1-H212	315
37-172138	FE1-H213	314
37-172138	FE1-H213	315
37-172145	FE1-H214	314
37-172145	FE1-H214	315
37-172183	*FE1-H218*	*229*
37-172183	*FE1-H218*	*230*
37-172183	*FE1-H218*	*231*
37-172220	FE1-H222	477
37-172251	FE1-H225	477
37-172251	FE1-H225	479
37-172268	FE1-H226	477
37-172268	FE1-H226	478
37-172299	FE1-H229	326
37-172299	FE1-H229	328
37-172305	FE1-H230	326
37-172312	FE1-H231	327
37-172329	FE1-H232	327
37-172336	FE1-H233	326
37-172343	FE1-H234	327
37-172350	FE1-H235	326
37-172367	FE1-H236	327
37-172374	FE1-H237	327
37-173425	FE1-H342	325
37-174026	FE1-H402	135
37-174033	FE1-H403	135
38-120008		153
38-120008		260
38-120008		261
38-120008		428
38-120008		429
38-120008		430
38-120008		455
38-120008		626
38-120008		634
38-120008		635
38-120008		638
38-129070	FE1-C907	94
38-129070	FE1-C907	95
38-129070	FE1-C907	97
38-129070	FE1-C907	98
38-129070	FE1-C907	100
38-129070	FE1-C907	101
38-129087	FE1-C908	94
38-129087	FE1-C908	95
38-129087	FE1-C908	97
38-129087	FE1-C908	98
38-129087	FE1-C908	101
38-129100	FE1-C910	99
38-129216	FE1-C921	101
38-129216	FE1-C921	104
38-129223	FE1-C922	102
38-129223	FE1-C922	104
38-129223	FE1-C922	107
38-129230	FE1-C923	102
38-129230	FE1-C923	104
38-129230	FE1-C923	106
38-129230	FE1-C923	107
38-129285	FE1-C928	92
38-129292	FE1-C929	92
38-129322	FE1-C932	93
38-129889	FE1-C988	217
38-129889	FE1-C988	219
38-129889	FE1-C988	221
38-130182	FE1-D018	431
38-130182	FE1-D018	432
38-130182	FE1-D018	628
38-130182	FE1-D018	629
38-130182	FE1-D018	630
38-130199	FE1-D019	256
38-130199	FE1-D019	414
38-130199	FE1-D019	416
38-130199	FE1-D019	418
38-130199	FE1-D019	612
38-130199	FE1-D019	613
38-130205	FE1-D020	449
38-130205	FE1-D020	450
38-130205	FE1-D020	636
38-130236	FE1-D023	257
38-130236	FE1-D023	417
38-130236	FE1-D023	419
38-130236	FE1-D023	614
38-130243	FE1-D024	257
38-130243	FE1-D024	417
38-130243	FE1-D024	418
38-130243	FE1-D024	419
38-130243	FE1-D024	614
38-130243	FE1-D024	616
38-130298	FE1-D029	457
38-130298	FE1-D029	458
38-130298	FE1-D029	625
38-130304	FE1-D030	448
38-130304	FE1-D030	449
38-130304	FE1-D030	450
38-130304	FE1-D030	451
38-130304	FE1-D030	622
38-130304	FE1-D030	623
38-130304	FE1-D030	636
38-130311	FE1-D031	449
38-130311	FE1-D031	450
38-130311	FE1-D031	451
38-130311	FE1-D031	623
38-130311	FE1-D031	636
38-130328	FE1-D032	448
38-130328	FE1-D032	622
38-130342	FE1-D034	153
38-130342	FE1-D034	430
38-130342	FE1-D034	431
38-130342	FE1-D034	626
38-130366	FE1-D036	410
38-130366	FE1-D036	411
38-130366	FE1-D036	413
38-130366	FE1-D036	414
38-130366	FE1-D036	442
38-130366	FE1-D036	443
38-130366	FE1-D036	444
38-130366	FE1-D036	606
38-130366	FE1-D036	607
38-130366	FE1-D036	609
38-130366	FE1-D036	610
38-130373	FE1-D037	183
38-130373	FE1-D037	442
38-130373	FE1-D037	443
38-130373	FE1-D037	444
38-130373	FE1-D037	445
38-130373	FE1-D037	606
38-130373	FE1-D037	607
38-130380	FE1-D038	412
38-130380	FE1-D038	414
38-130380	FE1-D038	444
38-130380	FE1-D038	445
38-130380	FE1-D038	608
38-130380	FE1-D038	610
38-130380	FE1-D038	611
38-130403	FE1-D040	153
38-130403	FE1-D040	260
38-130403	FE1-D040	261
38-130403	FE1-D040	430
38-130403	FE1-D040	431
38-130403	FE1-D040	626
38-130458	*FE1-D045*	*262*
38-130458	*FE1-D045*	*426*
38-130458	*FE1-D045*	*622*
38-130465	FE1-D046	410
38-130465	FE1-D046	411
38-130465	FE1-D046	412
38-130465	FE1-D046	413
38-130465	FE1-D046	414
38-130465	FE1-D046	609
38-130465	FE1-D046	610
38-130465	FE1-D046	611
38-130564	FE1-D056	512
38-130564	FE1-D056	513
38-131097	FE1-D109	55
38-131097	FE1-D109	708
38-131097	FE1-D109	709
38-131097	FE1-D109	712
38-131097	FE1-D109	713

New order number – Old order number

New	Old	Page
38-131097	FE1-D109	714
38-131158	FE1-D115	55
38-131158	FE1-D115	708
38-131158	FE1-D115	709
38-131158	FE1-D115	710
38-131172	FE1-D117	740
38-131172	FE1-D117	741
38-131219	FE1-D121	740
38-131219	FE1-D121	741
38-131233	FE1-D123	741
38-131233	FE1-D123	742
38-131240	FE1-D124	741
38-131240	FE1-D124	742
38-131257	FE1-D125	233
38-131257	FE1-D125	538
38-131257	FE1-D125	732
38-131264	FE1-D126	233
38-131264	FE1-D126	538
38-131264	FE1-D126	732
38-131271	FE1-D127	233
38-131271	FE1-D127	538
38-131271	FE1-D127	732
38-131349	FE1-D134	572
38-131349	FE1-D134	709
38-131349	FE1-D134	714
38-133190	FE1-D319	102
38-133190	FE1-D319	104
38-133985	FE1-D398	441
38-133985	FE1-D398	444
38-133985	FE1-D398	445
38-133985	FE1-D398	605
38-133985	FE1-D398	608
38-134401	FE1-D440	708
38-134401	FE1-D440	711
38-134401	FE1-D440	712
38-134401	FE1-D440	714
38-148194	FE1-E819	743
38-148194	FE1-E819	744
38-148194	FE1-E819	745
38-148200	FE1-E820	743
38-148200	FE1-E820	744
38-148224	FE1-E822	745
38-148224	FE1-E822	746
38-153907	FE1-F390	94
38-153914	FE1-F391	99
38-154089	FE1-F408	362
38-154508	FE1-F450	408
38-154508	FE1-F450	409
38-154515	FE1-F451	457
38-154515	FE1-F451	458
38-154515	FE1-F451	459
38-154546	FE1-F454	464
38-154546	FE1-F454	465
38-154546	FE1-F454	643
38-154546	FE1-F454	644
38-154546	FE1-F454	645
38-154553	FE1-F455	454
38-154553	FE1-F455	464
38-154553	FE1-F455	465
38-154553	FE1-F455	637
38-154553	FE1-F455	643
38-154553	FE1-F455	644
38-154553	FE1-F455	645
38-154560	FE1-F456	463
38-161063	FE1-G106	410
38-161063	FE1-G106	411
38-161063	FE1-G106	609
38-161063	FE1-G106	610
38-161421	FE1-G142	428
38-161421	FE1-G142	429
38-161421	FE1-G142	634
38-161421	FE1-G142	635
38-161438	FE1-G143	442
38-161438	FE1-G143	443
38-161438	FE1-G143	606
38-161834	*FE1-G183*	*448*
38-161834	*FE1-G183*	*453*
38-162343	FE1-G234	469
38-162343	FE1-G234	470
38-162343	FE1-G234	649
38-162350	FE1-G235	259
38-162350	FE1-G235	260
38-162350	FE1-G235	423
38-162350	FE1-G235	424
38-162350	FE1-G235	469
38-162350	FE1-G235	470
38-162350	FE1-G235	618
38-162350	FE1-G235	619
38-162350	FE1-G235	621
38-162350	FE1-G235	649
38-162367	FE1-G236	259
38-162367	FE1-G236	423
38-162367	FE1-G236	424
38-162367	FE1-G236	618
38-162367	FE1-G236	619
38-162367	FE1-G236	621
38-162374	FE1-G237	258
38-162374	FE1-G237	259
38-162374	FE1-G237	422
38-162374	FE1-G237	423
38-162374	FE1-G237	424
38-162374	FE1-G237	618
38-162374	FE1-G237	619
38-162374	FE1-G237	621
38-162534	FE1-G253	432
38-162534	FE1-G253	629
38-162534	FE1-G253	630
38-163036	FE1-G303	99
38-163050	FE1-G305	745
38-163067	FE1-G306	743
38-163067	FE1-G306	744
38-163425	FE1-G342	466
38-163425	FE1-G342	467
38-163425	FE1-G342	646
38-163456	FE1-G345	466
38-163456	FE1-G345	467
38-163456	FE1-G345	646
38-163470	FE1-G347	454
38-163470	FE1-G347	637
38-163500	FE1-G350	454
38-163500	FE1-G350	637
38-163524	FE1-G352	257
38-163524	FE1-G352	258
38-163524	FE1-G352	259
38-163524	FE1-G352	420
38-163524	FE1-G352	421
38-163524	FE1-G352	422
38-163524	FE1-G352	616
38-163524	FE1-G352	617
38-163524	FE1-G352	618
38-163531	FE1-G353	257
38-163531	FE1-G353	258
38-163531	FE1-G353	259
38-163531	FE1-G353	420
38-163531	FE1-G353	421
38-163531	FE1-G353	422
38-163531	FE1-G353	616
38-163531	FE1-G353	617
38-164231	FE1-G423	137
38-164248	FE1-G424	137
38-164255	FE1-G425	137
38-222412		454
38-222412		466
38-222412		467
38-222412		637
38-222412		646
38-222412		647
38-225819		262
39-203359		363
39-203359		364
39-203359		365
39-203359		739
39-207999		363
39-207999		739
39-208002		363
39-208002		739
39-208033		364
39-208040		364
39-208040		365
39-208040		366
39-208040		367
39-208064		364
39-208064		365
39-208071		363
39-208071		739
39-208088		363
39-208088		364
39-208088		739
39-208149		364
39-208149		365
39-208149		366
39-208187		*366*
39-208187		*367*
39-208194		366
39-208194		367
39-208200		366
39-208200		367
39-208217		366
39-208217		367
39-208224		366
39-208224		367
39-208231		364
39-208231		365
39-208248		366
39-208248		367
39-208255		366
39-208255		367
39-208262		371
39-208279		364
39-208279		365
39-208286		364
39-208286		365
39-208293		364
39-208293		365
39-208316		364
39-208316		365
39-208316		366
39-208347		368
39-208347		369
39-208347		370
39-208361		369
39-208361		370
39-208378		370
39-208378		371
39-208385		369
39-208385		370
39-208392		368
39-208392		369
39-208392		370
39-208408		368
39-208408		369
39-208408		370
39-208897		370
39-208897		371
39-208903		370
39-208903		371
40-076614	KLF-7661	333
40-076614	KLF-7661	347
40-076614	KLF-7661	349
40-076621	KLF-7662	333
40-076621	KLF-7662	347
40-076621	KLF-7662	349
40-076638	KLF-7663	348
40-076676	KLF-7667	347
40-076683	KLF-7668	347
40-116402	KLF-B640	333
40-116419	KLF-B641	333
40-118673	KLF-B867	358
40-148335	*KLF-E833*	*358*
40-148342	KLF-E834	358
40-148342	KLF-E834	360
40-148342	KLF-E834	361
40-148359	KLF-E835	359
41-173435	BL5-H343	357
41-173435	BL5-H343	358
44-042295	VA5-4229	355
44-042301	VA5-4230	355
44-045357	VA5-4535	355
44-045821	VA5-4582	355
44-046972	VA5-4697	355
44-047023	VA5-4702	355
44-051518	VA5-5151	355
44-051525	VA5-5152	355
44-069483	BL3-6948	284
44-069506	BL3-6950	284
44-100827	VA5-A082	347
44-100827	VA5-A082	349
44-100834	VA5-A083	347
44-100834	VA5-A083	349
44-102265	VA5-A226	347
44-102265	VA5-A226	349
44-102272	VA5-A227	347
44-102272	VA5-A227	349
44-104535	VA5-A453	333
44-104542	VA5-A454	333
44-109462	VA5-A946	355
44-109479	VA5-A947	355
44-109486	VA5-A948	355
44-110475	VA5-B047	355
44-110482	VA5-B048	355
44-110499	VA5-B049	355
44-110505	VA5-B050	355
44-111533	BL5-B153	359
44-121167	BL5-C116	359
44-124748	BL5-C474	295
44-140779	VA5-E077	355
44-140786	VA5-E078	355
44-143657	VA5-E365	347
44-143657	VA5-E365	349
44-143664	VA5-E366	347
44-143664	VA5-E366	349
44-146108	BL5-E610	358
44-156251	BL5-F625	358
44-156251	BL5-F625	360
44-156268	BL5-F626	361
44-165062	BL5-G506	360
44-181666	VA5-5281	347
44-181666	VA5-5281	349
44-181680	VA5-5282	347
44-181680	VA5-5282	349
44-191177	BL5-A775	295
44-191825		134
44-191832		134
44-192075	VA5-H536	355
44-192082	VA5-H537	355
46-000033		138
46-000040		12
46-000057		9
46-000064		9
46-000071		9
46-000088		12
46-000095		12
46-000101		93
46-000118		93
46-000132		94
46-000156		94
46-000163		93
46-000187		540
46-000194		540
46-000200		555
46-000217		555
46-000224		555
46-000262		556
46-000279		568
46-000286		569
46-000293		571
46-000354		571
46-000361		701
46-000378		701
46-000439		713
46-000446		713
46-000453		713
46-000491		715
46-000507		715
46-000514		715
46-000613		105
46-000613		107
46-000637		316
46-000682		161
46-000682		162
46-000736		96
46-000736		98
46-000750		96
46-000750		99
46-000767		96
46-000767		99
46-000781		96
46-000781		99
46-000781		100
46-111890	SN5-B189	16
46-111890	SN5-B189	553
46-111890	SN5-B189	559
46-111890	SN5-B189	566
46-111890	SN5-B189	666
46-111890	SN5-B189	681
46-111906	SN5-B190	16
46-111906	SN5-B190	553
46-111906	SN5-B190	559
46-111906	SN5-B190	566
46-111906	SN5-B190	666
46-111906	SN5-B190	681
46-111920	SN5-B192	255
46-111920	SN5-B192	410
46-111920	SN5-B192	411
46-111920	SN5-B192	413
46-111920	SN5-B192	414
46-111920	SN5-B192	609
46-111920	SN5-B192	610
46-111937	SN5-B193	567
46-111937	SN5-B193	668
46-111937	SN5-B193	683
46-111944	SN5-B194	567
46-111944	SN5-B194	667
46-111944	SN5-B194	683
46-111951	SN5-B195	154
46-111951	SN5-B195	260
46-111951	SN5-B195	261
46-111951	SN5-B195	428
46-111951	SN5-B195	429
46-111951	SN5-B195	430
46-111951	SN5-B195	431
46-111951	SN5-B195	627
46-111951	SN5-B195	628
46-111951	SN5-B195	634
46-111951	SN5-B195	635
46-111975	SN5-B197	543
46-111975	SN5-B197	549
46-111999	SN5-B199	722
46-112002	SN5-B200	542
46-112002	SN5-B200	700
46-112019	SN5-B201	542
46-112019	SN5-B201	700
46-112255	SN5-B225	679
46-112255	SN5-B225	684
46-112279	SN5-B227	677
46-112279	SN5-B227	736
46-113047	SN5-B304	96
46-113047	SN5-B304	98
46-113054	SN5-B305	96
46-113054	SN5-B305	98
46-113221	SN5-B322	677
46-113221	SN5-B322	736
46-180001		102
46-180001		105
46-180001		107
46-180001		108
46-180018		103
46-180018		105
46-180018		107
46-180018		108
46-180018		141
46-180025		103
46-180025		105
46-180025		107
46-180025		108
46-180032		103
46-180049		103
46-180070		104
46-180087		104
46-180094		108
46-180100		104
46-180117		103
46-180117		105
46-180117		108
46-180117		141
46-180124		104
46-180131		103
46-180131		105
46-180148		16
46-180155		16
46-180162		16
46-180179		16
46-180186		16
46-180193		666
46-180193		668
46-180193		681
46-180193		683
46-180209		666
46-180209		668
46-180209		681
46-180209		683
46-180216		16
46-180223		16
46-180230		566
46-180247		567
46-180254		554
46-180261		554
46-180278		554
46-180285		560
46-180292		560
46-180308		666
46-180308		681
46-180315		666
46-180315		681
46-180322		681
46-180339		681
46-180346		681
46-180353		681
46-180360		666
46-180377		666
46-180384		666
46-180391		666
46-180407		668
46-180407		683
46-180414		668
46-180414		683
46-180421		668
46-180421		683
46-180438		668
46-180438		683
46-180452		373
46-180452		374
46-180469		374
46-180469		375
46-180469		378
46-180476		375
46-180476		377
46-180483		88
46-180490		88
46-180506		88
46-180513		88
46-180520		90
46-180537		89
46-180544		110
46-180544		142
46-180551		110
46-180551		142
46-180568		110
46-180575		112
46-180582		112
46-180599		113
46-180605		111
46-180612		111
46-180629		112
46-180636		113
46-180643		114
46-180650		114
46-180667		116
46-180674		116
46-180681		116
46-180698		110
46-180698		114
46-180704		116
46-180711		111
46-180711		142
46-180728		111
46-180728		142
46-180735		113
46-180742		113
46-180759		328
46-180766		328
46-180773		329
46-180780		329
46-180797		93
46-180803		93
46-180810		94
46-180827		94
46-180834		93
46-180841		125
46-180858		125

New order number – Old order number

New	Old	Page
46-180865		125
46-180872		126
46-180889		126
46-180896		126
46-180902		126
46-180919		127
46-180926		125
46-180933		96
46-180933		98
46-180940		96
46-180957		96
46-180957		98
46-180964		100
46-180971		100
46-180988		97
46-180995		101
46-181008		97
46-181015		101
46-181022		96
46-181022		99
46-181039		96
46-181039		99
46-181046		101
46-181053		100
46-181060		100
46-181077		97
46-181084		97
46-181091		101
46-181107		129
46-181107		142
46-181114		129
46-181121		129
46-181138		127
46-181145		127
46-181152		130
46-181169		131
46-181176		130
46-181183		131
46-181190		129
46-181206		129
46-181220		136
46-181237		138
46-181251		138
46-181268		139
46-181275		139
46-181282		230
46-181299		230
46-181299		231
46-181305		231
46-181312		231
46-181329		230
46-181336		227
46-181343		227
46-181350		228
46-181367		228
46-181374		227
46-181374		228
46-181381		228
46-181398		353
46-181404		317
46-181701		319
46-181725		319
46-181732		319
46-181749		319
46-181756		356
46-181763		330
46-181770		330
46-181787		331
46-181794		331
46-181800		322
46-181800		332
46-181800		333
46-181817		322
46-181817		332
46-181817		333
46-181824		323
46-181831		323
46-181862		348
46-181879		347
46-182043		357
46-182050		357
46-182067		350
46-182074		350
46-182081		333
46-182098		315
46-182104		315
46-182111		316
46-182128		258
46-182128		259
46-182128		420
46-182128		421
46-182128		422
46-182128		617
46-182128		618
46-182135		258
46-182135		259
46-182135		420
46-182135		421
46-182135		422
46-182135		617
46-182135		618
46-182142		259
46-182142		423
46-182142		619
46-182142		621
46-182159		259
46-182159		423
46-182159		425
46-182159		619
46-182159		621
46-182166		258
46-182166		259
46-182166		420
46-182166		421
46-182166		422
46-182166		617
46-182166		618
46-182173		259
46-182173		420
46-182173		421
46-182173		422
46-182173		617
46-182180		259
46-182180		423
46-182197		424
46-182197		619
46-182197		622
46-182203		475
46-182203		476
46-182210		475
46-182210		476
46-182227		475
46-182227		476
46-182227		477
46-182234		475
46-182234		476
46-182241		475
46-182258		475
46-182258		476
46-182258		477
46-182265		596
46-182265		597
46-182265		598
46-182272		596
46-182272		597
46-182272		598
46-182289		651
46-182289		652
46-182296		425
46-182296		651
46-182296		652
46-182302		554
46-182319		554
46-182326		554
46-182333		554
46-182340		555
46-182357		555
46-182357		556
46-182364		555
46-182371		555
46-182388		547
46-182395		547
46-182401		38
46-182418		38
46-182425		551
46-182425		552
46-182432		551
46-182432		552
46-182449		550
46-182456		550
46-182463		550
46-182470		550
46-182487		540
46-182494		540
46-182500		541
46-182517		541
46-182524		566
46-182531		566
46-182548		567
46-182555		567
46-182562		568
46-182579		569
46-182586		570
46-182593		571
46-182609		562
46-182609		563
46-182616		562
46-182616		563
46-182623		562
46-182630		562
46-182647		562
46-182654		572
46-182661		572
46-182678		564
46-182685		573
46-182685		574
46-182692		564
46-182708		564
46-182715		564
46-182739		5
46-182739		6
46-182753		5
46-182753		6
46-182760		7
46-182777		7
46-182784		7
46-182791		7
46-182807		7
46-182814		7
46-182852		4
46-182883		4
46-182890		11
46-182906		11
46-182913		5
46-182913		6
46-182920		5
46-182920		6
46-182937		4
46-182944		8
46-182951		7
46-182968		34
46-182975		34
46-182982		35
46-182999		34
46-183002		34
46-183019		35
46-183026		37
46-183033		38
46-183040		38
46-183057		38
46-183064		37
46-183071		38
46-183088		18
46-183095		18
46-183095		19
46-183101		19
46-183118		19
46-183125		19
46-183132		22
46-183156		22
46-183163		22
46-183163		23
46-183170		23
46-183187		23
46-183194		26
46-183194		27
46-183200		26
46-183200		27
46-183217		26
46-183217		27
46-183224		27
46-183231		30
46-183248		30
46-183248		31
46-183255		30
46-183255		31
46-183262		30
46-183262		31
46-183279		27
46-183279		28
46-183286		27
46-183286		28
46-183293		31
46-183309		31
46-183316		31
46-183323		48
46-183323		49
46-183323		85
46-183330		48
46-183330		49
46-183347		49
46-183354		49
46-183361		28
46-183361		32
46-183378		35
46-183385		35
46-183408		19
46-183422		19
46-183439		23
46-183446		23
46-183446		692
46-183521		48
46-183521		49
46-183521		85
46-183736		726
46-183767		686
46-183767		690
46-183774		686
46-183774		690
46-183781		694
46-183798		694
46-183804		697
46-183811		697
46-183927		726
46-183927		727
46-183934		726
46-183934		727
46-183941		711
46-183941		715
46-183958		711
46-183965		711
46-183972		711
46-183972		715
46-183989		711
46-183989		715
46-183996		711
46-184009		734
46-184016		734
46-184023		701
46-184030		701
46-184047		685
46-184115		685
46-184153		686
46-184184		688
46-184191		688
46-184214		688
46-184269		697
46-184290		697
46-184313		697
46-184320		693
46-184337		693
46-184337		694
46-184344		694
46-184351		672
46-184368		672
46-184375		672
46-184382		731
46-184399		719
46-184405		717
46-184412		716
46-184429		718
46-184436		718
46-184443		717
46-184443		718
46-184450		728
46-184467		728
46-184474		685
46-184481		689
46-184498		690
46-184504		691
46-184504		692
46-184511		691
46-184511		692
46-187901		733
46-187918		509
46-187925		231
46-187932		231
46-187949		689
46-187956		689
46-187963		691
46-187963		692
46-187970		691
46-187970		692
46-187987		136
46-187994		554
46-188007		559
46-188014		559
46-188021		560
46-188069		690
46-188076		690
46-188083		65
46-188083		86
46-188090		65
46-188106		134
46-188120		200
46-188120		201
46-188137		200
46-188137		201
46-188144		434
46-188144		435
46-188144		631
46-188151		434
46-188151		435
46-188151		631
46-188168		200
46-188168		201
46-188175		200
46-188175		201
46-188427		96
46-188427		99
46-188427		100
46-188434		10
46-188441		10
46-188465		34
46-188465		43
46-188465		84
46-188472		35
46-188472		43
46-188472		84
46-188489		35
46-188489		43
46-188489		84
46-188496		34
46-188496		43
46-188502		34
46-188502		43
46-188519		35
46-188519		43
46-188526		38
46-188526		46
46-188533		38
46-188533		47
46-188540		38
46-188540		47
46-188557		38
46-188557		47
46-188564		38
46-188564		47
46-188571		38
46-188571		47
46-188588		35
46-188588		43
46-188588		84
46-188595		35
46-188595		43
46-188595		84
46-188601		38
46-188601		47
46-188601		547
46-188618		38
46-188618		47
46-188618		547
46-188670		40
46-188687		39
46-188694		709
46-188700		709
46-188717		709
46-188755		425
46-188755		620
46-188762		425
46-188762		620
46-188779		425
46-188779		620
46-188786		436
46-188786		632
46-188793		436
46-188793		632
46-188816		436
46-188816		632
46-188823		437
46-188823		633
46-188830		437
46-188830		633
46-188847		437
46-188847		633
46-188854		437
46-188854		633
46-188861		255
46-188861		410
46-188861		411
46-188861		413
46-188861		609
46-188861		610
46-188861		611
46-188878		412
46-188878		611
46-188878		620
46-188885		255
46-188885		410
46-188885		411
46-188885		609
46-188885		610
46-188892		418
46-188892		615
46-188908		258
46-188908		260
46-188908		419
46-188908		616
46-188915		418
46-188922		419
46-188939		256
46-188939		257
46-188939		415
46-188939		417
46-188939		613
46-188939		614
46-188946		256
46-188946		257
46-188946		415
46-188946		416
46-188946		612
46-188946		614
46-188953		149
46-188953		257
46-188953		417
46-188953		615
46-188953		621
46-188960		256
46-188960		257
46-188960		415
46-188960		416
46-188960		612
46-188960		614
46-188977		149
46-188977		418
46-188977		615
46-188984		256
46-188984		257
46-188984		415
46-188984		416

New order number – Old order number

New	Old	Page
46-188984		612
46-188984		614
46-188991		257
46-188991		417
46-188991		615
46-188991		621
46-189004		260
46-189004		261
46-189004		428
46-189004		429
46-189004		430
46-189004		627
46-189004		628
46-189011		260
46-189011		261
46-189011		430
46-189011		627
46-189011		628
46-189028		432
46-189028		629
46-189035		262
46-189035		432
46-189035		629
46-189035		630
46-189042		432
46-189059		262
46-189059		432
46-189059		629
46-189059		630
46-189066		26
46-189066		27
46-189073		26
46-189073		27
46-189080		26
46-189080		27
46-189097		26
46-189097		27
46-189103		27
46-189110		27
46-189127		30
46-189134		30
46-189141		30
46-189141		31
46-189158		30
46-189158		31
46-189165		30
46-189165		31
46-189172		30
46-189172		31
46-189189		27
46-189189		28
46-189196		27
46-189196		28
46-189202		27
46-189202		28
46-189219		31
46-189226		31
46-189233		31
46-189233		32
46-189257		28
46-189257		32
46-189264		28
46-189264		32
46-189301		163
46-189318		174
46-189325		174
46-189332		170
46-189332		171
46-189349		170
46-189349		171
46-189356		175
46-189356		176
46-189363		167
46-189363		168
46-189370		168
46-189387		179
46-189387		297
46-189394		180
46-189400		181
46-189424		183
46-189424		184
46-189431		183
46-189431		184
46-189448		132
46-189455		133
46-189462		133
46-189479		133
46-189493		137
46-189509		137
46-189516		137
46-189523		136
46-189530		136
46-189547		135
46-189554		135
46-189554		143
46-189578		68
46-189585		66
46-189585		68
46-189592		66
46-189608		66
46-189608		68
46-189615		68
46-189622		68
46-189639		69
46-189646		69
46-189653		68
46-189653		69
46-189721		50
46-189738		50
46-189745		52
46-189752		52
46-189769		52
46-189776		52
46-189783		51
46-189790		51
46-189806		74
46-189813		74
46-189820		40
46-189837		39
46-189844		60
46-189844		86
46-189851		60
46-189851		86
46-189868		673
46-189868		695
46-189868		730
46-189868		731
46-189875		61
46-189882		60
46-189899		62
46-189905		62
46-189912		62
46-189929		62
46-189936		62
46-189943		673
46-189950		674
46-189950		696
46-189967		674
46-189967		696
46-189981		677
46-189981		736
46-190000		677
46-190000		736
46-190017		677
46-190017		736
46-190024		677
46-190024		736
46-190048		677
46-190048		736
46-190062		679
46-190062		684
46-190079		679
46-190086		679
46-190093		671
46-190109		671
46-190116		224
46-190123		224
46-190130		266
46-190147		267
46-190154		267
46-190178		267
46-190192		*276*
46-190208		269
46-190215		272
46-190246		272
46-190246		273
46-190284		277
46-190291		277
46-190307		303
46-190307		312
46-190314		303
46-190321		303
46-190338		312
46-190345		311
46-190383		314
46-190413		344
46-190420		344
46-190437		344
46-190444		344
46-190475		324
46-190475		326
46-190482		324
46-190482		326
46-190499		349
46-190505		349
46-190529		391
46-190536		464
46-190536		466
46-190536		644
46-190536		645
46-190543		464
46-190543		466
46-190543		644
46-190543		646
46-190550		464
46-190550		466
46-190550		644
46-190550		645
46-190567		464
46-190567		466
46-190567		644
46-190567		646
46-190574		455
46-190574		468
46-190574		638
46-190574		647
46-190581		455
46-190581		468
46-190581		638
46-190581		647
46-190598		455
46-190598		468
46-190598		638
46-190598		647
46-190604		455
46-190604		468
46-190604		638
46-190604		647
46-190611		455
46-190611		468
46-190611		638
46-190611		647
46-190628		455
46-190628		468
46-190628		638
46-190628		647
46-190635		482
46-190642		482
46-190659		482
46-190673		509
46-190697		510
46-190703		654
46-190710		654
46-190727		653
46-190734		653
46-190741		655
46-190765		722
46-190772		725
46-190789		722
46-190796		725
46-190802		725
46-190819		724
46-190833		700
46-190840		724
46-190871		122
46-190888		122
46-190888		124
46-190895		122
46-190901		122
46-190918		122
46-190925		122
46-190925		124
46-190932		123
46-190949		123
46-190956		123
46-190963		204
46-190970		204
46-190987		204
46-190994		204
46-191007		205
46-191014		204
46-191021		205
46-191038		205
46-191045		205
46-191052		205
46-191465		135
46-191465		143
46-192134		742
46-192141		743
46-192141		744
46-192141		745
46-192141		746
46-192158		744
46-192158		745
46-192158		746
46-192165		732
46-192172		732
46-192189		721
46-192189		722
46-192196		56
46-192196		85
46-192202		56
46-192202		85
46-192219		56
46-192219		85
46-192226		57
46-192226		86
46-192233		56
46-192240		56
46-192257		57
46-192264		57
46-192271		59
46-192288		59
46-192295		59
46-192301		59
46-192318		59
46-192325		59
46-192332		59
46-192349		59
46-192356		53
46-192363		53
46-192363		81
46-192370		54
46-192387		54
46-192394		53
46-192400		53
46-192400		81
46-192417		54
46-192424		54
46-192431		24
46-192448		190
46-192455		190
46-192462		190
46-192479		190
46-192486		190
46-192493		190
46-192509		187
46-192516		199
46-192523		199
46-192530		199
46-192547		239
46-192554		239
46-192561		239
46-192578		239
46-192608		239
46-192615		239
46-192646		308
46-192646		309
46-192653		309
46-192660		308
46-192660		309
46-192677		309
46-192721		458
46-192721		459
46-192738		458
46-192738		459
46-192745		460
46-192745		461
46-192745		640
46-192745		641
46-192752		460
46-192752		461
46-192752		640
46-192752		642
46-192769		463
46-192769		643
46-192776		463
46-192776		643
46-192783		460
46-192783		461
46-192783		640
46-192783		641
46-192783		642
46-192790		462
46-192806		450
46-192806		636
46-192813		450
46-192813		636
46-192820		451
46-192820		637
46-192837		451
46-192837		637
46-192851		262
46-192851		426
46-192851		622
46-192868		426
46-192875		472
46-192875		473
46-192882		472
46-192899		472
46-192899		473
46-193285		679
46-193605		500
46-193605		501
46-193803		508
46-193810		64
46-193827		64
46-193834		64
46-193841		64
46-193858		538
46-193865		538
46-193872		233
46-193889		233
46-193896		542
46-193902		320
46-193919		320
46-193926		356
46-193940		246
46-193957		246
46-193964		358
46-194008		464
46-194008		466
46-194008		644
46-194008		646
46-194022		424
46-194039		424
46-194046		285
46-194060		464
46-194060		466
46-194060		644
46-194060		646
46-194077		464
46-194077		466
46-194077		644
46-194077		645
46-194084		466
46-194084		644
46-194084		646
46-194152		191
46-194169		191
46-194183		456
46-194190		456
46-194206		456
46-194213		456
46-194220		263
46-194220		469
46-194220		649
46-194237		469
46-194237		470
46-194237		649
46-194244		161
46-194244		470
46-194244		649
46-194275		478
46-194282		478
46-194299		478
46-194305		478
46-194312		480
46-194312		481
46-194329		480
46-194329		481
46-194336		233
46-194343		233
46-194350		650
46-194367		650
46-194374		534
46-194381		534
46-194398		535
46-194404		535
46-194534		19
46-194541		18
46-194541		19
46-194558		19
46-194565		19
46-194572		22
46-194589		22
46-194596		22
46-194596		23
46-194640		22
46-194657		19
46-194664		19
46-194671		23
46-194688		23
46-194688		692
46-194695		330
46-194695		331
46-194749		560
46-194756		560
46-194763		560
46-194763		561
46-194770		560
46-194770		561
46-194787		693
46-194794		693
46-194794		694
46-194800		694
46-194817		694
46-194824		694
46-194855		685
46-194862		685
46-194879		686
46-194909		686
46-194916		686
46-194961		686
46-194978		688
46-194985		688
46-194992		688
46-195104		128
46-195111		128
46-195128		128
46-195173		129
46-195180		129
46-195197		14
46-195197		15
46-195203		14
46-195203		15
46-223500		10
46-223609		90
46-223661		117
46-223678		117
47-080386	HE5-8038	276
47-080416	HE5-8041	16
47-080416	HE5-8041	66
47-080416	HE5-8041	68
47-080416	HE5-8041	554
47-080416	HE5-8041	666
47-080416	HE5-8041	682
47-080416	HE5-8041	701
47-080478	HE5-8047	66
47-080478	HE5-8047	68

New order number – Old order number

New	Old	Page
47-080478	HE5-8047	554
47-080713	HE5-8071	145
47-080713	HE5-8071	147
47-080713	HE5-8071	154
47-080713	HE5-8071	260
47-080713	HE5-8071	261
47-080713	HE5-8071	428
47-080713	HE5-8071	429
47-080713	HE5-8071	430
47-080713	HE5-8071	431
47-080713	HE5-8071	456
47-080713	HE5-8071	627
47-080713	HE5-8071	628
47-080713	HE5-8071	634
47-080713	HE5-8071	635
47-080713	HE5-8071	639
47-080720	HE5-8072	543
47-080720	HE5-8072	544
47-080720	HE5-8072	545
47-080720	HE5-8072	549
47-080720	HE5-8072	722
47-081888	HE5-8188	545
47-081888	HE5-8188	546
47-081888	HE5-8188	550
47-081888	HE5-8188	725
47-083004	SS0-8300	310
47-083011	*SS0-8301*	*296*
47-086401	HE5-8640	296
47-086937	HE5-8693	57
47-086937	HE5-8693	59
47-086937	HE5-8693	709
47-086937	HE5-8693	711
47-086937	HE5-8693	713
47-086937	HE5-8693	715
47-087392	*HE5-8739*	*264*
47-087392	*HE5-8739*	*265*
47-087484	HE5-8748	148
47-087484	HE5-8748	415
47-087484	HE5-8748	613
47-087484	HE5-8748	614
47-087569	HE5-8756	475
47-087569	HE5-8756	476
47-087569	HE5-8756	477
47-087750	HE5-8775	513
47-100763	HE5-A076	125
47-100770	HE5-A077	322
47-100770	HE5-A077	323
47-100770	HE5-A077	325
47-100770	HE5-A077	326
47-100770	HE5-A077	332
47-100770	HE5-A077	333
47-100817	HE5-A081	170
47-100817	HE5-A081	171
47-100817	HE5-A081	482
47-100817	HE5-A081	483
47-100817	HE5-A081	484
47-101623	HE5-A162	391
47-101746	HE5-A174	579
47-101791	HE5-A179	577
47-101791	HE5-A179	578
47-107632	HE5-A763	574
47-107632	HE5-A763	575
47-110267	HE5-B026	312
47-111165	HE5-B116	129
47-111165	HE5-B116	142
47-111264	HE5-B126	125
47-114609	*HE5-B460*	*503*
47-114609	*HE5-B460*	*505*
47-116115	HE5-B611	357
47-116573	HE5-B657	61
47-116573	HE5-B657	62
47-116573	HE5-B657	86
47-118478	HE5-B847	384
47-118768	HE5-B876	272
47-119215	HE5-B921	4
47-119215	HE5-B921	6
47-119215	HE5-B921	10
47-119444	*HE5-B944*	*35*
47-119444	*HE5-B944*	*38*
47-119444	*HE5-B944*	*40*
47-119444	*HE5-B944*	*43*
47-119444	*HE5-B944*	*47*
47-119536	HE5-B953	161
47-119536	HE5-B953	162
47-119536	HE5-B953	356
47-120471	HE5-C047	89
47-120471	HE5-C047	90
47-120471	HE5-C047	111
47-120471	HE5-C047	113
47-120471	HE5-C047	114
47-120471	HE5-C047	116
47-120471	HE5-C047	142
47-121133	HE5-C113	258
47-121133	HE5-C113	260
47-121133	HE5-C113	420
47-121133	HE5-C113	422
47-121133	HE5-C113	617
47-121133	HE5-C113	618
47-121225	HE5-C122	230
47-121225	HE5-C122	231
47-121225	HE5-C122	250
47-121225	HE5-C122	251
47-121225	HE5-C122	303
47-121225	HE5-C122	304
47-121225	HE5-C122	313
47-121225	HE5-C122	650
47-121225	HE5-C122	651
47-121225	HE5-C122	652
47-121225	HE5-C122	664
47-121928	*HE5-C192*	*509*
47-121928	*HE5-C192*	*510*
47-124226	HE5-C422	577
47-124226	HE5-C422	578
47-124806	HE5-C480	57
47-124806	HE5-C480	59
47-124806	HE5-C480	86
47-124806	HE5-C480	573
47-124806	HE5-C480	709
47-124806	HE5-C480	711
47-124806	HE5-C480	713
47-124806	HE5-C480	715
47-124813	HE5-C481	96
47-124813	HE5-C481	99
47-124813	HE5-C481	100
47-124813	HE5-C481	101
47-124844	HE5-C484	671
47-124844	HE5-C484	675
47-124844	HE5-C484	677
47-124844	HE5-C484	679
47-124844	HE5-C484	684
47-124844	HE5-C484	696
47-124844	HE5-C484	736
47-124851	HE5-C485	16
47-124851	HE5-C485	554
47-124851	HE5-C485	560
47-124851	HE5-C485	666
47-124851	HE5-C485	682
47-124851	HE5-C485	701
47-126848	HE5-C684	103
47-126848	HE5-C684	105
47-126848	HE5-C684	107
47-126848	HE5-C684	108
47-126848	HE5-C684	141
47-126916	HE5-C691	373
47-126916	HE5-C691	374
47-127708	HE5-C770	19
47-127708	HE5-C770	20
47-127708	HE5-C770	23
47-127708	HE5-C770	24
47-127708	HE5-C770	540
47-127708	HE5-C770	541
47-127708	HE5-C770	556
47-127708	HE5-C770	561
47-127708	HE5-C770	569
47-127708	HE5-C770	571
47-127708	HE5-C770	573
47-127708	HE5-C770	574
47-127708	HE5-C770	686
47-127708	HE5-C770	688
47-127708	HE5-C770	691
47-127708	HE5-C770	692
47-127708	HE5-C770	694
47-127708	HE5-C770	697
47-127708	HE5-C770	698
47-127708	HE5-C770	717
47-127708	HE5-C770	718
47-127708	HE5-C770	719
47-127708	HE5-C770	720
47-127708	HE5-C770	734
47-128347	HE5-C834	19
47-128347	HE5-C834	23
47-128347	HE5-C834	540
47-128347	HE5-C834	541
47-128347	HE5-C834	556
47-128347	HE5-C834	561
47-128347	HE5-C834	569
47-128347	HE5-C834	571
47-128347	HE5-C834	686
47-128347	HE5-C834	688
47-128347	HE5-C834	691
47-128347	HE5-C834	694
47-128347	HE5-C834	697
47-128347	HE5-C834	698
47-128705	HE5-C870	514
47-131811	HE5-D181	311
47-138896	HE5-D889	68
47-138896	HE5-D889	69
47-139060	HE5-D906	375
47-139060	HE5-D906	376
47-139060	HE5-D906	377
47-139060	HE5-D906	378
47-139275	HE5-D927	7
47-139275	HE5-D927	8
47-139275	HE5-D927	9
47-139275	HE5-D927	12
47-140868	HE5-E086	672
47-141179	HE5-E117	328
47-141179	HE5-E117	329
47-141179	HE5-E117	330
47-141179	HE5-E117	351
47-146631	HE5-E663	280
47-146914	HE5-E691	546
47-146914	HE5-E691	550
47-146914	HE5-E691	562
47-146914	HE5-E691	563
47-146914	HE5-E691	726
47-146914	HE5-E691	727
47-155770	HE5-F577	209
47-155770	HE5-F577	210
47-155770	HE5-F577	235
47-158276	HE5-F827	690
47-158283	HE5-F828	690
47-158283	HE5-F828	731
47-158993	HE5-F899	190
47-158993	HE5-F899	292
47-164499	HE5-G449	11
47-164499	HE5-G449	200
47-164499	HE5-G449	201
47-164499	HE5-G449	434
47-164499	HE5-G449	435
47-164499	HE5-G449	631
47-165403	HE5-G540	576
47-165854	HE5-G585	275
47-167254	HE5-G725	262
47-167254	HE5-G725	432
47-167254	HE5-G725	457
47-167254	HE5-G725	629
47-167254	HE5-G725	630
47-167254	HE5-G725	639
47-167490	HE5-G749	225
47-167490	HE5-G749	250
47-167490	HE5-G749	298
47-167551	HE5-G755	297
47-167551	HE5-G755	582
47-168053	HE5-G805	380
47-168091	HE5-G809	14
47-168091	HE5-G809	15
47-168091	HE5-G809	551
47-168091	HE5-G809	552
47-168091	HE5-G809	728
47-168299	HE5-G829	168
47-169289	HE5-G928	35
47-169289	HE5-G928	38
47-169289	HE5-G928	40
47-169289	HE5-G928	43
47-169289	HE5-G928	47
47-169289	HE5-G928	84
47-169289	HE5-G928	547
47-171329	HE5-H132	273
47-171725	HE5-H172	156
47-171725	HE5-H172	161
47-171725	HE5-H172	262
47-171725	HE5-H172	263
47-171725	HE5-H172	425
47-171725	HE5-H172	620
47-172401	HE5-H240	275
47-172586	HE5-H258	524
47-172708	HE5-H270	278
47-175976	HE5-H597	169
47-175976	HE5-H597	172
47-188044	HE5-H416	602
47-193680		278
47-196568		232
47-217522		90
47-217522		117
47-218871		582
48-080347	GM5-8034	96
48-080347	GM5-8034	97
48-080347	GM5-8034	99
48-080347	GM5-8034	100
48-080347	GM5-8034	101
48-080408	GM5-8040	97
48-080422	GM5-8042	16
48-080422	GM5-8042	66
48-080422	GM5-8042	68
48-080422	GM5-8042	554
48-080422	GM5-8042	667
48-080422	GM5-8042	682
48-080422	GM5-8042	701
48-080453	GM5-8045	228
48-080460	GM5-8046	227
48-080460	GM5-8046	228
48-080484	GM5-8048	66
48-080484	GM5-8048	68
48-080484	GM5-8048	554
48-080569	S03-8056	671
48-080569	S03-8056	675
48-080569	S03-8056	677
48-080569	S03-8056	679
48-080569	S03-8056	684
48-080569	S03-8056	696
48-080569	S03-8056	737
48-080651	GM5-8065	16
48-080651	GM5-8065	554
48-080651	GM5-8065	560
48-080651	GM5-8065	667
48-080651	GM5-8065	682
48-080651	GM5-8065	701
48-080736	GM5-8073	543
48-080736	GM5-8073	544
48-080736	GM5-8073	545
48-080736	GM5-8073	549
48-080736	GM5-8073	723
48-080750	*GM5-8075*	*403*
48-080767	GM5-8076	145
48-080767	GM5-8076	147
48-080767	GM5-8076	154
48-080767	GM5-8076	260
48-080767	GM5-8076	261
48-080767	GM5-8076	428
48-080767	GM5-8076	429
48-080767	GM5-8076	430
48-080767	GM5-8076	431
48-080767	GM5-8076	456
48-080767	GM5-8076	627
48-080767	GM5-8076	628
48-080767	GM5-8076	634
48-080767	GM5-8076	635
48-080767	GM5-8076	639
48-081894	GM5-8189	545
48-081894	GM5-8189	546
48-081894	GM5-8189	550
48-081894	GM5-8189	725
48-086035	GM5-8603	577
48-086059	GM5-8605	28
48-086059	GM5-8605	32
48-086097	GM5-8609	311
48-086103	GM5-8610	28
48-086103	GM5-8610	32
48-086165	GM5-8616	28
48-086165	GM5-8616	32
48-086202	*GM5-8620*	*577*
48-086202	*GM5-8620*	*578*
48-086424	GM5-8642	384
48-086424	GM5-8642	385
48-088428	*GM5-8842*	*266*
48-088428	*GM5-8842*	*267*
48-088435	*GM5-8843*	*104*
48-088459	GM5-8845	97
48-088459	GM5-8845	99
48-088459	GM5-8845	100
48-088473	GM5-8847	508
48-088602	GM5-8860	322
48-088602	GM5-8860	323
48-088602	GM5-8860	325
48-088602	GM5-8860	326
48-088602	GM5-8860	332
48-088602	GM5-8860	333
48-088657	GM5-8865	276
48-088688	GM5-8868	57
48-088688	GM5-8868	59
48-088688	GM5-8868	709
48-088688	GM5-8868	711
48-088688	GM5-8868	713
48-088688	GM5-8868	715
48-088749	GM5-8874	57
48-088749	GM5-8874	59
48-088749	GM5-8874	86
48-088749	GM5-8874	573
48-088749	GM5-8874	709
48-088749	GM5-8874	711
48-088749	GM5-8874	713
48-088749	GM5-8874	715
48-088756	GM5-8875	596
48-088756	GM5-8875	597
48-088756	GM5-8875	598
48-088763	GM5-8876	333
48-088763	GM5-8876	348
48-100724	GM5-A072	4
48-100724	GM5-A072	6
48-100724	GM5-A072	10
48-103398	GM5-A339	577
48-103398	GM5-A339	578
48-104555	GM5-A455	125
48-104692	GM5-A469	125
48-104739	GM5-A473	138
48-105958	GM5-A595	35
48-105958	GM5-A595	38
48-105958	GM5-A595	40
48-105958	GM5-A595	44
48-105958	GM5-A595	47
48-108041	*GM5-A804*	*278*
48-110297	GM5-B029	312
48-115575	GM5-B557	503
48-115575	GM5-B557	505
48-115674	GM5-B567	97
48-115674	GM5-B567	99
48-115674	GM5-B567	100
48-115766	GM5-B576	97
48-115766	GM5-B576	99
48-115766	GM5-B576	100
48-116077	GM5-B607	357
48-116541	GM5-B654	61
48-116541	GM5-B654	62
48-116541	GM5-B654	86
48-118804	GM5-B880	272
48-119542	GM5-B954	161
48-119542	GM5-B954	162
48-119542	GM5-B954	356
48-121262	GM5-C126	230
48-121262	GM5-C126	231
48-121262	GM5-C126	250
48-121262	GM5-C126	251
48-121262	GM5-C126	303
48-121262	GM5-C126	304
48-121262	GM5-C126	313
48-121262	GM5-C126	650
48-121262	GM5-C126	652
48-121262	GM5-C126	664
48-121897	GM5-C189	509
48-121897	GM5-C189	510
48-123525	GM5-C352	577
48-123525	GM5-C352	578
48-123952	GM5-C395	130
48-123952	GM5-C395	131
48-126380	GM5-C638	103
48-126380	GM5-C638	105
48-126380	GM5-C638	107
48-126380	GM5-C638	108
48-126380	GM5-C638	141
48-126687	GM5-C668	105
48-126687	GM5-C668	107
48-131636	GM5-D163	89
48-131636	GM5-D163	90
48-131636	GM5-D163	111
48-131636	GM5-D163	113
48-131636	GM5-D163	114
48-131636	GM5-D163	116
48-131636	GM5-D163	142
48-131841	GM5-D184	311
48-132626	GM5-D262	500
48-132633	GM5-D263	499
48-132633	GM5-D263	500
48-132688	GM5-D268	500
48-132688	GM5-D268	501
48-135238	GM5-D523	20
48-135238	GM5-D523	23
48-135238	GM5-D523	540
48-135238	GM5-D523	541
48-135238	GM5-D523	556
48-135238	GM5-D523	561
48-135238	GM5-D523	569
48-135238	GM5-D523	571
48-135238	GM5-D523	687
48-135238	GM5-D523	689
48-135238	GM5-D523	691
48-135238	GM5-D523	694
48-135238	GM5-D523	697
48-135238	GM5-D523	698
48-135245	GM5-D524	20
48-135245	GM5-D524	23
48-135245	GM5-D524	24
48-135245	GM5-D524	540
48-135245	GM5-D524	541
48-135245	GM5-D524	556
48-135245	GM5-D524	561
48-135245	GM5-D524	569
48-135245	GM5-D524	571
48-135245	GM5-D524	573
48-135245	GM5-D524	574
48-135245	GM5-D524	687
48-135245	GM5-D524	689
48-135245	GM5-D524	691
48-135245	GM5-D524	692
48-135245	GM5-D524	695
48-135245	GM5-D524	697
48-135245	GM5-D524	698
48-135245	GM5-D524	717
48-135245	GM5-D524	718
48-135245	GM5-D524	719
48-135245	GM5-D524	720
48-135245	GM5-D524	734
48-135344	GM5-D534	501
48-135344	GM5-D534	502
48-135344	GM5-D534	503
48-135351	GM5-D535	501
48-135351	GM5-D535	502
48-135368	GM5-D536	502
48-135498	GM5-D549	129
48-135498	GM5-D549	143
48-135887	GM5-D588	504
48-135887	GM5-D588	505
48-135887	GM5-D588	506
48-136013	GM5-D601	504
48-136013	GM5-D601	505
48-136013	GM5-D601	506
48-136648	GM5-D664	373
48-136648	GM5-D664	374
48-136723	GM5-D672	297
48-136723	GM5-D672	455
48-136723	GM5-D672	638
48-136723	GM5-D672	648
48-137539	GM5-D753	500
48-138864	GM5-D886	68
48-138864	GM5-D886	69
48-139137	GM5-D913	672
48-139243	GM5-D924	7
48-139243	GM5-D924	8
48-139243	GM5-D924	9
48-139243	GM5-D924	12

New order number – Old order number

New	Old	Page
48-141147	GM5-E114	328
48-141147	GM5-E114	330
48-141147	GM5-E114	351
48-141635	GM5-E163	138
48-145459	GM5-E545	504
48-145701	GM5-E570	89
48-145701	GM5-E570	111
48-145701	GM5-E570	115
48-145701	GM5-E570	116
48-146142	GM5-E614	391
48-146852	GM5-E685	546
48-146852	GM5-E685	551
48-146852	GM5-E685	562
48-146852	GM5-E685	563
48-146852	GM5-E685	726
48-146852	GM5-E685	727
48-147231	GM5-E723	48
48-147231	GM5-E723	49
48-147231	GM5-E723	50
48-147231	GM5-E723	51
48-147231	GM5-E723	52
48-147231	GM5-E723	85
48-153690	GR5-F369	65
48-153720	GM5-F372	375
48-153720	GM5-F372	376
48-153720	GM5-F372	377
48-153720	GM5-F372	378
48-155830	GM5-F583	578
48-156745	GM5-F674	690
48-158176	GM5-F817	690
48-158176	GM5-F817	731
48-165815	GM5-G581	280
48-165815	GM5-G581	391
48-166560	GM5-G656	350
48-168229	GM5-G822	14
48-168229	GM5-G822	15
48-168229	GM5-G822	551
48-168229	GM5-G822	552
48-168229	GM5-G822	728
48-169301	GM5-G930	35
48-169301	GM5-G930	38
48-169301	GM5-G930	40
48-169301	GM5-G930	44
48-169301	GM5-G930	47
48-169301	GM5-G930	84
48-169301	GM5-G930	547
48-169301	GM5-G930	548
48-169998	GM5-G999	139
48-177580	GM5-H758	128
48-177580	GM5-H758	143
48-181440	GM5-H606	508
48-191845		152
48-195232		89
48-195232		90
48-195232		111
48-195232		113
48-195232		115
48-195232		116
48-197441		334
48-213660		106
48-215855		97
48-215855		99
48-215909		20
48-215909		24
48-215909		556
48-215909		569
48-215909		571
48-215909		573
48-215909		574
48-215909		687
48-215909		690
48-215909		691
48-215909		697
48-215909		698
48-215909		732
48-216036		506
48-216036		507
48-217170		91
48-217170		117
48-218412		504
48-221832		63
48-222983		152
48-223539		89
48-223539		111
48-223539		115
48-223539		116
48-223867		509
49-115604	GA5-B560	504
49-115604	GA5-B560	505
49-122046	GA5-C204	509
49-122046	GA5-C204	510
49-131543	GA5-D154	89
49-131543	GA5-D154	90
49-131543	GA5-D154	111
49-131543	GA5-D154	113
49-131543	GA5-D154	115
49-131543	GA5-D154	116
49-131543	GA5-D154	142
49-132380	GA5-D238	333
49-132380	GA5-D238	348
49-135121	GA5-D512	103
49-135121	GA5-D512	106
49-135121	GA5-D512	107
49-135121	GA5-D512	108
49-135121	GA5-D512	141
49-135169	GA5-D516	129
49-135169	GA5-D516	143
49-135817	GA5-D581	504
49-135817	GA5-D581	505
49-135817	GA5-D581	506
49-135985	GA5-D598	504
49-135985	GA5-D598	505
49-135985	GA5-D598	506
49-145489	GA5-E548	504
49-151282	GA5-F128	48
49-151282	GA5-F128	49
49-151282	GA5-F128	50
49-151282	GA5-F128	51
49-151282	GA5-F128	52
49-151282	GA5-F128	85
49-196849		20
49-196849		24
49-196849		540
49-196849		556
49-196849		561
49-196849		569
49-196849		571
49-196849		573
49-196849		687
49-196849		689
49-196849		690
49-196849		692
49-196849		695
49-196849		697
49-196849		698
49-196849		717
49-196849		718
49-196849		719
49-196849		720
49-196849		731
49-196849		734
49-216042		506
49-216042		507
49-223873		509
49-224658		91
49-224658		117
50-174546	ACO-H454	109

New in the range 2012

Order-No.	Type
12-116669	B1
12-116867	B1
12-117024	B1
12-117048	B1
12-117772	B1
12-117796	B1
12-117802	B1
12-117819	B1
12-117864	B1
12-117932	B1
12-224036	B1
12-224074	B1
12-224081	B1
12-224098	B1
12-224104	B1
12-224111	B1
12-224128	B1
12-224135	B1
12-224142	B1
12-224159	B1
12-224166	B1
12-224173	B1
12-224180	B1
12-224197	B1
12-224203	B1
12-224210	B1
12-224227	B1
12-224234	B1
12-224241	B1
12-224258	B1
12-224265	B1
12-224272	B1
12-224289	B1
12-224296	B1
12-224302	B1
12-224319	B1
12-224326	B1
12-224333	B1
12-224340	B1
12-224357	B1
12-224364	B1
12-224371	B1
12-224388	B1
12-224395	B1
12-224401	B1
12-224418	B1
12-224425	B1
12-224432	B1
12-224449	B1
12-224456	B1
12-224463	B1
12-224470	B1
12-224487	B1
12-224623	B1
12-225323	B1
12-225347	B1
12-225354	B1
12-225385	B1
12-225828	B1
12-225835	B1
12-225842	B1
12-226344	B1
12-226351	B1
12-226368	B1
12-226399	B1
12-226405	B1
12-226412	B1
12-226429	B1
12-226436	B1
12-226443	B1
12-226450	B1
12-226467	B1
12-226481	B1
12-226504	B1
12-226528	B1
12-226535	B1
12-226542	B1
12-226559	B1
12-226580	B1
19-183398	B4
19-193441	B4
19-194875	B4
19-194882	B4
19-194899	B4
19-195322	B4
19-195339	B4
19-195346	B4
19-195353	B4
19-196862	B4
19-197135	B4
19-197210	B4
19-197227	B4
19-197692	B4
19-197791	B4
19-199511	B4
19-212647	B4
19-212722	B4
19-213156	B4
19-213729	B4
19-213736	B4

Order-No.	Type
19-213767	B4
19-213798	B4
19-213828	B4
19-213859	B4
19-214108	B4
19-214221	B4
19-214252	B4
19-214269	B4
19-214276	B4
19-214405	B4
19-214481	B4
19-214498	B4
19-214634	B4
19-214641	B4
19-214658	B4
19-215693	B4
19-215976	B4
19-215983	B4
19-215990	B4
19-216003	B4
19-216942	B4
19-216966	B4
19-216973	B4
19-216980	B4
19-217000	B4
19-217154	B4
19-217161	B4
19-217468	B4
19-217994	B4
19-218014	B4
19-218458	B4
19-218939	B4
19-219189	B4
19-220079	B4
19-220093	B4
19-220598	B4
19-220970	B4
19-221519	B4
19-223025	B4
19-223322	B4
19-226651	B4
20-146078	B4-DTC
20-146085	B4-DTC
20-146092	B4-DTC
21-216381	B4
22-183415	B4
22-193421	B4
22-193438	B4
22-195241	B4
22-195258	B4
22-195302	B4
22-195319	B4
22-196408	B4
22-196415	B4
22-196606	B4
22-196682	B4
22-196743	B4
22-196750	B4
22-196859	B4
22-196934	B4
22-196941	B4
22-196958	B4
22-196965	B4
22-197320	B6-Sport
22-197337	B8
22-197672	B4
22-197689	B4
22-197849	B4
22-199492	B4
22-199508	B4
22-212696	B4
22-212986	B4
22-212993	B4
22-213136	B4
22-213143	B4
22-213686	B4
22-213693	B4
22-213709	B4
22-213716	B4
22-213747	B4
22-213754	B4
22-213778	B4
22-213785	B4
22-213808	B4
22-213815	B4
22-213839	B4
22-213846	B4
22-213945	B4
22-213952	B4
22-214089	B4
22-214096	B4
22-214287	B4
22-214294	B4
22-214751	B4
22-214768	B4
22-214775	B4
22-214782	B4
22-215482	B4
22-215505	B4
22-215734	B4

Order-No.	Type
22-215840	B4
22-215895	B4
22-215949	B4
22-216540	B4
22-216557	B4
22-217134	B4
22-217141	B4
22-217271	B4
22-217714	B4
22-217721	B4
22-217981	B4
22-218001	B4
22-218230	B4
22-218469	B6-Sport
22-218506	B4
22-218513	B4
22-218537	B4
22-218858	B4
22-218865	B4
22-218919	B4
22-218926	B4
22-219947	B4
22-220066	B4
22-220080	B4
22-220103	B4
22-220127	B4
22-220530	B4
22-220547	B4
22-220578	B4
22-220585	B4
22-221490	B4
22-222121	B6-Sport
22-222138	B6-Sport
22-223456	B4
22-223463	B4
22-223616	B4
22-223951	B4
22-224668	B4
22-225269	B4
22-225290	B4
22-225306	B4
22-226556	B4
22-226563	B6-Sport
22-226570	B8
23-218482	B6-DTC
23-219960	B4-DTC
23-219984	B4-DTC
24-103336	B6-Sport
24-103350	B6-Sport
24-184724	B6-Sport
24-184731	B6-Sport
24-184748	B6-Sport
24-184755	B6-Sport
24-185233	B6-Offrd
24-185240	B6-Offrd
24-185967	B6-Offrd
24-186162	B6-Offrd
24-186179	B6-Offrd
24-186797	B6-Offrd
24-186803	B6-Offrd
24-193221	B4-DTC
24-193238	B4-DTC
24-193245	B4-DTC
24-195690	B6-Sport
24-195706	B6-Sport
24-196529	B6-Sport
24-196550	B8
24-196901	B4
24-197656	5100-Series
24-203012	B4
24-203029	B4
24-214230	B6-Sport
24-215220	B6-Sport
24-215237	B8
24-217552	B4
24-217859	B6-Sport
24-217873	B8
24-218245	B4
24-218474	B6-Sport
24-219952	B4
24-220118	B4
24-221726	B6-Sport
24-222143	B6-Sport
24-222181	B6-Sport
24-222198	B6-Sport
24-223706	MS
24-224000	B6-Sport
24-224024	MS
26-203034	B4-ACD
26-203041	B4-ACD
26-203058	B4-DTC
26-203065	B4-DTC
26-203072	B4-DTC
26-203089	B4-DTC
26-218496	B6-DTC
26-219974	B4-DTC
26-219998	B4-DTC
26-220048	B4-AMC
26-220055	B4-AMC
26-224572	B6-DTC

Order-No.	Type
27-219935	B4-AMC
28-214212	B6-Sport
29-196500	B6-Sport
29-196517	B6-Sport
29-196531	B8
29-196548	B8
31-224550	B6-DTC
31-224567	B6-DTC
33-185859	B6-Offrd
35-044062	MS
35-212676	B6-Sport
35-217480	B6-Sport
35-217862	B8
35-221715	B6-Sport
35-223276	B6-Sport
35-223283	B6-Sport
35-223290	B8
35-223306	B8
35-223993	B6-Sport
35-224013	B6-Sport
36-195442	B3
36-195459	B3
36-195473	B3
36-195534	B3
36-195565	B3
36-195589	B3
36-195596	B3
36-195602	B3
36-195619	B3
36-195633	B3
36-195640	B3
36-195657	B3
36-195664	B3
36-195688	B3
36-195718	B3
36-195749	B3
36-195756	B3
36-195787	B3
36-195794	B3
36-196142	B3
36-196166	B3
36-196173	B3
36-197507	B3
36-198153	B3
36-198184	B3
36-198191	B3
36-198221	B3
36-198245	B3
36-198252	B3
36-198269	B3
36-198276	B3
36-198313	B3
36-198320	B3
36-198337	B3
36-198344	B3
36-198368	B3
36-198375	B3
36-199358	B3
36-199365	B3
36-199372	B3
36-199389	B3
36-199761	B3
36-199921	B3
36-199938	B3
36-199952	B3
36-199969	B3
36-199976	B3
36-200016	B3
36-200047	B3
36-200054	B3
36-200061	B3
36-200078	B3
36-200085	B3
36-200191	B3
36-200207	B3
36-200238	B3
36-200252	B3
36-200276	B3
36-200283	B3
36-200306	B3
36-200337	B3
36-200351	B3
36-200405	B3
36-200412	B3
36-200443	B3
36-200450	B3
36-200504	B3
36-200511	B3
36-200528	B3
36-200542	B3
36-200566	B3
36-200573	B3
36-200580	B3
36-200627	B3
36-200641	B3
36-200658	B3
36-200672	B3
36-200702	B3
36-200726	B3
36-200856	B3

Order-No.	Type
36-200863	B3
36-200870	B3
36-200894	B3
36-200900	B3
36-200917	B3
36-200924	B3
36-200931	B3
36-200948	B3
36-200986	B3
36-201006	B3
36-201013	B3
36-201020	B3
36-201037	B3
36-201044	B3
36-201068	B3
36-201075	B3
36-201082	B3
36-201099	B3
36-201105	B3
36-201112	B3
36-201136	B3
36-201143	B3
36-201150	B3
36-201167	B3
36-201174	B3
36-201181	B3
36-201204	B3
36-201211	B3
36-201228	B3
36-201259	B3
36-201266	B3
36-201280	B3
36-201402	B3
36-201419	B3
36-201426	B3
36-201433	B3
36-201440	B3
36-201464	B3
36-201471	B3
36-201488	B3
36-201495	B3
36-201501	B3
36-201518	B3
36-201525	B3
36-201532	B3
36-201549	B3
36-201556	B3
36-201563	B3
36-201587	B3
36-201594	B3
36-201600	B3
36-201648	B3
36-201662	B3
36-201679	B3
36-201686	B3
36-201730	B3
36-201747	B3
36-201761	B3
36-201785	B3
36-201792	B3
36-201808	B3
36-201815	B3
36-201822	B3
36-201846	B3
36-201877	B3
36-202126	B3
36-202157	B3
36-202164	B3
36-202171	B3
36-202188	B3
36-202201	B3
36-202287	B3
36-202584	B3
36-202683	B3
36-202690	B3
36-202706	B3
36-202713	B3
36-202737	B3
36-202744	B3
36-202751	B3
36-202768	B3
36-202782	B3
36-202843	B3
36-202874	B3
36-202928	B3
36-202935	B3
36-211272	B3
36-211593	B3
36-211968	B3
36-212484	B3
36-212491	B3
36-212514	B3
36-212538	B3
36-212545	B3
36-212552	B3
36-212569	B3
36-212583	B3
36-212590	B3
36-212910	B3
36-213016	B3

New in the range 2012

Order-No.	Type
36-213023	B3
36-213030	B3
36-213177	B3
36-213184	B3
36-213191	B3
36-213207	B3
36-213214	B3
36-213221	B3
36-213238	B3
36-213245	B3
36-213252	B3
36-213269	B3
36-213276	B3
36-213290	B3
36-213306	B3
36-213450	B3
36-213467	B3
36-213474	B3
36-213542	B3
36-213559	B3
36-213566	B3
36-213672	B3
36-213931	B3
36-213962	B3
36-214334	B3
36-214426	B3
36-214433	B3
36-214457	B3
36-214464	B3
36-214471	B3
36-214501	B3
36-214518	B3
36-214525	B3
36-214532	B3
36-214549	B3
36-214556	B3
36-214563	B3
36-214570	B3
36-214594	B3
36-214792	B3
36-214808	B3
36-214815	B3
36-214839	B3
36-214846	B3
36-214853	B3
36-214860	B3
36-214884	B3
36-214891	B3
36-214907	B3
36-214914	B3
36-214921	B3
36-214938	B3
36-214945	B3
36-214952	B3
36-214969	B3
36-214976	B3
36-214983	B3
36-214990	B3
36-215003	B3
36-215010	B3
36-215027	B3
36-215034	B3
36-215041	B3
36-215058	B3
36-215065	B3
36-215096	B3
36-215102	B3
36-215119	B3
36-215126	B3
36-215133	B3
36-215140	B3
36-215171	B3
36-215188	B3
36-215195	B3
36-215201	B3
36-215218	B3
36-215249	B3
36-215256	B3
36-215270	B3
36-215287	B3
36-215300	B3
36-215324	B3
36-215331	B3
36-215348	B3
36-215379	B3
36-215386	B3
36-215393	B3
36-215409	B3
36-215416	B3
36-215423	B3
36-215430	B3
36-215447	B3
36-215515	B3
36-215522	B3
36-215539	B3
36-215546	B3
36-215638	B3
36-215645	B3
36-215652	B3
36-215669	B3

Order-No.	Type
36-215676	B3
36-215744	B3
36-215751	B3
36-215768	B3
36-215775	B3
36-215782	B3
36-215898	B3
36-215911	B3
36-215959	B3
36-215966	B3
36-216093	B3
36-216109	B3
36-216116	B3
36-216123	B3
36-216130	B3
36-216147	B3
36-216154	B3
36-216161	B3
36-216178	B3
36-216192	B3
36-216208	B3
36-216215	B3
36-216222	B3
36-216239	B3
36-216246	B3
36-216260	B3
36-216277	B3
36-216284	B3
36-216291	B3
36-216307	B3
36-216314	B3
36-216321	B3
36-216338	B3
36-216345	B3
36-216369	B3
36-216376	B3
36-216390	B3
36-216406	B3
36-216413	B3
36-216420	B3
36-216437	B3
36-216444	B3
36-216468	B3
36-216475	B3
36-216581	B3
36-216598	B3
36-216604	B3
36-216611	B3
36-216628	B3
36-216635	B3
36-216642	B3
36-216659	B3
36-216666	B3
36-216673	B3
36-216680	B3
36-216697	B3
36-216703	B3
36-216710	B3
36-216727	B3
36-216734	B3
36-216741	B3
36-216758	B3
36-216765	B3
36-216772	B3
36-216789	B3
36-216796	B3
36-216802	B3
36-216819	B3
36-216826	B3
36-216833	B3
36-216840	B3
36-216857	B3
36-216864	B3
36-216871	B3
36-216888	B3
36-217014	B3
36-217021	B3
36-217038	B3
36-217045	B3
36-217052	B3
36-217069	B3
36-217076	B3
36-217083	B3
36-217090	B3
36-217106	B3
36-217113	B3
36-217120	B3
36-217168	B3
36-217205	B3
36-217212	B3
36-217229	B3
36-217236	B3
36-217243	B3
36-217250	B3
36-217267	B3
36-217281	B3
36-217298	B3
36-217304	B3
36-217311	B3
36-217328	B3

Order-No.	Type
36-217335	B3
36-217342	B3
36-217359	B3
36-217366	B3
36-217373	B3
36-217380	B3
36-217397	B3
36-217403	B3
36-217410	B3
36-217427	B3
36-217434	B3
36-217472	B3
36-217496	B3
36-217502	B3
36-217519	B3
36-217533	B3
36-217540	B3
36-217564	B3
36-217571	B3
36-217588	B3
36-217595	B3
36-217601	B3
36-217618	B3
36-217625	B3
36-217632	B3
36-217649	B3
36-217847	B3
36-217939	B3
36-218080	B3
36-218097	B3
36-218110	B3
36-218127	B3
36-218134	B3
36-218141	B3
36-218158	B3
36-218165	B3
36-218219	B3
36-218226	B3
36-218295	B3
36-218301	B3
36-218318	B3
36-218349	B3
36-218547	B3
36-218554	B3
36-218585	B3
36-218776	B3
36-218783	B3
36-218790	B3
36-218806	B3
36-218813	B3
36-218820	B3
36-218837	B3
36-218844	B3
36-218943	B3
36-218950	B3
36-218967	B3
36-218974	B3
36-218981	B3
36-218998	B3
36-219001	B3
36-219018	B3
36-219025	B3
36-219032	B3
36-219049	B3
36-219056	B3
36-219063	B3
36-219148	B3
36-219162	B3
36-219179	B3
36-219193	B3
36-219209	B3
36-219230	B3
36-219247	B3
36-219254	B3
36-219261	B3
36-219278	B3
36-219285	B3
36-219292	B3
36-219308	B3
36-219315	B3
36-219322	B3
36-219322	B3
36-219339	B3
36-219346	B3
36-219353	B3
36-219360	B3
36-219377	B3
36-219384	B3
36-219391	B3
36-219407	B3
36-219414	B3
36-219421	B3
36-219438	B3
36-219445	B3
36-219452	B3
36-219476	B3
36-219506	B3
36-219513	B3
36-219520	B3
36-219537	B3

Order-No.	Type
36-219544	B3
36-219551	B3
36-219568	B3
36-219575	B3
36-219605	B3
36-219612	B3
36-219636	B3
36-219643	B3
36-219650	B3
36-219667	B3
36-219674	B3
36-219681	B3
36-219698	B3
36-219704	B3
36-219711	B3
36-219728	B3
36-219735	B3
36-219742	B3
36-219759	B3
36-219766	B3
36-219773	B3
36-219780	B3
36-219797	B3
36-219803	B3
36-219810	B3
36-219841	B3
36-219858	B3
36-219865	B3
36-219872	B3
36-219902	B3
36-220601	B3
36-221158	B3
36-221165	B3
36-222438	B3
36-222445	B3
36-223046	B3
36-223053	B3
36-223060	B3
36-224067	B3
36-224098	B3
36-225378	B3
36-226764	B3
36-300037	B3
36-300044	B3
37-000806	B3
37-148485	B3
38-120008	B3
38-163067	B3
38-222412	B3
38-225819	B3
39-203359	B3-BF
39-207999	B3-BF
39-208002	B3-BF
39-208033	B3-BF
39-208040	B3-BF
39-208064	B3-BF
39-208071	B3-BF
39-208088	B3-BF
39-208149	B3-BF
39-208187	B3-BF
39-208194	B3-BF
39-208200	B3-BF
39-208217	B3-BF
39-208224	B3-BF
39-208231	B3-BF
39-208248	B3-BF
39-208255	B3-BF
39-208262	B3-BF
39-208279	B3
39-208286	B3-BF
39-208293	B3-BF
39-208316	B3
39-208347	B3-BF
39-208361	B3-BF
39-208378	B3-BF
39-208385	B3-BF
39-208392	B3-BF
39-208408	B3-BF
39-208897	B3
39-208903	B3-BF
46-184030	B12-PK
46-188076	B12-SL
46-192790	B12-PK
46-223500	B12-PK
46-223609	B12-PK
46-223661	B12-PK
46-223678	B12-PK
47-196568	B14
47-217522	B14
47-218871	B14
48-136648	B16-PSS10
48-213660	B16-BCS
48-215855	B16-BCS
48-215909	B16-BCS
48-216036	B16-PSS10
48-217170	B16-PSS10
48-218412	B16-BCS
48-221832	B16-PSS10
48-222983	B16-PSS10
48-223539	B16-BCS

Order-No.	Type
48-223867	B16-PSS10
49-216042	B16-DTC
49-223873	B16-DTC
49-224658	B16-RC

Obsolete range 2012

Obsoleted	replaced by Order-No.
15-064684	19-064666
15-108418	
17-053327	
19-019253	
19-019260	
19-019383	
19-019499	
19-019581	
19-019857	
19-020082	
19-028729	
19-062938	
19-063416	19-061283
19-063430	
19-063492	
19-063553	
19-065229	
19-065250	
19-118628	19-223025
19-156378	19-219158
21-031403	
22-002525	
22-040152	22-193360
22-040237	35-043911
22-040343	22-205438
22-040787	
22-040800	
22-040817	
22-040824	
22-040831	
22-040848	
22-040978	
22-040985	
22-041098	
22-041203	
22-041227	22-045010
22-047229	
22-047236	
22-047243	
22-047250	
22-047267	
22-047274	
22-047434	
22-047458	
22-047465	
22-047496	
22-047502	
22-047526	
22-047618	
22-047694	
22-047700	
22-047717	
22-047779	
22-047793	
22-047984	
22-047991	
22-048042	
22-048059	
22-048080	
22-048097	
22-048158	
22-048165	
22-048301	
22-048370	
22-048738	
22-048745	
22-048752	
22-048783	
22-048790	
22-048806	
22-048813	
22-048868	
22-048875	
22-048905	
22-048929	
22-048943	
22-048950	
22-048981	
22-048998	
22-049117	
22-049131	
22-049193	
22-049223	
22-049278	
22-049292	
22-049346	
22-049520	
22-049537	
22-049568	
22-049575	
22-049629	
22-052551	22-196606
22-052919	
22-120335	22-153746
22-123404	22-214768
22-123411	22-214751
22-153739	22-215734
22-153760	22-215796
22-153777	22-215802
22-153784	22-215840
22-153791	22-215833
22-168368	22-215482
22-168375	22-215505
24-007702	
24-010634	
24-011921	
24-012614	
24-013291	
24-013383	
24-013390	
24-014762	24-021586
24-014830	
24-014878	
24-015325	
24-016759	
24-017756	
24-017770	
24-019002	
24-019125	24-214230
24-020565	24-020541
24-021067	
24-022064	24-002431
24-023627	
24-024259	24-024211
24-046305	24-000642
24-110808	24-215220
24-110815	24-215237
24-113823	24-196529
24-113830	24-196550
24-125130	
24-202947	24-178488
24-202954	24-178495
24-202978	24-178501
24-202985	24-178518
34-001387	34-003343
34-003329	34-001363
34-003480	
34-050392	
35-003762	
35-042006	
35-043867	22-197931
35-101697	
36-133871	
36-134168	36-131105
36-134205	
36-134274	
36-134304	
36-134533	
36-154838	
36-154920	
36-154937	
36-155026	
36-155149	37-131425
36-159079	36-215348
36-159277	
36-159338	
36-159666	
36-159703	
36-159727	
36-159772	
36-159857	
36-159871	
36-160020	
36-160259	
36-160365	
36-160457	
36-160662	
36-160709	
36-160761	
36-160808	
36-160853	
36-160877	
36-161089	
36-161102	
36-161140	
36-161201	
36-161478	
36-161492	
36-161508	
36-161546	
36-161577	
36-161584	
36-161621	
36-161645	
36-161683	
36-161706	
36-161737	
36-161744	
36-161751	
36-161775	
36-161959	
36-161966	
36-162291	
36-162314	
36-162321	
36-162406	
36-162413	
36-162420	
36-162437	
36-162444	
36-162482	
36-162529	
36-162543	
36-162789	
36-162802	
36-162819	
36-162826	
36-162833	
36-162956	
36-162970	
36-162994	
36-163175	
36-163267	
36-163397	
36-164028	
36-164349	
36-195831	37-131388
36-195862	37-131364
36-199778	36-199808
36-199792	36-199808
36-200122	36-200030
36-200221	36-202676
36-200474	36-200245
36-200603	36-200160
36-201716	36-129799
36-201778	37-131425
36-201839	37-134129
36-202836	
36-202898	36-159147
36-203369	36-160389
37-131036	37-131333
37-147723	37-133030
37-148232	36-202287
37-155162	37-134211
37-160197	37-134211
38-148217	38-163067
38-154492	36-224067
38-161162	38-130359
38-163463	
46-181695	
46-189561	
46-190161	
46-190185	
46-191458	
46-193612	
46-193629	
46-195135	46-195111
47-086777	
48-100687	48-136648
48-123211	

Protection Kits

Protection Kit > Order-No.

Protection Kit	Order-Nr.	Location
11-101291	22-224668	V
11-101291	21-030338	V
11-101291	21-030468	V
11-101291	21-030550	V
11-101291	21-031502	V
11-101291	16-031340	V
11-101291	16-031456	V
11-101291	35-003663	V
11-101291	22-181657	V
11-101291	22-003737	V
11-101291	22-004062	V
11-101291	22-040237	V
11-101291	22-040589	V
11-101291	22-041364	V
11-101291	22-041371	V
11-101291	35-043911	V
11-101291	22-043085	V
11-101291	22-043092	V
11-101291	22-041142	V
11-101291	22-041180	V
11-101291	22-041227	V
11-101291	22-041234	V
11-101291	22-045010	V
11-101291	22-045027	V
11-101291	22-045768	V
11-101291	17-047142	V
11-101291	17-047166	V
11-101291	17-104029	V
11-101291	17-105248	V
11-101291	17-107150	V
11-101307	22-224668	V
11-101307	21-030338	V
11-101307	21-030406	V
11-101307	21-030444	V
11-101307	16-031296	V
11-101307	16-031319	V
11-101307	22-041364	V
11-101307	22-041371	V
11-101307	22-040978	V
11-101307	22-044761	V
11-101307	17-104029	V
11-101307	17-106405	V
11-101314	22-193360	V
11-101314	21-030413	V
11-101314	21-030437	V
11-101314	21-030529	V
11-101314	16-031302	V
11-101314	16-031333	V
11-101314	16-031548	V
11-101314	22-040909	V
11-101314	22-045799	V
11-101314	17-104104	V
11-101321	22-196309	V
11-101321	21-030246	V
11-101321	21-030253	V
11-101321	21-030499	V
11-101321	21-030505	V
11-101321	21-030512	V
11-101321	21-031182	V
11-101321	21-031199	V
11-101321	16-031326	V
11-101321	16-101920	V
11-101321	22-040879	V
11-101321	22-041210	V
11-101321	22-105813	V
11-101338	22-040770	V
11-101338	22-040855	V
11-101338	22-040886	V
11-101338	22-040893	V
11-101338	22-040930	V
11-101338	22-041135	V
11-101338	22-041159	V
11-101338	22-041173	V
11-101338	22-045546	V
11-101338	22-045553	V
11-101338	17-053273	V
11-101345	24-008372	H
11-101345	24-015141	H
11-101345	19-019550	H
11-101345	19-019680	H
11-101345	19-019802	H
11-101352	24-000307	H
11-101352	24-014175	H
11-101352	24-015042	H
11-101352	24-015240	H
11-101352	24-015295	H
11-101352	24-015530	H
11-101352	24-015974	H
11-101352	24-021197	H
11-101352	24-021227	H
11-101352	24-026017	H
11-101352	24-026192	H
11-101352	24-026208	H
11-101352	19-019659	H
11-101352	19-019741	H
11-101352	19-019932	H
11-101352	19-019949	H
11-101352	19-019963	H
11-101352	19-028651	H
11-101352	19-028668	H

Protection Kit	Order-Nr.	Location
11-101352	19-029405	H
11-101352	19-029412	H
11-101352	19-124681	H
11-101352	15-062192	H
11-101352	15-062208	H
11-101352	15-069122	H
11-101352	15-105257	H
11-101352	15-106377	H
11-101352	22-040794	H
11-101369	21-030260	V
11-101369	21-030376	V
11-101369	16-031548	V
11-101376	21-030475	V
11-101376	22-040916	V
11-101376	22-045683	V
11-101376	22-128300	V
11-101376	17-053310	V
11-101376	17-053327	V
11-101383	22-046789	H
11-101390	24-020800	H
11-101390	24-020824	H
11-101390	24-181495	H
11-101390	24-016193	H
11-101390	24-025331	H
11-101390	24-062596	H
11-101390	19-019642	H
11-101390	19-019949	H
11-101390	19-029207	H
11-101390	19-103471	H
11-101406	22-001856	V
11-101406	22-001900	V
11-101406	22-001917	V
11-101406	22-001924	V
11-101406	22-001993	V
11-101406	22-002006	V
11-101406	22-003614	V
11-101406	22-003621	V
11-101406	22-040534	V
11-101413	19-019697	H
11-101437	22-040961	V
11-101437	22-041029	V
11-101451	19-020174	H
11-101468	22-041012	V
11-101468	22-041241	V
11-101468	22-045522	V
11-101468	22-045539	V
11-101468	22-045546	V
11-101468	22-045553	V
11-101468	22-045560	V
11-101468	22-139993	V
11-101482	22-045133	H
11-101499	22-040992	V
11-101499	22-041005	V
11-101499	22-045508	V
11-101499	22-045942	V
11-101499	22-051813	V
11-101918	21-030291	V
11-101918	21-030383	V
11-101918	22-045461	V
11-101918	22-052544	V
11-101918	22-107985	V
11-103455	22-045744	V
11-103455	22-045751	V
11-103455	22-131607	V
11-103455	22-131614	V
11-103462	24-020800	H
11-103462	24-020824	H
11-103462	24-027007	H
11-103462	24-062596	H
11-103462	19-103471	H
11-103462	19-105376	H
11-103622	21-030543	V
11-103943	21-030390	V
11-103943	16-031289	V
11-104322	24-020473	H
11-104322	24-020480	H
11-104322	19-028491	H
11-104322	15-107077	H
11-104957	22-045607	V
11-104957	22-045614	V
11-104964	22-045584	H
11-104964	22-045621	H
11-105886	19-029306	H
11-105886	19-029320	H
11-105886	19-029337	H
11-105886	19-104089	H
11-106470	19-196312	H
11-106470	24-021197	H
11-106470	24-021227	H
11-106470	24-067898	H
11-106470	24-067904	H
11-106470	19-109572	H
11-106470	19-109589	H
11-106470	19-128863	H
11-106470	15-104311	H
11-106487	19-028484	H
11-106487	15-104311	H
11-115755	24-025430	H
11-115755	24-025447	H
11-115755	24-026239	H

Protection Kit	Order-Nr.	Location
11-115755	24-026246	H
11-115755	24-028004	H
11-115755	24-028011	H
11-115755	24-064095	H
11-115755	24-064101	H
11-115755	19-029160	H
11-115755	19-029177	H
11-115755	19-029429	H
11-115755	19-068633	H
11-115755	19-140032	H
11-116141	22-045737	V
11-122449	21-030475	V
11-122456	22-031204	V
11-122456	22-044808	V
11-125358	22-215734	V
11-125358	22-215840	V
11-125358	22-153746	V
11-125358	22-153753	V
11-125358	22-153760	V
11-125358	22-153777	V
11-125358	22-153784	V
11-125358	22-153791	V
11-149828	19-067803	H
11-149828	19-109565	H
11-149835	19-029443	H
11-149835	19-111797	H
11-149835	19-111803	H
11-149835	19-140049	H
11-181415	24-015257	H
11-181415	24-015264	H
11-181415	24-026970	H
11-181415	24-026987	H
11-181415	24-067577	H
11-181415	24-068659	H
11-181415	24-068666	H
11-181415	24-027243	H
11-181415	24-027250	H
11-181415	19-215587	H
11-181415	19-103112	H
11-181415	19-103150	H
12-167616	24-166652	V

Order-No. > Protection Kit

Order-Nr.	Protection Kit	Location
15-062192	11-101352	H
15-062208	11-101352	H
15-069122	11-101352	H
15-104311	11-106470	H
15-104311	11-106487	H
15-105257	11-101352	H
15-106377	11-101352	H
15-107077	11-104322	H
16-031289	11-103943	V
16-031296	11-101307	V
16-031302	11-101314	V
16-031319	11-101307	V
16-031326	11-101321	V
16-031333	11-101314	V
16-031340	11-101291	V
16-031456	11-101291	V
16-031548	11-101314	V
16-031548	11-101369	V
16-101920	11-101321	V
17-047142	11-101291	V
17-047166	11-101291	V
17-053273	11-101338	V
17-053310	11-101376	V
17-053327	11-101376	V
17-104029	11-101291	V
17-104029	11-101307	V
17-104104	11-101314	V
17-105248	11-101291	V
17-106405	11-101307	V
17-107150	11-101291	V
19-019550	11-101345	H
19-019642	11-101390	H
19-019659	11-101352	H
19-019680	11-101345	H
19-019697	11-101413	H
19-019741	11-101352	H
19-019802	11-101345	H
19-019932	11-101352	H
19-019949	11-101352	H
19-019949	11-101390	H
19-019963	11-101352	H
19-020174	11-101451	H
19-028484	11-106487	H
19-028491	11-104322	H
19-028651	11-101352	H
19-028668	11-101352	H
19-029160	11-115755	H
19-029177	11-115755	H
19-029207	11-101390	H
19-029306	11-105886	H
19-029320	11-105886	H
19-029337	11-105886	H
19-029405	11-101352	H
19-029412	11-101352	H
19-029429	11-115755	H
19-029443	11-149835	H
19-067803	11-149828	H
19-068633	11-115755	H
19-103112	11-181415	H
19-103150	11-181415	H
19-103471	11-101390	H
19-103471	11-103462	H
19-104089	11-105886	H
19-105376	11-103462	H
19-109565	11-149828	H
19-109572	11-106470	H
19-109589	11-106470	H
19-111797	11-149835	H
19-111803	11-149835	H
19-124681	11-101352	H
19-128863	11-106470	H
19-140032	11-115755	H
19-140049	11-149835	H
19-196312	11-106470	H
19-215587	11-181415	H
21-030246	11-101321	V
21-030253	11-101321	V
21-030260	11-101369	V
21-030291	11-101918	V
21-030338	11-101291	V
21-030338	11-101307	V
21-030376	11-101369	V
21-030383	11-101918	V
21-030390	11-103943	V
21-030406	11-101307	V
21-030413	11-101314	V
21-030437	11-101314	V
21-030444	11-101307	V
21-030468	11-101291	V
21-030475	11-101376	V
21-030475	11-122449	V
21-030499	11-101321	V
21-030505	11-101321	V
21-030512	11-101321	V
21-030529	11-101314	V
21-030543	11-103622	V
21-030550	11-101291	V
21-031182	11-101321	V
21-031199	11-101321	V
21-031502	11-101291	V
22-001856	11-101406	V
22-001900	11-101406	V
22-001917	11-101406	V
22-001924	11-101406	V
22-001993	11-101406	V
22-002006	11-101406	V
22-003614	11-101406	V
22-003621	11-101406	V
22-003737	11-101291	V
22-004062	11-101291	V
22-031204	11-122456	V
22-040237	11-101291	V
22-040534	11-101406	V
22-040589	11-101291	V
22-040770	11-101338	V
22-040794	11-101352	H
22-040855	11-101338	V
22-040879	11-101321	V
22-040886	11-101338	V
22-040893	11-101338	V
22-040909	11-101314	V
22-040916	11-101376	V
22-040930	11-101338	V
22-040961	11-101437	V
22-040978	11-101307	V
22-040992	11-101499	V
22-041005	11-101499	V
22-041012	11-101468	V
22-041029	11-101437	V
22-041135	11-101338	V
22-041142	11-101291	V
22-041159	11-101338	V
22-041173	11-101338	V
22-041180	11-101291	V
22-041210	11-101321	V
22-041227	11-101291	V
22-041234	11-101291	V
22-041241	11-101468	V
22-041364	11-101291	V
22-041364	11-101307	V
22-041371	11-101291	V
22-041371	11-101307	V
22-043085	11-101291	V
22-043092	11-101291	V
22-044761	11-101307	V
22-044808	11-122456	V
22-045010	11-101291	V
22-045027	11-101291	V
22-045133	11-101482	H
22-045461	11-101918	V
22-045508	11-101499	V
22-045522	11-101468	V
22-045539	11-101468	V
22-045546	11-101338	V
22-045546	11-101468	V
22-045553	11-101338	V
22-045553	11-101468	V
22-045560	11-101468	V
22-045584	11-104964	H
22-045607	11-104957	V
22-045614	11-104957	V
22-045621	11-104964	H
22-045683	11-101376	V
22-045737	11-116141	V
22-045744	11-103455	V
22-045751	11-103455	V
22-045768	11-101291	V
22-045799	11-101314	V
22-045942	11-101499	V
22-046789	11-101383	H
22-051813	11-101499	V
22-052544	11-101918	V
22-105813	11-101321	V
22-107985	11-101918	V
22-128300	11-101376	V
22-131607	11-103455	V
22-131614	11-103455	V
22-139993	11-101468	V
22-153746	11-125358	V
22-153753	11-125358	V
22-153760	11-125358	V
22-153777	11-125358	V
22-153784	11-125358	V
22-153791	11-125358	V
22-181657	11-101291	V
22-193360	11-101314	V
22-196309	11-101321	V
22-215734	11-125358	V
22-215840	11-125358	V
22-224668	11-101291	V
22-224668	11-101307	V
24-000307	11-101352	H
24-008372	11-101345	H
24-014175	11-101352	H
24-015042	11-101352	H
24-015141	11-101345	H
24-015240	11-101352	H
24-015257	11-181415	H
24-015264	11-181415	H
24-015295	11-101352	H
24-015530	11-101352	H
24-015974	11-101352	H
24-016193	11-101390	H
24-020473	11-104322	H
24-020480	11-104322	H
24-020800	11-101390	H
24-020800	11-103462	H
24-020824	11-101390	H
24-020824	11-103462	H
24-021197	11-101352	H
24-021197	11-106470	H
24-021227	11-101352	H
24-021227	11-106470	H
24-025331	11-101390	H
24-025430	11-115755	H
24-025447	11-115755	H
24-026017	11-101352	H
24-026192	11-101352	H
24-026208	11-101352	H
24-026239	11-115755	H
24-026246	11-115755	H
24-026970	11-181415	H
24-026987	11-181415	H
24-027007	11-103462	H
24-027243	11-181415	H
24-027250	11-181415	H
24-028004	11-115755	H
24-028011	11-115755	H
24-062596	11-101390	H
24-062596	11-103462	H
24-064095	11-115755	H
24-064101	11-115755	H
24-067577	11-181415	H
24-067898	11-106470	H
24-067904	11-106470	H
24-068659	11-181415	H
24-068666	11-181415	H
24-166652	12-167616	V
24-181495	11-101390	H
35-003663	11-101291	V
35-043911	11-101291	V

Motor sports-/individual suspensions

BILSTEIN®

Shock absorber name

Part Number

e.g.: V E 3 - 4178 F S L

- Top mounting/Type of fastening
- Lower mounting/Type of fastening
- Spring-supported shock absorber – McPherson strut
- Part number
- Working piston size
- System type
- Design

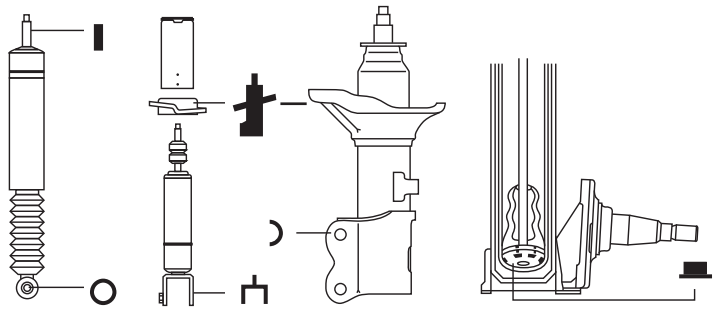

Design

- **B** Shock absorber
- **P** Cartridge
- **R** Repair insert
- **S** Sports kit
- **V** Front/rear axle strut

Systemart

- **E** Mono-tube system
- **M** Manually adjustable
- **N** Twin-tube system

Size

- **1** Ø 22 mm (B 22 -)
- **2** Ø 30 mm (P 30 -)
- **3** Ø 36 mm (V 36 -)
- **4** Ø 40 mm
- **5** Ø 46 mm (B 46 -)
- **6** Ø 60 mm (B 60 -)
- **7** Ø 32 mm (V 32 -)

Type of fastening

- **F** Spring-supported shock absorber / McPherson strut
- **S** Pin
- **A** Eye
- **G** Yoke
- **L** Clip
- **B** Base piece
- **Y** Stub axle
- **X** Special version

Notes

- **0)** Manufactured to order, not always in stock!
- **R)** Repair insert
- **7)** With spherical joints
- **38)** Damping force at 0,26 m/s or 0,39 m/s
- **40)** Thread M10
- **51)** With additional grooves
- **54)** On consignment
- **61)** With 50 mm chrome tube
- **79)** For the vehicles with front struts only
- **81)** Except mounting parts
- **129)** Incl. thread
- **132)** Except Caravan
- **133)** Not EVO
- **134)** Incl. Facelift 1997
- **135)** With damping force adjustment
- **137)** Ø 40
- **138)** Ø 41

Order instructions

All orders are accepted subject to our delivery and payment terms. All information is subject to change without prior notice.
Reproduction, in whole or in part, is not permitted without consent.

Modell / model	Typ / type	Variante / variant	Hinweis / note	Aufbau-art / body	2WD	4WD	Bau-jahr / year	Vorderachse/ front axle			Hinterachse/ rear axle		
								Material-No.	Aufh. / mounting	Hinweis / note	Material-No.	Aufh. / mounting	Hinweis / note
ALFA ROMEO													
Alfa 156	932	Rennen/ Race Gruppe N					09.97-	K4-BE5-60489T0		(400/ 150) , 129) , 0)	F4-VE3-4370-T0		(300/ 150) , 129) , 0)
GTA		Rennen						MDS-0062170	A S		MDS-0062171	S A	
ASTON MARTIN													
Vantage	GT 4	Rennen/ Race	2-Wege				ab 2012	MDS-0064760	A A		MDS-0064761	A A	
Vantage	N24 h	Rennen/ Race	2-Wege				2009-2011	MDS-0045208	S A		MDS-0045209	A S	
AUDI													
R8 LMS	"GT4"	Rennen/ Race	2-Wege				ab 2008	MDS-0042549	A A		MDS-0042550	A A	
RS4	Italien	Rennen/ Race	2-Wege				2007-2009	MDS-0028412	A G		MDS-0034157	A A	
RS4	VLN/ Italien	Rennen/ Race	2-Wege				2007-2009	MDS-0028412	A G		MDS-0028413	A A	
BMW													
1502 -2002 Ti		Rennen /Race Gr. I u. II					01.71-07.75	K4-VE3-63379M0	F S X	(220/ 120) , 0)	24-604277 (K4-BE5-60427T0)	S A	(180/ 120) , 0)
1502 -2002 Ti		Rennen /Race Gr. I u. II					01.71-07.75	K4-VE3-61826M0	F S X	(300/ 120) , 129) , 0)	24-604277 (K4-BE5-60427T0)	S A	(180/ 120) , 0)
2.8 - 3.0 CS/ CSI		Rennen/ Race Gr. I u. II		Coupé			68-08.76				K4-BE5-61413M0	S A	(300/ 120) , 0)
3er- Reihe	E30	Rennen / Race Gruppe N					09.82-06.91	34-046296 (K4-PE3-04629T0)	S B	(300/ 300) , 0)	24-000642 (F4-BE3-H821-M0)	S A	(200/ 200) , 0)
3er- Reihe	E30	Rennen / Race Gruppe N					09.82-06.91	K4-VE3-60922M0	F S X , original spindle required	(300/ 300) , 129) , 0)	24-000642 (F4-BE3-H821-M0)	S A	(200/ 200) , 0)
3er- Reihe	E30	Rennen /Race 325 Cup					09.82-06.91	K4-PE3-63459T0	S B	(300/ 300) , 0)	24-000642 (F4-BE3-H821-M0)	S A	(200/ 200) , 0)
3er- Reihe	E36	Rennen/ Race Gruppe N 320i, 323i, 325i	135)				91-5.92	K4-VM3-60206T0 L K4-VM3-60207T0 R	F S X	129) , 135) anti-roll bar bracket: series height	26-602059 (K4-BM5-60205T0)	S A	129) , 135) not for original top mount
3er- Reihe	E36	Außenteil/ strut housing	135)				91-5.92	K4-XRA-63392M0 L K4-XRA-63393M0 R		129) , 81) , 0) anti-roll bar bracket: for Nordschleife	26-602059 (K4-BM5-60205T0)	S A	129) , 135) , 0) not for original top mount
3er- Reihe/ M3	E30	Rallye					09.82-06.91	K4-PE3-64077M0	S B	(280/ 150) , 0)	K4-BE3-64131M0	S A	(260/ 120) , 0)
3er- Reihe/ M3	E36	Rennen/ Race Gruppe N 316i, 318i, 320i, 323i, 325i, 328i, M3					91-5.92	K4-VE3-64173M0 L K4-VE3-64175M0 R	F S X	(300/ 300) , 129) , 0)	K4-BE3-05551T9	S A	(200/ 200) , 0) Standard (250/ 280) , 0) (210/ 240) , 0)
3er- Reihe/ M3	E36	Rennen/ Race Gruppe N 316i, 318i, 320i, 323i, 325i, 328i, M3					91-5.92	K4-XDE-64172M0	F S X	(300/ 300) , 129) , 0)	K4-BE3-05551T9	S A	(200/ 200) , 0) Standard (250/ 280) , 0) (210/ 240) , 0)
3er- Reihe/ M3	E36	Rennen/ Race Gruppe N 316i, 318i, 320i, 323i, 325i, 328i, M3					91-5.92	K4-XDE-05778T9	F S X	(250/ 250) , 129) ,0) (300/ 200) , 129) ,0) (350/ 300) , 129) ,0) (350/ 200) , 129) ,0)	K4-BE3-05551T9	S A	(200/ 200) , 0) Standard (250/ 280) , 0) (210/ 240) , 0)
3er- Reihe/ M3	E36	Außenteil/ strut housing					91-5.92	K4-XRA-61172M0 L K4-XRA-61173M0 R		129) , 81) , 0) anti-roll bar bracket: series height			
3er- Reihe/ M3	E36	Außenteil/ strut housing					91-5.92	K4-XRA-63192M0 L K4-XRA-63193M0 R		129) , 81) , 0) anti-roll bar bracket: for Nordschleife			
Alpina B6	GT 3	Rennen/ Race	2-Wege	Coupe				MDS-0035930	F S B		MDS-0035940	S A	
E46	nur ETCC	Rennen/ Race	2-Wege					MDS-0047427	F S B		MDS-0048644	A A	
E46 Z4	VLN	Rennen/ Race, ohne Feder / mit Feder für ETCC E46	2-Wege					MDS-0041687	F S B		MDS-0048644	A A	
E46 Z4 E9X	außer ETCC	Rennen/ Race	2-Wege					MDS-0041687	F S B		MDS-0048644	A A	
E92 M3	GT 4	Rennen/ Race	2-Wege					MDS-0035602	F S B		MDS-130450AAA00	A A	
E9X	VLN	Rennen/ Race, ohne Feder	2-Wege					MDS-0041687	F S B		MDS-0046971	S S	

Modell / model	Typ / type	Variante / variant	Hinweis / note	Aufbau-art / body	2WD	4WD	Bau-jahr / year	Vorderachse/ front axle			Hinterachse/ rear axle		
								Material-No.	Aufh. / mounting	Hinweis / note	Material-No.	Aufh. / mounting	Hinweis / note
E9X M3	VLN	Rennen/ Race, ohne Feder	2-Wege					MDS-0035602	F S B		MDS-0035304	A A	
Formel Junior		Rennen/ Race					- 01	K4-BE5-60808T0	A A	0)	K4-BE5-60807T0	A A	0)
M1	VLN	Rennen/ Race	2-Wege					MDS-075340AAA00	A A		MDS-094465AAA00	A A	
M3	E254	Rennen/ Race Gruppe N					87-89	34-046296 (K4-PE3-04629T0)	S B	(300/ 300) , 0)	24-000642 (F4-BE3-H821-M0)	S A	(200/ 200) , 0)
M3	E254	Rennen/ Race Gruppe N					87-89	K4-VE3-61915M0	F S X , original spindle required	(300/ 300) , 0)	24-000642 (F4-BE3-H821-M0)	S A	(200/ 200) , 0)
Mini	VLN	Rennen/ Race	2-Wege					MDS-0065247	F S B		MDS-0065248	A S	
Z4	VLN (SP3)	Rennen/ Race	2-Wege					MDS-0051162	F S B		MDS-0051163	A A	
Z4 M Coupe		Rennen/ Race	2-Wege					MDS-0053354	F S B		MDS-0048644	A A	
CATERHAM													
Super Seven		Rennen/ Race						F4-B46-1899-M0	F A A	129) , 0)	F4-B46-1900-M0	F A A	129) , 0)
CITROEN													
AX GTI		Gruppe N							F S Y	Quick repair service; used part return required	F4-BE5-6021-M0	A A	(350/200) , 0) , 7) , 38)
AX / Saxo	ZA_	Rallye Asphalt/ Tarmac Grup-pe N					86-04	F4-P30-0351-H1	S B	(351/ 160) , 0)	24-012768 (F4-B46-1276-H2)	A A	0)
Saxo	S8 Cup	Rennen/ Race Cup					96-	K4-VE3-06084T0 L K4-VE3-06083T0 R		Quick repair service; used part return required	F4-BE5-2648-M1	A A	
Saxo	S8 Cup	Rennen/ Race Cup						F4-XDE-7830-M0 Innenteil/ insert		(200/ 138) , 0)	F4-BE5-2648-M1	A A	(860/ 240) , 0) , 7)
Saxo Chal-lenge		Rennen/ Race									F4-BE5-2515-M2	A A	0) , 7)
CORVETTE													
C6	"GT 4"	Rennen/ Race, (2-Wege/ 2-Way)	2-Wege					MDS-080350AAA02	A A		MDS-0043220	A G	
C6	"GT 4"	Rennen/ Race, (1-Wege/ 1-Way)						MDS-0041480	A A		MDS-0041481	A G	
C6R	GT 1	Rennen/ Race	2-Wege				bis 2009	MDS-0036439	AA		MDS-0036440	A G	
DALLARA													
F312	Formel 3	Rennen/ Race	2-Wege				ab 2012	MDS-0063330 & Aero-Daempfer MDS-0063331	A A		MDS-0063261 & Aero Dämpfer MDS-0063261	A A	
FERRARI													
F430	GT 2 (VLN)	Rennen/ Race	2-Wege					MDS-0034917	A A		MDS-0034918	A A	
F458	GT 2 LMS	Rennen/ Race	2-Wege					MDS-0055484	A A		MDS-0055485	A A	
F458	GT2 VLN & N24h	Rennen/ Race	2-Wege					MDS-0055486	A A		MDS-0055487	A A	
FIAT													
Cinquecento		Rallye Tarmac Cup Gruppe N						K4-VE3-05634T0	F S L	Quick repair service; used part return required			
Cinquecento		Rallye Gravel Cup Gruppe N						K4-VE3-05634T0	F S L	Quick repair service; used part return required			
Cinquecento		Cup/ Trofeo						K4-XDE-05634T9 Innenteil/ insert	S B	(400/ 150) , 0)	K4-BE3-05633T1	A A	(380/ 150) , 0)
Cinquecento		Cup						K4-XDE-05634T9 Innenteil/ insert	S B	(300/ 120) , 0)	K4-BE3-05633T9	A A	(280/ 80) , 0)
Cinquecento		Cup						K4-XDE-05634T9 Innenteil/ insert	S B	(320/ 140) , 0)	K4-BE3-05633T0	A A	(300/ 100) , 0)
Punto Kit Car		Rallye Gravel						K4-VE3-61827M9	F S L	Quick repair service; used part return required			
Punto Kit Car		Rallye Gravel						K4-XDE-61827M9 Innenteil/ insert		(300/ 150) , 0)	K4-BE5-61828M9	A A	(350/ 250) , 0) , 129)

Modell / model	Typ / type	Variante / variant	Hinweis / note	Aufbau-art / body	2WD	4WD	Bau-jahr / year	Vorderachse/ front axle			Hinterachse/ rear axle		
								Material-No.	Aufh. / mounting	Hinweis / note	Material-No.	Aufh. / mounting	Hinweis / note
Punto Kit Car		Rallye Asphalt/ Tarmac						K4-VE3-61709M9	F S L	Quick repair service; used part return required			
Punto Kit Car		Rallye Asphalt/ Tarmac	137)					K4-XDE-61962M9 Innenteil/ insert		(300/ 200) , 0)	K4-BE5-61711M9	A A	(350/ 250) , 0) , 129)
Punto		Rennen Grup-pe N						F4-VE3-5178-M0	F S L	Quick repair service; used part return required	K4-BE3-61921M0	A A	(500/ 180) , 0)
Punto		Rallye Gruppe N									K4-BE5-62290M0	A A	(500/ 200) , 0)
Seicento		Rallye						K4-VE3-05634T0	F S L	Quick repair service; used part return required	K4-BE3-05633T1	A A	(380/ 150) , 0)
Seicento		Rallye									K4-BE3-05633T9	A A	(280/ 80) , 0)
Seicento		Rallye									K4-BE3-05633T0	A A	(300/ 100) , 0)
FORD													
Focus	CTCC	Rennen/ Race	2-Wege					MDS-0060904	F S B		MDS-120540AAA00	A A	
GT	GT3	Rennen/ Race	2-Wege					MDS-0034907			MDS-0034908		
Escort Cosworth		Rallye Gravel Gruppe A					92-				24-024884 (F4-BE5-2488-H0)	S A	(350/ 130), 7), 129), 0)
Escort Cosworth		Rallye Gravel Gruppe A					92-				24-021890 (F4-B46-2189-H0)	S A	(350/ 130), 7), 129), 0) Aluminium
Escort II, RS 1600, RS 2000		Rallye Gravel Gruppe 4	only for Ral-lyecar				74-80				24-007672 (F4-B46-0767-H2)	S A	(230/110) , 0)
Escort II, RS 1600, RS 2000		Rallye					74-80				24-008716 (F4-B46-0871-H1)	S A	0)
Escort II, Sedan 1300 x 1600		Rallye					75-79				24-008716 (F4-B46-0871-H1)	S A	0)
Escort RS 1600, RS 2000		Rallye Asphalt Gruppe 4	only for Ral-lyecar				68-74				24-021906 (F4-B46-2190-H2)	F S A	(220/ 110), 7), 129), 0)
Escort RS 2000		Cup			2			K4-VE3-59444T0	S X	(330/ 270) , 129) , 0)	K4-BE5-60804T0	S A	(270/ 160) , 51) , 0)
Escort und Sierra Cosworth		Rennen/ Race Gruppe N				4		K4-VE3-05596T9	F S X	(320/ 250) , 129) , 0)	24-044578 (K4-BE3-04457T0)	A A	(275/160) , 0)
Escort und Sierra Cosworth		Rallye Tarmac Gruppe N				4		K4-VE3-05271M9	F S X	(325/ 150) , 129) , 0)	24-044578 (K4-BE3-04457T0)	A A	(275/160) , 0)
Escort und Sierra Cosworth		Rallye Gravel Gruppe N				4		K4-VE3-05220M9	F S X	(360/ 140) , 129) , 0)	K4-BE3-61830M0	A A	(230/ 125) , 0)
Fiesta XR2i		Cup					90-92	K4-V36-52509H0		0)	K4-B46-52510H0		0)
Puma		Rennen/ Race Cup					97-8/98	35-043898 (F4-VE3-4389-M0)	F S X	(230/ 100) , 129) , 0)	24-027113 (F4-BE5-2711-M0)	S G	(200/ 125) , 129) , 0)
Puma		Rennen/ Race Cup					9/98-	35-043898 (F4-VE3-4389-M0)	F S X	(230/ 100) , 129) , 0)	F4-BE5-9018-S0	S G	(200/ 125) , 129) , 0)
Sierra Cosworth		Rennen/ Race Gruppe N	RWD		2			K4-VE3-61323M0	F S X	(320/ 250) , 129) , 0)	24-044578 (K4-BE3-04457T0)	A A	(275/160) , 0)
Sierra Cosworth		Rallye Gruppe N	RWD		2			K4-VE3-62305M0	F S X	(300/ 125) , 129) , 0)	K4-BE3-61830M0	A A	(230/ 125) , 0)
Sierra Cosworth		Rallye Gravel Gruppe A				4	90-92				24-024884 (F4-BE5-2488-H0)	S A	(350/ 130), 7), 129), 0)
Sierra Cosworth		Rallye Gravel Gruppe A				4	90-92				24-021890 (F4-B46-2189-H0)	S A	(350/ 130), 7), 129), 0) Aluminium
FORMULA													
STUDENT		Rennen/ Race	2-Wege					MDS-0044118	A A		MDS-0044118	A A	
HYUNDAI													
Genesis	VLN & N24h	Rennen/ Race	2-Wege	Coupe			2011	MDS-0053737	F S B		MDS-120440AAA00	A A	
ISUZU													
Gemini 1600	PF50, PF60, incl. ZZR, ZZT	Rallye					6.75-85	24-008839 (F4-B46-0883-H0)	S A	0)	F4-B46-0918-H0	S A	0)

Modell / model	Typ / type	Variante / variant	Hinweis / note	Aufbau-art / body	2WD	4WD	Bau-jahr / year	Vorderachse/ front axle			Hinterachse/ rear axle		
								Material-No.	Aufh. / mounting	Hinweis / note	Material-No.	Aufh. / mounting	Hinweis / note
KTM													
X-Bow		Rennen/ Race	2-Wege					MDS-087440BAA00	A A		MDS-0053249	A A	
LADA													
Nova, Riva		Rallye Gruppe N					72-90	24-004473 (F4-B46-0447-H1)	S A	0)	F4-B46-0457-H1	A A	0)
LANCIA													
Delta EVO / HF		Rallye Gruppe A						K4-XDE-04564T0 Innenteil/ insert		61) , 0)	K4-XDE-04568T0 Innenteil/ insert		61) , 0)
Delta		Rallye Gruppe N	not EVO					MSP-04423		Quick repair service; used part return required	MSP-04424		Quick repair service; used part return required
Delta		Rallye Gruppe N	not EVO					MSP-04767		129) Quick repair service; used part return required	MSP-04768		129) Quick repair service; used part return required
Stratos		Monte Carlo (Rallye Tarmac)						K4-BE5-59352H0	A A	(170/ 55) , 0)	K4-PE3-60174T0	S B	(250/ 120) , 0)
LOTUS													
Elise/ Exige Mk2 Toyota	Tuner GP	Rennen/ Race	2-Wege					MDS-088349BAA00	A A		MDS-115426BAA00	A A	
MC LAREN													
MP4-12C	GT 3 / GrandAM	Rennen/ Race	2-Wege				ab 2011	MDS-0063612	A A		MDS-0063621	A A	
MERCEDES BENZ													
HWA SLS	GT 3 / VLN	Rennen/ Race	2-Wege					MDS-072388AAA00	A A		MDS-109547AAA00	A A	
MB	W123	Rallye 200-280E, 200D-300D, 230CE					01.76-12.85	24-005289 (F4-B36-0528-H0)	S A	0)	F4-B46-0538-H0	S A	0)
NISSAN													
370Z	GT 4 (VLN)	Rennen/ Race	2-Wege					MDS-099498AAA00	A A		MDS-0042631	A G	
GTR	GTR Cup	Rennen/ Race, Stahl Loesung mit Gabel	2-Wege					MDS-0044461 (links/left) & MDS-0044462 (rechts/ right)	S G		MDS-0044463	S G	
Micra Challenge	K11	Rallye					93-03	F4-XDE-7800-M0 Innenteil/ insert		(315/ 150) , 0)	F4-B46-2210-M0		(230/83) , 0)
OPEL													
Ascona	B	Rennen/ Race					10.75-81	24-000819	S A	(311/160) , 0)	24-000918	S A	(274/95) , 0)
Ascona	B	Rallye					10.75-81	24-008839 (F4-B46-0883-H1)	S A	(330/120), 0)	24-008938 (F4-B46-0893-H0)	S A	(220/78), 0)
Astra	F	Rallye			X		91-98	on request	cartridge	umstellen	24-024846 (F4-BE5-2484-H0)	S A	(210/ 090) , 7), 0)
Astra	G	Rallye Asphalt			X		98-05	on request	cartridge	270/120	on request	AA	180/125
Corsa / Tigra	A/ B	Rallye Gruppe N+G					83-00	35-041757 (F4-VE3-4175-T1)	F S L	(230/ 80) , 0)	F4-BE3-2391-H0	S A	(200/ 80) , 0)
Corsa / Tigra	A/ B	Rennen/ Race Gruppe N+G	incl facelift 1997				83-00	35-042136 (F4-VE3-4213-H0)	F S L	(230/ 80) , 0)	24-023900 (F4-BE3-2390-H0)	S A	(200/80) , 0)
Kadett	C GTE	Rallye Gruppe N	not City				73-79	24-009089 (F4-B46-0908-H1)	S A	(270/140), 0)	24-009188 (F4-B46-0918-H0)	S A	(195/58), 0)
Kadett	C	Rennen/ Race Gruppe N	not City				73-79	24-633369 (K4-BE5-63336M0)	S A	(320/ 160) , 0)	24-633376 (K4-BE5-63337M0)	S A	(195/90) , 0)
Kadett	D/ E	Rallye Cup					79-91	34-001462 (F4-P36-0146-H1)	S B	(250/ 080) , 79) , 0)	24-000925 (F4-B46-0092-H0)	S A	(160/ 050) , 7), 0)
Kadett	D/ E	Rallye					79-91	34-030721 (F4-P36-3072-H1)	S B	(270/ 120) , 79) , 0)	24-024846 (F4-BE5-2484-H0)	S A	(210/ 090) , 7), 0)
Kadett	D/ E	Rallye					79-91	F4-PE3-3081-T1	S B	(290/ 120) , 79) , 0)	F4-BE5-2370-T0	S A	(220/ 120) , 7), 0)
Kadett	D/ E	Rallye Asphalt Gruppe N+G Rennen/ Race					79-91	F4-PE3-3082-T1	S B	(310/ 140) , 79) , 0)	F4-BE5-2487-H0	S A	(240/ 140) , 7) , 0)
Manta	B	Rennen/ Race					10.75-88	F4-B46-0081-H0	S A	0)	F4-B46-0091-H0	S A	0)

Modell / model	Typ / type	Variante / variant	Hinweis / note	Aufbau-art / body	2WD	4WD	Bau-jahr / year	Vorderachse/ front axle			Hinterachse/ rear axle		
								Material-No.	Aufh. / mounting	Hinweis / note	Material-No.	Aufh. / mounting	Hinweis / note
Manta	B	Rallye					10.75-88	F4-B46-0883-H0	S A	0)	F4-B46-0893-H0	S A	0)
OSELLA													
PA 20S	Bergmeister.	Rennen/ Race	2-Wege					MDS-050285BAB01	A A		MDS-040275BAB00	A A	
PA 20S		Rennen/ Race	2-Wege					MDS-0030798	A A		MDS-0030798	A A	
PA 20S		Rennen/ Race	2-Wege					MDS-050285BAB00	A A		MDS-050285BAB00	A A	
PA 3		Rennen/ Race	2-Wege					MDS-0063673	A A		MDS-0063674	A A	
PEUGEOT													
106	I/ II	Rallye Gruppe N					91-	VE3-60809 L VE3-60809 R	S Y	(250/ 120) , 0) Quick repair service; used part return required			
106	I/ II	Rallye Gruppe N					91-	K4-XDE-60809T0 Innenteil/ insert		(250/ 120) , 0)	F4-B46-2220-T1	A A	(460/ 250) , 38), 0)
106	I/ II	Rallye Gruppe N					91-	34-003510 (F4-P30-0351-H1)	S B	(350/ 160) , 0)	24-012768 (F4-B46-1276-H2)	A A	(476/ 277) , 38), 0)
205	741A, C	Rennen/ Race Gruppe N					02.83-10.87	35-005476 R (F4-V36-0547-H1) 35-005483 L (F4-V36-0548-H1)	F S L	(260/ 120) , 0)	24-010382 (F4-B46-1038-H2)	A A	(248/157) ,38),0)
205	741A, C	Rennen/ Race Gruppe A					02.83-10.87	K4-VE3-62381M0 R K4-VE3-62380M0 L	F S L	(300/140) , 129) , 0)	F4-B46-2313-H0	A A	(350/200) ,38) ,0)
205	741A, C	Rallye Gruppe N					02.83-10.87	35-005476 R (F4-V36-0547-H1) 35-005483 L (F4-V36-0548-H1)	F S L	(260/ 120) , 0)	F4-B46-1038-H2	A A	(248/157) ,38),0)
309	10C, 10A	Rennen/ Race Gruppe N					10.85-12.89	35-005476 R (F4-V36-0547-H1) 35-005483 L (F4-V36-0548-H1)	F S L	(260/ 120) , 0)	F4-B46-1038-H2	A A	(248/157) ,38),0)
309	10C, 10A	Rennen/ Race Gruppe A					10.85-12.89	K4-VE3-62381M0 R K4-VE3-62380M0 L	F S L	(300/140) , 129) , 0)	F4-B46-2313-H0	A A	(350/200) ,38) , 0)
309	10C, 10A	Rallye Gruppe N					10.85-12.89	35-005476 R (F4-V36-0547-H1) 35-005483 L (F4-V36-0548-H1)	F S L	(260/ 120) , 0)	F4-B46-1038-H2	A A	(248/157) ,38),0)
PORSCHE													
356		Rennen/ Race						K4-BE5-59995T0	A A	(205/ 62) , 0)	K4-BE5-59996T0	S A	(258/ 98) , 0)
935		Rennen/ Race	2-Wege								MDS-0044369	A A	
962		Rennen/ Race	2-Wege					MDS-048278AAA00	A A		MDS-060310AAA00	A A	
993	GT 2	Rennen/ Race			2			K4-VR3-05927TL K4-VR3-05927TR	F S L	0) , 129) , 135)	K4-BR5-05928TL K4-BR5-05928TR	F S A	0) , 129) , 135)
993	GT 2	Rennen/ Race Nürburgring			2			K4-VR3-62047M0 L K4-VR3-62046M0 R	F S L	0) , 129) , 135)	K4-BR5-62048M0 L K4-BR5-62049M0 R	F S A	0) , 129) , 135)
997	GrandAm	Rennen/ Race	2-Wege				2010	MDS-0052794	F S B		MDS-0052817	S A	
997	GrandAm	Rennen/ Race	2-Wege				2012	MDS-0052794	F S B		MDS-0062307	S A	
997	GrandAm	Rennen/ Race	2-Wege				2007	MDS-0035751			MDS-0040900	S A	
997	GT 4	Rennen/ Race	2-Wege					MDS-0035751	F S B		MDS-0042584	S G	
911 Carrera, 930 Turbo, RSR		Rennen/ Race					72-90	K4-V36-58774H0 L K4-V36-58773H0 R	F S Y	(160/160) , 129)	24-595452	F S A	(180/170) , 129)
911 Carrera, 930 Turbo, RSR		Rennen/ Race					72-90				K4-BE5-61732M9	F S A	(220/ 180) , 0) , 129)
911 Carrera, 930 Turbo, RSR		Rennen/ Race					72-90	F4-RE3-H772-H0 Innenteil/ insert		(160/ 160) , 0)	24-009676 (F4-B46-0967-H2)	S A	(200/ 190) , 0)
911 Carrera, 930 Turbo, RSR		Rennen/ Race					72-90	F4-RE3-5049-H2 Innenteil/ insert		(200/ 170) , 0)			
911 Carrera, 930 Turbo, RSR		Rallye Asphalt/ Tarmac	Monte Carlo				72-90	K4-P36-51138H0 Innenteil/ insert		(220/ 50) , 0)	F4-B46-0180-H0	S A	(325/89) , 0)
911 Carrera, 930 Turbo, RSR		Rallye Gravel	1000-Seen				72-90	K4-RE3-61220M0 Innenteil/ insert		(270/ 100) , 0)	F4-B46-0973-H1	S A	(325/150) , 0)

Modell / model	Typ / type	Variante / variant	Hinweis / note	Aufbau-art / body	2WD	4WD	Bau-jahr / year	Vorderachse/ front axle			Hinterachse/ rear axle		
								Material-No.	Aufh. / mounting	Hinweis / note	Material-No.	Aufh. / mounting	Hinweis / note
930 Turbo		Rennen/ Race	2-Wege								MDS-0065232	A A	
944 Cup		Rennen/ Race Cup					87-89	35-593744 L 35-593751 R	F S L	(600/190) , 129)	24-176422	F A A	(565/218) , 129)
964 Cup		Rennen/ Race						K4-V36-59118H0 L K4-V36-59117H0 R	F S L	(220/ 70) , 0) , 129)	K4-BE5-04887T0	F S A	(380/ 170) , 0) , 129)
964 RSR	3,8l	Rennen/ Race						K4-VE3-05767TL K4-VE3-05767TR	F S L	(237/ 96) , 0) , 129)	K4-BE5-05760T1	F S A	(400/ 220) , 0) , 129)
964 RSR	3,8l	Rennen/ Race						K4-XDE-05767T0 Innenteil/ insert		(237/ 96) , 0)			
993 Super Cup ,95		Rennen/ Race					9.-95	K4-VE3-05816TL K4-VE3-05816TR	F S L	(110/ 60) , 38) , 0) , 129)	F4-BE5-2353-T3	F S A	(290/ 190) , 38) , 0) , 129)
993 Super Cup ,96		Rennen/ Race					96-	K4-VE3-06077T0 L K4-VE3-06078T0 R	F S L	(270/110) , 0) , 129)	F4-BE5-2353-T2	F S A	(300/ 200) , 38) , 0) , 129
996 GT3 Cup		Rennen/ Race Cup					ab 98	K4-VE3-61084M0	F S B	(185/ 99) , 38) , 0) , 129)	F4-BE5-2540-T1	F S A	(325/ 246) , 38) , 0) , 129)
996 GT3/ GT2	Straße/ Street	Clubsport 1-Wege		Coupe	2		ab 98	K4-VM3-63011M0	F S X	129) , 135)	K4-BM5-62464M0	F S A	129) , 135)
996 GT3R		Rennen/ Race					ab 98	F4-VR3-4601-T0	F S X	0) , 129) , 135)	F4-BR5-2973-T0	F S A	0) , 129) , 135)
997 Cup/ Cup S	VLN	Rennen/ Race, Alu Rohr, VLN Laenge	2-Wege					MDS-0045510	F S B		MDS-0035650	S A	
997 Cup/ Cup S	VLN	Rennen/ Race, Stahl Rohr, VLN Laenge	2-Wege					MDS-0035751	F S B		MDS-0035650	S A	
997 GT3 R	GP	Rennen/ Race, Stahl Rohr, GP Laenge	2-Wege				ab 2010	MDS-0040896	F S B		MDS-0046929	S A	
997 GT3 R	GP	Rennen/ Race, Alu Rohr, GP Laenge	2-Wege				ab 2010	MDS-0046192	F S B		MDS-0046929	S A	
997 GT3 R	VLN	Rennen/ Race, Alu Rohr, VLN Laenge	2-Wege					MDS-0045510	F S B		MDS-0046929	S A	
RSR	GP	Rennen/ Race, GP Laenge	2-Wege				09 bis 11	MDS-0046192	F S B		MDS-0042364	S A	
RSR/ Cup/ Cup S/ GT3 R	GP	Rennen/ Race, Stahl Rohr, GP Laenge	2-Wege				RSR bis08/ Cup bis 09	MDS-0040896	F S B		MDS-0046929	S A	
RSR/ Cup/ Cup S/ GT3 R	GP	Rennen/ Race, Alu Rohr, GP Laenge	2-Wege				RSR bis08/ Cup bis 09	MDS-0046192	F S B		MDS-0046929	S A	
RENAULT													
5	122	Rallye Gruppe N					72-85				24-009942 (F4-B36-0994-H0)	A A	(408/219) , 0)
Campus	Formel	Rennen/ Race						F4-BE5-2456-T0	F A A	7) , 129) , 0)	F4-BE5-2456-T0	F A A	7) , 129) , 0)
Clio	VLN	Rennen/ Race	2-Wege					MDS-0047025	S S		MDS-110430BAA00	A A	
Clio Cup ,96	Clio I	Rennen/ Race					90-98	F4-VE3-4162-T0 L F4-VE3-4163-T0 R	F S L	(359/250) , 0)	F4-B46-2221-T0	A A	(533/380) , 7) , 0)
Megane Cup ,97		Rennen/ Race						F4-VE3-4257-M0	F S L	(230/430) , 0) , 129)	F4-BE5-2454-T0	F A A	7) , 0) , 129)
Megane Cup ,97		Rennen/ Race						F4-XDE-7816-M0 Innenteil/ insert		0)			
R 405 R5 GT Turbo	Phase I	Rallye Gruppe N					5.84-6.87				24-009942 (F4-B36-0994-H0)	A A	(408/219) , 0)
R 405 R5 GT Turbo	Phase II	Rallye Gruppe N					7.87-90				24-009942 (F4-B36-0994-H0)	A A	(408/219) , 0)
R 5 Alpine/ Turbo		Rallye					-4.84	F4-B46-0981-H0	S A	(420/287) , 0)	F4-B46-0991-H0	S A	(317/146) , 0)
R 5 Alpine/ Turbo		Rennen/ Race Cup					-4.84	F4-B46-0980-W0	S A	(380/240) , 0)	F4-B46-0990-W1	S A	(275/98) , 0)
Sport Spider Cup		Rennen/ Race Cup						F4-B46-2160-M1	F S A	(180/100) , 7) , 129) , 0)	F4-B46-2161-M1	F S A	(600/330) , 7) , 129) , 0)
Super 5	B/C 40	Rallye Gruppe N					84-96				24-009942 (F4-B36-0994-H0)	A A	(408/219) , 0)
SAAB													
99 GL		Rallye					68-7.78	F4-B46-2293-H1	A A	(375/150) , 38) , 0)			

Modell / model	Typ / type	Variante / variant	Hinweis / note	Aufbau-art / body	2WD	4WD	Bau-jahr / year	Vorderachse/ front axle			Hinterachse/ rear axle		
								Material-No.	Aufh. / mounting	Hinweis / note	Material-No.	Aufh. / mounting	Hinweis / note
99 incl. Turbo		Rallye					8.78-84	F4-B46-2293-H1	A A	(375/150) , 38) , 0)	F4-B46-2294-H0	S A	0)
900 I incl. Turbo		Rallye					78-6.93				F4-B46-2294-H0	S A	0)
SEAT													
Ibiza	6K1	Rallye Cup Spanien Asphalt		Schräg-heck/ Hatch-back	2		93-99	K4-VE3-60209-T0	F S L	(220/ 200) , 129) , 0)	K4-BE5-60215T0	F S A	(160/ 650) , 129) , 0)
Ibiza	6K1	Rallye Cup Deutschland Gravel/ Asphalt		Schräg-heck/ Hatch-back	2		93-99	K4-VE3-60830T0	F S L	(220/ 200) , 129) , 0)	K4-BE5-60215T0	F S A	(160/ 650) , 129) , 0)
Ibiza	6K1	Rallye Asphalt/ Tarmac		Schräg-heck/ Hatch-back	2		93-99	F4-VE3-4160-T0	F S L	(250/ 150) , 0)			
Ibiza	6K1	Rallye Gruppe N Gravel		Schräg-heck/ Hatch-back	2		93-99	F4-VE3-4159-T0	F S L	(273/ 120) , 0)	B46-58896	F S A	(220/ 700) ,51) , 0)
Leon	Cup	Rennen/ Race	2-Wege					MDS-0042556	F S B		MDS-112473AAA00	A A	
Leon	Cup	Rennen/ Race, HA ohne Feder	2-Wege								MDS-100450AAA00	A A	
TOYOTA													
Celica	TE 70, 71, CE 70	Rallye					6.79-5.85				F4-B46-0154-H2	S A	0)
Yaris		Rennen/ Race Cup					99-05	F4-VE3-4991-M0	F S L	(200/200) , 129) , 0)	F4-BE5-6421-M0	S A	(260/140) , 7) , 0)
VAUXHALL													
Nova	A / B	Rallye Gruppe N+G					83-00	F4-VE3-4175-T1	F S L	(230/ 80) , 0)	F4-BE3-2391-H0	S A	(200/ 80) , 0)
Nova	A / B	Rennen/ Race Gruppe N+G					83-00,	F4-VE3-4213-H0	F S L	(230/ 80) , 0)	F4-BE3-2390-H0	S A	(200/80) , 0)
VOLKSWAGEN													
Golf	I	Rennen/ Race Gruppe N			2		75-85	F4-V36-0059-H0	F S L	(270/94) , 0) Quick repair service; used part return required	F4-B46-0834-H0	F S A	(200/ 73) , 51) , 0)
Golf	I	Rennen/ Race Gruppe N			2		75-85	F4-P30-0032-H0	S B	(250/73) , 0)	F4-B46-0834-H0	F S A	(200/ 73) , 51) , 0)
Golf	I	Rennen/ Race Gruppe A+H+II			2		75-85	K4-VE3-60320T0	F S L	(230/ 80) , 129) , 0) Quick repair service; used part return required	F4-B46-0653-H0	F S A	(200/ 73) , 7) , 129) , 0)
Golf	I	Rallye Gruppe N			2		75-85	F4-V36-0059-H0	F S L	(270/94) , 0) Quick repair service; used part return required	24-006576 (F4-B46-0657-H1)	F S A	(150/ 45) , 51) , 0)
Golf	II	Rallye Asphalt/ Tarmac Gruppe A	for stock rallye car only	Schräg-heck/ Hatchw-back	2		83-92				K4-BE5-60027T0	F A A	(200/ 120) , 51) , 0)
Golf	II	Rallye Gravel Gruppe A	for stock rallye car only	Schräg-heck/ Hatch-back	2		83-92				K4-BE5-63154M0	F A A	(220/ 90) , 51) , 0)
Golf	II / III	Rennen / Race Gruppe G		Schräg-heck/ Hatch-back	2		83-97	K4-VE3-59569T0	F S L	(300/120) , 0)	K4-BE3-59568T0	F S A	(300/100) , 0)
Golf	II / III	Rennen / Race Gruppe N+A		Schräg-heck/ Hatch-back	2		83-97	F4-VE3-4406-M1	F S L	(300/ 120) , 129) , 0)	F4-BE5-2738-M0	F S A	(300/ 120) , 7) , 129) , 0)
Golf	II / III	Rallye Gruppe N		Schräg-heck/ Hatch-back	2		83-97	35-001065 (F4-V36-0106-H1)	F S L	(243/ 93) , 0)	24-006552 (F4-B36-0655-H0)	F S A	(230/ 90) , 51) , 0)
Golf	II / III	Rallye Gravel Gruppe N+A		Schräg-heck/ Hatch-back	2		83-97	K4-VE3-04056T9	F S L	(230/ 90) , 129) , 0)	K4-BE5-61515M0	F S A	(220/ 90) , 7), 51) , 0)

Modell / model	Typ / type	Variante / variant	Hinweis / note	Aufbau-art / body	2WD	4WD	Bau-jahr / year	Vorderachse/ front axle			Hinterachse/ rear axle		
								Material-No.	Aufh. / mounting	Hinweis / note	Material-No.	Aufh. / mounting	Hinweis / note
Golf	II / III	Rallye Asphalt/ Tarmac Gruppe N+A		Schräg-heck/ Hatch-back	2		83-97	K4-VE3-60452T0	F S L	(230/ 145) , 129) , 0)	24-627009 (K4-BE5-62700M0)	F S A	(200/ 120) , 7), 51) , 0)
Jetta II	19E	Rallye Gruppe N					1.84-91	F4-V36-0106-H1	F S L	(243/ 93) , 0)	24-006552 (F4-B36-0655-H0)	F S A	(230/ 90) , 51) , 0)
Lupo Cup		Rennen /Race Cup		Schräg-heck Hatch-back	2			K4-VE3-60788T0	F S L	(200/200) , 129) , 0)	K4-BE3-60789T0	S A	(137/110) , 7) , 0)
New Beetle	9C	Cup		Schräg-heck Hatch-back	2			K4-VE3-61281M9	F S X	(250/ 250) , 0)	K4-BE5-61315M9	S A	(208/ 73) , 7) , 129) , 0)
Scirocco	53/ 53B	Rennen / Race Gruppe N		Coupe	2		74-89	F4-P30-0032-H0	S B	(250/73) , 0)	F4-B46-0834-H0	F S A	(200/ 73) , 51) , 0)
VOLVO													
240, 242, 244, 245, 262, 264, 265		Rallye					74-	F4-PE3-3083-H1	S B	(350/ 150) , 0)	F4-B46-2211-H0	A A	(275/ 200) , 0)
WARTBURG													
W353	2- Takt	Rallye						K4-BE3-61810M9	A A	(240/ 65) , 0)	K4-BE3-61811M9	A A	(320/ 55) , 0)
WESTFIELD													
S8		Rennen/ Race	2-Wege					MDS-065312BAC00	A A		MDS-080351BAC00	A A	
SPECIAL PARTS – BILSTEIN													
AIRJACK	Short version	ALUMINIUM						14-000669					
AIRJACK	Long version	ALUMINIUM						14-000652					
AIRJACK	Porsche	ALUMINIUM						F4-BE5-A583-T1 / F4-BE5-A583-T2					

Current certificates for download

All of the current certificates can be called up in the pdf format in the internet under http://katalog.bilstein.de.

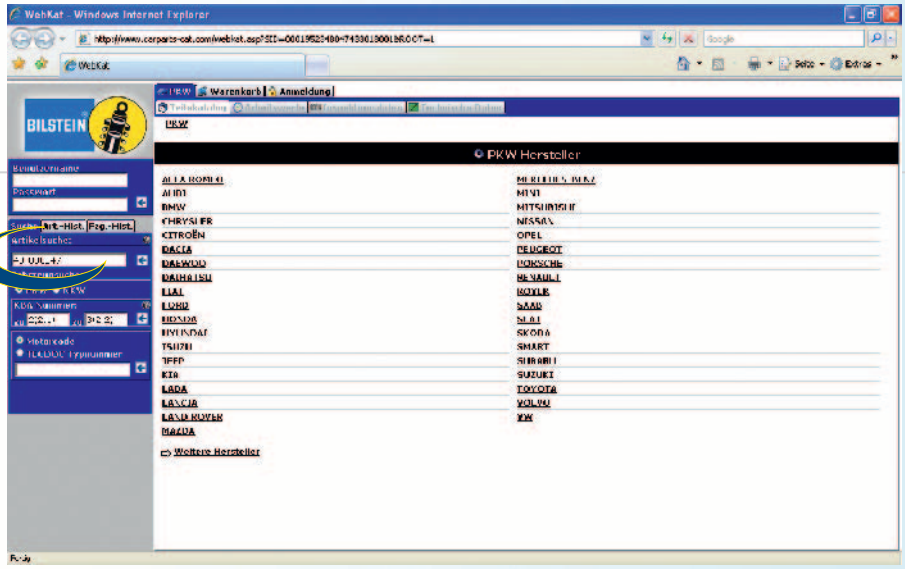

1. After loading the web page, insert the part number into the “look up box” eg. 48-080347.

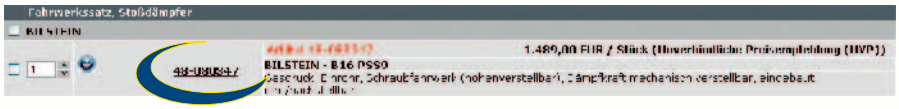

2. When the part number appears click on it.

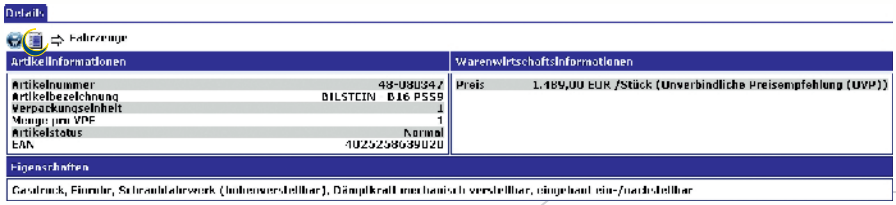

3. Select “certificate” and a PDF document will appear. Please note you will need to have Adobe Acrobat Reader® installed on your system to display the PDF.

Notes and explanations.

In cases of doubt please contact your local BILSTEIN dealer or our sales department before conversion.

BILSTEIN shock absorbers must always be replaced in pairs. The conversion requires special tools and expert knowledge. Therefore, converting your vehicle to BILSTEIN must be carried out by a specialist workshop. Use a chassis hoist for the fitting so that the raised vehicle cannot slip. If a chassis hoist is not available, you must ensure that the vehicle is blocked against any movement when it is raised. Under no circumstances should any work be completed underneath the vehicle if it is not adequately secured. Otherwise, there is a risk of extremely serious head injuries and contusions.

The application must be in accordance with the BILSTEIN type list, otherwise the proper function of the BILSTEIN gas pressure shock absorber is no longer guaranteed. The same goes for clamping a shock absorber in a vice or any similar tool.

Under no circumstances may this BILSTEIN gas pressure shock absorber be modified in any way, otherwise all warranty claims and the type homologation will be rendered invalid. The oil fill in a BILSTEIN gas pressure shock absorber is pretensioned with gas.

Opening or heating the shock absorber in contravention of this instruction can result in severe injuries to the hands and face. Do not use impact drivers for unscrewing and tightening the nuts, otherwise the fastening thread will be irreparably damaged.

Self-locking nuts are only allowed to be used once! Suspension springs are pretensioned! For safety reasons, the suspension spring must be pretensioned with the help of an appropriate spring tensioning device.The top mount is only to be removed when the spring is preloaded sufficiently so it can be moved by hand. Severe injuries to the head or upper body may occur if these warnings are disregarded.

All fixing mounts for struts must be tightened before the vehicle is let down to the ground. Ensure that the bump stop and dust cover are correctly and properly fastened.

Re-use any original equipment parts only if they are in good condition, otherwise replace them with new ones. Never remove the thin film of oil on the piston rod and seal. After the conversion, check and/or adjust the track and camber and, if necessary, the brake power control (load-dependent) and ABS sensors according to the manufacturer‘s data. Also check and adjust the headlight setting if necessary.

Observe the rules specified in the type list when disposing of old parts. If you have any questions about this, please contact our sales department or, for Germany only, PARTSLIFE Recycling System GmbH.

Company PARTSLIFE Recycling System GmbH & Co.KG,
Heinrich-Hertz-Str. 9, 63225 Langen
Tel. +49 (0)6103 / 20106-0, Fax: -19
www.partslife.de
info@partslife.de

General information BILSTEIN B10 – B16

It is essential to observe the instructions in the expert report and in the installation instructions for chassis before installation. When chassis have a parts report, correct installation of the parts must be confirmed by an expert (TÜV, DEKRA, motor vehicle expert). The specified lowering dimension depends on the engine and equipment of the vehicle, and cannot be guaranteed. The specified lowering data result from the parts report. In the case of threaded suspension systems, the lowest permitted spring collar position must be set for acceptance in accordance with section 19 of the German Road Traffic Regulations. Spring collar positions outside the standard adjustment range must be presented for repeat acceptance by the official body (e.g. TÜV) in accordance with section 21 of the German Road Traffic Regulations. The report must be used as the basis for checking whether, and for which, wheel/tyre combinations it is necessary to have spacer discs.
Special tools are not supplied!
Size 30 cartridge spanner order no.: MS 08/7 Size 36 cartridge spanner order no.: MS 08/6 Profi-Hakenschlüssel: EWK-9923, EWK-9924

Registering a complaint

The document for registering the complaint can be downloaded from our website at www.bilstein.com

Ordering instructions

All orders are accepted subject to our delivery and payment terms. All information is subject to change without prior notice.
Reproduction, in whole or in part, is not permitted without consent.

Disposal of used parts
BILSTEIN gas pressure shock absorbers

BILSTEIN mono-tube and twin-tube shock absorbers should not simply be thrown away.According to accident prevention and environment regulations, it is absolutely essential to depressurise the shock absorber and properly dispose of its content and its individual parts (danger of explosion when heating over 200 °C). Safety glasses according to DIN standard 58211 part 2 – as used when grinding – are to be worn in accordance with the following disposal procedures.

Disposal:

Illustrations 1-3:

BILSTEIN mono-tube gas pressure shock absorbers with a piston rod diameter of 8-14 mm (remove mounting parts,protective tube or dirt shield) are to be fixed on a suitable base,e.g. in a prism and centre marked at the 3 points to be drilled according to drawing no. 1. First of all,holes are to be drilled in the shock absorber close to the shock absorber base (c) with a 5 mm drill bit so that the hydrogen gas (pressure up to 25 bar) can escape.Two holes are now to be drilled at distance (d) in order to enable oil drainage. Proceed in the same manner when dismantling BILSTEIN mono-tube struts according to drawing no. 2. First of all remove the outer tube. Saw off the tube above the mount (a) (fixture,axle stub,clip) but not the piston rod. Remove burrs from the separated parts. Remove tube by pulling it over the chrome-plated tube. Proceed in the same manner with BILSTEIN cartridge inserts according to drawing no. 3. First of all remove outer tube. Grip the tube at point (b), turn (stud pointing downwards) and knock heavily against a hard base until the tube falls out of the tube bottom. Remove tube by pulling it over the chromeplated tube.The details listed in the drawings are to be strictly adhered to.

Illustration 4:

BILSTEIN twin-tube gas pressure shock absorbers with a piston rod diameter of 20-24 mm (remove mounting parts,protective tube and dirt shield) are to be fixed on a suitable base,e g. in a prism and centre marked at the 2 points to be drilled according to drawing no. 4. First of all drill a hole in the shock absorber close to the piston rod seal with a 5 mm drill bit so that the hydrogen gas can escape (e), then drill a 15 mm deep hole at the point stated (f) (80 mm from bottom of the tube with the piston rod in the extended position) in order to enable oil drainage. By repeated movement of the piston rod the oil is pumped out of the damper tube and collected in an appropriate container. The shock absorber oil,free from PCB and PCT,is to be disposed of in accordance with national waste disposal laws (same regulations apply to motor oil).After the shock absorbers have been depressurised and the oil drained off,shock absorber struts,cartridge inserts and their individual parts – still partly covered with oil and grease – must also be disposed of in accordance with the national waste disposal law.This information has been provided in good faith,subject to the applicable regulations.We cannot accept liability for each individual circumstance. If in doubt,please contact the Sales Consulting department of ThyssenKrupp Bilstein GmbH or the Company PARTSLIFE Recycling System GmbH & Co.KG

Heinrich-Hertz-Str. 9, 63225 Langen

Tel. +49 (0)6103/20106-0, Fax: -19

www.partslife.de

info@partslife.de

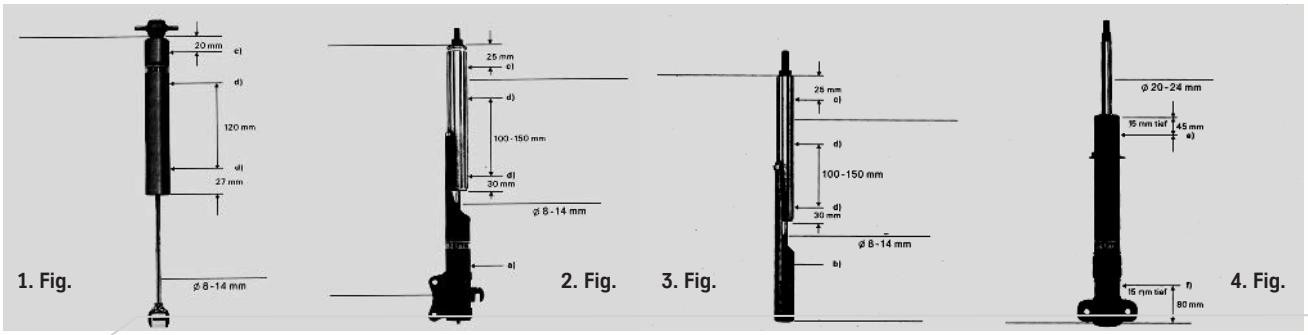

1. Fig. 2. Fig. 3. Fig. 4. Fig.

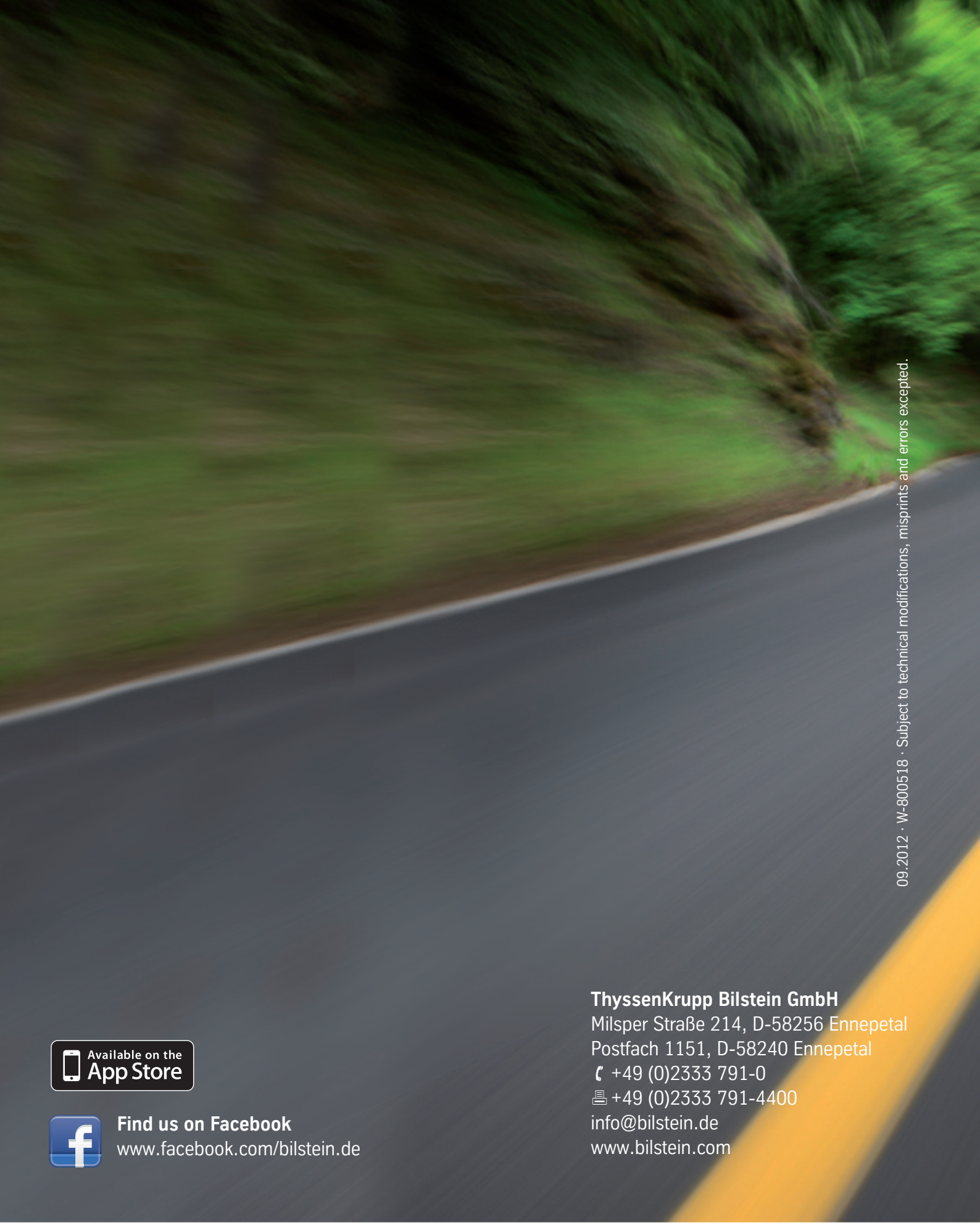

09.2012 · W-800518 · Subject to technical modifications, misprints and errors excepted.

Available on the App Store

Find us on Facebook
www.facebook.com/bilstein.de

ThyssenKrupp Bilstein GmbH
Milsper Straße 214, D-58256 Ennepetal
Postfach 1151, D-58240 Ennepetal
+49 (0)2333 791-0
+49 (0)2333 791-4400
info@bilstein.de
www.bilstein.com

BILSTEIN®